Cheyenne

Courtesy of Bomar Flying Service
www.bomar.biz

AIRPLANE

SERVICE MANUAL

CARD 1 OF 8

PA-31T CHEYENNE

PA-31T CHEYENNE II

PA-31T1 CHEYENNE I

PA-31T1 CHEYENNE IA

PA-31T2 CHEYENNE II XL

PIPER AIRCRAFT CORPORATION

PART NUMBER 753 826

1A1

JULY 2, 1984
INTERIM REVISION: OCTOBER 15, 1997

SERIAL NUMBER INFORMATION

PA-31T, CHEYENNE

Serial Numbers 31T-7400002 to 31T-7720069 inclusive.

PA-31T, CHEYENNE II

Serial Numbers 31T-7820001 to 31T-8120104 inclusive.

PA-31T1, CHEYENNE I

Serial Numbers 31T-7804001 to 31T-8104101 inclusive.

PA-31T1, CHEYENNE IA

Serial Numbers 31T-8304001 to 31T-8304003 inclusive;
(then, serial number series changed to)
Serial Numbers 31T-1104004 to 1104017 inclusive.

PA-31T2, CHEYENNE II XL

Serial Numbers 31T-8166001 to 31T-8166076 inclusive;
(then, serial number series changed to)
Serial Numbers 31T-1166001 to 1166008 inclusive.

AEROFICHE EXPLANATION AND REVISION STATUS

Service manual information incorporated in this set of Aerofiche cards has been arranged in accordance with general specifications of Aerofiche adopted by General Aviation Manufacturer's Association, (GAMA).

Information compiled in this Aerofiche Service Manual will be kept current by revisions distributed periodically. These revisions supersede all previous revisions and are complete Aerofiche card replacements and supersede Aerofiche cards of same number in set.

Conversion of Aerofiche alpha/numeric code numbers:
First number is Aerofiche card number.
Letter is horizontal line reference per card.
Second number is vertical line reference per card.
Example: 2J16 Aerofiche card number two of given set, Grid location J16.

To aid in locating the various chapters and related service information desired, the following is provided:

1. At the beginning of Aerofiche Card No. 1:
   a. A complete Section Index for all fiche in this set.
   b. A complete list of Illustrations for all fiche in this set.
   c. A complete list of Tables for all fiche in this set.
   d. A complete list of Charts for all fiche in this set.
2. At the beginning of each subsequent Aerofiche Card:
   a. A complete Section Index for all fiche in this set.
   b. A complete list of Illustrations for that fiche only.
   c. A complete list of Tables for that fiche only.
   d. A complete list of Charts for that fiche only.
3. A complete Table of Contents showing paragraph titles and appropriate grid location numbers is given at the beginning of each Section relating to the information within that Section.
4. Identification of revised material:

   Revised text and illustrations are indicated by a black vertical line along the left-hand margin of the frame, opposite revised, added or deleted material. Revision lines indicate only current revisions with changes and additions to or deletions of existing text and illustrations. Changes in capitalization, spelling, punctuation, indexing, physical location of material, or complete page additions are not identified by revision lines.

AEROFICHE EXPLANATION AND REVISION STATUS (cont)

5. Revisions to Service Manual 753 826 issued December 1973 are as follows:

Revision	Publication Date	Aerofiche Card Effectivity
ORG731208	December 8, 1973	
CR810206	February 6, 1981	1, 2, 3, 4, 5, 6, 7 and 8
PR810923	September 23, 1981	1, 2, 3, 4, 5, 6, 7 and 8
PR810925	September 25, 1981	1 Only
PR820215	February 15, 1982	1, 2, 3, 4, 5, 6, 7 and 8
PR821015	October 15, 1982	1, 2, 3, 4, 5, 6, 7 and 8
PR830425	April 25, 1983	1, 2, 3, 4, 5, 6, 7 and 8
PR840105	January 5, 1984	1, 2, 3, 4, 5, 6, 7 and 8
PR840323	March 23, 1984	1, 2, 3, 4, 5, 6, 7 and 8
PR840702	July 2, 1984	1, 2, 3, 4, 5, 6, 7 and 8
IR860220	February 20, 1986	3
IR860430	April 30, 1986	3
IR860821	August 21, 1986	1
IR871009	June 15, 1988	2
IR900313	March 13, 1990	1
IR941019	October 19, 1994	1 and 2
IR950320	March 20, 1995	1
IR971015 *	October 15, 1997	1, 2, 3, 4, 5, 6, 7 and 8

*** INTERIM REVISION TO SERVICE MANUAL 753-826**

Revisions appear in all eight Aerofiche cards. Discard your entire existing Aerofiche card set (Cards 1 - 8) and replace it with the revised Aerofiche card set (Cards 1 - 8) dated 10/15/97.

Consult the Customer Service Information Catalog Aerofiche (P/N 1753-755) for current revision dates for this manual.

SECTION INDEX

SECTION	AEROFICHE CARD NO. 1	GRID NO.
I	INTRODUCTION	1A19
II	HANDLING AND SERVICING	1A22
III	INSPECTION	1D23
IV	STRUCTURES	1E13
V	SURFACE CONTROLS	1I8
	AEROFICHE CARD NO. 2	
VI	HYDRAULIC SYSTEM	2A10
VII	LANDING GEAR AND BRAKE SYSTEM	2D19
VIII	POWER PLANT (PA-31T AND PA-31T1)	2I11
	AEROFICHE CARD NO. 3	
VIIIA	POWER PLANT (PA-31T2)	3A8
IX	FUEL SYSTEM	3D7
X	INSTRUMENTS	3F2
	AEROFICHE CARD NO. 4	
XI	ELECTRICAL SYSTEM	4A7
	AEROFICHE CARD NO. 5	
XII	ELECTRONICS	5A9
XIII	ENVIRONMENTAL CONTROL SYSTEM (PA-31T AND PA-31T1)	5B1
	AEROFICHE CARD NO. 6	
XIIIA	ENVIRONMENTAL CONTROL SYSTEM (PA-31T2)	6A8
XIV	ACCESSORIES AND UTILITIES	6C1
	AEROFICHE CARD NO. 7	
XV	ELECTRICAL SCHEMATICS (PA-31T AND PA-31T1)	7A5
	AEROFICHE CARD NO. 8	
XVA	ELECTRICAL SCHEMATICS (PA-31T2)	8A5

LIST OF ILLUSTRATIONS

Figure		Aerofiche Grid No.
2-1.	Three View of the Piper Cheyenne (PA-31T and PA-31T1)	1B1
2-2.	Three View of the Piper Cheyenne (PA-31T2)	1B2
2-3.	Station Reference Lines	1B3
2-4.	Access Plates and Panels, Fuselage, Interior, Fuselage and Empennage (PA-31T and PA-31T1)	1B6
2-5.	Access Plates and Panels, Fuselage Interior, Fuselage and Empennage (PA-31T2)	1B8
2-6.	Access Plates and Panels, Wings	1B10
2-7.	Jacking Configuration (Typical)	1B14
2-8.	Weighing Configuration (Typical)	1B19
2-9.	Leveling Longitudinally and Laterally	1B20
2-10.	Tow Turn Limits and Radius	1B22
2-11.	Service Points	1B24
2-12.	Servicing Landing Gear Shock Struts	1C4
2-12a.	Tire Balancer	1C7
2-12b.	Aircraft Lubrication Charts	1C14
2-13.	Fabricated Jack Stand for Piper Jack, Part No. 18338-0	1D9
2-14.	Fabricated Tail Stand	1D10
2-15.	Protective Closures Installation	1D11
2-16.	Special Tools	1D16
3-1.	Wing Flap Transmission Inspection	1E2
3-2.	Wing Flap Actuator Cable	1E3
3-3.	Friction Reduction in Wing Flap System	1E6
3-4.	Wing Flap Motor	1E8
3-5.	Inspection of Aileron Sprocket and Chain	1E9
3-6.	V-Band Coupling Lock Wire	1E10
4-1.	Aileron and Flap Installation	1E18
4-2.	Methods of Blocking Trim Cables	1E21
4-3.	Fuselage Cradle (Typical)	1E24
4-4.	Wing Installation	1F2
4-5.	Empennage Installation	1F5
4-6.	Windshield Installation (Earlier Models)	1F16
4-6a.	Heated Windshield (Earlier Models)	1F17
4-7.	Windshield Installation (Later Models)	1F18
4-7a.	Heated Windshield (Later Models)	1F20
4-8.	Windshield Wiper (PA-31T, PA-31T1)	1F21
4-8a.	Windshield Wiper (PA-31T2)	1F23
4-9.	Emergency Exit and Eyebrow Window	1F24
4-9a.	Storm Window Installation	1G3
4-10.	Cabin Entrance Door	1G7
4-11.	Cargo Door Installation	1G12
4-12.	Checking Aileron Balance	1G19
4-13.	Checking Elevator Balance	1G19
4-14.	Elevator Balance Weight Modification	1G20
4-15.	Checking Rudder Balance	1G20
4-16.	Elevator Friction Measurement	1H1
4-17.	Skin Thickness	1H3

LIST OF ILLUSTRATIONS (cont.)

Figure		Aerofiche Grid No.
4-18.	Typical Access Holes and Panels	1H6
4-19.	Fuselage Sealing (Forward)	1H8
4-20.	Fuselage Sealing (Aft)	1H9
4-21.	Faying Surface Seal	1H12
4-22.	Joggle Seal	1H12
4-23.	Holes and Voids Seal	1H13
4-24.	Fillet Seal	1H13
4-25.	Bolts and Rivets Seals	1H14
4-26.	Wire Harness Seals	1H15
4-27.	Floorboard Seals	1H16
4-28.	Fabricated Tools	1H18
4-29.	Door Snubber Assembly	1H23
4-30.	Erosion Shoe Installation	1I7
5-1.	Control Column Installation	1I15
5-2.	Correct Method of Installing Rod End Bearings	1I18
5-3.	Rigging Bobweight	1I19
5-4.	Aileron and Aileron Trim Controls	1I23
5-5.	Installation of Bellcrank Rigging Tool	1J3
5-6.	Installation of Aileron Rigging Tool	1J3
5-7.	Elevator and Elevator Trim Controls	1J5
5-8.	Installation of Elevator Rigging Tool	1J10
5-9.	Elevator Travel Stops	1J10
5-10.	Safety Wiring	1J10
5-11.	Methods of Blocking Trim Cables	1J11
5-12.	Rudder and Rudder Trim Controls	1J16
5-13.	Installation of Rudder Rigging Tool	1J19
5-14.	Installation of Rudder Trim Rigging Tool	1J19
5-15.	Rudder Pedal Installation	1J24
5-16.	Clamping Rudder Pedals	1K1
5-17.	Rigging of Rudder Pedals	1K1
5-18.	Trim Controls Installation	1K2
5-19.	Trim Screw Assembly	1K4
5-20.	Flap Controls (Piper System)	1K6
5-21.	Flap Selector Switch (Piper System)	1K10
5-22.	Flap System Diagram (Calco)	1K12
5-23.	Motor Assembly, Exploded View (Calco)	1K14
5-24.	Flap Controls (Calco)	1K17
5-25.	Flap Rigging Adjustments (Calco)	1K21
5-26.	Amplifier-Electrical Schematic (Calco)	1K23
5-27.	Fabricated Aileron-Elevator Rigging Tool	1L2
5-28.	Fabricated Bellcrank Rigging Tool	1L3
5-29.	Fabricated Rudder Rigging Tool	1L4
5-30.	Fabricated Rudder Trim Tab Rigging Tool	1L5
5-App-1.	Control Cable Inspection Technique	1L19
5-App-2.	Cable Wear Pattern	1L20
5-App-3.	Internal Cable Wear	1L20
5-App-4.	Pulley Wear Patterns	1L22

LIST OF ILLUSTRATIONS (cont.)

Figure		Aerofiche Grid No.
6-1.	Schematic Diagram of Hydraulic System With Gear Door Actuators	2A16
6-1a.	Schematic Diagram of Hydraulic System Without Gear Door Actuators	2A17
6-2.	Schematic of Power Pack Electrical System	2A18
6-3.	Power Pack Installation	2B2
6-4.	Location of Power Pack Components (Ozone)	2B3
6-5.	Hydraulic Power Pack (Ozone)	2B5
6-6.	Power Pack Manifold (Ozone)	2B9
6-7.	Power Pack Handle-Release (Ozone)	2B13
6-8.	Safetying Control Arms (Ozone)	2B13
6-9.	Timing of Selector Spool (Ozone)	2B15
6-10.	Handle-Release Adjustment (Ozone)	2B16
6-11.	Location of Power Pack Components (Wiebel Tool)	2B20
6-12.	Hydraulic Power Pack (Wiebel Tool)	2B21
6-13.	Power Pack Manifold (Wiebel Tool)	2B24
6-14.	Power Pack Handle-Release Mechanism (Wiebel Tool)	2C2
6-15.	Safetying Control Arm (Wiebel Tool)	2C5
6-16.	Indexing of Selector Spool (Wiebel Tool)	2C6
6-17.	Handle-Release Adjustment (Wiebel Tool)	2C8
6-18.	Hydraulic System Schematic	2C10
6-19.	Hand Pump (Ozone)	2C13
6-20.	Hand Pump (Wiebel Tool)	2C16
6-21.	Nose Gear Actuating Cylinder (Ozone OAS 2923-3)	2C18
6-22.	Nose Gear or Main Actuating Cylinder (Wiebel Tool WTC 2115-1, WTC 2235-1 and WTC 2236-1)	2C20
6-23.	Main Gear Actuating Cylinder (Ozone OAS 5107-1)	2C23
6-24.	Main Gear Actuating Cylinder (Wiebel Tool WTC 2145-1 and WTC 2145-3)	2D1
6-25.	Gear Door Actuating Cylinder (Ozone OAS 2924-3)	2D2
6-26.	Gear Door Actuating Cylinder (Wiebel Tool, WTC 2114-1)	2D5
6-26a.	Gear Door Actuating Cylinder (Wiebel Tool, WTC 2218-1)	2D8
6-27.	Hydraulic Filter	2D10
6-28.	Hydraulic Pump	2D11
6-29.	Power Pack Test Harness Schematic	2D15
7-1.	Nose Gear Oleo Strut Assembly	2E1
7-1a.	Installation of T-Rings	2E4
7-2.	Nose Landing Gear Installation	2E6
7-3.	Clamping Rudder Pedals in Neutral Position	2E14
7-4.	Rudder Pedals Neutral Angle	2E14
7-5.	Aligning Nose Gear	2E16
7-6.	Nose Gear Steering Installation	2E19
7-7.	Main Gear Oleo Strut Assembly	2E22
7-8.	Main Landing Gear Installation	2E24
7-8a.	Aligning Main Gear	2F7
7-9.	Inboard Main Gear Door Hinge	2F9
7-9a.	Test Equipment Installation, Emergency Gear Extension System	2F12

LIST OF ILLUSTRATIONS (cont.)

Figure		Aerofiche Grid No.
7-9b.	Fabricated Test Fitting, Emergency Gear Extension System	2F13
7-9c.	Landing Gear Actuating System (PA-31T2)	2F14
7-10.	Adjusting Main Gear Down Limit Switch	2F17
7-11.	Gear Warning Switches Installation	2F20
7-12.	Nose Wheel Assembly (B.F. Goodrich 3-1331)	2F22
7-13.	Nose Wheel Assembly (B.F. Goodrich 3-1076)	2F24
7-14.	Main Wheel Assembly (Goodyear 9544171-1)	2G2
7-15.	Main Wheel Assembly (Cleveland 40-106 and 40-106A)	2G7
7-16.	B.F. Goodrich Main Wheel Installation (3-1392 and 3-1424)	2G9
7-17.	B.F. Goodrich Wheel Repair Limits (3-1392 and 3-1424)	2G12
7-18.	Wheel Brake Assembly (Goodyear 5002376)	2G17
7-19.	Rivet Head Grinding Limits (Goodyear 5002376)	2G19
7-20.	Fabricated Rivet Tools (Goodyear 5002376)	2G20
7-21.	Snow Shield Modification (Goodyear 5002376)	2G21
7-22.	Wear Pad-Wear Limits (Goodyear 5002376)	2G22
7-23.	Limits for Repadded Pressure and Back Plates (Goodyear 5002376)	2G22
7-24.	Brake Disc Visual Check for Serviceable Limits (Goodyear 5002376)	2G24
7-25.	Removal and Installation of Anchor Bolts	2H6
7-26.	Wheel Brake Assembly (Cleveland 30-106)	2H8
7-27.	B.F. Goodrich 2-1435-2 Brake Installation	2H10
7-27a.	Brake Removal Wear Limit	2H11
7-27b.	Brake Removal Wear Limit	2H11
7-28.	Brake Master Cylinder Assembly	2H20
7-29.	Parking Brake Valve Assembly	2H20
7-30.	Fabricated Tool, Nose Gear Gauge Link Travel	2H21
7-31.	Fabricated Tool, Main Gear Side Brace Link Travel	2H22
7-32.	Fabricated Tool, Main Gear Toe-in Adjustment	2H23
7-33.	Nose Gear Wear Limits	2I4
7-34.	Main Gear Wear Limits	2I7
8-1.	Engine Cowling	2I16
8-2.	Engine Air Inlet Ice Protection System	2I20
8-2a.	Air Inlet Ice Protection System (S/N 31T-8304001 and up)	2I21
8-2b.	Special Equipment for Rigging Inertial Separator Doors (S/N 31T-8304001 and up)	2I22
8-3.	Oil Cooler Door Installation	2I23
8-4.	Propeller Installation	2J2
8-5.	Typical Nicks and Removal Method	2J3
8-6.	Engine Installation (Typical)	2J9
8-7.	Throttle Control Cable Handling Procedure	2J13
8-8.	Engine Controls	2J15
8-9.	Low Pitch Stop Switch Adjustment	2J22
8-10.	Minor Torque Adjustment	2K3
8-11.	Running Adjustment Settings	2K6

LIST OF ILLUSTRATIONS (cont.)

Figure		Aerofiche Grid No.
8-11a.	Fuel Nozzle Adapter Inspection	2K24
8-12.	Fuel Manifold Test Rig	2L2
8-13.	Oil Filter Element	2L6
8-14.	Torque System Calibration	2L9
8-15.	Cheyenne IA Torquemeter Test Setup	2L12
8-16.	Cheyenne IA Torquemeter Transducer Test Setup	2L13
8-17.	T5 Thermocouple Harness Loop Resistance Check	2L15
8-18.	T5 Harness Insulation Resistance Check	2L15
8-19.	Inter-Turbine Temperature Calibration Check	2L16
8A-1.	Engine Cowling	3A13
8A-2.	Engine Air Inlet Ice Protection System	3A15
8A-3.	Oil Cooler Door Installation	3A16
8A-4.	Propeller Installation	3A19
8A-5.	Typical Nicks and Removal Method	3A20
8A-6.	Engine Installation (Typical)	3B3
8A-7.	Throttle Control Cable Handling Procedure	3B7
8A-8.	Engine Controls	3B10
8A-9.	Low Pitch Stop Switch Adjustment	3B16
8A-10.	Minor Torque Adjustment	3B21
8A-11.	Running Adjustment Settings	3B24
8A-11a.	Fuel Nozzle Adapter Inspection	3C12
8A-12.	Fuel Manifold Test Rig	3C15
8A-13.	Oil Filter Element	3C19
8A-14.	Digital/Analog Torque Calibration	3C21
8A-15.	T5 Thermocouple Harness Loop Resistance Check	3C24
8A-16.	T5 Harness Insulation Resistance Check	3C24
8A-17.	Inter-Turbine Temperature Calibration Check	3D1
9-1.	Fuel System Schematic (PA-31T and PA-31T2)	3D10
9-2.	Fuel System Schematic (PA-31T1 Only)	3D12
9-3.	Tip Tank Installation	3D13
9-4.	Fuel Cell Installation Inboard	3D15
9-4a.	Fuel Cell Attaching Hardware	3D16
9-5.	Fuel Cell Installation Outboard	3D18
9-6.	Fuel Valve Drain Plate	3D20
9-7.	Crossfeed Valve	3E4
9-8.	Fuel Shutoff Valve	3E4
9-9.	Fuel Filter	3E6
9-10.	Submerged Fuel Boost Pump	3E8
9-11.	Fuel System Installation	3E11
9-12.	Fuel Cell Tie Detail	3E12
9-13.	Fabrication of Test Fixture for Tank Unit Testing	3E17
9-14.	Test Equipment Hookup	3E18
9-15.	Test Cables for Tank Unit Testing (For TF-20, Only)	3E20

LIST OF ILLUSTRATIONS (cont.)

Figure		Aerofiche Grid No.
9-16.	Alternate Indicator Bench Test Hookup	3E20
9-16a.	Fuel Gauge Adjustment	3E21
9-17.	Fuel Vent System	3F1
10-1.	Instrument Panel Installation (Typical)	3F7
10-2.	Pitot-Static Installation	3F8
10-3.	Instrument Air System Installation.	3F9
10-4.	Turn and Bank Vacuum System	3F15
11-1.	Switch and Circuit Breaker Panels	4A16
11-2.	Exploded View of D.C. Starter-Generator	4A19
11-3.	Correct Position of Brushes and Springs	4B1
11-4.	Electrical Connections of Starter-Generator	4B1
11-5.	Paralleling Voltage Chart	4B2
11-5a.	Position of Auxilec Tool for Blowing Out Carbon Dust From Auxilec Starter-Generator	4B8
11-6.	Starter-Generator (Auxilec, Inc.)	4B12
11-7.	Brush Shunts Positioning	4B13
11-8.	Dimension Check of Shaft Drive Sinking	4B14
11-9.	Locating Washer	4B14
11-10.	Locating Drive Shaft	4B14
11-11.	Brush Running in Diagram	4B16
11-l la.	Autostart Electrical Float Diagram	4B22
11-12.	Cell Layout-Nickel Cadmium Battery	4C5
11-13.	Patch Harness	4C8
11-14.	Wiring Diagram Pre-Closed Loop Test	4C9
11-15.	Wiring Diagram Automatic Line Contactor Test	4C9
11-15a.	Electro Delta Wiring Diagram	4C11
11-16.	Wiring Diagram Test of Overvoltage Relay	4C15
11-17.	Landing and Taxi Lights	4C15
11-18.	Wing Inspection Light	4C21
11-18a.	Logo Light Assembly Adjustments	4D3
11-19.	Door-Ajar Switch	4D4
11-20.	Stability Augmentation System Layout Diagram	4D13
11-21.	S.A.S. Servo Motor	4D17
11-22.	S.A.S. Computer	4D19
11-23.	S.A.S. Angle of Attack Vane with Check Equipment Installed	4D22
11-24.	S.A.S. Stall Warning Margin Indicator	4D23
11-25.	S.A.S. Stability Augmentator Emergency Override System	4E5
11-25a.	A.O.A. Sensor Schematic	4E9
11-26.	Wing Flap Switch	4E18
11-27.	Safety Switch Function	4E18
11-28.	Basic Aircraft Electrical Bus Systems (Early Models) (Typical)	4E20
11-29.	Basic Aircraft Electrical Bus Systems (PA-31T S/N 31T-8120001 and up and PA-31T1 S/N 31T-8104001 and up) (Typical)	4E21
11-30.	Basic Aircraft Electrical Bus Systems (PA-31T2 S/N 31T-8166001 and up) (Typical)	4E22

LIST OF ILLUSTRATIONS (cont.)

Figure		Aerofiche Grid No.
11-31.	Component Location, Relay Shelf and Electrical Accessory Shelf (Early Models)	4E23
11-32.	Component Location, Relay Shelf and Electrical Accessory Shelf (PA-31T S/N 31T-8120001 and up and PA-31T1 S/N 31T-8104001 and up)	4E24
11-33.	Component Location, Relay Shelf and Electrical Accessory Shelf (PA-31T2 S/N 31T-8166001 and up)	4F1
11-34.	Forward Electrical Panel Locations, Cheyenne IA	4F2

NOTE

Electrical Schematic for PA-31T and PA-31T1 ..... 7A5
Electrical Schematics for PA-31T2 ..... 8A5
Electronic Schematics for Section XII 5A10

12-1.	Battery Connections; Two Year - Magnesium	5A12
12-2.	Pilot's Remote Switch and Emergency Locator Transmitter; Schematic	5A13
12-3.	Pilot's Remote Switch and Emergency Locator Transmitter; Schematic	5A14
12-4.	Emergency Locator Transmitter; Schematic (Narco)	5A16
12-5.	ELT Portable Folding Antenna (Narco)	5A17
12-6.	ELT Using Fixed Aircraft Antenna (Narco)	5A17
12-7.	Avionics Master and Emergency Switch Circuit	5A19
12-8.	Avionics Antenna Locations	5A22
13-1.	Heating System Flow Diagram	5B6
13-2.	Environmental Components	5B7
13-3.	Cutaway of Heater, Showing Whirling Flame (Typical)	5B9
13-4.	Heater Cycling Switch	5B10
13-5.	Combustion Air Blower and Motor Assembly (57D77)	5B16
13-6.	Combustion Air Blower and Motor Assembly (89D23-1)	5B17
13-7.	Combustion Air Blower and Motor Assembly (10E58-1, 10E58-2, 16E68-1 and 16E68-2)	5B20
13-8.	Recirculation Fan and Motor Assembly (Dynamic Air)	5B21
13-9.	Recirculation Fan and Motor Assembly (Dukes)	5C6
13-10.	Spark Plug Fixture	5C9
13-11.	Wiring - Test Setup	5C9
13-12.	Ignition Unit Assembly (Typical)	5C9
13-13.	Spark Plug (P/N 39D18) Gap Adjustment and Tool	5C10
13-14.	Spark Plug (10E75-1 and 10E75-2)	5C11
13-15.	Fuel Pressure Relief Valve Bench Test	5C16
13-16.	Test Setup Fuel Regulator	5C17
13-17.	Heater Assembly Exploded View (62D33)	5C20
13-18.	Heater Assembly Exploded View (62D33-1 and 62D33-2)	5C21
13-19.	Heater Assembly Exploded View (10E21-1)	5C23
13-20.	Heater Assembly Exploded View (10E21-2)	5D2
13-21.	Seal Plate, Plugs and Caps for Combustion Tube Leak Test	5D5

LIST OF ILLUSTRATIONS (cont.)

Figure		Aerofiche Grid No.
13-22.	Test Setup - Combustion Air Pressure Switch	5D7
13-23.	Suggested Setup for Heater Operation Test	5D10
13-24.	Suggested Wiring Connections for Heater Operation Test	5D10
13-25.	Auxiliary Heater and Switch	5D18
13-26.	Air Conditioning Flow Diagram	5D24
13-27.	Manifold Set Operation	5E3
13-28.	Charging and Evacuation Schematic (Charging Stand Method)	5E6
13-29.	Charging Stand, J-23500	5E7
13-30.	Charging Schematic (Refrigerant Drum Method)	5E9
13-31.	Compressor and Drive Assembly (Dual Belt)	5E10
13-32.	Belt Inspection	5E11
13-33.	Leak Test	5E12
13-33a.	Positioning Sankyo Compressor Internal Parts (S/N 31T-8304001 and up)	5E15
13-34.	Removing Driven Plate	5E16
13-35.	Drive and Driven Plates	5E16
13-36.	Aligning Driven Plate Key	5E17
13-37.	Installing Driven Plate	5E17
13-38.	Checking Air Gap	5E17
13-39.	Removing Pulley Retaining Ring	5E17
13-40.	Removing Pulley and Drive Plate	5E19
13-41.	Removing Bearing	5E19
13-42.	Installing Pulley and Drive Plate Bearing	5E19
13-43.	Installing Pulley and Drive Plate	5E19
13-44.	Removing Coil Housing Retaining Ring	5E20
13-44a.	Magnetic Clutch Assembly (Sankyo Compressor) (S/N 31T-8304001 and up)	5E22
13-45.	Drive Housing and Driver Assembly	5E23
13-46.	Fan and Condenser	5F3
13-47.	Expansion Valve	5F6
13-48.	Evaporator Control Valve	5F6
13-49.	Component Installation	5F7
13-50.	Installation of Seco 7 Seals	5F10
13-51.	Inspection Points (Air Conditioning System)	5F10
13-52.	Pressurization System Schematic (Dukes)	5F22
13-53.	Cabin Pressure Test Units (Typical)	5G1
13-54.	Pressurization Test Hookup	5G2
13-55.	Fabricated Hose Plug	5G4
13-56.	Fabricated Reducer	5G4
13-57.	Isobaric Valve	5G7
13-58.	Safety Valve	5G7
13-59.	Cleaning of Pressurization Controller (Typical)	5G14
13-60.	Cabin Altitude Controller (Typical)	5G18
13-61.	Door Seal System	5G20

LIST OF ILLUSTRATIONS (cont.)

Figure		Aerofiche Grid No.
13-62.	Controller Adjustment	5G21
13-63.	Cabin Altitude Vs. Aircraft Altitude	5G22
13-64.	Cabin Pressure Control System Schematic (Garrett)	5H4
13-65.	Pressurization System Schematic (Garrett)	5H5
13-66.	Safety or Isobaric Valve Schematic	5H11
13-67.	Cabin Air Pressure Outflow Valve Controller Schematic	5H14
13A-1.	Cabin Pressure Control System Schematic	6A11
13A-2.	Cabin Pressurization (PA-31T2)	6A12
13A-3.	Safety and Outflow Valves	6A14
13A-4.	Cabin Air Pressure Outflow Valve Controller	6A15
13A-5.	Fabricated Reducer Pressure Test Adapter	6A17
13A-6.	Cabin Pressure Test Unit (Typical)	6A17
13A-7.	Pressurization Test Hookup	6A18
13A-8.	Cabin Altitude Vs. Airplane Altitude	6A23
13A-8a.	Door Seal System	6B2
13A-9.	Environmental Control System	6B9
13A-10.	Cabin Pressurization and Bleed Air System Schematic	6B11
13A-11.	ECS Test Harness Extension	6B19
13A-12.	Cabin Comfort	6B20
14-1.	Oxygen System Installation (PA-31T and PA-31T1)	6C7
14-2.	Oxygen System Installation (PA-31T2)	6C8
14-3.	Propeller and Engine Air Inlet Lip Deicer System	6C15
14-4.	Electrical Diagram Showing Cycle Sequence	6C16
14-5.	Electrical Diagram Showing Cycle Sequence	6C16
14-6.	Electrical Diagram Showing Cycle Sequence	6C17
14-7.	Electrical Diagram Showing Cycle Sequence	6C17
14-8.	Suggested Use of Dial Indicator	6C21
14-9.	Centering of Brushes on Slip Rings	6C22
14-10.	Brush Block Assembly	6C23
14-11.	Angle of Contact-Brushes to Slip Rings	6C24
14-12.	Brush Module Assembly (3E2011)	6D1
14-13.	Alternate Module S tacking Arrangement	6D1
14-14.	Modular Brush Assembly (3E2044-1)	6D1
14-15.	Wiring Diagram, Propeller and Engine Air Inlet Lip Deicing System	6D3
14-16.	Repair of Lead Strap	6D5
14-17.	Propeller Deicer Installation	6D6
14-18.	Engine Air Inlet Lip Deicer Installation	6D7
14-19.	Sealer Application (Prop Boot)	6D14
14-20.	Sealer Application (Lead Strap)	6D14
14-21.	Terminal Clamp Assembly	6D14
14-22.	Wrinkled Deicers	6D15
14-23.	Propeller Blade in Feather Position	6D20

LIST OF ILLUSTRATIONS (cont.)

Figure		Aerofiche Grid No.
14-24.	Pneumatic Deicer System Installation	6E6
14-25.	Pneumatic Deicer Boots Operation	6E8
14-26.	Pneumatic Deicer System Schematic	6E8
14-27.	Marking and Cutting Scuff	6E15
14-28.	Routing Scuff	6E15
14-29.	Buffing Edge of Repair.	6E16
14-30.	Hole Through Surface of Tube	6E16
14-31.	Routing to Tube Fabric	6E17
14-32.	Cutting Surface of Tube	6E17
14-33.	Cementing Buffed Area and Patch	6E18
14-34.	Applying and Stitching Fabric	6E18
14-35.	Placing and Stitching Gum	6E19
14-36.	Removing Trapped Air	6E19
14-37.	Masking Repair	6E20
14-38.	Applying Neoprene Putty	6E20
14-39.	Propeller Synchronizer Installation	6F5
14-40.	Propeller Synchronizer Schematic	6F8
14-41.	Propeller Synchronizer Rigging (Left Engine Only)	6F10
14-42.	Trimmer Assembly	6F11
14-43.	Test Instrument T-46192	6F14
14-44.	Propeller Synchrophaser Installation (Woodward Type 1)	6F18
14-45.	Propeller Synchrophaser Diagram (Woodward Type 1)	6F22
14-46.	Propeller Synchrophaser Rigging (Left Engine Only)	6F24
14-47.	Trimmer Assembly	6G1
14-48.	10 Pin to 8 Pin Plug Adapters, P/N 5401-018	6G4
14-49.	Test Instrument, WT 46192	6G5
14-50.	Propeller Synchrophaser Installation (Woodward Type 11)	6G9
14-51.	Propeller Synchrophaser Diagram (Woodward Type 11)	6G13
14-52.	Engine Fire Detectors	6G19
14-53.	Engine Fire Control System	6G21
14-54.	Engine Fire Extinguisher	6G22
14-APP-1.	Determining Depth of Craze	6H3
14-APP-2.	Visual Inspection	6H6
14-APP-3.	Crack Limitations	6H7

LIST OF TABLES

Table		Aerofiche Grid No.
II-I.	Leading Particulars and Principal Dimensions	1B12
II-II.	Recommended Nut Torques (Inch-Pounds)	1B15
II-III.	Flare Fitting Torque Chart	1B18
II-IV.	Thread Lubricants	1C12
II-V.	Oxygen Servicing Table for 22, 48, and 50 Cubic Foot Cylinders	1D1
II-VI.	Decimal Conversion Chart	1D8
II-VII.	Consumable Materials	1D12
II-VIII.	List of Vendor Publications	1D22
III-I.	Ball Diameters for Testing Hose Restrictions	1E11
III-II.	Hose Specifications	1E12
IV-I.	Control Surface Balancing (PA-31T)	1G15
IV-II.	Control Surface Balancing (PA-31T1) (With Tip Tanks)	1G16
IV-III.	Control Surface Balancing (PA-31T1) (Without Tip Tanks)	1G17
IV-IV.	Control Surface Balancing (PA-31T2)	1G18
IV-V.	Paint Materials	1H22
V-I.	Control Surface Travel and Cable Tension	1I12
V-II.	Elevator Trim Drum and Cable Specifications	1I14
V-III.	Troubleshooting Chart (Surface Controls)	1L7
VI-I.	Leading Particulars, Hydraulic Power Pack (Ozone)	2A20
VI-II.	Leading Particulars, Hydraulic Power Pack (Wiebel Tool)	2A21
VI-III.	Inspection and Repair, Hydraulic Pump	2D12
VI-IV.	Troubleshooting, Hydraulic System	2D16
VII-I.	Inspection Limits (Goodyear 9544171-4)	2G5
VII-II.	Inspection Limits (Goodyear 5002376)	2H1
VII-III.	Brake Wear Limits (B.F. Goodrich, 2-1435-2)	2H15
VII-IV.	Troubleshooting Chart (Brakes) (B.F. Goodrich 2-1435-2)	2H17
VII-V.	Troubleshooting Chart (Landing Gear System)	2H24
VIII-I.	Propeller Specifications	2J4
VIII-II.	List of Vendor Publications	2J4
VIII-III.	Troubleshooting Chart (Fuel Scavenger System)	2L1
VIII-IV.	Torque System Calibration Data	2L9
VIII-V.	Cheyenne IA Torquemeter Calibration Data	2L12
VIII-VI.	Cheyenne IA Torquemeter Transducer Pressure Test Specifications	2L13
VIII-VII.	Troubleshooting Chart (Engine)	2L18
VIIIA-I.	Propeller Specifications	3A21
VIIIA-II.	List of Vendor Publications	3A21
VIIIA-III.	Troubleshooting Chart (Fuel Scavenger System)	3C14
VIIIA-IV.	Digital/Analog Torque Calibration Data	3C22
VIIIA-V.	Troubleshooting Chart (Engine)	3D3
IX-I.	Test Equipment	3E16
IX-II.	Scale Error Reading	3E20
IX-III.	Tank Unit Capacitance (Dry)	3E20
IX-IV.	Troubleshooting Chart (Fuel Gauging System)	3E22
IX-V.	Troubleshooting Chart (Fuel System)	3E23

LIST OF TABLES (cont.)

Table		Aerofiche Grid No.
X-I.	Pitot-Static System	3F20
X-II.	Airspeed Indicator	3F21
X-III.	Altimeter	3F22
X-IV.	Rate of Climb Indicator	3F23
X-V.	Magnetic Compass	3F24
X-VI.	Pneumatic System Pressure Gauge	3G1
X-VII.	Engine Oil Pressure Gauge (Wet Direct Reading and Electric)	3G1
X-VIII.	Fuel Pressure Gauge (Wet Direct Reading and Electric)	3G2
X-IX.	Attitude Gyro (Electric)	3G2
X-X.	Directional Gyro (Electric)	3G3
X-XI.	Turn and Bank Indicator	3G4
X-XII.	Air Temperature Gauge	3G5
X-XIII.	Voltmeter	3G5
X-XIV.	Fuel Quantity Gauge	3G5
X-XV.	Fuel Flow Gauge	3G6
X-XVI.	Oil Temperature Gauge	3G6
X-XVII.	Engine Torque Gauge	3G7
X-XVIII.	Inter-Turbine Temperature Gauge	3G8
X-XIX.	Tachometer (Propeller)	3G8
X-XX.	Engine Hour Recorder	3G9
X-XXI.	Annunciator Display	3G9
XI-I.	New Lightweight Wire Vs. Old Wire	4A13
XI-Ia.	Wire Resistance U.S. Length	4A16
XI-Ib.	Starter-Generator Test Specifications (Lear-Siegler)	4A21
XI-II.	Inspection of Components	4A22
XI-III.	Starter-Generator Test Specifications	4B5
XI-IV.	Troubleshooting Chart (Starter-Generator)	4B12
XI-V.	Troubleshooting Chart (Electrical System)	4E10
XI-VI.	Circuit Load Chart	4E14
XI-VII.	Lamp Replacement Guide	4E17
XII-I.	Index - Electronic Installation Schematics and Harness	5A10
XIII-I.	Leading Particulars (Axial Flow Fan) (Dynamic Air)	5C1
XIII-II.	Troubleshooting Chart (Recirculating Fan) (Dynamic Air)	5C2
XIII-III.	Inspection	5C14
XIII-IV.	Troubleshooting Chart (Heating)	5D14
XIII-V.	Troubleshooting Chart (Auxiliary Heater)	5D20
XIII-VI.	Temperature Pressure Chart (Standing System)	5E1
XIII-VII.	Aluminum Tubing Torque	5E2
XIII-VIII.	Vacuum Vs. Temperature	5E6
XIII-IX.	Compressor Belt Tension	5E13
XIII-X.	Troubleshooting Chart (Air Conditioning)	5F11
XIII-XI.	Cabin Differential Pressure Switch Specifications	5F21

LIST OF TABLES (cont.)

Table		Aerofiche Grid No.
XIII-XIA.	Troubleshooting Chart (Pressurization System) (DUKES)	5G23
XIII-XII.	Troubleshooting Chart (Pressurization System) (GARRETT)	5H15
XIIIA-I.	Cabin Differential Pressure Switch Specifications	6A21
XIIIA-IA.	Troubleshooting (PA-31T2 Pressurization System)	6B3
XIIIA-II.	Troubleshooting (PA-31T2 Environmental Control System)	6B16
XIV-I.	Oxygen System Components Limits	6C9
XIV-II.	Troubleshooting Chart (Oxygen System)	6C11
XIV-III.	Power Requirement for 28 VDC System	6D3
XIV-IV.	Required Materials for Repair of Deicers	6D9
XIV-V.	Electrical Resistance	6D16
XIV-VA.	Electrical Resistance - Lip Deicer (S/N 31T-8304001 and up)	6D16
XIV-VB.	Lip Deicer - Temperature/Sensor Check	6D17
XIV-VI.	Troubleshooting Chart (Engine Deicer System)	6D22
XIV-VII.	Operating Pressures	6E7
XIV-VIII.	Materials and Supplies for Cold Repairs	6E10
XIV-IX.	Materials for Vulcanized Repairs	6E12
XIV-X.	Equipment and Tools for Vulcanized Repairs	6E14
XIV-XI.	Troubleshooting Pneumatic Deicer System	6F2
XIV-XII.	Synchronizer Wiring Test	6F6
XIV-XIII.	Aircraft Wiring Check with Actuator Removed	6F12
XIV-XIV.	Troubleshooting Chart (Actuator)	6F13
XIV-XV.	Troubleshooting Chart (Propeller Synchronizer)	6F15
XIV-XVI.	Synchrophaser Wiring Test (Woodward Type I)	6F19
XIV-XVII.	Bench Testing the Actuator	6G3
XIV-XVIII.	Troubleshooting Chart (Actuator)	6G4
XIV-XIX.	Troubleshooting Chart (Propeller Synchrophaser) (Woodward Type I)	6G6
XIV-XX.	Synchrophaser Wiring Test (Woodward Type II)	6G11
XIV-XXI.	Magnetic Pickup Voltage Output Test	6G12
XIV-XXII.	Troubleshooting Chart (Propeller Synchrophaser) (Woodward Type II)	6G17
XIV-XXIII.	Pressure Temperature Correction	6G22
XV-I.	Electrical Wire Coding	7A13
XV-II.	Electrical Symbols	7A14
XVA-I.	Electrical Wire Coding	8A6
XVA-II.	Electrical Symbols	8A7

LIST OF CHARTS

Chart		Aerofiche Grid No.
2-1.	Lubrication Chart (Landing Gears)	1C15
2-2.	Lubrication Chart (Control System)	1C17
2-3.	Lubrication Chart (Power Plant and Accessories)	1C19
8-1.	Ground Adjustment Check Sheet (PA-31T)	2K11
8-2.	Ground Adjustment Check Sheet (PA-31T1)	2K12
8-3.	2000 RPM Torque Curve	2K13
8-4.	Fuel Flow (PA-31T)	2K14
8-5.	Gas Generator Speed/Data Plate Speed (PA-31T)	2K15
8-6.	Inter-Turbine Temperature (PA-31T)	2K16
8-7.	Torque (PA-31T)	2K17
8-8.	Data Plate Speed Ratio Curve (PA-31T)	2K18
8-9.	Fuel Flow (PA-31T1)	2K19
8-10.	Gas Generator Speed	2K19
8-11.	Inter-Turbine Temperature (PA-31T1)	2K20
8-12.	Torque (PA-31T1)	2K20
8A-1.	Ground Adjustment Check Sheet	3C4
8A-2.	Fuel Flow (PA-31T2)	3C5
8A-3.	Gas Generator Speed (PA-31T2)	3C5
8A-4.	Torque (PA-31T2)	3C5
8A-5.	Inter-Turbine Temperature (PA-31T2)	3C6
8A-6.	1700 RPM Torque Setting (PA-31T2)	3C7
9-1.	Fuel Cell Repair Equipment Lists	3D24
11-1.	S.A.S. Angle Relationships	4E8

SECTION I

INTRODUCTION

Paragraph		Aerofiche Grid No.
1-1.	General	1A20
1-2.	Scope of Manual	1A20
1-3.	Description	1A20
1-4.	Fuselage	1A20
1-5.	Wing	1A20
1-6.	Empennage	1A20
1-7.	Flight Controls	1A20
1-8.	Hydraulic System	1A20
1-9.	Landing Gear	1A20
1-10.	Engines	1A20
1-11.	Propellers	1A21
1-12.	Fuel System	1A21
1-13.	Environmental Control System	1A21
1-14.	Instruments	1A21
1-15.	Electronic Equipment	1A21
1-16.	Pressurization System	1A21

Revised: 1/5/84

SECTION I

INTRODUCTION

1-1. GENERAL. This manual contains service and maintenance instructions for the Piper Cheyenne, designed and manufactured as a versatile aircraft in the personal and business aviation field by the Piper Aircraft Corporation, Lock Haven, Pennsylvania.

1-2. SCOPE OF MANUAL. Sections II and III comprise the service part of this manual, Sections IV through XIV comprise the maintenance instructions and Section XV comprise the electrical schematics. The service instructions include ground handling, servicing and inspection. The maintenance instructions for each system include troubleshooting, removal and installation of components, and corrective maintenance and testing; each major system of the airplane is covered in a separate section, and ample illustrations to supplement the text are located as closely as possible to the related instructions. Only qualified personnel should perform the operations described in this manual.

1-3. DESCRIPTION. The Piper Cheyenne is a six to ten place pressurized, twin-engine turboprop, low-wing monoplane of all metal construction. The following paragraphs provide descriptions of the major components and systems.

1-4. FUSELAGE. The fuselage is a semi-monocoque structure that consists of three basic units: The nose section, the pressurized cabin section and the tail cone section.

1-5. WING. The laminar flow wing is of all metal stressed skin, full cantilever design, consisting of two wing panels bolted together at the center of the fuselage. Wing tip tanks may be installed, depending on the installation. The ailerons are cable and push rod controlled and are statically and dynamically balanced. The trailing edge wing flaps are electrically operated.

1-6. EMPENNAGE. The empennage consists of the vertical stabilizer (fin), rudder with a servo trim tab, horizontal stabilizer, and elevator with tabs. The control surfaces are cable controlled and are dynamically and statically balanced.

1-7. FLIGHT CONTROLS. The flight controls are conventional, consisting of dual control wheels that operate the ailerons and elevator, and dual foot pedals that operate the rudder. The trim tabs for each control are operated by wheels or knobs located in the control pedestal along with the position indicators for each tab.

1-8. HYDRAULIC SYSTEM. Two separate hydraulic systems are incorporated in the airplane. The main system is the hydraulic power pack that operates the landing gear and inboard main gear door actuating cylinders. The second system operates the airplane's brake system.

1-9. LANDING GEAR. The tricycle landing gear system is hydraulically operated and fully retractable with doors that completely cover the gear when retracted. The gear struts are air-oil type units. The PA-31T2 is equipped with an independent emergency gear extension system, other than the hand pump.

1-10. ENGINES. The Piper Cheyenne is powered by two Pratt and Whitney PT6A turboprop engines, which are reverse flow, free-turbine engines. (Refer to Section II, Table II-1 for Leading Particulars.)

1-11. PROPELLERS. The propellers used are Hartzell three blade, constant speed, full feathering, reversing propellers, controlled by engine oil through single-acting engine-driven propeller governors.

1-12. FUEL SYSTEM. The aircraft fuel system consists of four individual, interconnected tanks in each wing, an inboard and outboard bladder type fuel cell, a wet nacelle tank, and a wing tip tank depending upon the installation. Both the left and right fuel systems are independent of each other and are connected only by a crossfeed system. Fuel is supplied to the engine by one of two submerged fuel pumps located in each inboard tank. (Refer to Section II, Table II-I for Leading Particulars.)

1-13. ENVIRONMENTAL CONTROL SYSTEM. The heating, air conditioning, ventilating, defrosting, and dehumidification of the airplane's cabin are all controlled from the cabin comfort control panel located on the lower right instrument panel. The pressurization controls are mounted on the lower left instrument panel and are grouped together for ease of operation.

1-14. INSTRUMENTS. Provisions for the instrument installation includes panels for engine instruments and advance flight instruments, as well as space for an optional second set of flight instruments for the copilot. Flight instruments are shock mounted to minimize vibration transmitted to the panel.

1-15. ELECTRONIC EQUIPMENT. Provisions for electronic equipment include various combinations of radio installations, Autopilot and radar.

1-16. PRESSURIZATION SYSTEM. Pressurization air for the cabin of the Piper Cheyenne is obtained by using high pressure engine compressor bleed air. Pressurization provides a cabin range from sea level to 10,000 feet above sea level.

SECTION II
HANDLING AND SERVICING

Paragraph		Aerofiche Grid No.
2-1.	Introduction	1A24
2-2.	Dimensions	1A24
2-3.	Serial Number Plates	1A24
2-4.	Weight and Balance Data	1A24
2-5.	Station Reference Lines	1A24
2-6.	Access and Inspection Provisions	1A24
2-7.	Tools and Test Equipment	1B14
2-8.	Torque Requirements	1B14
2-9.	Ground Handling	1B18
2-10.	Introduction to Ground Handling	1B18
2-11.	Jacking	1B18
2-12.	Weighing	1B19
2-13.	Leveling	1B19
2-14.	Mooring	1B20
2-15.	Parking	1B21
2-16.	Towing	1B21
2-17.	Taxiing	1B21
2-18.	External Power Receptacle	1B23
2-19.	Operation of External Power Receptacle	1B23
2-20.	Servicing	1B23
2-21.	General	1B23
2-22.	Fuel System	1B23
2-23.	Servicing Fuel System	1B23
2-24.	Filling Fuel Cells	1B23
2-25.	Draining Moisture From Fuel System	1C1
2-26.	Draining Fuel System	1C1
2-27.	Procedure for Removing Biological Fuel Contamination	1C2
2-28.	Brake System	1C4
2-29.	Servicing Brake System	1C4
2-30.	Filling Brake Cylinder Reservoir	1C4
2-31.	Draining Brake System	1C4
2-32.	Oleo Struts	1C4
2-33.	Servicing Oleo Struts	1C4
2-34.	Adding Fluid to Struts	1C5
2-35.	Filling Oleo Struts	1C5
2-36.	Inflating Oleo Struts	1C6
2-37.	Landing Gear	1C6
2-38.	Servicing Landing Gear	1C6

Paragraph		Aerofiche Grid No.
2-39.	Tires	1C6
	2-40. Servicing Tires	1C6
	2-40a. Tire Balancing	1C6
	2-40b. Construction of Tire Balancer	1C6
2-41.	Hydraulic System	1C7
	2-42. Servicing Hydraulic Brake System	1C7
	2-43. Servicing Hydraulic Power Pack	1C7
2-44.	Propeller	1C8
	2-45. Servicing Propeller	1C8
2-46.	Electrical System	1C8
	2-47. Servicing Electrical System	1C8
2-48.	Lubrication System (Engine)	1C8
	2-49. Servicing and Lubrication System	1C8
	2-50. Oil Level Check	1C9
	2-51. Chip Detector/Drain Plug	1C9
	2-52. Removal of Chip Detector	1C9
	2-53. Inspection of Chip Detector	1C10
	2-54. Installation of Chip Detector	1C10
	2-55. Changing Oil	1C10
	2-56. Servicing Oil Filter Element	1C10
	2-57. Recommendations for Changing Oil	1C11
2-58.	Lubrication	1C11
	2-59. Lubrication Instructions	1C11
	2-60. Application of Grease	1C11
	2-61. Application of Oil	1C11
	2-62. Lubrication of Threads	1C12
	2-63. Lubrication of Gaskets and Seals	1C12
	2-64. Lubrication Charts	1C12
	2-65. Engine Accessory Drive Shafts Lubrication	1C12
2-66.	Oxygen System	1C24
	2-67. Servicing Oxygen System	1C24
	2-68. Oxygen System Safety Precautions	1C24
	2-69. Filling Oxygen Cylinder	1C24
2-70.	Pressurization System	1D4
2-71.	Air Conditioning System	1D4
2-72.	Cleaning	1D4
	2-73. Field Cleaning Engine	1D4
	2-74. Engine/Compressor Washing	1D5
	2-75. Cleaning Landing Gear	1D5
	2-76. Cleaning Exterior Surfaces	1D6
	2-77. Cleaning Windshield and Windows	1D6
	2-78. Cleaning Headliner, Side Panels and Seats	1D6
	2-79. Cleaning Wood Surfaces	1D6
	2-80. Cleaning Carpets	1D7
	2-81. Cleaning Toilet	1D7
	2-82. Airplane Finish Care	1D7
2-83.	Electric Windshield Wipers	1D7

SECTION II

HANDLING AND SERVICING

2-1. INTRODUCTION. This section contains routine handling and servicing procedures that are most frequently encountered. Frequent reference to this section will aid the individual by providing information such as the location of various components, ground handling procedures, routine service procedures and lubrication. When any system or component requires service other than the routine procedures as outlined in this section, refer to the appropriate section for that component.

2-2. DIMENSIONS. The principal airplane dimensions are shown in Figure 2-1 for the PA-31T and PA-31T1 and in Figure 2-2 dimensions are shown for the PA-31T2.

2-3. SERIAL NUMBER PLATES. The serial number plate for the airplane is located near the tail skid. The MAA plate is located under the lower front corner of the entrance door. The engine number plates are located on the left rear side of the engines on the accessory case.

2-4. WEIGHT AND BALANCE DATA. When figuring various weight and balance computations the weight and empty weight center of gravity of the airplane may be found in the Weight and Balance Form of the Airplane Flight Manual.

2-5. STATION REFERENCE LINES. In order to facilitate the location of various components of the airplane which require maintenance and servicing, a method utilizing fuselage station, wing station or buttock line (BL), and water line (WL) designations is frequently employed in this manual. (Refer to Figure 2-3.) Fuselage stations, buttock lines, and water lines are reference points measured by inches in the vertical or horizontal direction from a given reference line which indicates station locations of structural members of the airplane. Station 0 of the fuselage on the PA-31T and PA-31T1 is 16.50 aft of the nose and 40.50 for the PA-31T2. Station 0 (BL) of the wing, horizontal stabilizer and elevator is the center line of the airplane; and station 0 (WL) of the vertical stabilizer and rudder is 15.82 inches above the cabin floor with the airplane level. The reference datum line is located at the main spar, fuselage station 137.

2-6. ACCESS AND INSPECTION PROVISIONS. The access and inspection provisions for the airplane are shown in Figures 2-4 thru 2-6. The component to be serviced or inspected through each opening is assigned an index number to identify it in the illustration. All access plates and panels are secured by either metal fasteners or screws.

NOTE

> Before removing any access plates or panels in the pressurized portion of the fuselage, refer to Section IV to determine the sealing requirement.

The floor panels may be removed by first removing the desired seats, then removing the carpet, thus exposing the floor panel attachment screws. Carefully remove the floor panels so as not to damage the seals. To enter the aft section of the fuselage, remove the access panels on either side of the fuselage aft to station 274.

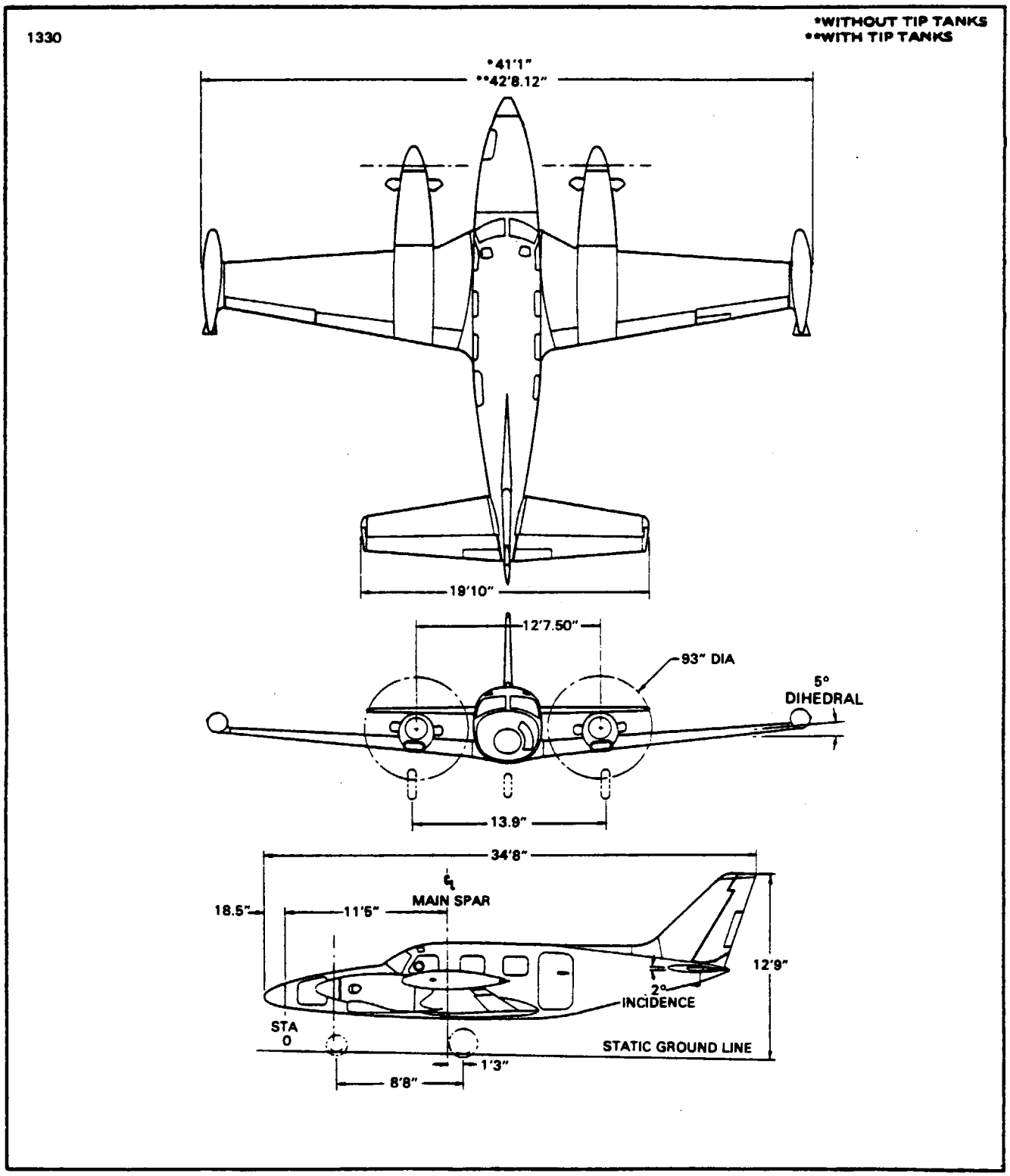

Figure 2-1. Three View of the Piper Cheyenne
(PA-31T and PA-31TI)

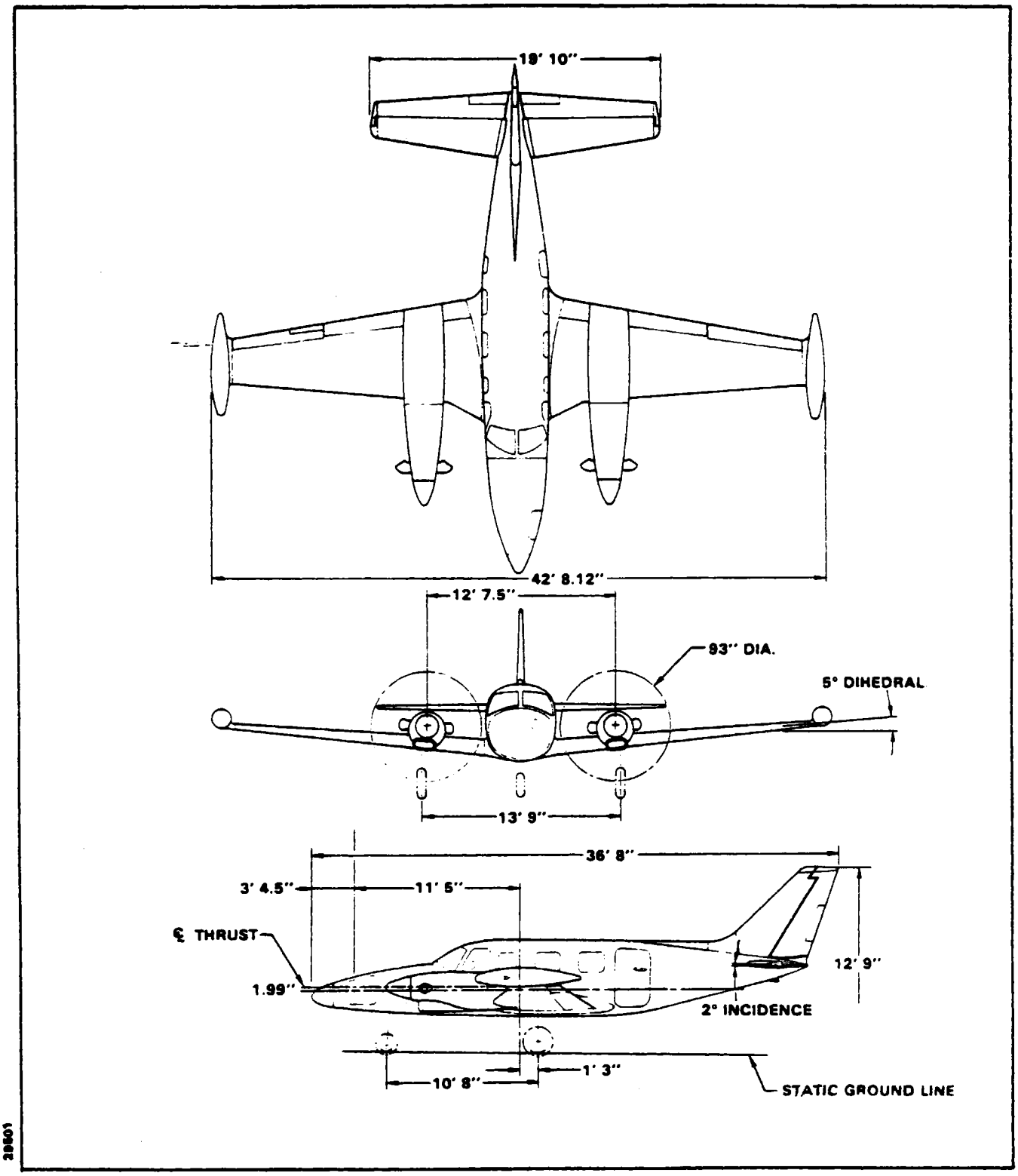

Figure 2-2. Three View of the Piper Cheyenne (PA-31T2)

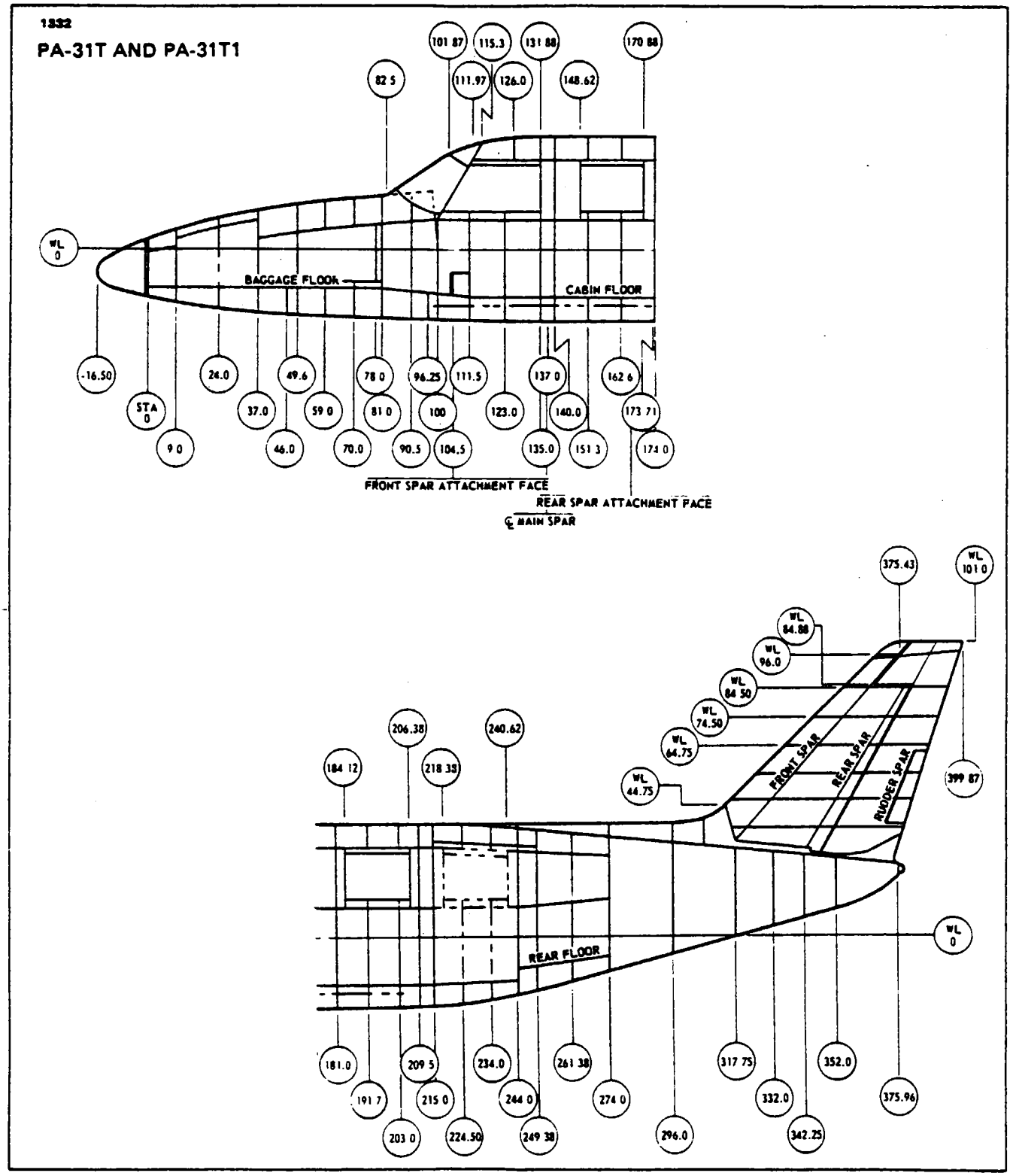

Figure 2-3. Station Reference Lines

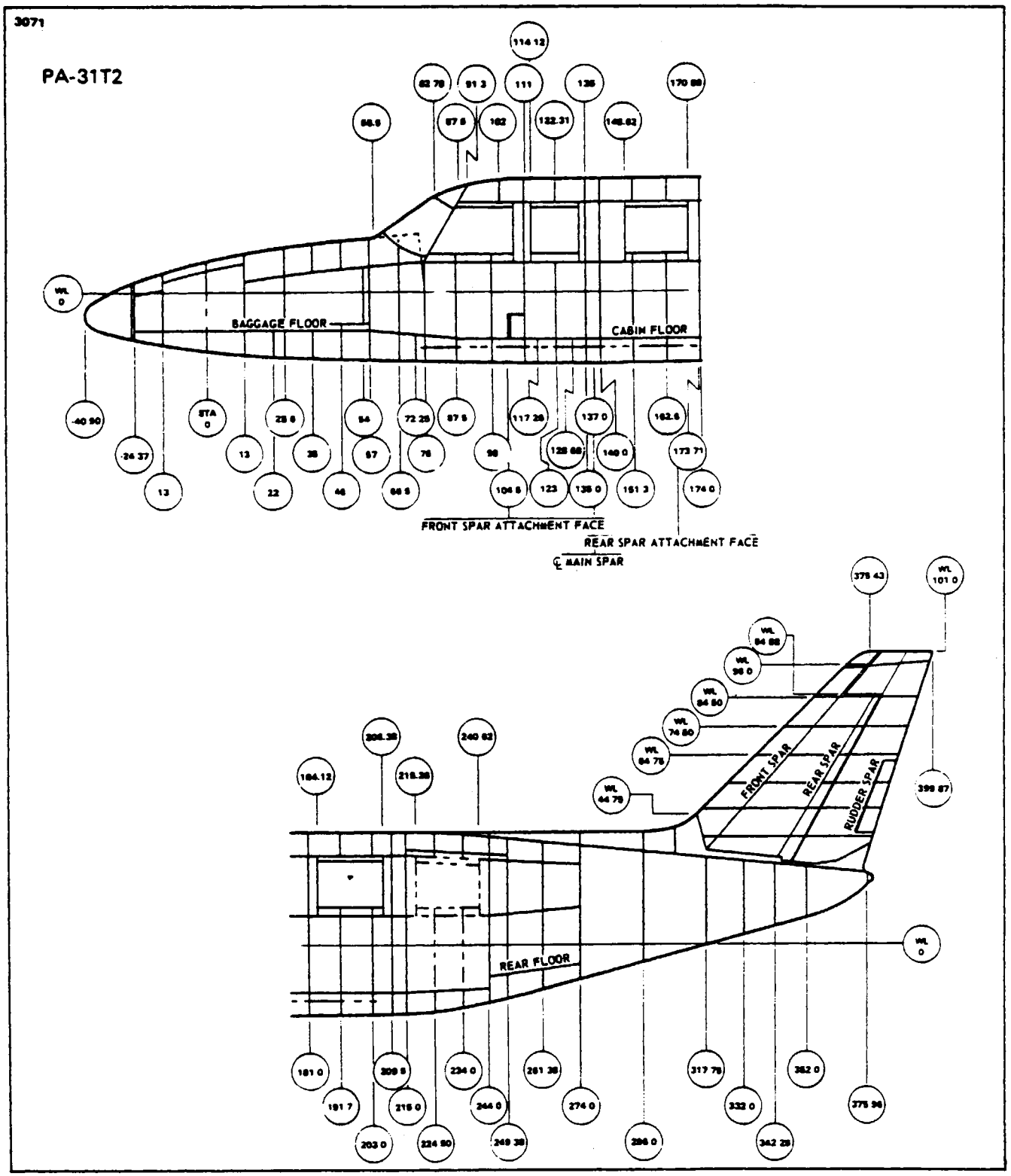

Figure 2-3. Station Reference Lines (cont.)

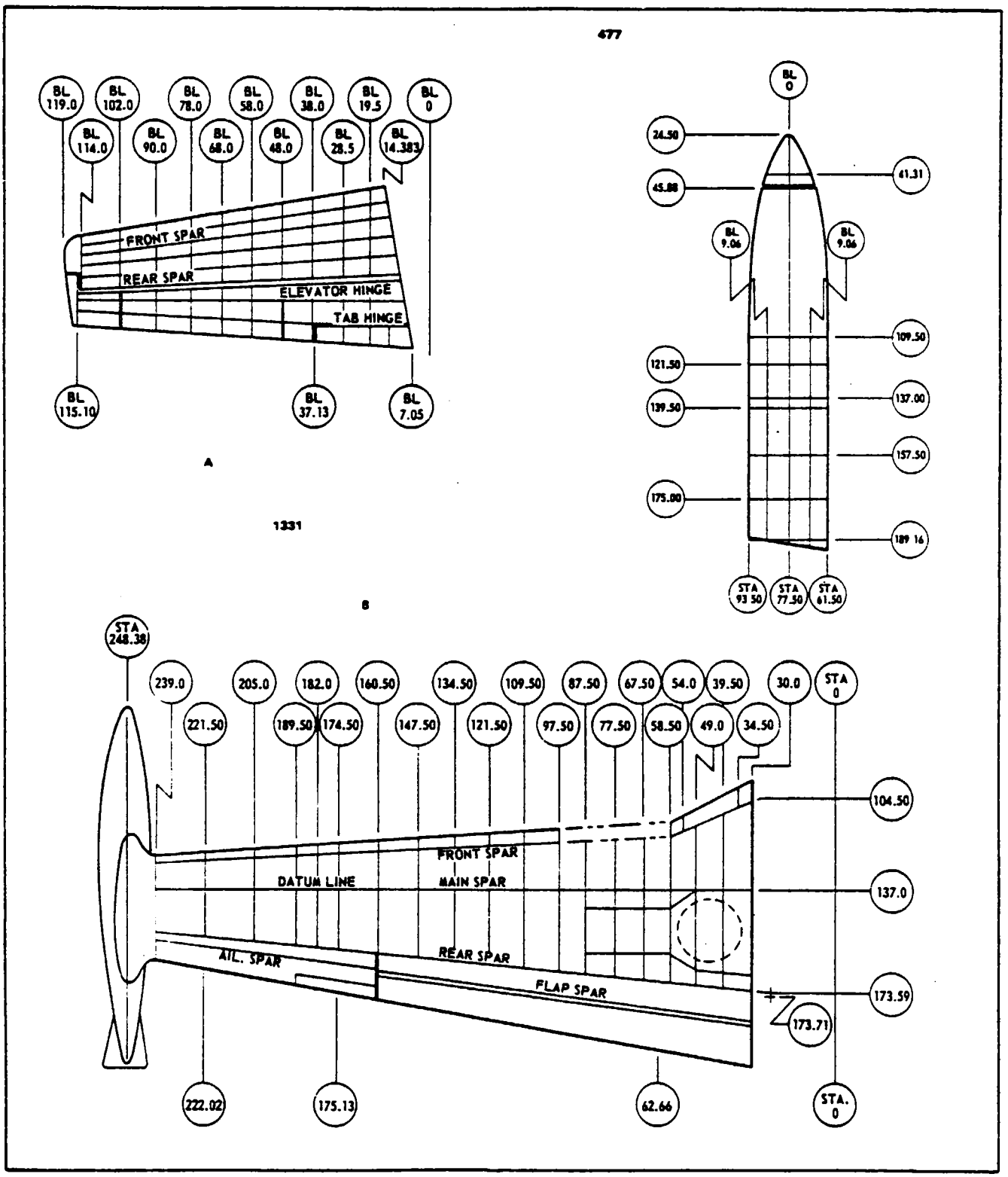

Figure 2-3. Station Reference Lines (cont.)

478 PA-31T & PA-31T1

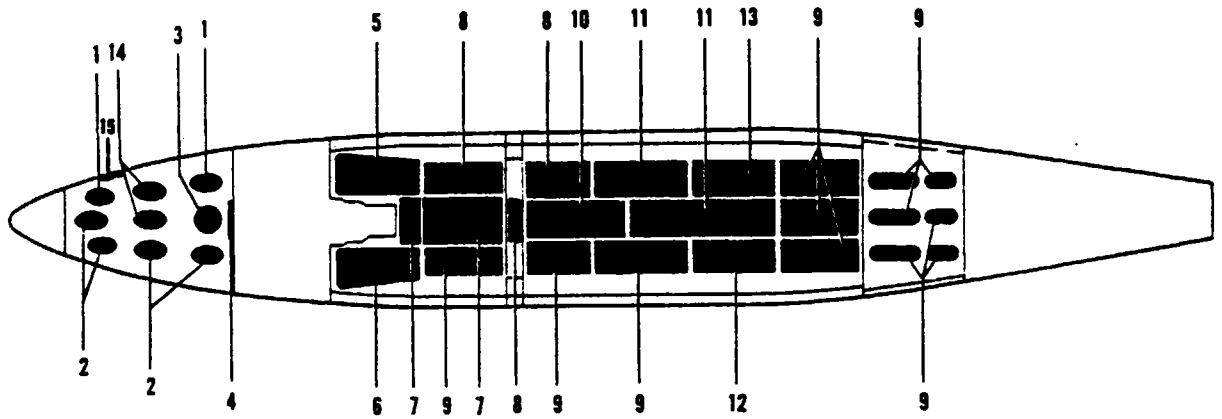

1. GENERATOR SUPPLY CABLE, RIGHT
2. GENERATOR SUPPLY CABLE, LEFT - BATTERY CABLE
3. ELECTRICAL LEADS
4. NOSE WHEEL STEERING
5. ENGINE INSTRUMENT LINES
6. ENGINE INSTRUMENT LINES AND CONTROL CABLES
7. TRIM CABLES
8. CABIN PRESSURE LINES AND PNEUMATIC LINES AND REGULATOR
9. CONTROL CABLES
10. AUTOPILOT ROLL SERVO
11. CONTROL CABLE
12. CABIN DOOR SEAL SOLENOID
13. ELECTRICAL WIRES
14. SAS COMPUTER
15. SAS VANE

1335 PA-31T & PA-31T1

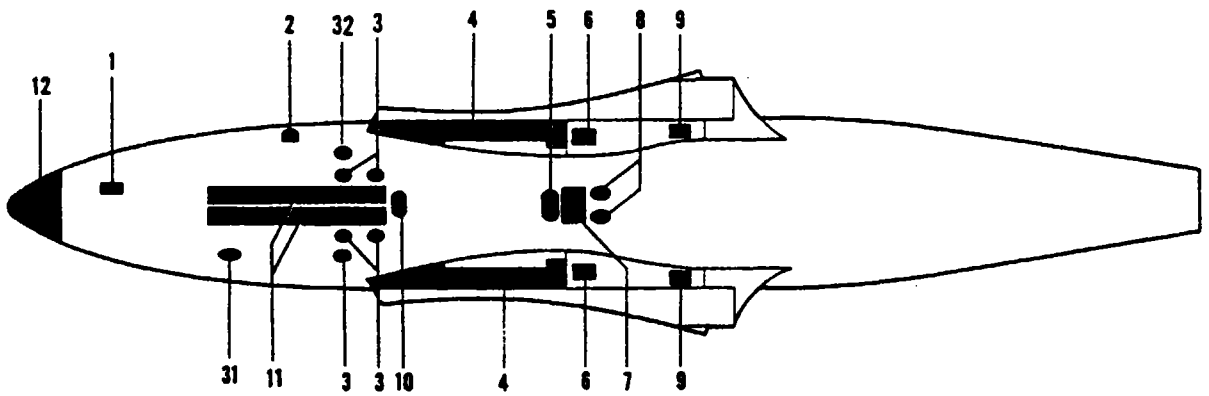

1. AUXILIARY POWER RECEPTACLE
2. OXYGEN CYLINDER RECHARGE
3. HYDRAULIC LINES AND ELECTRICAL LEADS
4. ELECTRICAL FUEL PUMP - CROSSFEED VALVE EMERGENCY SHUTOFF VALVE
5. ELECTRICAL LEAD
6. WING BUTT CONNECTION FITTING
7. SPAR SPLICE
8. PRESSURIZATION SYSTEM VALVE - AIR SUPPLY LINES
9. AILERON CONTROL CABLE - FLAP CABLE - ELECTRICAL LEADS
10. QUADRANT - CONTROL CABLES
11. GEAR DOORS
12. BATTERY ACCESS, RADAR
13. AIR CONDITIONER EVAPORATOR COVER DRAIN
14. PULLEY AND CABLE INSPECTION

Figure 2-4. Access Plates and Panels, Fuselage Interior, Fuselage and Empennage (PA-31T & PA-31T1)

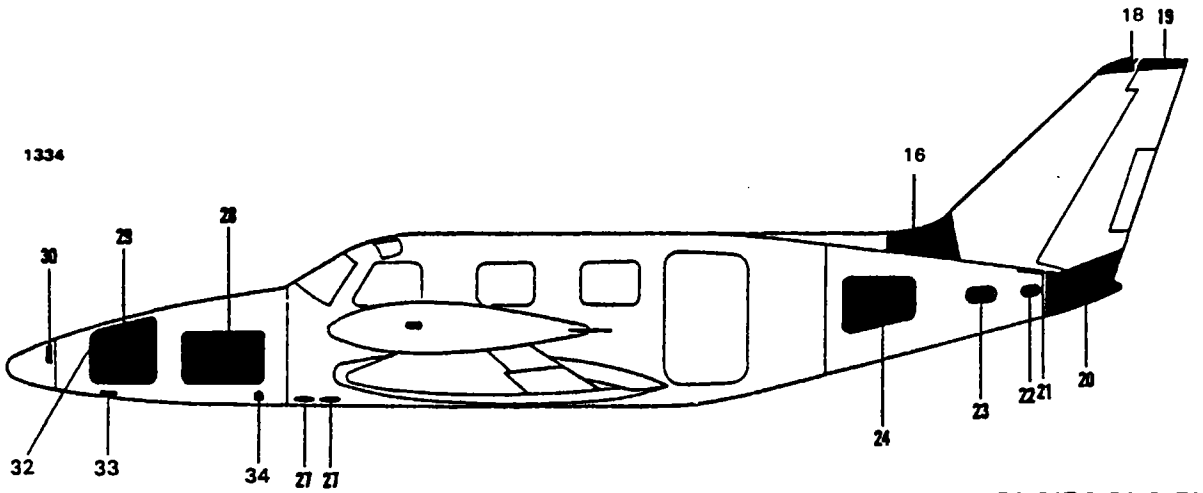

PA-31T & PA-31T1

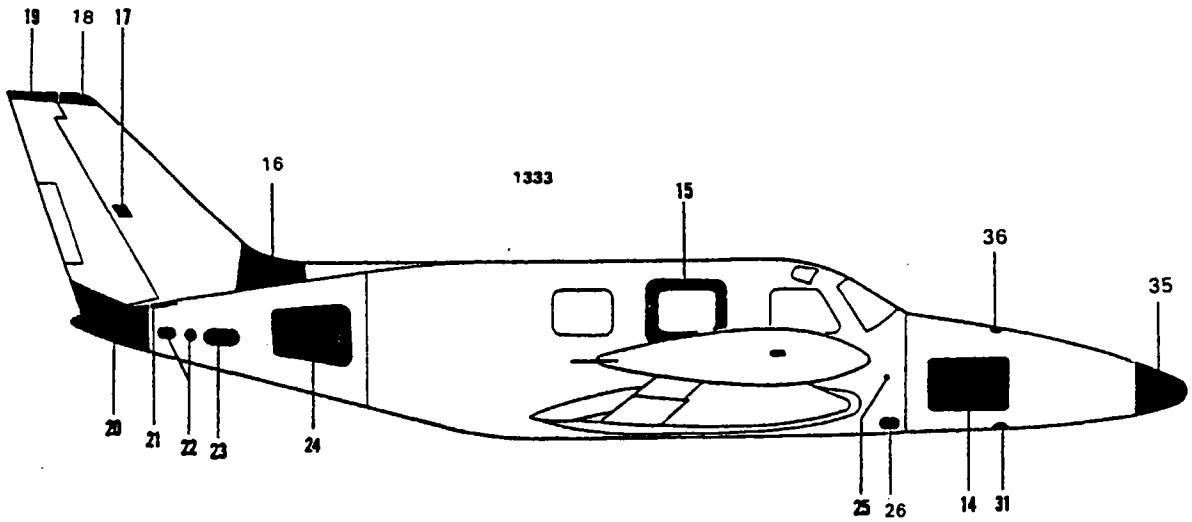

15. EMERGENCY EXIT WINDOW
16. VERTICAL FIN DEICER BOOT CONNECTION, ELT TRANSMITTER
17. RUDDER TRIM DRUM
18. FIN TIP
19. RUDDER BALANCE WEIGHT
20. ELEVATOR TORQUE TUBE
21. RUDDER CONTROL HORN
22. TRIM CABLES
23. TRIM CABLES AND ELEVATOR BELLCRANK, ELECTRONIC GEAR
24. DEICER AND INSTRUMENT STATIC AIR LINES - CONTROL CABLES - PRESSURIZATION CONTROL VALVES
25. RUDDER PEDAL TORQUE TUBE REMOVE ACCESS
26. ELECTRICAL LEAD - LINES TO ENGINE INSTRUMENTS
27. ELECTRICAL LEAD LINES
28. RADIOS - ELECTRICAL SHELF
29. NOSE BAGGAGE DOOR
30. NOSE CONE LATCH RELEASE ACCESS
(AIRCRAFT MODEL PA-31T, SERIAL NUMBERS 31T-7400002 to 31T-7520032 INCLUSIVE)
31. AIR CONDITIONER EVAPORATOR COVER DRAIN
32. NOSE CONE LATCH RELEASE ACCESS
33. AUXILIARY POWER RECEPTACLE
34. OXYGEN CYLINDER RECHARGE
35. BATTERY ACCESS, RADAR
36. HYDRAULIC RESERVOIR - BRAKE SYSTEM

Figure 2-4. Access Plates and Panels, Fuselage Interior, Fuselage and Empennage (PA-31T and PA-31T1) (cont)

3069

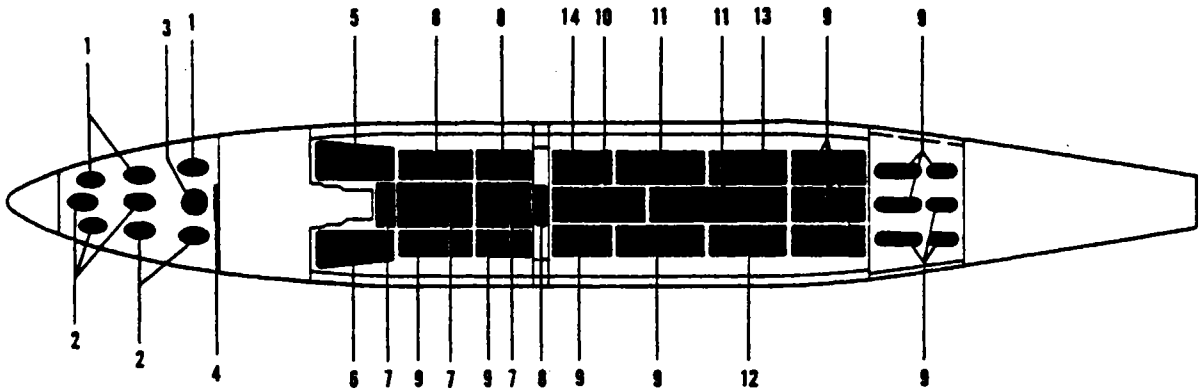

1. GENERATOR SUPPLY CABLE RIGHT
2. GENERATOR SUPPLY CABLE, LEFT - BATTERY CABLE
3. ELECTRICAL LEADS
4. NOSE WHEEL STEERING
5. ENGINE INSTRUMENT LINES, AND BLEED AIR
6. ENGINE INSTRUMENT LINES AND CONTROL CABLES
7. TRIM CABLES
8. CABIN PRESSURE LINES AND BLEED AIR
9. CONTROL CABLES
10. AUTOPILOT ROLL SERVO
11. CONTROL CABLE
12. CABIN DOOR SEAL SOLENOID VALVE
13. ELECTRICAL WIRES
14. CABIN PRESSURE LINES, BLEED AIR AND BLEED AIR COOLING FAN

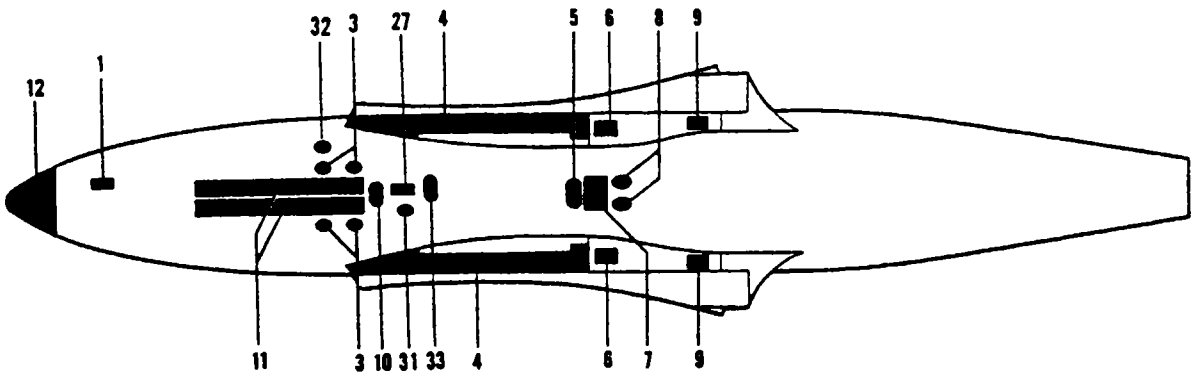

1. AUXILIARY POWER RECEPTACLE
2. OXYGEN CYLINDER RECHARGE
3. HYDRAULIC LINES AND ELECTRICAL LEADS
4. ELECTRIC FUEL PUMP - SELECTOR VALVE - EMERGENCY SHUTOFF VALVE
5. ELECTRICAL LEAD
6. WING BUTT CONNECTION FITTING
7. SPAR SPLICE
8. HYDRAULIC RESERVOIR
9. AILERON CONTROL CABLE - FLAP CABLE - ELECTRICAL LEADS
10. QUADRANT - CONTROL CABLES
11. GEAR DOORS
12. BATTERY ACCESS, RADAR
13. HYDRAULIC RESERVOIR - BRAKE SYSTEM
14. ENVIRONMENTAL CONTROL UNITS - HYDRAULIC SERVICE HOOKUP - LANDING GEAR
15. EMERGENCY EXIT
16. VERTICAL FIN DEICER BOOT CONNECTION, ELT TRANSMISSION

Figure 2-5. Access Plates and Panels, Fuselage Interior, Fuselage and Empennage (PA-31T2)

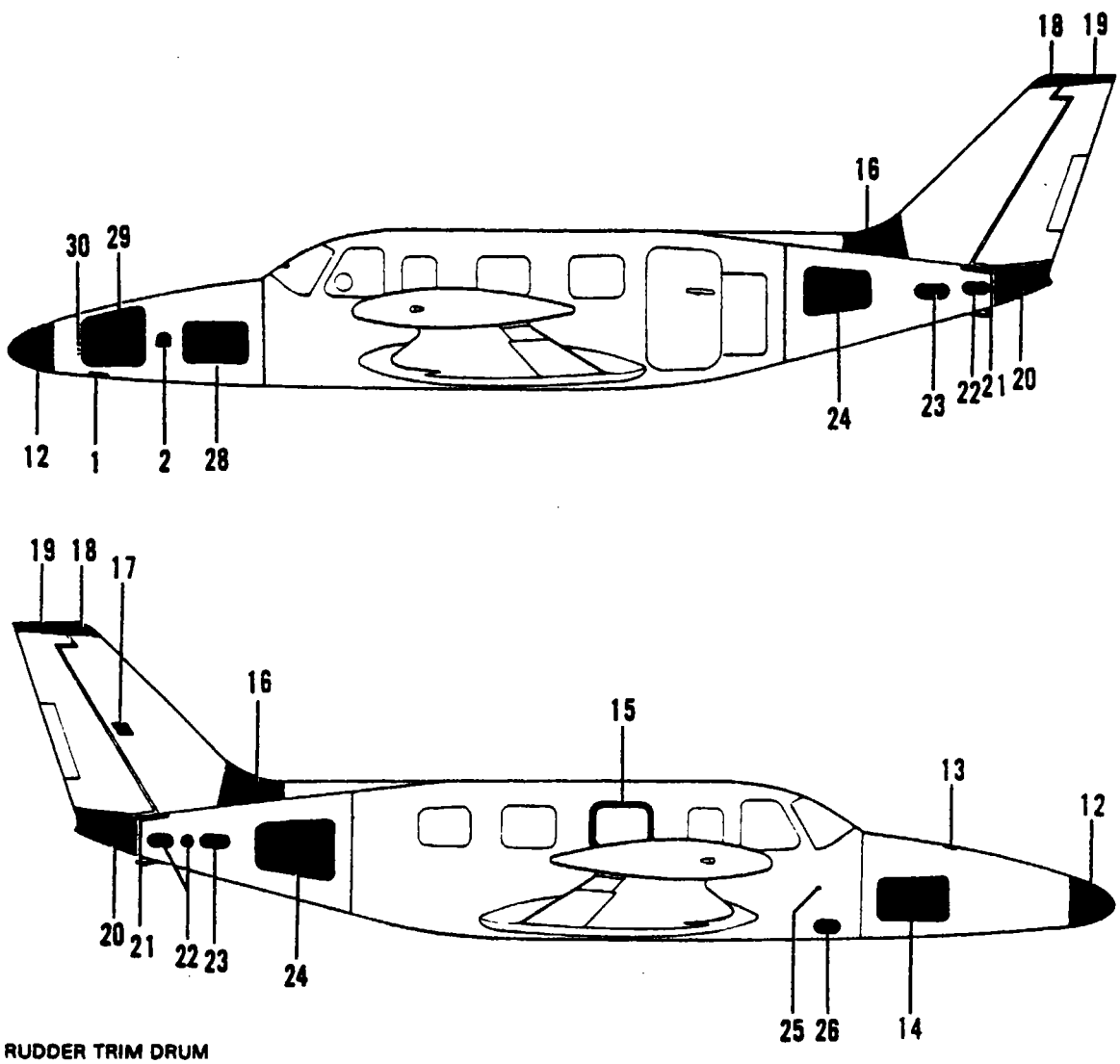

17. RUDDER TRIM DRUM
18. ANTI-COLLISION - ANTENNA COUPLER BOX
19. RUDDER BALANCE WEIGHT
20. ELEVATOR TRIM DRUM
21. RUDDER CONTROL HORN
22. TRIM CABLES
23. TRIM CABLES AND ELEVATOR BELLCRANK, ELECTRONIC GEAR
24. DEICER AND INSTRUMENT STATIC AIR LINES - CONTROL CABLES - PRESSURIZATION CONTROL VALVES
25. RUDDER PEDAL TORQUE TUBE REMOVE ACCESS
26. ELECTRICAL LEAD - LINES TO ENGINE INSTRUMENTS
27. CO2 BLOW DOWN BOTTLES
28. RADIOS - ELECTRICAL SHELF
29. NOSE BAGGAGE DOOR
30. NOSE CONE LATCH RELEASE ACCESS INSIDE BAGGAGE COMPARTMENT
31. FUEL AND HYDRAULIC LINES
32. PULLEY AND CABLE INSPECTION
33. CIRCUIT BREAKERS

Figure 2-5. Access Plates and Panels, Fuselage Interior, Fuselage and Empennage (PA-31T2) (cont.)

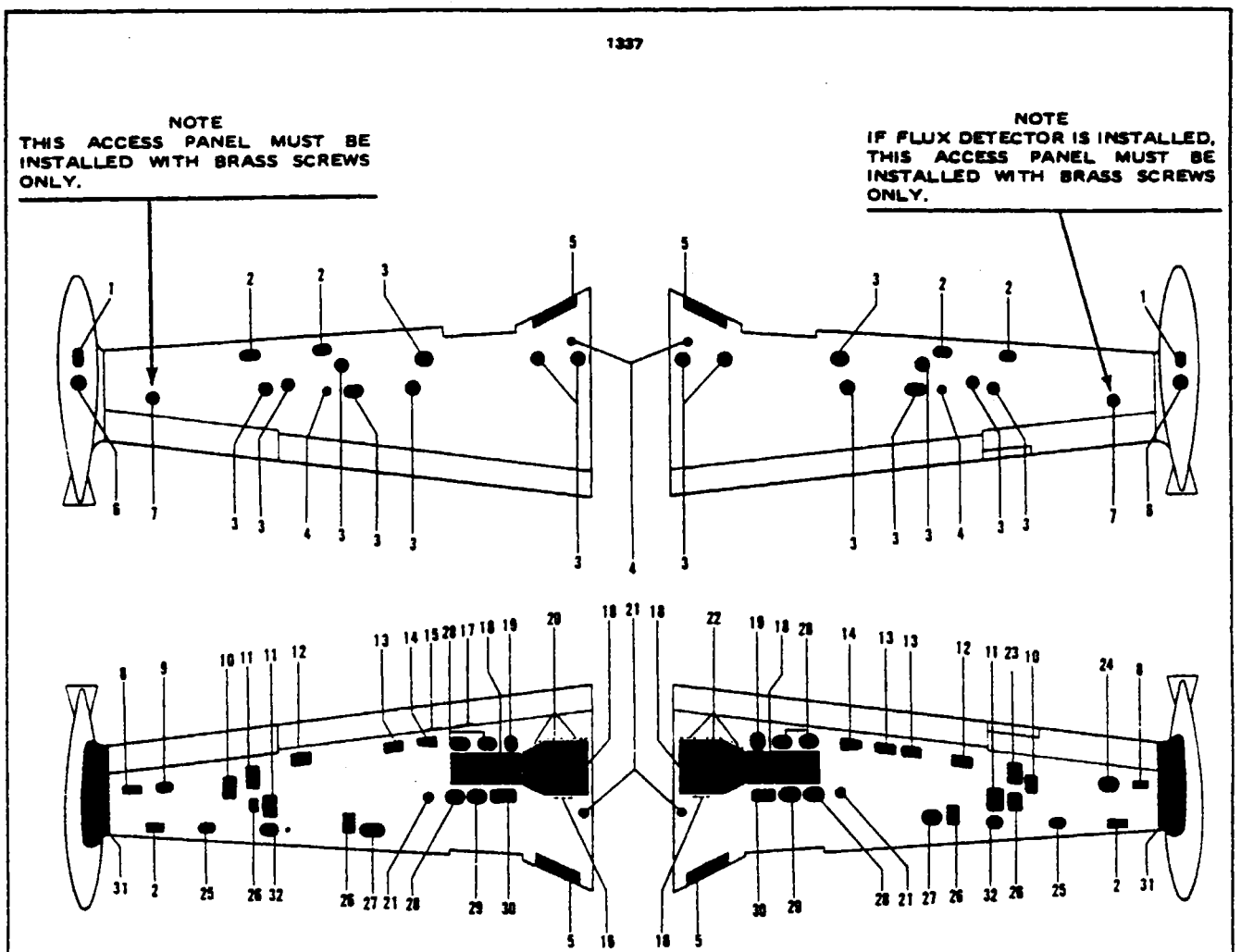

1. INSPECTION, VENT LINE
2. INSPECTION ACCESS
3. FUEL CELL
4. FUEL SENDING UNIT - PA-31T & PA-31T1 ONLY
5. LINES - WIRES - CABLES
6. FUEL FILLER, TIP TANK
7. FLUX DETECTOR
8. TRANSFORMER, STROBE LIGHT
9. ELECTRONIC GEAR
10. AILERON BELLCRANK
11. ELECTRIC FUEL PUMP
12. AILERON CABLE AND FUEL LINE
13. AILERON CONTROL CABLE
14. FLAP TANSMISSION
15. FLAP TIME DELAY SWITCH
16. PNEUMATIC LINES
17. FLAP LIMIT SWITCHES
18. LANDING GEAR DOOR
19. CABLES AND WIRES
20. FLAP CABLE - AILERON CONTROL CABLE - ELECTRICAL LEADS
21. FUEL QUICK DRAIN
22. FLAP CABLE - AILERON CONTROL CABLE - FREON LINES
23. AILERON TRIM DRUM
24. WING BAY ACCESS
25. INSPECTION - FUEL LINES
26. FUEL CELL VENT
27. FUEL CELL VENT LINE
28. LANDING GEAR ATTACHMENT BOLT
29. WIRES AND LINES
30. FUEL LINES AND CABIN PRESSURE LINES
31. FUEL SENDER UNIT

Figure 2-6. Access Plates and Panel, Wings

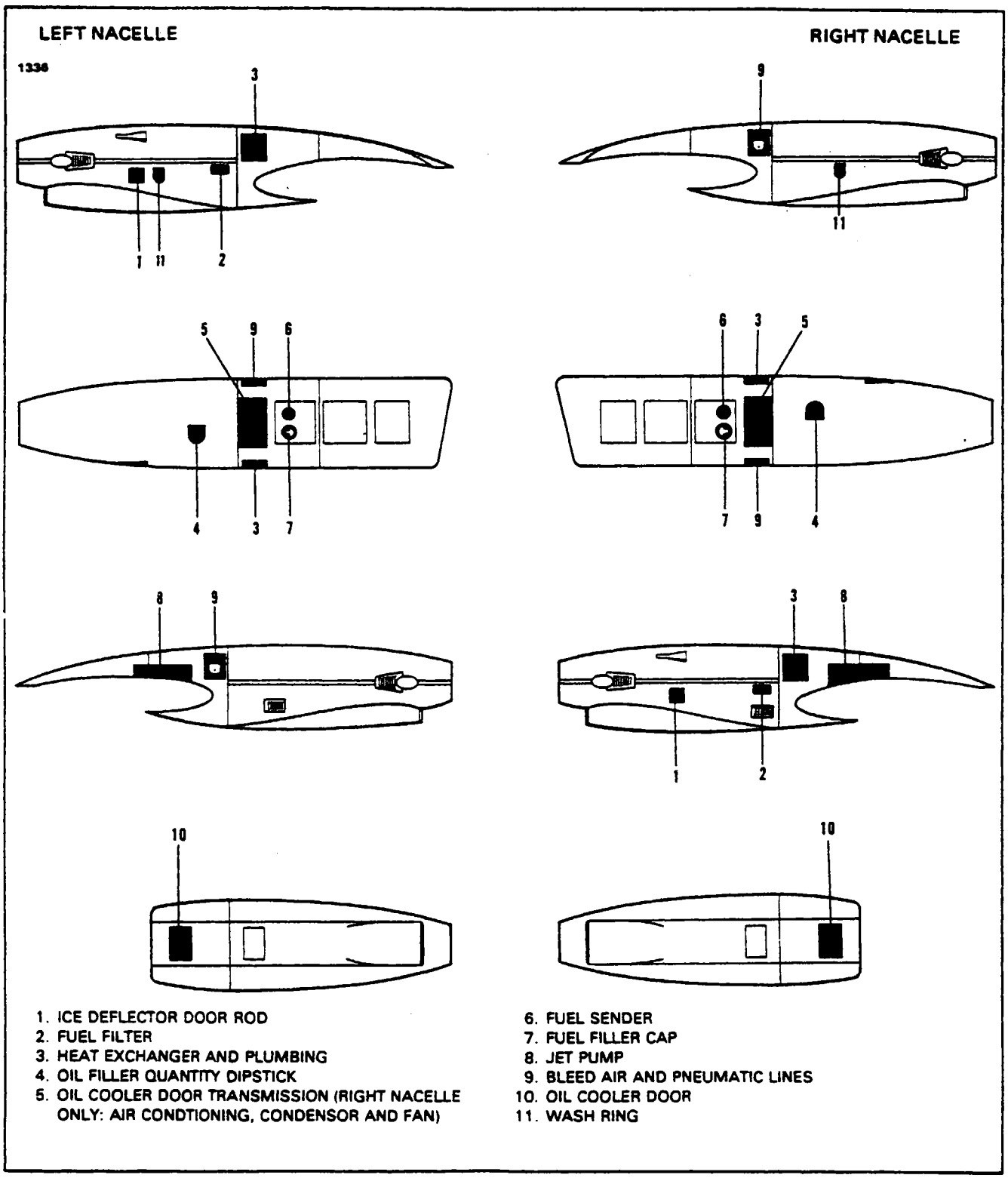

1. ICE DEFLECTOR DOOR ROD
2. FUEL FILTER
3. HEAT EXCHANGER AND PLUMBING
4. OIL FILLER QUANTITY DIPSTICK
5. OIL COOLER DOOR TRANSMISSION (RIGHT NACELLE ONLY: AIR CONDTIONING, CONDENSOR AND FAN)
6. FUEL SENDER
7. FUEL FILLER CAP
8. JET PUMP
9. BLEED AIR AND PNEUMATIC LINES
10. OIL COOLER DOOR
11. WASH RING

Figure 2-6. Access Plates and Panel, Wings (cont.)

TABLE II-I. LEADING PARTICULARS AND PRINCIPAL DIMENSIONS

MODEL	
ENGINE	
Manufacturer	Pratt and Whitney Aircraft of Canada Limited
Model	PT6A-28[1] PT6A-11[2] PT6A-135[5]
Engine Type	Free Turbine
Horsepower Ratings	620[1,5] 500[2]
Oil Specification	PWA 521 (Type II), CPW-202 (Refer to SB No. 1001[1,5] or 1200[1,2] latest revision)
Oil Tank Capacity	2.3 U.S. gal.
Fuel Specification	PWA 522 (latest revision) or CPW 46 (latest revision)
PROPELLER	
Manufacturer	Hartzell
Type	Constant Speed - Feathering and Reversing
Hub	HC-B3TN-3B
Blade	T10173-HB8[1,2] or T10173B-8[1,2] or T10178B-8[5]
Diameter	93 in.
Overspeed Governor Model	210598
FUEL SYSTEM CAPACITY	
Total System Capacity	308 U.S. gal.[3,2] 374 U.S. gal.[4]
Unusable Fuel	8.0 U.S. gal. 8.0 U.S. gal.

FOOTNOTES:
(1) PA-31T ONLY
(2) PA-31T1 ONLY
(3) WITHOUT TIP TANKS
(4) WITH TIP TANKS
(5) PA-31T2 ONLY

TABLE II-I. LEADING PARTICULARS AND PRINCIPAL DIMENSIONS

LANDING GEAR

Type	Hydraulic
Shock Strut Type	Combination Air and Oil
Wheel, Nose	B.F. Goodrich, 3-1331[1,5] or 3-1076[1,2]
Wheel, Main	Goodyear, 9544171-1[1,2] Cleveland, 40-106[1,2] B.F. Goodrich, 3-1392[5] or 3-1424[5]
Brake	Goodyear, 5002376[1,2] Cleveland, 30-106[1,2] B.F. Goodrich, 2-1435-2[5]
Tire Nose	18 x 4.4, 6 ply rating, Type VII tubeless[1,5] for B.F. Goodrich, 3-1331. (Inflate to 90 psi.) 17.5 x 6.25-6, 10 ply tube type for B.F. Goodrich, 3-1076 or for Clevelands 40-140.[1,2] (Inflate to 80 psi.)
Tire Main	6.50 x 10, 10 ply, Type III Ribbed Tread. (Inflate to 80 psi[1,2]) (Inflate to 91 psi[5]).

FOOTNOTES:
(1) PA-31T ONLY
(2) PA-31T1 ONLY
(3) WITHOUT TIP TANKS
(4) WITH TIP TANKS
(5) PA-31T2 ONLY

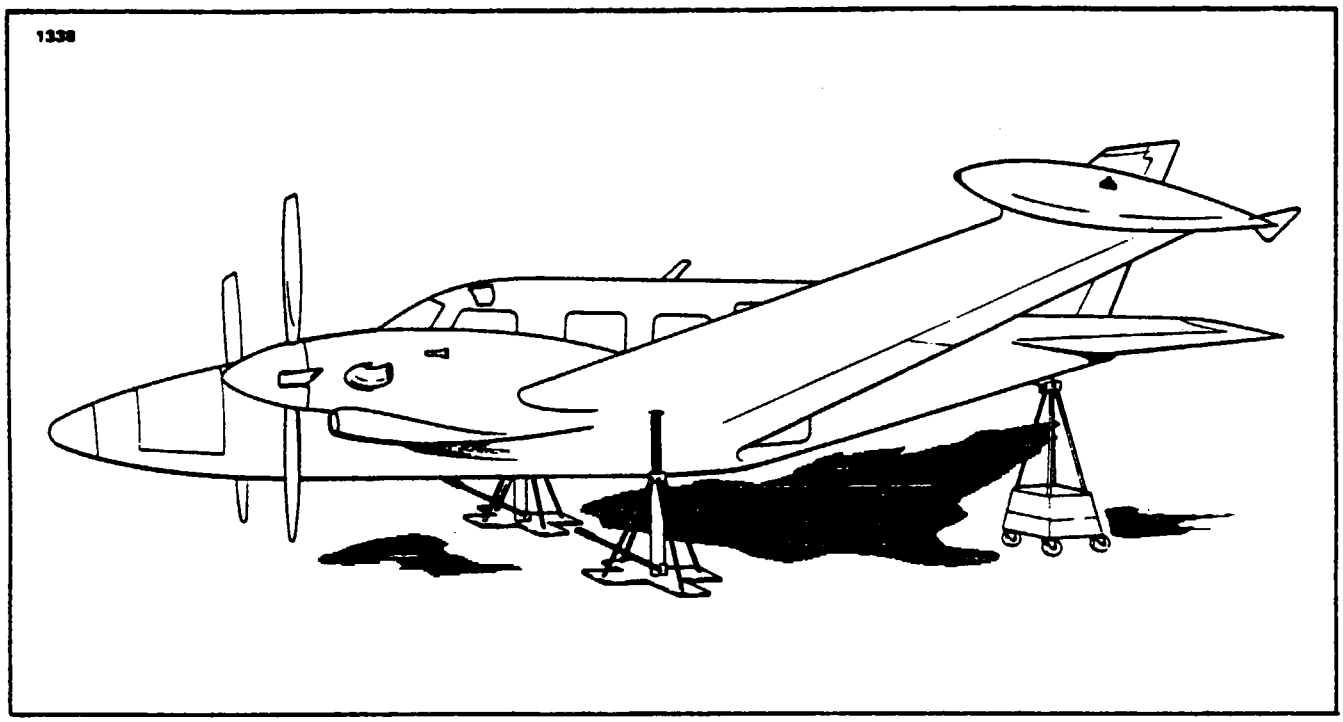

Figure 2-7. Jacking Configuration (Typical)

2-7. TOOLS AND TEST EQUIPMENT. Some special tools other than normal shop tools will be required to service the aircraft. An illustrated list of tools required may be found in Figure 2-16 at the end of this section.

2-8. TORQUE REQUIREMENTS. The torque values given in Table II-II are derived from oil free cadmium-plated threads and are recommended for all airframe installation procedures where torquing is required, unless otherwise noted in sections where other values are stipulated. Engine torque values are found in the latest revision of Pratt and Whitney Engine Maintenance Manual (refer to Table II-VIII for appropriate Pratt and Whitney Engine Maintenance Manual), and propeller torque values are found in Section VIII or Section VIIIA of this manual. Table II-III lists the torque values for flared fittings of various sizes and material.

NOTE

When flared fittings are being installed, ascertain that the male threads are properly lubricated. Torque the fittings in accordance with Table II-III.

CAUTION

Do not over torque fittings.

TABLE II-II. RECOMMENDED NUT TORQUES

TORQUES: The importance of correct application cannot be overemphasized. Undertorque can result in unnecessary wear of nuts and bolts as well as the parts they are holding together. When insufficient pressures are applied, uneven loads will be transmitted throughout the assembly which may result in excessive wear or premature failure due to fatigue. Overtorque can be equally damaging because of failure of a bolt or nut from overstressing the thread areas. The following procedures should be followed to assure that the correct torque is applied:

1. Torque (self-locking fasteners) — Add the friction torque from Chart A for sizes 8 through 7/16 to the recommended torque from Chart B to get the final torque. This would be the actual reading on the torque wrench.
2. Torque (castellated and non-self-locking nuts) — Use only the torque given in Chart B. Unless otherwise specified, when castellated nuts are used with a cotter pin on moving joints, do not torque the nut. Turn the nut onto the bolt until proper grip is established and alignment with the cotter pin hole is achieved. Then install the cotter pin.

GENERAL REQUIREMENTS:

1. Calibrate the torque wrench periodically to assure accuracy; recheck frequently.
2. Ascertain that the bolt and nut threads are clean and dry (unless otherwise specified by the manufacturer). If the bolt or nut is specified to be lubricated prior to tightening, the torque range should be reduced 50 percent.
3. Use a bolt length long enough to prevent bearing loads on the threads. The complete chamfer or end radius of the bolt or screw must extend through the nut.
4. Unique torques specified in the text of this manual supersede the torques given in Charts A and B.
5. Refer to the latest revision of the appropriate Pratt and Whitney Engine Maintenance Manual for torques on parts used on engines.
6. A maximum of two AN960 washers may be added under the bolt heads or nuts to correct for variations in material thickness within the tolerances permitted.
7. Limitations of the use of self-locking nuts, bolts and screws including fasteners with non-metallic inserts are as follows:
   A. Fasteners incorporating self-locking devices shall not be reused if they can be run up using only fingers. They may be reused if hand tools are required to run them up, providing there is no obvious damage to the self-locking device prior to installation.
   B. Bolts 5/16 inch diameter and over with cotter pin holes may be used with self-locking nuts. Nuts with non-metallic locking devices may be used in this application only if the bolts are free from burrs around the cotter pin hole.
   C. Do not use self-locking nuts at joints which subject either the nut or the bolt to rotation.
   D. Never tap or rethread self-locking fasteners. Do not use nuts, bolts or screws with damaged threads or rough ends.

TABLE II-II. RECOMMENDED NUT TORQUES (cont.)

TABLE A

BOLT SIZE	FRICTION DRAG TORQUE (IN LBS)
8*	15
10	18
1/4	30
5/16	60
3/8	80
7/16	100

*APPLICABLE TO COARSE THREADS ONLY

TABLE B

	BOLTS Steel Tension	
	AN 3 thru AN 20 AN 42 thru AN 49 AN 73 thru AN 81 AN 173 thru AN 186 MS 20033 thru MS 20046 MS 20073 MS 20074 AN 509 NK9 MS 24694 AN 525 NK525 MS 27039	
	NUTS	
	Steel Tension	Steel Shear
	AN 310 AN 315 AN 363 AN 365 NAS 1021 MS 17825 MS 21045 MS 20365 MS 20500 NAS 679	AN 320 AN 364 NAS 1022 MS 17826 MS 20364

COARSE THREAD SERIES				
Nut-bolt size	Torque Limits in-lbs		Torque Limits in-lbs	
	Min.	Max.	Min	Max
8 -32	12	15	7	9
10 -24	20	25	12	15
1/4-20	40	50	25	30
5/16-18	80	90	48	55
3/8-16	160	185	95	110
7/16-14	235	255	140	155
1/2-13	400	480	240	290
9/16-12	500	700	300	420
5/8-11	700	900	420	540
3/4-10	1,150	1,600	700	950
7/8- 9	2,200	3,000	1,300	1,800
1 -8	3,700	5,000	2,200	3,000
1-1/8-8	5,500	6,500	3,300	4,000
1-1/4-8	6,500	8,000	4,000	5,000

PPS 20015E

TABLE II-II. RECOMMENDED NUT TORQUES (cont.)

	BOLTS Steel Tension		BOLTS Steel Tension		BOLTS Aluminum	
	AN 3 thru AN 20 AN 42 thru AN 49 AN 73 thru AN 81 AN 173 thru AN 186 MS 20033 thru MS 20046 MS 20073 MS 20074 AN 509 NK9 MS 24694 AN 525 NK525 MS 27039		MS 20004 thru MS 20024 NAS 144 thru NAS 158 NAS 333 thru NAS 340 NAS 583 thru NAS 590 NAS 624 thru NAS 644 NAS 1303 thru NAS 1320 NAS 172 NAS 174 NAS 517	Steel shear bolt NAS 464	AN 3DD thru AN 20DD AN 173DD thru AN 186DD AN 509DD AN 525D MS 27039D MS 24694DD	
	NUTS		NUTS		NUTS	
	Steel Tension	Steel Shear	Steel Tension	Steel Shear	Alum. Tension	Alum. Shear
	AN 310 AN 315 AN 363 AN 365 NAS 1021 MS 17825 MS 21045 MS 20365 MS 20500 NAS 679	AN 320 AN 364 NAS 1022 MS 17826 MS 20364	AN 310 AN 315 AN 363 AN 365 MS 17825 MS 20365 MS 21045 NAS 1021 NAS 679 NAS 1291	AN 320 AN 364 NAS 1022 MS 17826 MS 20364	AN 365D AN 310D NAS 1021D	AN 320D AN 364D NAS 1022D

FINE THREAD SERIES

Nut-bolt size	Torque Limits in-lbs		Torque Limits in-lbs		Torque Limits in-lbs		Torque Limits in-lbs		Torque Limits in-lbs		Torque Limits in-lbs	
	Min	Max.	Min.	Max	Min.	Max.	Min.	Max.	Min.	Max	Min.	Max
8 -36	12	15	7	9					5	10	3	6
10 -32	20	25	12	15	25	30	15	20	10	15	5	10
1/4-28	50	70	30	40	80	100	50	60	30	45	15	30
5/16-24	100	140	60	85	120	145	70	90	40	65	25	40
3/8-24	160	190	95	110	200	250	120	150	75	110	45	70
7/16-20	450	500	270	300	520	630	300	400	180	280	110	170
1/2-20	480	690	290	410	770	950	450	550	280	410	160	260
9/16-18	800	1,000	480	600	1,100	1,300	650	800	380	580	230	360
5/8-18	1,100	1,300	660	780	1,250	1,550	750	950	550	670	270	420
3/4-16	2,300	2,500	1,300	1,500	2,650	3,200	1,600	1,900	950	1,250	560	880
7/8-14	2,500	3,000	1,500	1,800	3,550	4,350	2,100	2,690	1,250	1,900	750	1,200
1 -14	3,700	4,500	2,200	3,300	4,500	5,500	2,700	3,300	1,600	2,400	950	1,500
1-1/8-12	5,000	7,000	3,000	4,200	6,000	7,300	3,600	4,400	2,100	3,200	1,250	2,000
1-1/4-12	9,000	11,000	5,400	6,600	11,000	13,400	6,600	8,000	3,900	5,600	2,300	3,650

TABLE II-III. FLARE FITTING TORQUE CHART

TORQUE - INCH POUND						
TUBING OD INCHES	ALUMINUM - ALLOY TUBING FLARE-AND 10061 OR AND 10078		STEEL TUBING FLARE AND 10061		HOSE END FITTING AND HOSE ASSEMBLIES	
	MINIMUM	MAXIMUM	MINIMUM	MAXIMUM	MINIMUM	MAXIMUM
1/8	---	---	---	---	---	---
3/16	---	---	90	100	70	100
1/4	40	65	135	150	70	120
5/16	60	80	180	200	85	180
3/8	75	125	270	300	100	250
1/2	150	250	450	500	210	420
5/8	200	350	650	700	300	480
3/4	300	500	900	1000	500	850
1	500	700	1200	1400	700	1150
1-1/4	600	900	---	---	---	---
1-1/2	600	900	---	---	---	---
1-3/4	---	---	---	---	---	---
2	---	---	---	---	---	---

2-9. GROUND HANDLING.

2-10. INTRODUCTION TO GROUND HANDLING. Ground handling covers all essential information governing the handling of the airplane while on the ground. This includes jacking, weighing, leveling, mooring, parking, towing and taxiing. When the airplane is handled in the manner described in the following paragraphs, damage to the airplane and its equipment will be prevented.

2-11. JACKING. The airplane is provided with a jacking pad on each main spar just outboard of the engine nacelle and a support position by making use of the tail skid. (Refer to Figure 2-7.) To jack the airplane, proceed as follows:

a. Place the jacks under the jack pads.

b. Attach the tail support to the tail skid. Place a minimum of 500 pounds of ballast on the support to hold the tail down.

CAUTION

Be sure to apply sufficient tail support ballast; otherwise, the airplane will tip forward and fall on the fuselage nose section. Do not allow side loads to be applied to the tail skid.

c. Raise the jacks evenly until all three wheels clear the floor.

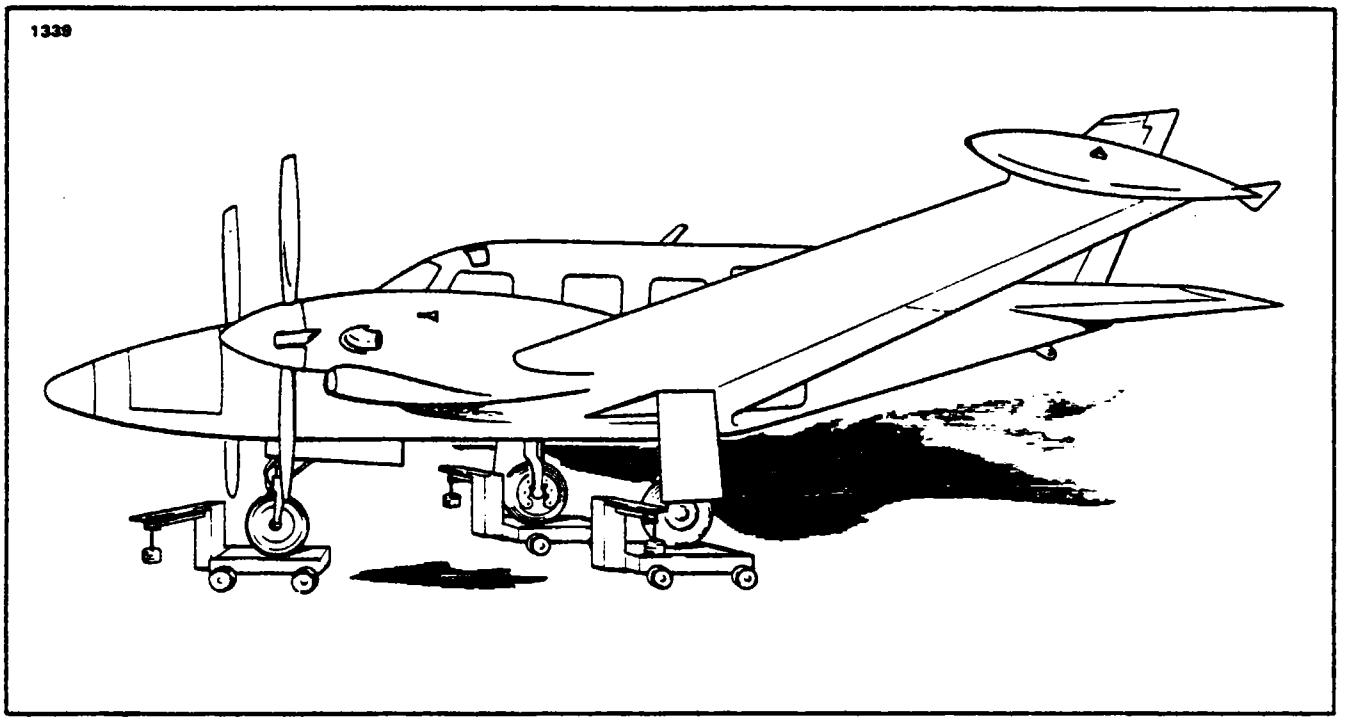

Figure 2-8. Weighing Configuration (Typical)

2-12. WEIGHING. (Refer to Figure 2-8.) The airplane may be weighed by the following procedure:

a. Position a scale and ramp in front of each of the three wheels.

b. Secure the scales from rolling forward and tow the airplane up onto the scales. (Refer to Towing, Paragraph 2-16.)

c. Remove the ramp so as not to interfere with the scales.

d. If the airplane is to be weighed for weight and balance computations, level the airplane per instructions given in Paragraph 2-13.

2-13. LEVELING. All configurations of the airplane are provided with a means for longitudinal and lateral leveling. The airplane may be leveled while on jacks during the weighing procedure, while the wheels are on scales, or while the wheels are on the ground. To level the airplane for weighing or rigging, the following procedures may be used:

a. To longitudinally level the airplane, partially withdraw the two leveling screws located on the right side of the fuselage nose section at station 48.35 and 80.25. (Refer to Figure 2-9.) Place a spirit level on these screw heads and adjust the jacks until the bubble of the level is centered.

b. To laterally level the airplane, place a spirit level across the two center seat rails of the cabin (Refer to Figure 2-9) and deflate the tire on the high side of the airplane or adjust either jack until the bubble of the level is centered.

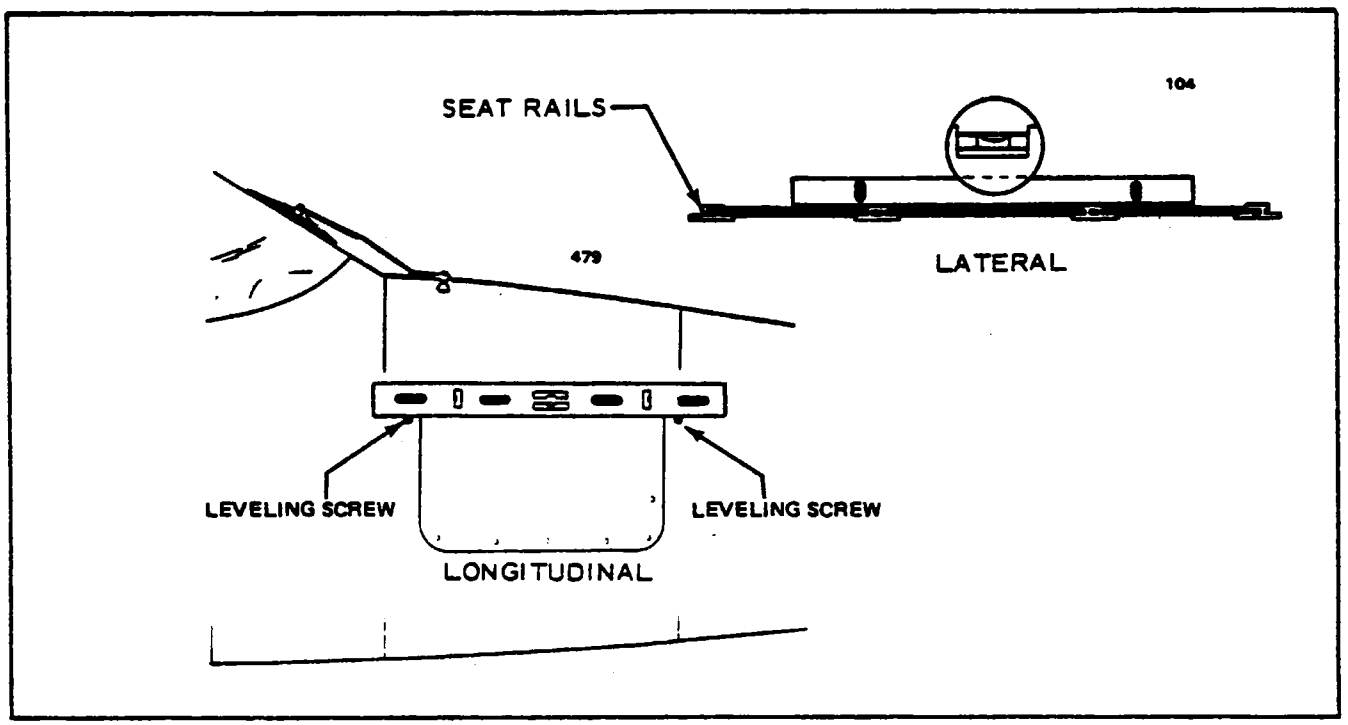

Figure 2-9. Leveling Longitudinally and Laterally

2-14. MOORING. The airplane is moored to insure its immovability, protection and security under various weather conditions. The following procedure gives the instructions for proper mooring of the airplane:

a. Head the airplane into the wind, if possible.

b. Block the wheels.

c. Secure tie-down ropes to the wing tie-down rings and the tail skid at approximately 45 degree angles to the ground. When using rope constructed of nonsynthetic material, leave sufficient slack to avoid damage to the airplane when the ropes contract due to moisture.

CAUTION

Use square or bowline knots. Do not use slip knots.

NOTE

Additional preparations for high winds include using tie-down ropes from the landing gear forks, and securing the rudder.

d. Install pitot tube cover(s) and engine inlet and exhaust covers. (Refer to Figure 2-15.) Restrain the propeller to prevent windmilling.

2-15. PARKING. When parking the airplane, insure that it is sufficiently protected against adverse weather conditions and presents no danger to other aircraft. When parking the airplane for any length of time or overnight, it is recommended that it be moored as in Paragraph 2-14.

a. To park the airplane, head it into the wind, if possible.

b. Set the parking brake by applying toe pressure against the top of the rudder pedals and at the same time pull out on the brake handle. To release the parking brake, apply toe pressure on the pedals and push in on the parking brake handle.

NOTE

Care should be taken when setting brakes that are very hot or during cold weather when accumulated moisture may freeze the brakes. Prior to setting the brakes, if either of the above conditions exist, it is recommended that chocks be used to block the wheels rather than setting brakes.

2-16. TOWING. The airplane may be moved by using power equipment that will not damage or cause excess strain to the nose gear steering assembly. Towing lugs are incorporated as part of the nose gear fork.

To pull the airplane on a hard level surface, it will require approximately 100 pounds pull to start its roll and approximately 60 pounds to maintain roll.

CAUTION

When towing, do not turn the nose gear in either direction beyond its 40 degree arc from center as this will result in damage to the nose gear and steering mechanism. A placard is installed on the nose gear strut to indicate turn limits. (Refer to Figure 2-10.)

In the event towing lines are necessary, lines (rope) will be attached to both main gear struts just below the side brace link attachments. Lines should be long enough to clear the nose and/or tail by not less than 15 feet, and a qualified person to ride in the pilot's seat to maintain control by use of the brakes and nose wheel steering.

2-17. TAXIING. Before attempting to taxi the airplane, ground personnel should be checked out by a qualified pilot or other responsible person on the engine starting and shutdown procedures and any other system functions which may be required to properly and safely move this airplane. When it is ascertained that the propeller propwash and taxi areas are clear, apply power to start the taxi roll and perform the following checks:

a. Taxi forward a few feet and apply brakes to determine their effectiveness.

b. Taxi with propellers set in low pitch, high RPM setting. Check for even prop reversing.

c. While taxiing, make slight turns to ascertain the effectiveness of the steering.

d. Observe wing clearance when taxiing near buildings or other stationary objects. If possible, station guides at each wing tip to observe.

e. When taxiing on uneven ground avoid any holes and ruts.

f. Do not operate the engines at high RPM when running or taxiing over ground containing loose stones, gravel or any loose material that may cause damage to the propeller blades.

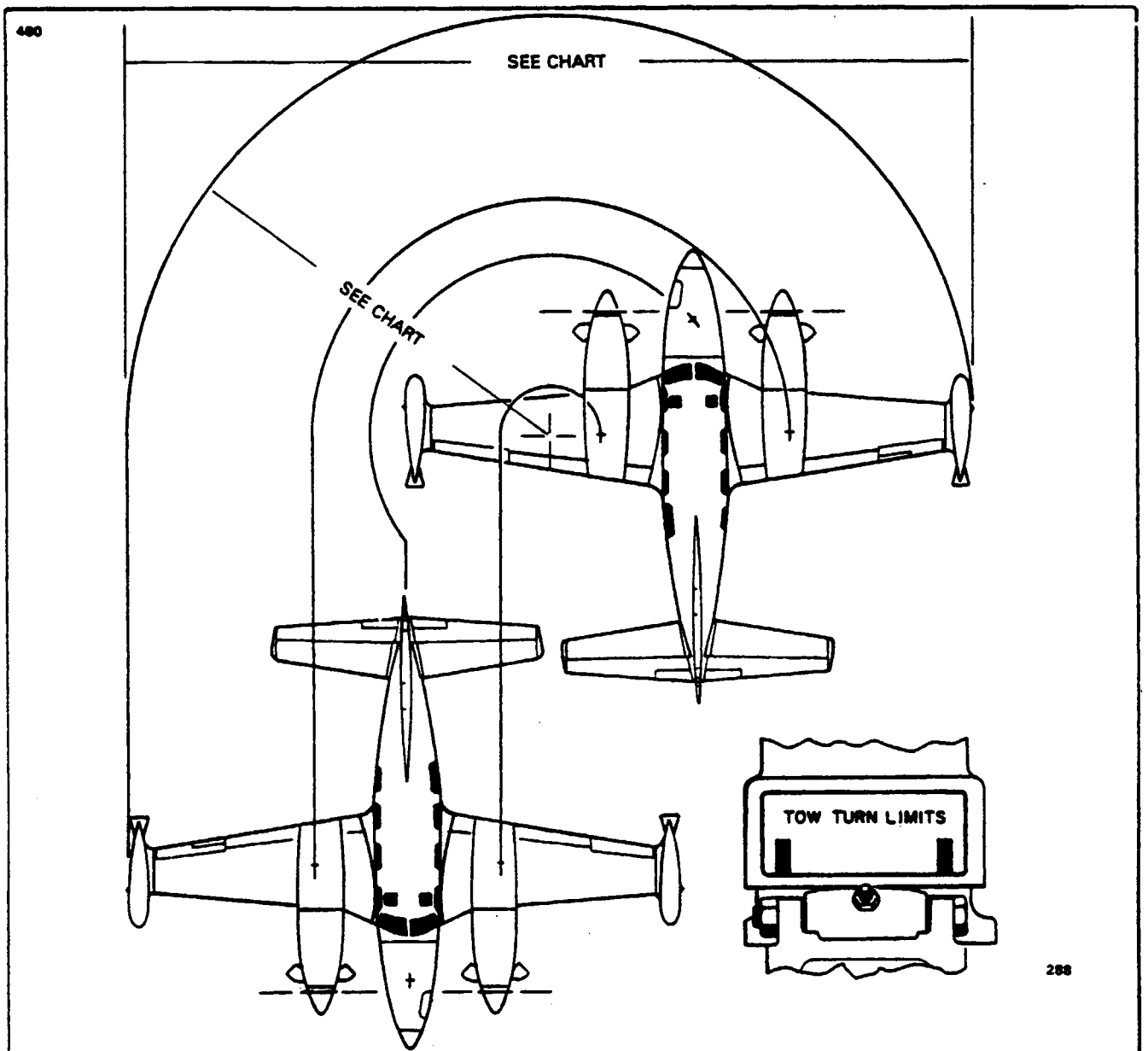

MODEL	PA-31T AND PA-31T1	PA-31T2
TURNING RADIUS - NOSE WHEEL	13' 6"	
TURNING RADIUS - WING TIP - W O TIP TANK	27' 54"	
TURNING RADIUS - WING TIP - W TIP TANK	28' 58"	34.04 FT
WHEEL BASE	8' 8"	10' 8"
NOSE WHEEL TRAVEL	40° LEFT AND RIGHT	40° LEFT AND RIGHT

Figure 2-10. Tow Turn Limits and Radius

2-18. EXTERNAL POWER RECEPTACLE.

2-19. OPERATION OF EXTERNAL POWER RECEPTACLE. The external power receptacle is located on the underside of the nose section below the forward side of the baggage compartment door. To avoid any damage to the airplane's electrical system follow the instructions on the access door of the power receptacle.

NOTE

When using a ground power unit for external power starting and the airplane's battery is nearly depleted the instructions given in Section XI must be followed.

2-20. SERVICING.

2-21. GENERAL. Servicing the airplane includes the replenishment of fuel, oil, hydraulic fluid, tire pressures, oxygen, lubrication requirements and other items required to completely service the airplane.

2-22. FUEL SYSTEM.

2-23. SERVICING FUEL SYSTEM. The handling of turbine fuel as used in this airplane requires some special attention and safety precautions which cannot be overly stated. There are several problems which are not normally associated with aviation gasolines. One is entrained water or microscopic particles of free water suspended in the fuel, another is microbial contaminants or micro-organisms which live and multiply in the water interfaces of turbine fuel. Due to these problems turbine fuel requires good fuel handling practices to assure that the airplane is serviced with clean fuel. The following steps should be used to minimize the possible introduction of contaminants into the fuel system and maintain a clean condition within the fuel cells:

a. Know the source (supplier) of the fuel to be used, ascertain that it is properly stored and filtered as it is passed from the storage area to the airplane.

b. Perform regular fuel filter inspections to determine if any sludge is present. (Microbial contamination is visible as a slime or sludge which may vary in color, red, brown, gray or black.) Micro-organisms have a tendency to mat and cause interference with fuel flow. Reference to FAA Manual AC65-9 Chapter 4 gives complete explanation on fuels and related problems.

c. It is very important to maintain a clean fuel system by periodically flushing the fuel cells to remove any contaminants within.

d. After refueling the airplane, allow a three to four hour settling period whenever possible, then drain small amounts of fuel from each drain. The benefits of a settling period will be lost, unless the accumulated contaminants within the fuel cells are drained before the airplane is moved and the fuel is disturbed by the operation of the internal fuel pumps. To reduce the accumulation of condensation within the fuel cells, it is suggested that the cells be maintained in a full condition as often as possible.

e. Inspection intervals of various fuel system components may be found in the particular Piper Continuous Inspection Manual being used. Clean the filter elements in each fuel filter unit located on the forward left side of each firewall. Remove and clean the filters in accordance with instructions outlined in Section IX of this service manual. Additional fuel system information may be found in Section IX. The various Piper Continuous Inspection Manuals are listed in Section III of this manual.

2-24. FILLING FUEL CELLS. The fuel cells in each wing are filled through the nacelle tanks. Each wing is topped off through a filler neck in each wing tip tank, if installed. Both nacelle fuel cells have individual filler necks on top of each nacelle.

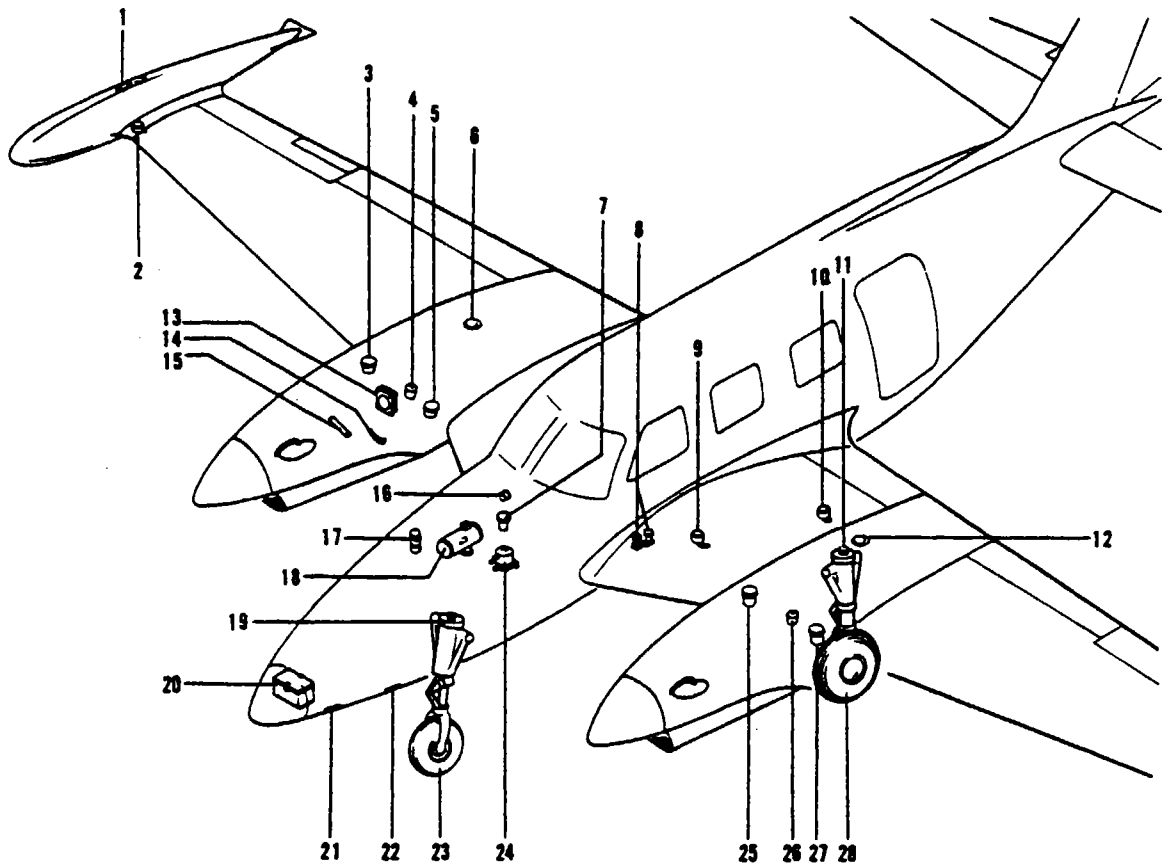

1. FUEL FILLER, TIP TANK, RIGHT AND LEFT
2. FUEL DRAIN, TIP TANK, RIGHT AND LEFT
3. FILTER, HYDRAULIC, RIGHT ENGINE
4. OIL FILLER, RIGHT ENGINE
5. FUEL FILTER, RIGHT ENGINE
6. FUEL FILLER, NACELLE TANK, RIGHT
7. HYDRAULIC BRAKE RESERVOIR
8. ELECTRIC FUEL PUMPS, RIGHT AND LEFT
9. FUEL DRAIN, MAIN INBOARD, RIGHT AND LEFT
10. FUEL DRAIN, MAIN OUTBOARD, RIGHT AND LEFT
11. FILLER, OLEO SHOCK STRUT, RIGHT AND LEFT
12. FUEL FILLER, NACELLE TANK, LEFT
13. COMPRESSOR, AIR CONDITIONER
14. HOSE, ENGINE OIL DRAIN, RIGHT AND LEFT
15. FILTER ELEMENT, ENGINE OIL, RIGHT AND LEFT
16. GAUGE, OXYGEN PRESSURE
17. AIR CONDITIONER, RECEIVER DRYER
18. HEATER
19. FILLER, OLEO SHOCK STRUT, NOSE
20. BATTERY
21. EXTERNAL POWER SUPPLY
22. FILLER OXYGEN
23. TIRE, NOSE
24. POWER PACK
25. FILTER, HYDRAULIC, LEFT ENGINE
26. OIL FILLER, LEFT ENGINE
27. FUEL FILTER, LEFT ENGINE
28. TIRE, MAIN, RIGHT AND LEFT

Figure 2-11. Service Points

CAUTIONS

1. Do not open the nacelle filler caps with more than 2 inches of fuel in the tip tanks. This would result in fuel spillage.
2. Always connect a static ground cable from the refueler to the airplane. Keep all grounding connections clean, they should never be allowed to become corroded or covered with paint etc.

When refueling never leave the fuel nozzle unattended. When refueling has been completed, disconnect the ground cable and insure that all filler caps are properly installed.

2-25. DRAINING MOISTURE FROM FUEL SYSTEM. To facilitate draining the fuel system filter bowls, lines and fuel cells of moisture and foreign matter, drains are incorporated in the bottom of each filter bowl, wing tip tank, if installed, main outboard fuel cell and main inboard fuel cell. The nacelle fuel cells drain into the main fuel cells and thus do not have individual external drains.

a. To drain either filter bowl, open the access door located on the left rear side of each engine cowl and push down on the drain valve arm a few seconds. Allow enough fuel to flow each time to clear the filter bowl.

CAUTION

To prevent ramp surface contamination and possible fire damage, immediately remove any fuel spilled on the ramp area etc.

b. To drain off water in the fuel cells, push up on the arms of each cell drain and allow fuel to flow for a few seconds. There are three drains on the bottom of each wing, one for each tip tank, if installed, one for each main outboard cell and one for each main inboard cell.

NOTE

To insure the removal of moisture from each fuel drain, allow the fuel to settle if possible for three to four hours. Refer to Paragraph 2-23 step d.

2-26. DRAINING FUEL SYSTEM. The bulk of the fuel may be drained from the system by using a suitable suction system with the hose placed down through the nacelle filler neck. The fuel may be drained from the fuel filter bowls by activating the individual filter drains. Each wing may be drained separately providing the crossfeed valve is in the OFF position.

2-27. PROCEDURE FOR REMOVING BIOLOGICAL FUEL CONTAMINATION. Fuel system contamination is more of a potential problem in a turbine fuel system than in fuel systems using aviation gasoline, and the reason for this increase in potential is turbine fuels greater affinity for water. Micro-organisms grow in the interface between the individual water droplets and the fuel. If there is no water in the fuel there will be no place for these organisms to grow. Because the by-products by this form of contamination will attach the metal components, it is imperative that the fuel system be kept clean and periodically inspected to assure that the fuel system is free of water and any other foreign matter. In the event that biological contamination is encountered, as evidenced by the presence of a red, brown, grey or black slime in the aircrafts fuel tanks, lines, pumps and filters, all the systems components must be thoroughly cleaned with the lowest octane aviation gasoline available. Proceed as follows:

a. Level the aircraft.
b. Defuel the affected wing(s).

NOTE

Use a container designed for use with contaminated fuel only.

CAUTION

Be sure to follow proper grounding procedures and safety precautions.

c. Remove all sump drains on the affected side(s) and assure that all fuel has been removed.
d. Remove the bottom wing root fairing.
e. Remove the fuel cell and tank access covers on the wing upper surface.
f. Remove both boost pumps.
g. Remove cowling of affected engine(s).
h. Remove the firewall mounted fuel filter and the engine driven fuel pumps inlet and outlet filters. Clean or replace as required.
i. Remove the heater filters and nozzle and clean or replace as required.
j. Clean all fuel filter bowls and housings with aviation gasoline and inspect these components for signs of etching. If etching is discovered, replace the affected component.
k. Remove the access covers from the fuel cell or cells which require cleaning. Using Stoddard solvent and a soft bristle brush scrub the affected cell or cells.

CAUTION

The brush should have a lanyard attached to it with the other end attached to the person doing the cleaning, to prevent possibility of leaving the brush within the cell.

A tack rag should be used to remove any particles of contamination left in the fuel cell. The same caution and suggestions as stated above would apply to the use of the tack rag. Upon completion of the fuel cell cleaning and insuring that no equipment is left within the fuel cell or cells, reinstall all the access covers removed.

l. With the lowest octane aviation gasoline available thoroughly flush all fuel cells, tanks, connecting fuel lines and boost pumps.

m. Inspect all fuel cells, tanks, pumps and lines for evidence of deterioration. The micro-organisms will attack the metal components, harm the fuel tank coating and then etch the underlying metal.

n. Reinstall both boost pumps and safety.

o. Reinstall all sump drains.

p. Reinstall the firewall mounted fuel filters bowl(s) without the filter elements.

q. Reinstall both filter elements and bowls on the engine driven fuel pump(s) and safety.

r. Flush the system in accordance with the following procedure:

1. Disconnect the fuel line between the fuel flow transmitter and engine driven fuel pump at the fuel pump. Disconnect the fuel line to the heater solenoid shut-off valve. Attach suitable hoses to the disconnected fuel lines, then place the free ends in the fuel container used for contaminated fuel.

2. Add eight gallons (U.S.) of aviation gasoline to the affected side(s).

3. Pull all circuit breakers except those controlling the fuel boost pumps and heater.

4. Place the master switch in the ON position and turn the number one boost pump and heater fuel switch in the ON position.

5. After pumping out two gallons (U.S.) of aviation gasoline with the number one pump, turn on the number two boost pump. Be sure to observe the fuel coming from the disconnected heater fuel line. Actuate the crossfeed valve to be sure the heater and crossfeed lines are clean.

NOTE

If the right wing part of the system is the only contaminated portion, be certain that the crossfeed valve and the line is adequately flushed by disconnecting the crossfeed line at the crossfeed valve on the left wing side. Drain the fuel into the contaminated fuel container.

s. Check all lines and fittings for leaks.

t. Continue to pump aviation gasoline through the system until the fuel going into the contaminated fuel container is clean.

u. Reinstall the filter element(s) in the firewall mounted fuel filter(s) and safety.

v. Reinstall the heater fuel filter and safety.

w. Reconnect the fuel line(s) between the fuel flow transmitter(s) and engine driven fuel pump(s).

x. Reconnect the heater fuel line to the shut-off valve.

y. Check the complete system for leaks.

z. Reinstall the bottom wing root fairings and fuel cell and tank access covers.

aa. Reinstall the engine(s) cowling(s).

ab. Fill the affected fuel cell(s) with 30 gallons (U.S.) each of the lowest octane aviation gasoline available; then run the engines to consume the fuel. Observe all cautions when operating the engines.

NOTE

Make an appropriate logbook entry stating the time that each engine has been run on aviation gasoline. Refer to the latest revision of Pratt and Whitney Service Bulletin No. 1244 on Engine Fuels and Additives.

ac. Inspect the firewall mounted fuel filter(s) after operating the engine(s) for evidence of microbiological contamination. If contamination is present repeat the cleaning procedure.

ad. Clean the fuel filter(s), reinstall and safety.

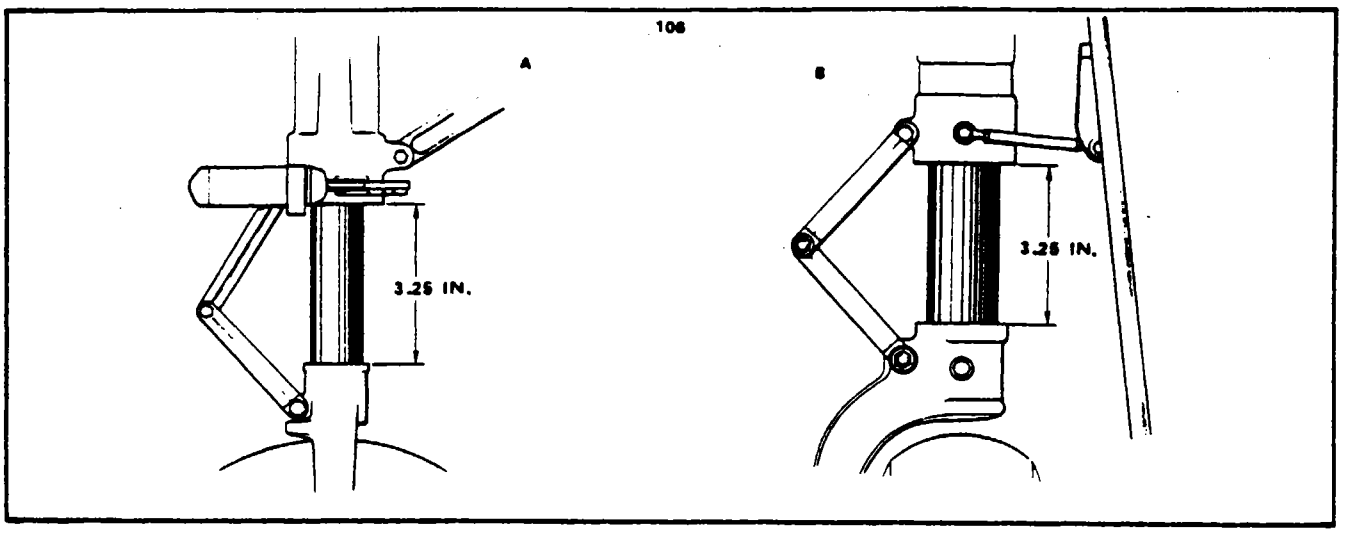

Figure 2-12. Servicing Landing Gear Shock Struts

2-28. BRAKE SYSTEM.

2-29. SERVICING BRAKE SYSTEM. The brake system incorporates a hydraulic fluid reservoir through which the brake system is periodically serviced. Fluid is drawn from the reservoir by the brake master cylinders to maintain the volume of fluid required for maximum braking efficiency. Spongy brake pedal action is often an indication that the brake fluid reservoir is running low on fluid or air is in the system. Instructions for filling the reservoir are given in Paragraph 2-30. When found necessary to accomplish repairs to any of the brake system components or bleed the system, refer to the instructions given in Section VII. For inspection of brake wear limits, refer to Section VII and the specific information for the affected B.F. Goodrich brake assembly.

2-30. FILLING BRAKE CYLINDER RESERVOIR. The brake cylinder reservoir should be filled to the level marked on the dipstick with MIL-H-5606 hydraulic fluid. The reservoir, located in the upper nose section above the power pack shown in Figure 2-11, should be checked at every 50 hour inspection and replenished as necessary. No adjustment of the brakes is necessary, though they should be checked periodically per instructions given in Section VII.

2-31. DRAINING BRAKE SYSTEM. To drain the brake system, connect a hose to the bleeder fitting on the brake housing and place the other end of the hose in a suitable container. Open the bleeder valve and slowly pump the brake pedal until fluid ceases to flow. To clean the system, flush with denatured alcohol.

2-32. OLEO STRUTS.

2-33. SERVICING OLEO STRUTS. Air-oil shock struts are incorporated in each landing gear oleo assembly to absorb the shock resulting from the impact of the wheels on the runway during landing. To obtain proper oleo action, the nose and main gear oleo struts must have approximately 3.25 inches of piston tube exposed, with the airplane setting on a level surface, under normal static loads. (Refer to Figure 2-12.)

NOTE

Normal static load is the empty weight of the airplane plus full fuel and oil.

If a strut has less than the required inches exposed, determine whether it needs air or oil by rocking the airplane. If the airplane settles to its normal position within one cycle after the rocking force is removed, the oleo strut requires inflating (air). (Refer to Paragraph 2-36.) If the airplane continues to oscillate after the rocking force is removed, the oleo struts requires filling (oil). (Refer to Paragraph 2-35.) For repairs to the gear oleos, refer to Section VII of this manual.

WARNING

Do not release air by removing the strut valve core or filler plug.
Depress the valve core pin until strut pressure has diminished.

NOTE

Struts may be serviced and adjusted per placard on strut.

2-34. ADDING FLUID TO STRUTS. To add fluid to an oleo strut which is partly full, proceed as follows:

a. Place the airplane on jacks. (Refer to Paragraph 2-11.)
b. Place a pan under the gear to catch spillage.
c. Release the air in the oleo strut by pressing in on the air valve core pin.
d. Remove the air valve (filler plug). Allow valve core to remain in valve.
e. Extend the strut to two inches from the fully compressed position.
f. At the two inch extended position, fill the strut through the filler opening with MIL-H-5606 fluid.
g. Slowly compress the strut to the fully compressed position allowing fluid to overflow.
h. With oleo strut in the compressed position, reinstall air valve and safety.
i. Inflate the oleo struts with air to the required extension per instructions in Paragraph 2-36.

2-35. FILLING OLEO STRUTS. To fill an oleo strut which has been completely emptied because of repair leakage, etc., proceed as follows:

a. Place the airplane on jacks. (Refer to Paragraph 2-11.)
b. Place a pan under the gear to catch spillage.
c. Remove valve core from air valve.
d. Attach a clear plastic tube to the valve stem and place the other end of the tube in a container of hydraulic fluid as specified.

NOTE

An air-tight connection is necessary between the plastic tube and valve stem. Without such a connection, a small amount of air will be sucked into the oleo strut during each sequence, resulting in an inordinate amount of air bubbles and a prolonged filling operation.

e. Extend the oleo strut by pulling down on the wheel. Fluid will be sucked into the oleo strut. Compress and extend the oleo strut until it is full of fluid, and air bubbles cease to appear in the plastic tube.
f. Compress the oleo strut to within 1/4 inch of full compression, allowing the excess fluid to overflow.
g. With the oleo strut in the near compressed position, reinstall the valve core.
h. Remove the airplane from the jacks.
i. Inflate the oleo struts per instructions given in Paragraph 2-36.

2-36. INFLATING OLEO STRUTS. After making certain that an oleo strut has sufficient fluid, as described in Paragraph 2-34, attach a strut pump to the air valve and pump up the oleo strut. The oleo struts should be inflated until 3.25 inches of piston is exposed with normal static weight (Normal static weight is the empty weight of the airplane plus full fuel and oil.) on the gear. Before capping the valve, check for valve core leakage.

2-37. LANDING GEAR.

2-38. SERVICING LANDING GEAR. The operation of the landing gear oleos is standard for the air-oil type. The piston tube has a total travel of 8.50 inches, and 3.25 inches of tube exposed under normal static load. (Normal static load is the empty weight of the airplane plus full fuel and oil.) All major attachments and actuating bearings are equipped with grease fittings for lubrication. Refer to Lubrication Chart.

2-39. TIRES.

2-40. SERVICING TIRES. The tires should be maintained at the pressure specified in Table II-I. When checking tire pressure, examine the tires for wear, cuts, bruises and slippage.

2-40a. TIRE BALANCING. Proper balancing is critical for the life of the aircraft tires. If a new tire is balanced upon installation it will usually remain balanced for the life of the tire without having any shimmy or flat spots, and an inexpensive balancer can be made that will balance almost any tire for light aircraft. (Refer to Paragraph 2-40b for fabrication instructions.) Balance the tire as follows:

a. Mount the tire and tube (if one is used) on the wheel, but do not install the securing bolts. Install the wheel bearings in the wheel; then, using the -7 bushings, -6 spacers, and -5 nuts, install the wheel-tire assembly on the -8 pipe. Secure the -5 nuts finger-tight so that the wheel halves touch each other. Be sure the bolt holes are aligned! Insert the -4 axle through the -8 pipe and place the wheel in the center of the balancer. Make sure the axle is only on the chamfered edges of the balancer and that it is at 90° to the sides of the balancer.

b. Release the tire. If it is out of balance it will rotate, coming to rest with the heaviest point on the bottom. Tape a 1/2 ounce patch across top center of the tire. Rotate the tire 45° and release it again. If the tire returns to the same position, add a 1 ounce patch and again rotate the tire and release it. Continue this procedure until the tire is balanced.

c. When balance is attained, put a chalk mark on the sidewall directly below the patch. Use one mark for each half ounce of weight needed. Mark the valve stem location on the tire and the opposite wheel half to assure reassembly in the same position. Remove the wheel from the balance stand, break it down, and clean the tire with toluol. Apply a coat of patch cement to both the patch and the inside center of the tire in line with the chalk marks. When the cement has dried, install the patches making certain they are on the center line of the tire and aligned with the chalk marks on the sidewall. Burnish the patches to remove trapped air, etc.

d. When reassembling the wheel, powder the inside of the tire. Mount the tire on the valve side of the wheel in the same position it was in when it was balanced. Install the other wheel half, aligning the chalk marks. Install the bolts and tighten to required torque, then air the tire and recheck the balance. The wheel should not be more than 1/2 ounce out of balance.

2-40b. CONSTRUCTION OF TIRE BALANCER. (Refer to Figure 2-12a.)

a. The following instructions will help in building the balancer: chamfer top edges of -3 sides, leaving 1/16 inch flat on top inboard edge. Rivet -2 tee's to -3 sides using AN470-AD5 rivets 2" spacing. Use AN426-AD5 rivets 2" center to center to secure -2 tee's to -1 base. If tee extrusion is unavailable, heavy angle extrusion could be used; -3 sides must be paralled and vertical.

b. The -4 axle must slide through the -8 pipe. The -5 nuts were made by reaming the existing threads in the AN365-624 nuts with an R drill, then tapping with a 1/8-27 pipe tap.

c. The -6 spacers were made from 1/2 inch aluminum tubing. The two lengths of spacers are suitable for balancing most any aircraft wheel.

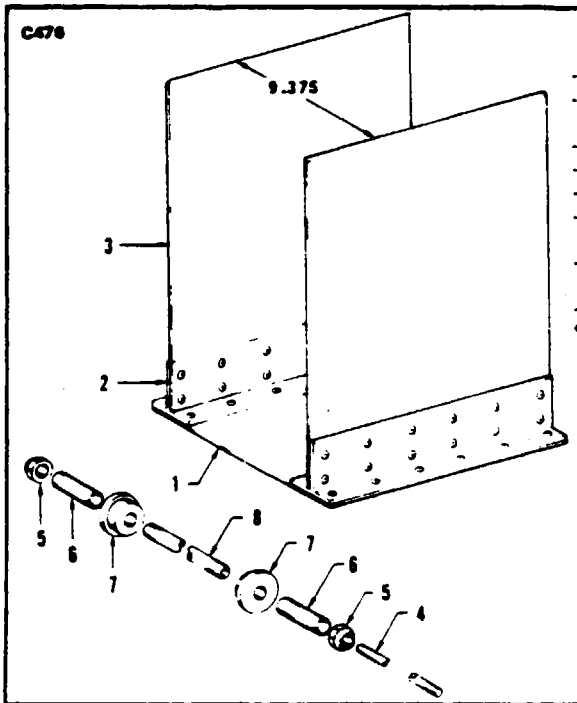

-1.	1 ea. Base	12 x 11	0.190 2024 T3 clad aluminum alloy
-2	2 ea. Tee	2.5 x 2 x 11	0 190 2024 T4 extruded aluminum alloy
-3.	2 ea. Sides	14 x 11	0.125 2024 T3 clad aluminum alloy
-4.	1 ea. Axle	0.125 x 10.25	4130 steel, normalized
-5.	2 ea. Nuts	AN 365-624	
-6	2 ea. Spacer	0.50 x 2.25	5052-0 aluminum tubing
	2 ea. Spacer	0 50 x 1.25	5052-0 aluminum tubing
-7.	2 ea. Bushing	1.480 x 1.625 x 1.00	phenolic or aluminum
	2 ea. Bushing	2.240 x 1.37 x 1.00	phenolic or aluminum
-8.	1 ea. Pipe	1/8 x 9 3	black steel pipe
*	2 ea. Bearings	Save two of each size worn wheel bearings from previous inspections	

Figure 2-12a. Tire Balancer

d. The -7 bushing may be benchmade from one inch phenolic or aluminum using a 1½ inch hole saw to cut out the smaller bushing and a 1¾ hole saw to cut out the larger. By inserting a 1/4 inch long threaded bolt through the pilot hole and securing with a washer and nut, a drill press and file may be used to make the off-set on the bushing. The turned-down part should just slide inside the bearing race. Ream the pilot hole to slide over the -8 pipe threads.

e. The -8 pipe was made from a piece of 1/8 inch black pipe and threaded with a 1/8-27 pipe die. Thread 3 inches in from each end of the pipe.

2-41. HYDRAULIC SYSTEM.

2-42. SERVICING HYDRAULIC BRAKE SYSTEM. The fluid level in the brake reservoir should be checked in accordance with the particular Inspection Manual being used. Access to the reservoir is through the access door on the upper right portion of the nose section. If the fluid level is low, it should be filled with filtered hydraulic fluid MIL-H-5606 only.

2-43. SERVICING HYDRAULIC POWER PACK. The hydraulic power pack reservoir fluid level should be checked in accordance with the particular Inspection Manual being used and filled as necessary whenever the fluid level in the reservoir is low. Special filling and draining service hookup has been installed just inside the right fuselage access panel of the nose section. A pressure pot or hydraulic test unit can be connected to this installation by removing the access panel and the protective cap on the suction, fill and drain fitting. Connect the fluid supply line from the supply source to the fitting; then raise the lever to open the valve and proceed to fill the reservoir. To gravity fill the reservoir, support the supply container of hydraulic fluid higher than the fluid level in the power pack reservoir. The reservoir is full when fluid is visible through the sight gauge or when the fluid reaches the full line on the transparent type reservoirs. Be sure to close the suction, fill and drain valve by placing the lever in the down position before disconnecting the supply line from the fitting. Reinstall the protective cap on the fitting and install the access panel.

2-44. PROPELLER.

2-45. SERVICING PROPELLER. The blades should be checked periodically for damage. Minor nicks in the leading edge of blades should be filed out and all edges rounded. Daily inspection should include examination of blades and spinner for visible damage and grease leakage. For further information on propeller servicing, refer to Section VIII, Section VIIIA, or FAA AC 43.13-1A, Section III on propeller repairing.

2-46. ELECTRICAL SYSTEM.

2-47. SERVICING ELECTRICAL SYSTEM. There is little service required for the electrical system, other than making visual and operational checks of the various equipment. For more detailed information on servicing and repair of the various components refer to Section XI.

2-48. LUBRICATION SYSTEM (ENGINE).

2-49. SERVICING LUBRICATION SYSTEM. The engine oil level should be checked within 10 minutes after engine shutdown. If the engine has been stationary for a period of twelve hours or more, it should be started and run at idle for a minimum of two minutes; then shut down and check oil level.

NOTE

If the engine has been stationary for more than 10 minutes before checking oil level, a dry motoring run must be performed.

For engines operated in corporate or utility aircraft with a typical utilization of 50 hours per month or less, it is recommended that the oil be changed every 400 hours or 9 months, whichever occurs first. For engines operated in high utilization commuter airline type operation, a basic oil change period of 800 hours for 7-1/2 centistokes, or 1200 hours for a 5 centistoke oil, or 9 months whichever occurs first. Extensions beyond the basic oil change period may be contemplated provided that the condition of the oil is monitored such as by a spectrometric oil analysis and a written request is submitted to the Pratt and Whitney Aircraft of Canada Limited Service Department. When operation will result in frequent cold soaking at ambient temperatures of 0°F (-18°C) or lower, the use of a 5 centistoke oil is recommended. For further information, consult the latest revision of Pratt and Whitney Engine Service Bulletin No. 1001 for the PA-31T, PA-31T2 and for the PA-31T1 Service Bulletin No. 12001. The total system capacity is 2.3 U.S. gallons.

CAUTION

Do not mix different brands of oil or specifications of oil since the chemical structures may be different, making the oils incompatible.

If the oil brand is to be changed, the lubrication system must be flushed as follows:

a. Completely drain the engine oil. (Refer to Paragraph 2-55.)
b. Motor the engine with the starter for a few seconds to scavenge the oil system.

CAUTION

Limit engine rotation to a minimum to accomplish draining.

c. Reinstall the drain plugs in the engine and oil cooler and refill the engine oil tank with the brand of oil to be used.

NOTE

When filling the oil tank, it is recommended that the oil be strained before entering the engine to eliminate the possibility of foreign material in the engine.

d. Start the engine and idle for a minimum of two minutes.
e. Shut down the engine and completely drain the system.
f. Reinstall all drain plugs and refill the oil tank with the new oil.
g. Start the engine and idle for a minimum of two minutes. Shut down the engine and check the oil level; refill as required.

2-50. OIL LEVEL CHECK. Within 10 minutes after engine shutdown, unlock the filler cap at the 11 o'clock position on the accessory gearbox housing. Check the contents of the tank against the marks on the dipstick which correspond to U.S. quarts and fill to required level.

NOTE

Normal oil level is one U.S. quart below maximum level. DO NOT fill oil tank more than one quart below the maximum mark.

CAUTION

If oil level in tank is below the bottom of the dipstick, determine the cause to assist in troubleshooting. If neither fluctuating nor low oil pressure readings have been noticed, check for external leaks and oil filter contamination. Clean oil filter and fill oil tank to recommended level. Record quantity of oil added and carry out a 15 minute engine run; then recheck the oil quantity and condition of oil filter. If both are satisfactory, no further action is necessary, otherwise refer to the Engine Maintenance Manual.

2-51. CHIP DETECTOR/DRAIN PLUG. The magnetic chip detector is located in the same place as the drain plug on the reduction gearbox. A protective cover is installed over the chip detector test terminals. To check the chip detector for electrical continuity use any utility volt ohmmeter, and make a continuity check across the chip detector terminals. If continuity is indicated, the chip detector should be removed and the magnetic pole pieces inspected for type of contaminants.

NOTE

Whenever the chip detector is removed for inspection, the oil filter should also be inspected.

2-52. REMOVAL OF CHIP DETECTOR.
a. Remove the protective cover from the chip detector.
b. Remove the chip detector from the gearbox and discard the preformed packing.

2-53. INSPECTION OF CHIP DETECTOR.

a. If only a single chain of magnetic particles bridge the gap across the poles of the detector and the particles consists of small slivers, clean the chip detector by wiping with a lint-free cloth and reinstall per Paragraph 2-54.

b. If more than 10 pieces of small, nugget shaped magnetic material is evident on the detector the engine should be shipped to an overhaul facility for inspection.

c. When a small amount of fuzz (powdered material) is evident, clean the detector and reinstall per Step a and recheck for continuity after 10 hours of operation.

d. Should fuzz be found the second time, but the quantity has not increased, clean the detector, reinstall and make an other continuity check after an additional 10 hours of operation.

e. When fuzz is found a third time in similar or greater quantities the engine should be shipped to an overhaul facility for inspection.

2-54. INSTALLATION OF CHIP DETECTOR.

a. Install the chip detector with a new preformed packing in the boss on the reduction gearbox.

b. Tighten and torque the detector to 45 to 55 inch-pounds.

c. Install the chip detector cover and tighten finger tight plus 45 ° maximum. Safety wire the cover and detector to the gearbox.

2-55. CHANGING OIL.

a. Remove engine cowling and place a suitable container or drip pan under engine.

b. Remove oil drain plug or chip detector (Refer to Paragraph 2-51 for chip detector service information), located at the 6 o'clock position on the reduction gearbox front case.

c. Detach the accessory gearbox housing oil drain hose from the engine mount tube and remove the oil drain plug from the end of the hose. Remove the drain plug from the oil cooler.

d. Motor the engine for a few seconds with the starter only (ignition and fuel off), to scavenge the oil system.

CAUTION

Limit engine rotation to a minimum to accomplish draining.

e. Reinstall the drain plug in the accessory gearbox drain hose and torque. Secure the hose to the engine mount with the appropriate clamp.

f. Install drain plug in the reduction gearbox using new O-rings; torque 215 to 240 inch-pounds and lockwire.

g. Install drain plug in oil cooler; torque plug and safety.

h. Refill the oil tank with specified oil. (Refer to latest revision of Pratt and Whitney Service Bulletin No. 1001 for PA-31T, PA-31T2 and Service Bulletin No. 12001 for PA-31T1.) Normal oil level is one U.S. quart below the maximum level. Overfilling may cause excess oil to flow through the accessory gearbox breather.

i. Motor the engine to obtain an oil pressure reading.

CAUTION

Do not exceed the starter time limits, (30 seconds, ON, 1 minute OFF, 30 seconds ON, 1 minute OFF, 30 seconds ON, 30 minutes OFF.)

2-56. SERVICING OIL FILTER ELEMENTS. The standard non-cleanable type filter element, P/N 3024084 is available from spare parts sales.

CAUTION

Maintenance personnel should not attempt to clean and reuse the standard non-cleanable type filter elements, P/N 3024084. They must be replaced after every 1000 hours of use.

The cleanable type filter elements should be removed and cleaned after every nine months or 400 hours of use, whichever comes first. The filter should be removed, cleaned and inspected using approved equipment by an overhaul facility after every 30 months or 1500 hours of use, whichever comes first. For removal, cleaning and installation procedures refer to Section VIII or Section VIIIA.

2-57. RECOMMENDATIONS FOR CHANGING OIL. (Refer to the latest revision of Pratt and Whitney Engine Service Bulletin No. 1001 for PA-31T, PA-31T2 and Service Bulletin No. 12001 for PA-31T1.)

a. Major factors governing oil change periods are engine mechanical condition, climatic conditions, dust and sand ingestion during takeoff and landing roll, engine utilization and possible shelf life limitations of synthetic lubricants.

b. Whenever the oil is changed, remove and check the oil filter element for metal particles. Clean and reinstall or replace depending on time in service. (Refer to Paragraph 2-56.)

c. No other oils are approved for commercial use othen than the ones listed in the latest revision of Pratt and Whitney Service Bulletin No. 1001 or 12001.

2-58. LUBRICATION.

2-59. LUBRICATION INSTRUCTIONS. Proper lubrication procedures are of immeasurable value both as a means of prolonging the service life of the airplane and as a means of reducing the frequency of extensive and expensive repairs. The periodic application of recommended lubricants to their relevant bearing surfaces, as detailed in the following paragraphs, together with the observance of cleanliness, will insure the maximum efficiency and utmost service of all moving parts. Lubrication instruction regarding the locations, time intervals, and type of lubricants used may be found in Charts 2-1 thru 2-3. To insure the best possible results from the application of lubricants, the following precautions should be observed:

a. Use recommended lubricants. Where general purpose lubricating oil is specified, but unavailable, clean reciprocating engine oil may be used as a satisfactory substitute.

b. Check the components to be lubricated for evidence of excessive wear and replace them as necessary.

c. Remove all excess lubricants from components in order to prevent the collection of dirt and sand in abrasive quantities capable of causing excessive wear or damage to bearing surfaces.

2-60. APPLICATION OF GREASE. Care must be taken when lubricating bearings and bearing surfaces with a grease gun, to insure that gun is filled with new, clean grease of the grade specified for the particular application before applying lubricant to the grease fittings.

a. Where a reservoir is not provided around a bearing, apply the lubricant sparingly and wipe off any excess.

b. Remove wheel bearings from the wheel hub and clean thoroughly with a suitable solvent. When repacking with grease, be sure the lubricant enters the space between the rollers in the retainer ring. Do not pack the grease into the wheel hub.

c. Use extra care when greasing the Hartzell propeller hub to avoid blowing the clamp gaskets. Remove one grease fitting while applying grease to the other fitting.

2-61. APPLICATION OF OIL. Whenever specific instructions for lubrication of mechanisms requiring lubrication are not available, observe the following precautions:

a. Apply oil sparingly, never more than enough to coat the bearing surfaces.

b. Since the cables are sufficiently coated by the manufacturer, additional protection for the prevention of corrosion is unnecessary.

2-62. LUBRICATION OF THREADS. All fittings on external lines, including their points of attachment at the engine and other components, should be lubricated with the proper lubricant as specified in Table II-IV.

The following steps should be followed when applying thread lubricants:

a. Thoroughly clean threads before applying lubricant.
b. Use selected thread lubricant sparingly.
c. Apply thread lubricant to male threads only.
d. Lubricate the first three threads on straight fittings.
e. Do not lubricate the first two threads on tapered fittings. Apply the lubricant to the next three threads only.
f. Ascertain that lubricant does not enter fittings or flared areas.
g. Any fittings going to the engine should be lubricated with the type of fluid going through the lines.

2-63. LUBRICATION OF GASKETS AND SEALS. Gaskets and O-ring seals which require lubrication should be lubricated with the same type of fluid they are sealing.

2-64. LUBRICATION CHARTS. The lubrication charts consists of individual illustrations for the various aircraft systems, and each component to be lubricated is indicated by a number which references the component, type of lubrication and frequency of lubrication in hours. Special instructions are listed at the beginning of the lubrication charts and referenced on the particular chart.

2-65. ENGINE ACCESSORY DRIVE SHAFTS LUBRICATION. The accessory drive shafts should be lubricated according to the latest revision of Pratt and Whitney Maintenance Manual, (refer to Table II-VIII for appropriate Pratt and Whitney Maintenance Manual).

The specific accessories are:

1. Freon Compressor (entire shaft)
2. Starter Generators
3. Tach Generators
4. Hydraulic Pumps

Lubricant should not be applied to the following accessories, should they be removed for any reason:

1. Fuel Pumps
2. Prop Governors (CSU)
3. Fuel Control Units

The overspeed governor should be installed with a dry shaft or lubricated with clean turbine engine oil.

TABLE II-IV. THREAD LUBRICANTS

TYPE OF LINE	TYPE OF LUBRICANT
Brakes	MIL-H-5606
Deicer (Air)	TT-A-580 (JAN-A-669), Anti-Seize Compound (White Lead Base)
Freon	TT-A-580 or MIL-T-5544, Anti-Seize Compound
Fuel	MIL-T-5544, Anti-Seize, Graphite Petrolatum
Oil	MIL-G-6032, Lubricating Grease (Gasoline and Oil Resistant)
Oxygen	MIL-T-5542, Thread Compound, Anti-Seize and Sealing, Oxygen System
Pitot and Static	TT-A-580 (JAN-A-669), Anti-Seize Compound (White Lead Base)
Engine - Bleed Air	C5-A High Temperature Anti-Seize Compound
NOTE: Lubricate engine fittings only with the fluid contained in the particular lines.	

SPECIAL INSTRUCTIONS

1 BEARINGS AND BUSHINGS - CLEAN EXTERIOR WITH A DRY SOLVENT BEFORE RELUBRICATING.
2. OIL COOLER DOOR, ICE PROTECTION TRANSMISSION AND SCREWS, TRIM SCREWS AND WHEEL BEARINGS - DISASSEMBLE AND CLEAN WITH A DRY SOLVENT, WHEN REASSEMBLING TRANSMISSIONS, LUBRICATE AND APPLY A THIN COATING TO SCREW
3. OLEO STRUTS, POWER PACK RESERVOIR AND BRAKE RESERVOIR - FILL PER INSTRUCTIONS ON UNIT OR CONTAINER, OR REFER TO SERVICE MANUAL, SECTION II.
4. PROPELLER - REMOVE ONE OF TWO GREASE FITTINGS FOR EACH BLADE. APPLY GREASE THROUGH FITTING UNTIL FRESH GREASE APPEARS AT HOLE OF REMOVED FITTING
5. LUBRICATION POINTS - WIPE ALL LUBRICATION POINTS CLEAN OF OLD GREASE, OIL, DIRT, ETC., BEFORE RELUBRICATING.
6. CLEAN OR REPLACE OIL FILTER ELEMENT AT EACH OIL DRAIN PERIOD AS DESCRIBED IN SECTION VIII OR SECTION VIIIA, IN AIRCRAFT WITH A TYPICAL UTILIZATION OF 50 HOURS/MONTH OR LESS, CHANGE ENGINE OIL EVERY 400 HOURS OR 9 MONTHS, WHICHEVER COMES FIRST, REFER TO THE LATEST REVISION OF PRATT AND WHITNEY, SERVICE BULLETIN NO 1001 FOR A LIST OF APPROVED OILS FOR THE PA-31T AND PA-31T2 AND REFER TO SERVICE BULLETIN NO. 12001 FOR THE PA-31T1.
7 LOOSEN BOOT FROM GEAR LOCK ROD ASSEMBLY AND GREASE TUBE. TUBE MUST SLIDE FREE TO SLOT LIMITS. REFER TO THE LATEST REVISION OF PIPER SERVICE LETTER NO 755.
8 FOR PROPER SERVICING TO ROD ENDS, REFER TO FIGURE 5-2.
9. PIPER SYSTEM ONLY - FILL TRANSMISSION GEAR BOX 75% MIN. FULL WITH DUKES P/N 2196-74-1 LUBRICANT.
CALCO SYSTEM ONLY - LUBRICATED FOR THE LIFE OF THE TRANSMISSION DO NOT DISASSEMBLE TRANSMISSION.

NOTES

1 PILOT AND PASSENGER SEATS - LUBRICATE TRACK ROLLERS AND STOP PINS AS REQUIRED USING GENERAL PURPOSE, LOW TEMPERATURE LUBRICATING OIL, MIL-L-7870
2. WHEEL BEARINGS REQUIRE CLEANING AND REPACKING AFTER EXPOSURE TO AN ABNORMAL QUANTITY OF WATER.

CAUTIONS

1. DO NOT USE HYDRAULIC FLUID WITH A CASTOR OIL OR ESTER BASE
2. DO NOT APPLY LUBRICANT TO RUBBER PARTS

WARNING

1 JET FUELS AND LUBRICATING OILS HAVE AN INJURIOUS EFFECT ON THE SKIN. AVOID CONTACT AS MUCH AS POSSIBLE

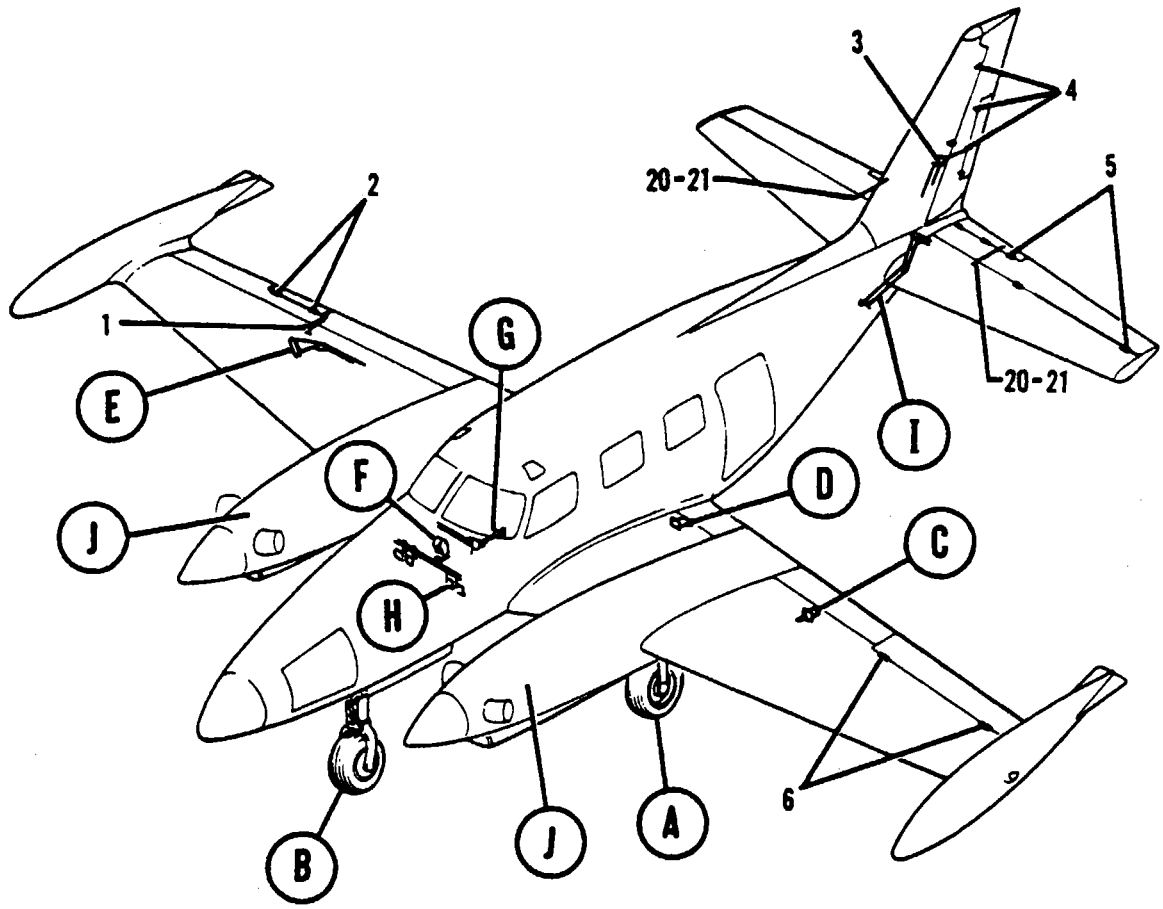

NOTE
REFER TO THE APPROPRIATE CHART FOR SKETCHES, LUBRICATIONS AND FREQUENCY

Figure 2-12b. Aircraft Lubrication Charts

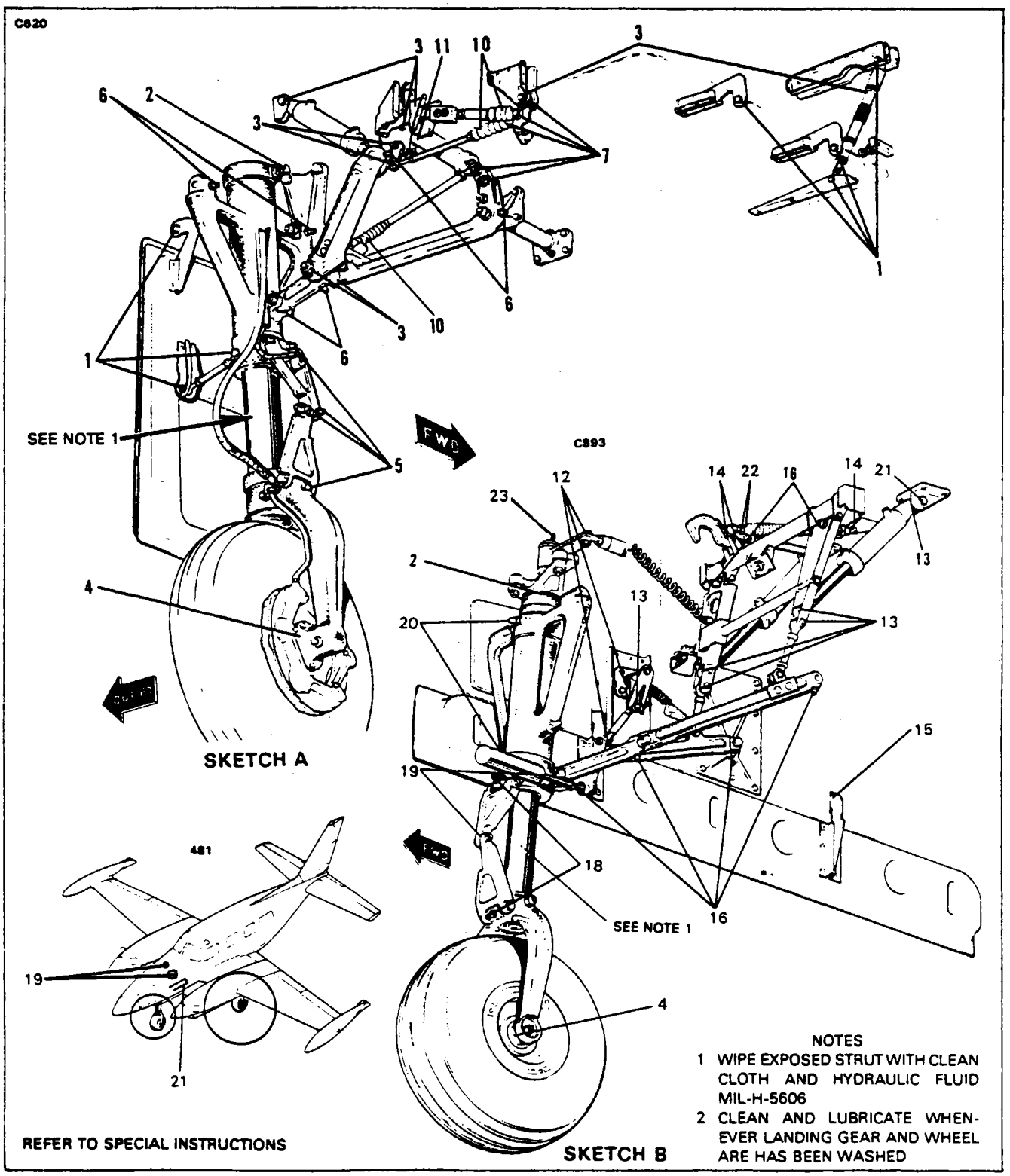

Chart 2-1. Lubrication Chart (Landing Gears)

COMPONENT	LUBRICANT	FREQUENCY
1. GEAR DOOR, OUTBOARD, HINGES AND CONTROL RODS, RIGHT AND LEFT	MIL-L-7870	100 HRS
2 GEAR OLEO STRUT FILLER, RIGHT AND LEFT, NOSE GEAR	MIL-H-5606	AS REQUIRED
3 GEAR DOWNLOCK HOOK, CONTROL ROD ENDS AND BELLCRANK, RIGHT AND LEFT (STD & EMER)	MIL-L-7870	100 HRS
4 WHEEL BEARINGS	MIL-G-81322	100 HRS
5 GEAR TORQUE LINK FITTINGS, RIGHT AND LEFT	MIL-G-23827	100 HRS
6 GEAR SIDE BRACE LINK BUSHING AND HOUSING BUSHING, RIGHT AND LEFT	MIL-G-23827	100 HRS
7 GEAR UPLOCK HOOK, CONTROL ROD ENDS, CYLINDER ENDS, RIGHT AND LEFT	MIL-L-7870	100 HRS
8 GEAR DOOR, INBOARD, HINGES AND CYLINDER ENDS, RIGHT AND LEFT	MIL-L-7870	100 HRS
9 BRAKE AND POWER PACK RESERVOIR	MIL-H-5606	AS REQUIRED
10. GEAR LOCK ROD ASSEMBLY AND DOWNLOCK HOOK ASSEMBLY (STD. & EMER) (SEE SPECIAL INSTRUCTION 7) (SEE NOTE 2)	MIL-G-3545	100 HRS
11 RETRACTION CYLINDER (STD & EMER)	MIL-H-5606	500 HRS
12 STEERING ARM ROLLERS, BELLCRANK RETRACTION ROD ENDS, AND STEERING ROD ENDS	MIL-L-7870	100 HRS
13 NOSE GEAR DOOR ACTUATOR, RETRACTION ROD END AND CYLINDER ROD END (SEE NOTE 2) (STD & EMER)	MIL-L-7870	100 HRS
14 UPLOCK HOOK AND UPLOCK ROD (STD & EMER)	MIL-L-7870	100 HRS
15 DOOR HINGES	MIL-L-7870	100 HRS
16 DRAG LINK ASSEMBLY AND IDLER LINK (STD & EMER)	MIL-G-23827	100 HRS
17 UPPER AND LOWER TORQUE LINK	MIL-G-23827	100 HRS
18 UPPER AND LOWER TORQUE LINK CONNECTING BOLT AND SHIMMY DAMPENER	MIL-G-23827	100 HRS
19 GEAR HOUSING BUSHINGS	MIL-G-23827	100 HRS
20 RETRACTION ROD ENDS	MIL-L-7870	100 HRS
21 UPLOCK ROD ASSEMBLY (STD & EMER) (SEE SPECIAL INSTRUCTION 7) (SEE NOTE 2)	MIL-G-3545	100 HRS
22 STEERING BELLCRANK	ALL PURPOSE GREASE	AS REQUIRED

PPS60071

Chart 2-1. Lubrication Chart (Landing Gears) (cont.)

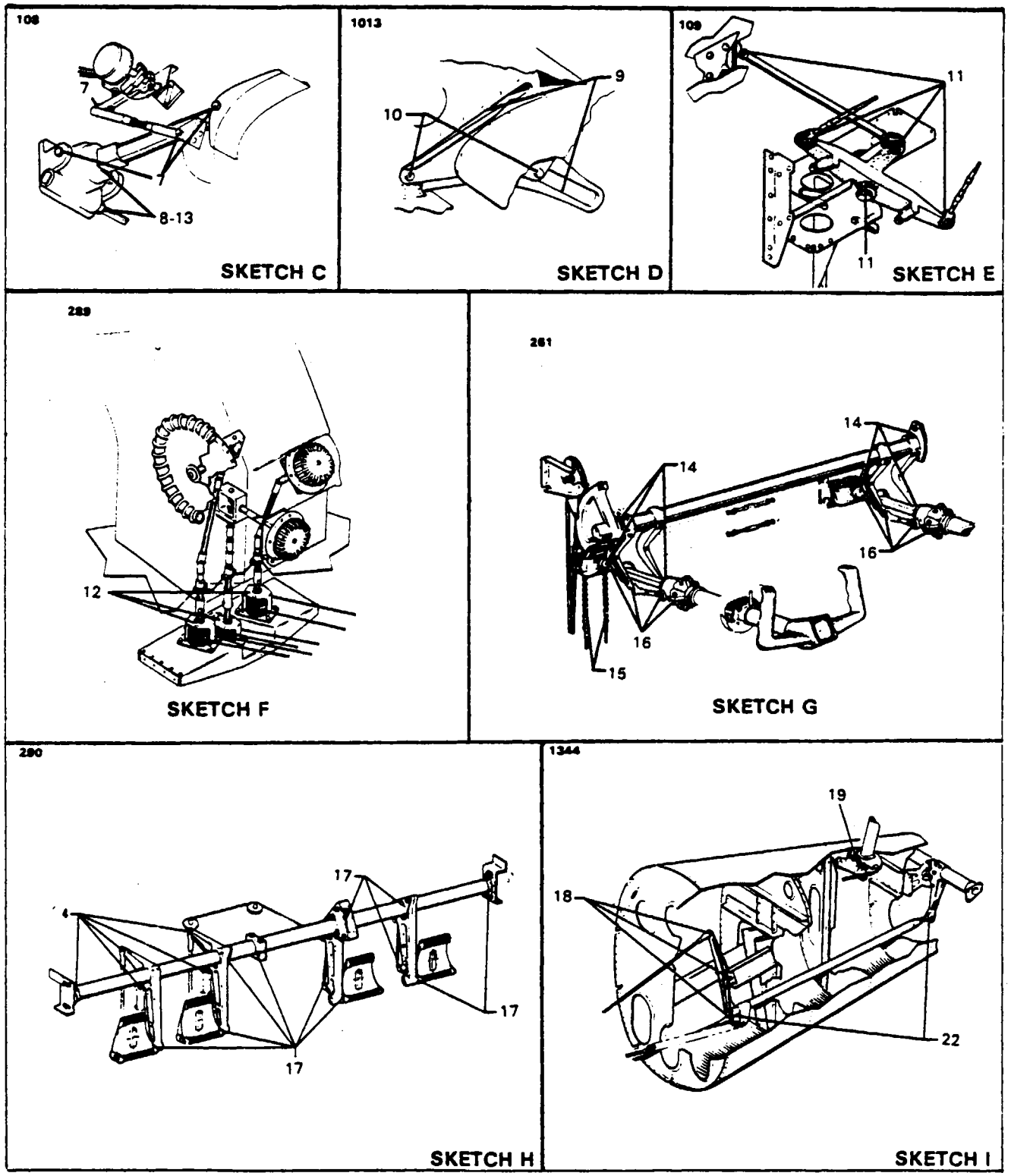

Chart 2-2. Lubrication Chart (Control System)

COMPONENT	LUBRICANT	FREQUENCY
1 AILERON TRIM SCREW (SEE FIGURE 2-12b)	MIL-G-23827	500 HRS
2 AILERON TRIM TAB HINGES AND CONTROL ROD ENDS (SEE FIGURE 2-12b)	MIL-L-7870	100 HRS
3 RUDDER TRIM SCREW (SEE FIGURE 2-12b)	MIL-G-23827	500 HRS
4 RUDDER AND RUDDER TRIM TAB HINGES AND CONTROL ROD ENDS (SEE FIGURE 2-12b)	MIL-L-7870	100 HRS
5 ELEVATOR AND ELEVATOR TRIM TAB HINGES AND CONTROL ROD ENDS (SEE FIGURE 2-12b)	MIL-L-7870	100 HRS
6 AILERON HINGES, RIGHT AND LEFT (SEE FIGURE 2-12b)	MIL-L-7870	100 HRS
7 FLAP TRANSMISSION PIVOT BOLTS AND SENDER ARM	MIL-L-7870	100 HRS
8 FLAP TRANSMISSION, RIGHT AND LEFT	REFER TO SPECIAL INSTRUCTION NO. 9	500 HRS
9 FLAP TRACK, RIGHT AND LEFT	ALL PURPOSE SLIP SPRAY (DUPONT NO 6611)	100 HRS
10. FLAP TRACK ROLLERS, RIGHT AND LEFT	MIL-L-7870	100 HRS
11 AILERON BELLCRANK CABLE ENDS, PIVOT BEARING AND CONTROL ROD ENDS, RIGHT AND LEFT	MIL-L-7870	100 HRS
12 TRIM SCREWS	MIL-G-3278 OR MIL-G-23827	500 HRS
13 TRANSMISSION SCREW, RIGHT AND LEFT	MIL-G-23827	500 HRS
14 CONTROL WHEEL, TORQUE TUBE BEARINGS, SPROCKET BUSHINGS, AND ROLLER BEARINGS	MIL-L-7870	500 HRS
15 CONTROL WHEEL CHAIN, VERTICAL AND HORIZONTAL	MIL-L-7870	500 HRS
16 CONTROL WHEEL, ROLLERS, LINK AND FLEXIBLE	MIL-L-7870	100 HRS
17 RUDDER PEDALS, TORQUE TUBE BEARINGS AND BLOCK, CONTROL CABLE ENDS, BRAKE CYLINDER ENDS AND PULLEYS	MIL-L-7870	100 HRS
18 ELEVATOR BELLCRANK, PIVOT BOLTS AND CABLE ENDS	MIL-L-7870	100 HRS
19 RUDDER HORN CABLE ENDS	MIL-L-7870	100 HRS
20 ELEVATOR TRIM SCREWS (SEE FIGURE 2-12b)	MIL-G-23827	500 HRS
21 ELEVATOR TRIM TAB CONTROL ROD ENDS (SEE FIGURE 2-12b)	MIL-L-7870	100 HRS
22 ELEVATOR CONTROL ROD	MIL-L-7870	100 HRS

Chart 2-2. Lubrication Chart (Control System) (cont.)

NOTE
REFER TO THE LATEST REVISION OF HARTZELL SERVICE LETTER NO. 61

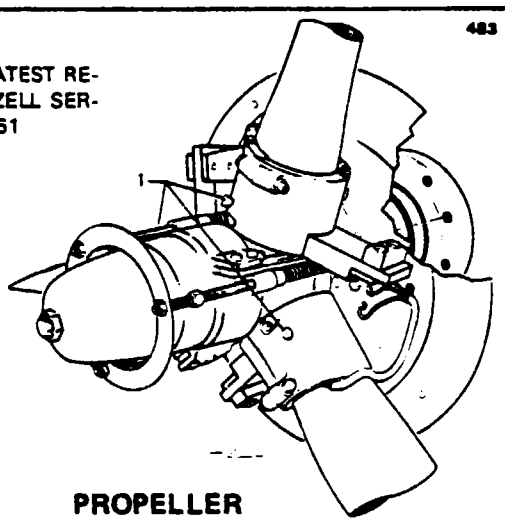

PROPELLER

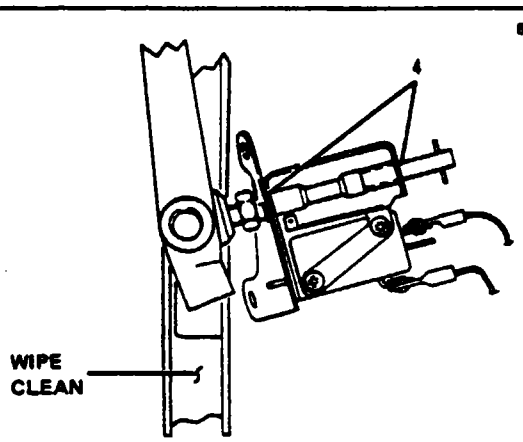

BETA SWITCH

SPECIAL INSTRUCTIONS

CLEAN OR REPLACE OIL FILTER ELEMENT AT EACH OIL DRAIN PERIOD AS DESCRIBED IN SECTION VIII. IN AIRCRAFT WITH A TYPICAL UTILIZATION OF 50 HOURS/MONTH OR LESS, CHANGE ENGINE OIL EVERY 400 HOURS OR 9 MONTHS, WHICHEVER COMES FIRST. REFER TO THE LATEST REVISION OF PRATT AND WHITNEY, SERVICE BULLETIN NO. 1001 FOR A LIST OF APPROVED OILS FOR THE PA-31T AND PA-31T2 AND REFER TO SERVICE BULLETIN NO. 12001 FOR THE PA-31T1.

NOTE
REFER TO PARAGRAPH 2-65 FOR ENGINE ACCESSORY DRIVE SHAFTS LUBRICATION.

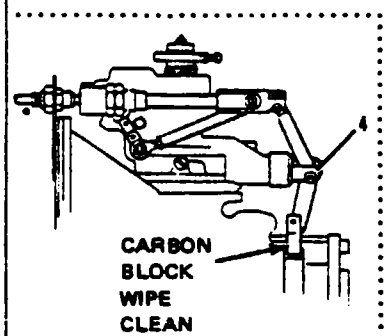

VIEW A

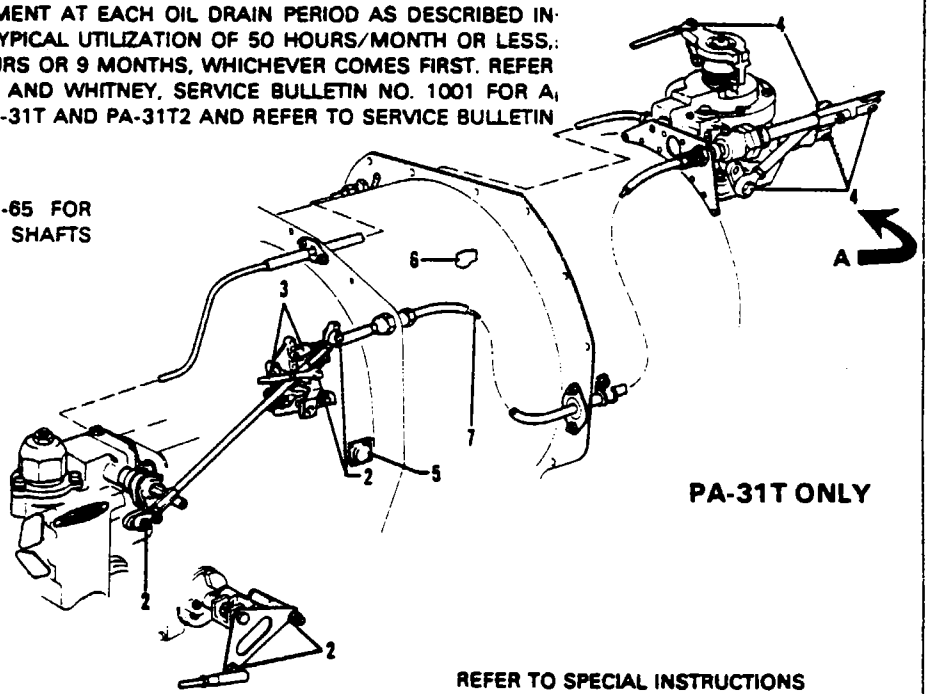

PA-31T ONLY

REFER TO SPECIAL INSTRUCTIONS

SKETCH J

Chart 2-3. Lubrication Chart (Power Plant and Accessories)

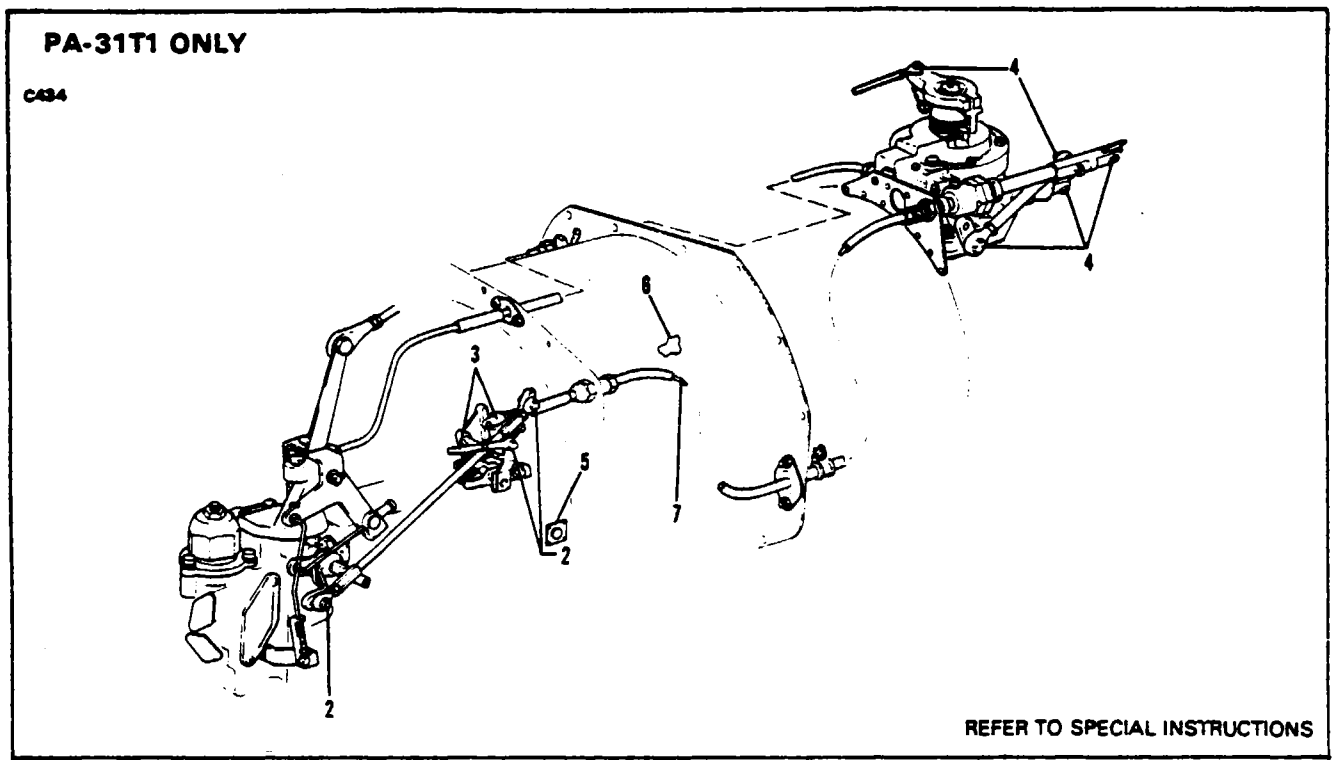

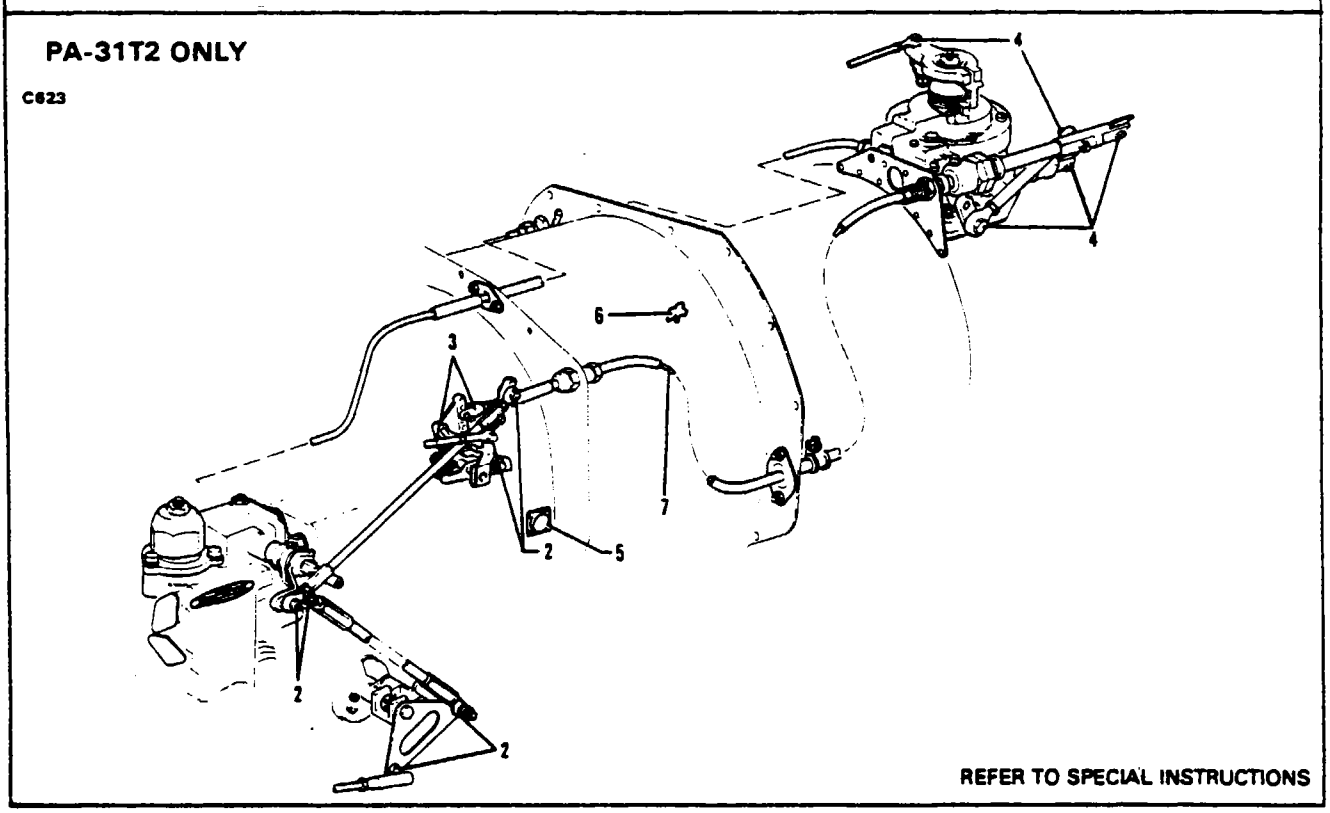

Chart 2-3. Lubrication Chart (Power Plant and Accessories) (cont.)

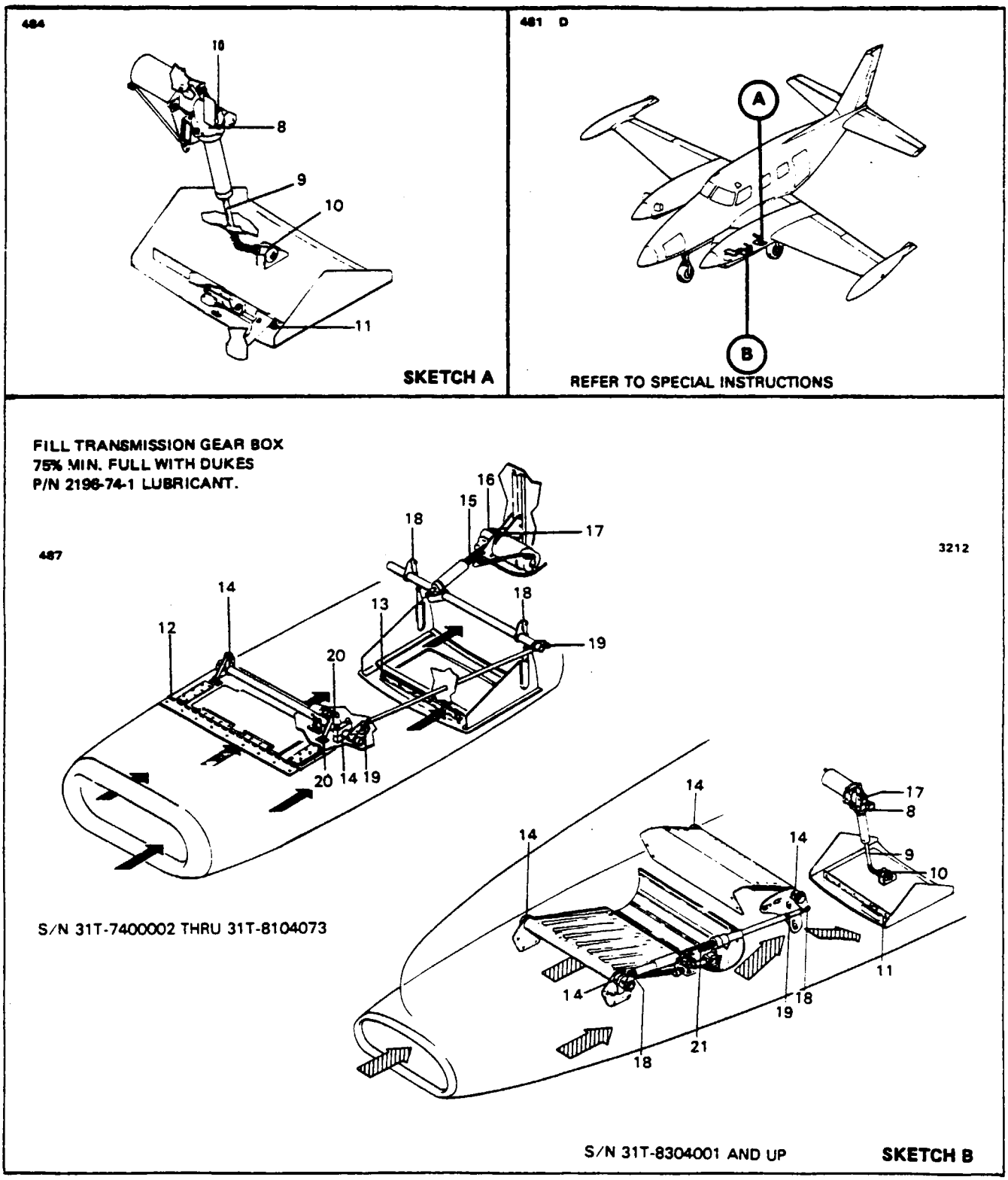

Chart 2-3. Lubrication Chart (Power Plant and Accessories) (cont.)

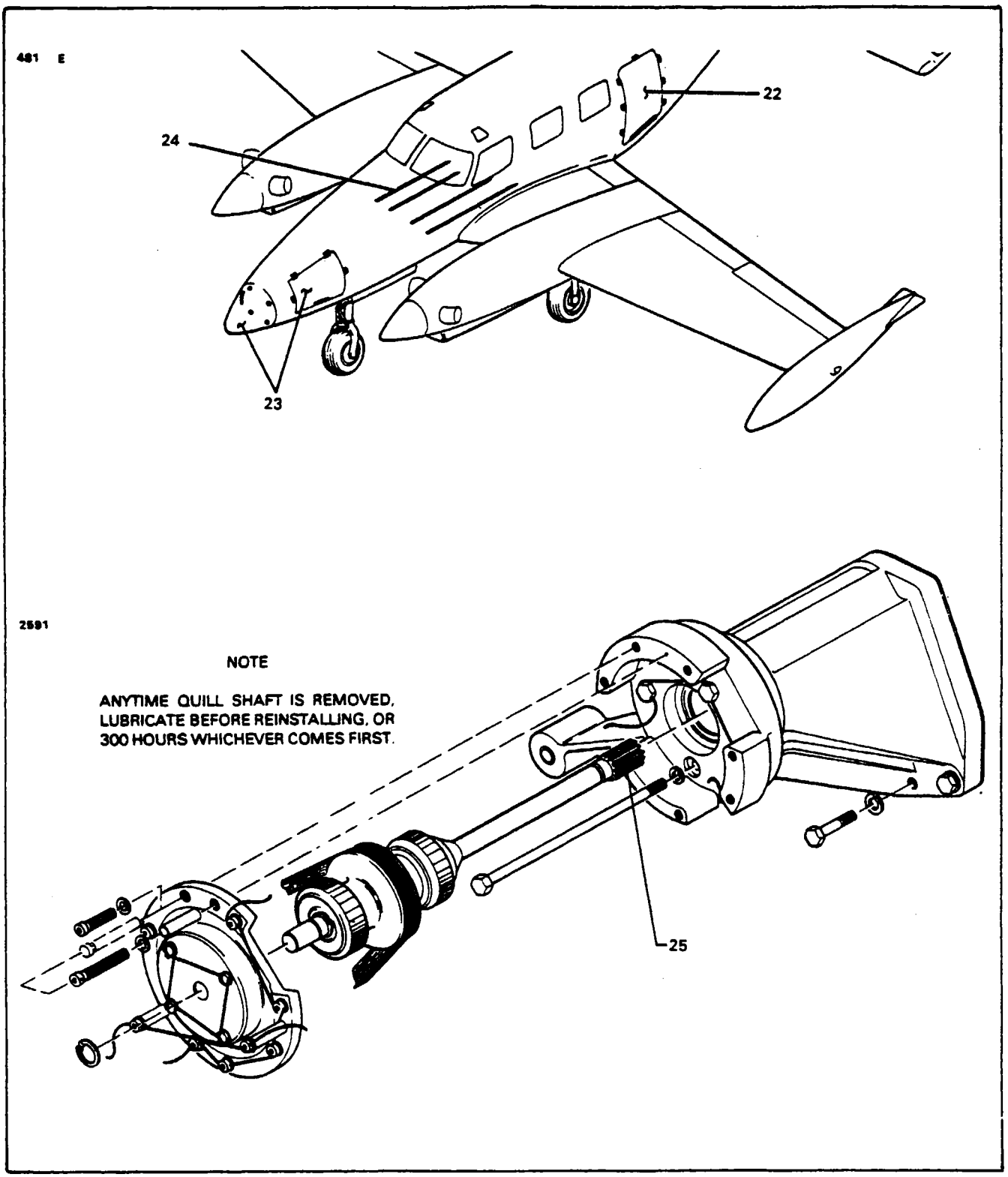

Chart 2-3. Lubrication Chart (Power Plant and Accessories) (cont.)

COMPONENT	LUBRICANT	FREQUENCY
1 ZERK FITTINGS, BLADE HUB (2 PER BLADE)	MIL-G-23827	100 HRS
2. FUEL CONTROL UNIT INTERCONNECT ROD ENDS	MIL-G-23827	100 HRS
3. CONTROL CAM AND PINS	LUBRIPLATE 130A	100 HRS
4 PROPELLER CONTROL ROD ENDS	MIL-G-23827	100 HRS
5. OIL FILTER ELEMENT		REF. TO SPECIAL INSTRUC NO. 6
6 OIL TANK		REF TO SPECIAL INSTRUC. NO 6
7 PUSH PULL CONTROL - WIRE ROPE	MIL-G-21164	100 HRS
8 TRANSMISSION ASSEMBLY (SEE NOTE 2)	DUKES 2196-74-1	500 HRS
9 TRANSMISSION SCREW	MIL-G-23827	500 HRS
10 SLEEVE AND BOLT ASSEMBLY	MIL-L-7870	100 HRS
11 OIL COOLER DOOR HINGE	MIL-L-7870	100 HRS
12 ICE DEFLECTOR DOOR HINGE	MIL-L-7870	100 HRS
13 BYPASS DOOR HINGE	MIL-L-7870	100 HRS
14 BEARING BLOCKS	MIL-G-23827	100 HRS
15 TRANSMISSION SCREW	MIL-G-23827	500 HRS
16 TRANSMISSION ASSEMBLY (SEE NOTE 2)	DUKES 2196-74-1	500 HRS
17 TRANSMISSION MOUNTING BUSHINGS (SEE NOTE 1)	MIL-G-23827	500 HRS
18 CLEVIS PIN	MIL-L-7870	100 HRS
19 ICE DEFLECTOR DOOR ROD ENDS	MIL-L-7870	100 HRS
20 CLEVIS PINS AND BOLT ASSEMBLIES	MIL-L-7870	100 HRS
21 TRANSMISSION SCREW	MIL-G-21164C	500 HRS
22 CABIN DOOR LATCH, HINGES AND STEP MECHANISM	MIL-L-7870	100 HRS
23 NOSE CONE AND FORWARD BAGGAGE DOOR HINGES AND LATCHES	MIL-L-7870	100 HRS
24 SEAT TRACKS ALL	MIL-L-7870	100 HRS
25 SPLINES OF QUILL SHAFT	MIL-G-21164, PLASTIMOLY OR PLASTILUBE #3	SEE NOTE

Chart 2-3. Lubrication Chart (Power Plant and Accessories) (cont.)

2-66. OXYGEN SYSTEM.

2-67. SERVICING OXYGEN SYSTEM. The oxygen for the breathing system is furnished from a stationary cylinder located in the nose section. Service and maintenance instructions for the oxygen system may be found in Section XIV.

2-68. OXYGEN SYSTEM SAFETY PRECAUTIONS. The utmost care must be exercised in servicing, handling and inspection of the oxygen system. Comply with the following precautions:

a. Keep the oxygen regulator, cylinder, gauge, valve, fittings, masks and all other components of the oxygen system free of oil, grease, fuel and all other readily combustible substances.

b. Do not allow foreign matter to enter the oxygen lines.

WARNING

The presence of foreign matter in the high pressure lines can cause an explosion. When coming in contact with oxygen equipment keep hands, tools and clothing clean - hospital clean.

c. Never attempt to repair or repaint oxygen equipment.

d. Keep fire and heat away from oxygen equipment. Do not smoke while working with or near oxygen equipment and take care not to generate sparks with carelessly handled tools when working on the oxygen system.

e. Never allow electrical equipment to come in contact with the oxygen cylinder.

f. Only a thread compound approved under MIL-T-5542 can be used safely on oxygen systems. Apply only to the first three threads of male fittings to prevent thread seizure.

2-69. FILLING OXYGEN CYLINDER. The filler valve for the oxygen system is accessible through a door located on the left side of the nose section.

a. To fill the oxygen cylinder, open the access door, remove the cap from the filler valve and attach the filler hose from the oxygen recharge unit to the filler valve. Ascertain that all fittings are free from oil, grease, dirt, etc.

NOTE

If the airplane's oxygen cylinder pressure is below 50 psi, the system should be purged as described in Section XIV.

TABLE II-V. OXYGEN SERVICING TABLE FOR 22 CUBIC FOOT CYLINDERS

Ambient Temperature Degrees Fahrenheit	After Cooling Pressure Static	*Filling Pressure For 1800 PSI At NTP
-20	1382.6	1498.6
-15	1405.8	1521.8
-10	1429.0	1544.9
-5	1452.2	1568.1
0	1475.4	1591.3
5	1498.6	1614.5
10	1521.8	1637.7
15	1544.9	1660.9
20	1568.1	1684.1
25	1591.3	1707.3
30	1614.5	1730.5
35	1637.7	1753.7
40	1660.9	1776.8
45	1684.1	1800.0
50	1707.3	1823.2
55	1730.5	1846.4
60	1753.7	1869.6
65	1776.8	1892.8
70	1800.0	1916.0
75	1823.2	1939.2
80	1846.4	1962.4
85	1869.6	1985.5
90	1892.8	2008.7
95	1916.0	2031.9
100	1939.2	2055.1
105	1962.4	2078.3
110	1985.5	2101.5
115	2008.7	2124.7
120	2031.9	2147.9
125	2055.1	2171.1

*This column assumes about a 25° F rise in temperature due to the heat of compression.

TABLE II-V. OXYGEN SERVICING TABLE FOR 48 CUBIC FOOT CYLINDERS (cont.)

Ambient Temperature Degrees Fahrenheit	After Cooling Pressure Static	*Filling Pressure For 1800 PSI At NTP
-20	1382.7	1498.6
-15	1405.9	1521.8
-10	1429.1	1545.0
-5	1452.3	1568.2
0	1475.5	1591.4
5	1498.6	1614.6
10	1521.8	1637.8
15	1545.0	1661.0
20	1568.2	1684.2
25	1591.4	1707.4
30	1614.6	1730.6
35	1637.8	1753.8
40	1661.0	1776.9
45	1684.2	1800.1
50	1707.4	1823.3
55	1730.6	1846.5
60	1753.8	1869.7
65	1776.9	1892.9
70	1800.1	1916.1
75	1823.3	1939.3
80	1846.5	1962.5
85	1869.7	1985.7
90	1892.9	2008.9
95	1916.1	2032.1
100	1939.3	2055.2
105	1962.5	2078.4
110	1985.7	2101.6
115	2008.9	2124.8
120	2032.1	2148.0
125	2055.2	2171.2

*This column assumes about a 25° F rise in temperature due to the heat of compression.

TABLE II-V. OXYGEN SERVICING TABLE FOR 22 AND 50 CUBIC FOOT CYLINDERS (cont.)

Ambient Temperature Degrees Fahrenheit	After Cooling Pressure Static	*Filling Pressure For 1850 PSI At NTP
-20	1417.7	1537.8
-15	1441.8	1561.9
-10	1465.8	1585.9
-5	1489.8	1609.9
0	1513.8	1633.9
5	1537.8	1658.0
10	1561.9	1682.0
15	1585.9	1706.0
20	1609.9	1730.0
25	1633.9	1754.1
30	1658.0	1778.1
35	1682.0	1802.1
40	1706.0	1826.1
45	1730.0	1850.1
50	1754.1	1874.2
55	1778.1	1898.2
60	1802.1	1922.2
65	1826.1	1946.2
70	1850.1	1970.3
75	1874.2	1994.3
80	1898.2	2018.3
85	1922.2	2042.3
90	1946.2	2066.4
95	1970.3	2090.4
100	1994.3	2114.4
105	2018.3	2138.4
110	2042.3	2162.4
115	2066.4	2186.5
120	2090.4	2210.5
125	2114.4	2234.5

*This column assumes about a 25° F rise in temperature due to the heat of compression.

b. When using a recharge unit consisting of one supply cylinder, slowly open the valve of the supply unit and allow the oxygen to transfer until the service pressure for the cylinder is reached. Ambient temperature must be considered when filling oxygen cylinders. Refer to Table II-V. Indicated Oxygen Cylinder Pressure vs. Ambient Temperature.

c. When using a recharge unit consisting of two or more supply cylinders (cascade storage system), it is recommended that the following procedure be used:

1. Before opening any valves, check the pressure remaining in the airplane's oxygen cylinder. If it is still partly charged, note the pressure indicated on the cylinder gauge. Then open and close each valve on the cascade storage system and determine which cylinder has the lowest pressure. When found, if this cylinder has a pressure lower than the oxygen cylinder in the airplane, do not attempt using it for filling. Use the storage cylinder that has a pressure higher than the airplane's cylinder but lower than the others.

2. Open the valve on only the one storage cylinder with the lowest pressure. When the pressure indicated on the airplane's oxygen gauge and charging gauge has become equal, close the valve of the storage cylinder, then go to the storage cylinder with the next higher pressure and repeat the procedure.

3. If, after using the last storage cylinder, the airplane's oxygen system is still not fully charged, a full storage cylinder should be put in place of a cylinder with the lowest pressure and used in the same manner.

4. A good deal of oxygen will remain in the large cylinders used in the cascade system after filling only one of the cylinders, but each remaining oxygen will be at a pressure something less than the 1800 pounds, which is not sufficient pressure to completely refill another aircraft cylinder, although it will refill several smaller cylinders.

5. It is not economical, even on a three or four-cylinder cascade system to begin recharging with oxygen at less than 300 psi pressure in the 300 cubic foot bank of cylinders. So, use 300 cubic foot cylinders down to approximately 300 psi, then return for refilling. In two-cylinder systems, use to approximately 600 psi, then return for filling.

d. When the pressure gauge on the recharge unit or in the airplane reaches the appropriate service pressure (refer to Table II-V), close the pressure valve on the recharge unit. Disconnect the filler hose from the filler valve, replace the protective cap on the filler valve and close the access door.

2-70. PRESSURIZATION SYSTEM. This system requires very little maintenance other than periodic cleaning, checks for leakage around the cabin area, and the operation of the controls necessary to maintain proper cabin pressurization. A cabin pressurization check should be performed in accordance with Section XIII or Section XIIIA.

2-71. AIR CONDITIONING SYSTEM. Servicing this system consists of periodically checking the freon refrigerant level by operating the system and observing the sight gauge window in the upper end of the receiver-dryer. This is done through the nose baggage compartment rear access panel. Check for signs of foam or bubbles in the sight gauge. If these conditions are observed, refer to Section XIII or Section XIIIA for further instructions on the air conditioner. If the system must be recharged, it is advisable to check the oil in the compressor at this time before recharging the system, and replace the receiver-dryer and O-rings in connections which were opened.

2-72. CLEANING.

2-73. FIELD CLEANING ENGINE. Field Cleaning consists of internal washing of the compressor and external washing of the engine. Refer to Table II-VIII for appropriate Pratt and Whitney Maintenance Manual.

2-74. ENGINE COMPRESSOR WASHING. The Pratt and Whitney service manuals for the PT6A engine gives full, detailed instructions for the washing of the engine and compressor. For specific instructions peculiar to the Piper installation, the following additional instructions should also be used. (Refer to Table II-VIII.)

CAUTION

Before any type of cleaning make sure the cables are properly sealed to prevent water from entering the cable housing. Try not to direct any water pressure at these seals. Water could freeze and bind cables under certain conditions.

a. Allow the engine to cool for at least 30 minutes before performing a compressor wash.
b. With the top cowling removed, disconnect the bleed air line at the union, just below the "T" connection, and securely cap the lines.
c. Have the bleed air shut-off valve closed, and the ground run cowl installed.
d. On the affected engine, open the access door on the side of the bottom cowl and with the cleaning mechanism attached to the wash ring fitting, perform the cleaning as directed in the P & W service manual.
e. A soaking period of about 15 minutes should be observed after wash.

NOTE

Motor engine with starter only. Make sure ignition is off and appropriate fuel "firewall shut-off valve" is closed.

Due to chemicals in tap water which may cause deposits on compressor blades, tap water should not be used.

CAUTION

Observe starter operating limits of 30 seconds on 60 seconds off, 30 seconds on 60 seconds off, 30 seconds on and then 30 minutes off.

2-75. CLEANING LANDING GEAR. Before cleaning the landing gear, place a plastic cover or similar material over the wheel and brake assembly.
a. Place a pan under the gear to catch waste.
b. Spray or brush the gear area with solvent or a mixture of solvent and degreaser, as desired. It may be necessary to brush areas that were sprayed where heavy grease and dirt deposits have collected in order to clean them.

NOTE

If desired, the inboard gear doors may be lowered by actuating the emergency hand pump handle, with the master switch off.

c. Allow the solvent to remain on the gear from 5 to 10 minutes, then rinse the gear with additional solvent and allow to dry.
d. Remove the cover from the wheel and remove the catch pan.
e. Lubricate the gear per Lubrication Chart.

2-76. CLEANING EXTERIOR SURFACES. The airplane should be washed with a mild soap and water. Harsh abrasive or alkaline soaps or detergents used on painted or plastic surfaces could make scratches or cause corrosion of metal surfaces. Cover areas where cleaning solution could cause damage. To wash the airplane, the following procedure may be used:

a. Flush away loose dirt with water.

b. Apply cleaning solution with a rag, sponge or soft bristle brush.

c. To remove stubborn oil and grease, use a cloth dampened with naphtha.

d. Any good automotive wax may be used to preserve the painted surfaces. Soft cleaning cloths or a chamois should be used to prevent scratches when cleaning or polishing. A heavier coating of wax on the leading surfaces will reduce the abrasion problems in these areas.

2-77. CLEANING WINDSHIELD AND WINDOWS.

a. Remove dirt, mud, etc., from exterior surface with clean water.

b. Wash with mild soap and water or a 50/50 solution of isopropanol and water. (Do not use plastic cleaners on glass windshields.) Use a soft cloth or sponge using a straight rubbing motion. Do not rub harshly on any surfaces.

NOTE

Do not use any abrasive materials, strong acids or bases, gasoline, alcohol, benzene, carbon tetrachloride, thinner, acetone, or window cleaning sprays.

c. Rinse thoroughly and dry.

NOTE

Do not apply wax to windshields.

d. After cleaning plastic surfaces, apply a thin coat of hard polishing wax. Rub lightly with a soft cloth. Do not use a circular motion.

e. A severe scratch or mar in plastic can be removed by using jeweler's rouge to rub out the scratch. Smooth both sides and apply wax.

f. To improve visibility through windshield and windows during flight through rain, a rain repellent such as REPCON should be applied to the windshield and windows. The surfaces of the windshield and windows treated becomes so smooth that water beads up and readily flows off the surface. Apply this product in accordance with the manufacturer's instructions. (Refer to Table II-VII. Consumable Materials, for Specifications and Manufacturer's address.)

2-78. CLEANING HEADLINER, SIDE PANELS AND SEATS.

a. Clean headliner with a good quality rug and upholstery shampoo, such as the type manufactured by Bond Sanitary Products of York, Penna. Follow the manufacturer's instructions carefully. Avoid soaking or harsh rubbing.

CAUTION

Solvent cleaners require adequate ventilation.

b. Clean side panels and seats with a stiff bristle brush and vacuum where necessary.

c. Leather material should be cleaned with saddle soap or a mild soap and water.

2-79. CLEANING WOOD SURFACES. Wood surfaces may be cleaned with any household liquid or spray cleaner and polish manufactured for this purpose.

2-80. CLEANING CARPETS. Use a small whisk broom or vacuum to remove dirt. For soiled spots, use a non-inflammable dry-cleaning fluid.

2-81. CLEANING TOILET.

a. To dispose of the sanitary bag, pull the top of the bag from the pail and close with a wire tie. Remove it from the airplane in the covered pail and dispose of according to field facilities. Do not attempt to flush the bag in a toilet.

b. To clean and deodorize the airplane's toilet, mix a solution of disinfectant type cleaner. Using a soft bristle brush, rag and solution, wash the toilet pail and seat. The toilet may be removed for cleaning by disconnecting the two fasteners at the inside forward end of the unit. Slide it back and lift from the floor.

c. When offensive odor remains, use a stronger solution and reclean.

d. Rinse with fresh water and dry.

e. To install a new sanitary bag, place it over the top edge of the pail and push it into the bottom of the pail.

2-82. AIRPLANE FINISH CARE. The complete airplane is carefully finished inside and outside to assure maximum service life. Both sides of all parts are alodine treated and sprayed with zinc chromate primer. The external surfaces are coated with durable Polyurethane enamel.

When washing the airplane it is advisable to use a mild soap and water solution. Loose dirt should be flushed away with clean water. Harsh abrasive or alkaline soaps or detergents could cause corrosion or make scratches in the finish.

Use naphtha and a soft cloth to remove stubborn oil and grease. Any good automotive wax can be used to preserve the painted surfaces. Soft cleaning cloth or chamois should be used to prevent scratches when cleaning or polishing. Apply a heavier coating of wax on the leading edges of the wings and tail surfaces and on the nose cone section and propeller spinners to reduce the abrasion problems in these areas.

When repainting the airplane, never use aluminum foil as a paint spray mask on Aircon Nesa coated windshields. Nesa film is used on the exterior for static electricity protection and is basically tin oxide. Most metal brighteners, whether alkaline or acidic, can react with the aluminum foil and release hydrogen, which may come in contact with the tin oxide. When the hydrogen and the tin oxide combine, the tin oxide film is reduced to pure tin and when wiped away will leave a permanent dark stain. If metal brighteners are to be used, insure adequate protection for the windshield by using paper and pasteboard prior to painting.

2-83. ELECTRIC WINDSHIELD WIPERS. Windshield wipers are standard equipment on the left and optional on the right windshield. To operate the windshield wipers, turn the switch located on the lower right side of the instrument panel to either the HIGH or LOW position. When turning OFF the wipers, turn the switch to either the OFF or PARK position. The OFF position stops the blades in place while the PARK position returns the blades to the centerpost position.

WARNING

Never operate the windshield wiper on a dry windshield. This could scratch the glass and shorten the life of the wiper blades.

The windshield wiper motor is located forward of the bulkhead at Station 81.00 at the upper left portion of the fuselage skin. If the right side windshield wipers are installed, a flexible shaft is run from the electric motor and transmission to a converter on the right side of the same bulkhead, and the wiper runs off this converter. Refer to Section IV for adjustment of wiper blade and arm.

TABLE II-VI. DECIMAL CONVERSION CHART

4ths	8ths	16ths	32ds	64ths	TO 3 PLACES	TO 2 PLACES	M.M. EQUIV.
				1/64	.016	.02	.397
			1/32		.031	.03	.794
				3/64	.047	.05	1.191
		1/16			.062	.06	1.587
				5/64	.078	.08	1.984
			3/32		.094	.09	2.381
				7/64	.109	.11	2.778
	1/8				.125	.12	3.175
				9/64	.141	.14	3.572
			5/32		.156	.16	3.969
				11/64	.172	.17	4.366
		3/16			.188	.19	4.762
				13/64	.203	.20	5.159
			7/32		.219	.22	5.556
				15/64	.234	.23	5.593
1/4					.250	.25	6.350
				17/64	.266	.27	6.747
			9/32		.281	.28	7.144
				19/64	.297	.30	7.540
		5/16			.312	.31	7.937
				21/64	.328	.33	8.334
			11/32		.344	.34	8.731
				23/64	.359	.36	9.128
	3/8				.375	.38	9.525
				25/64	.391	.39	9.922
			13/32		.406	.41	10.319
				27/64	.422	.42	10.716
		7/16			.438	.44	11.112
				29/64	.453	.45	11.509
			15/32		.469	.47	11.906
				31/64	.484	.48	12.303
					.500	.50	12.700

4ths	8ths	16ths	32ds	64ths	TO 3 PLACES	TO 2 PLACES	M.M EQUIV.
				33/64	.516	.52	13.097
			17/32		.531	.53	13.494
				35/64	.547	.55	13.891
		9/16			.562	.56	14.288
				37/64	.578	.58	14.684
			19/32		.594	.59	15.081
				39/64	.609	.61	15.478
	5/8				.625	.62	15.875
				41/64	.641	.64	16.272
			21/32		.656	.66	16.669
				43/64	.672	.67	17.065
		11/16			.688	.69	17.462
				45/64	.703	.70	17.859
			23/32		.719	.72	18.256
				47/64	.734	.73	18.653
3/4					.750	.75	19.050
				49/64	.766	.77	19.447
			25/32		.781	.78	19.844
				51/64	.797	.80	20.241
		13/16			.812	.81	20.637
				53/64	.828	.83	21.034
			27/32		.844	.84	21.431
				55/64	.859	.86	21.828
	7/8				.875	.88	22.225
				57/64	.891	.89	22.622
			29/32		.906	.91	23.019
				59/64	.922	.92	23.416
		15/16			.938	.94	23.812
				61/64	.953	.95	24.209
			31/32		.969	.97	24.606
				63/64	.984	.98	25.003
					1.000	1.00	25.400

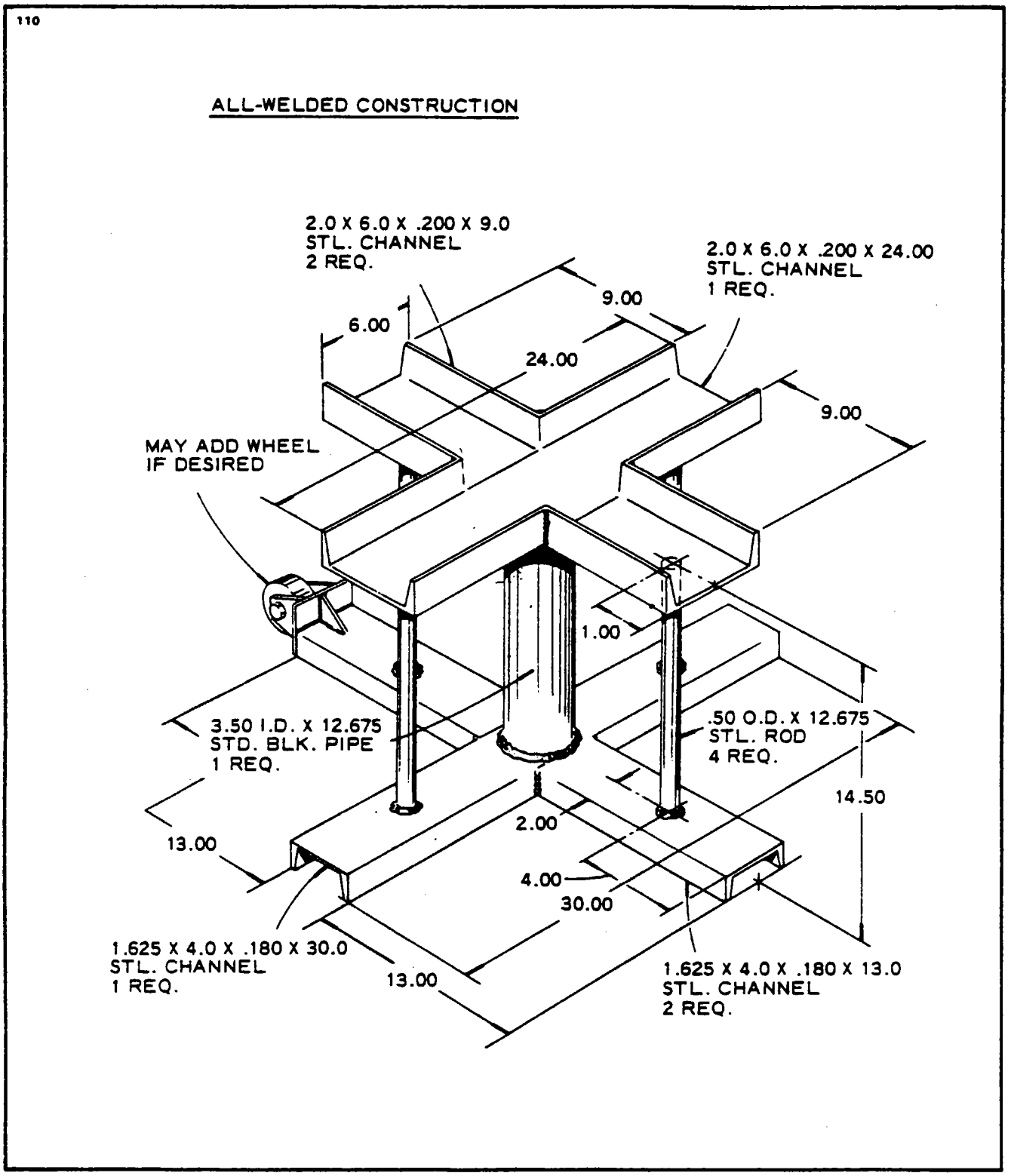

Figure 2-13. Fabricated Jack Stand for Piper Jack, Part No. 18338-0

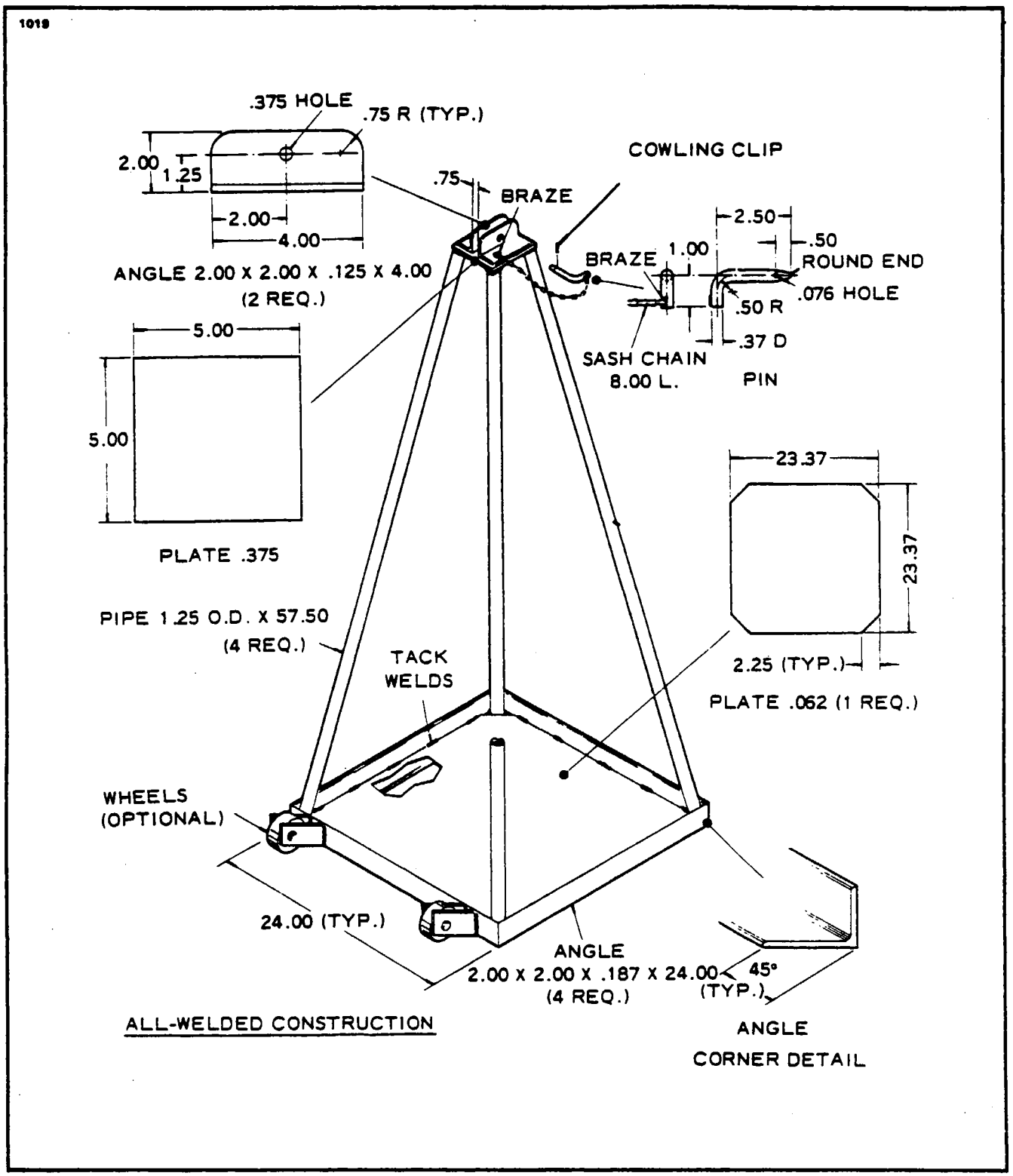

Figure 2-14. Fabricated Tail Stand

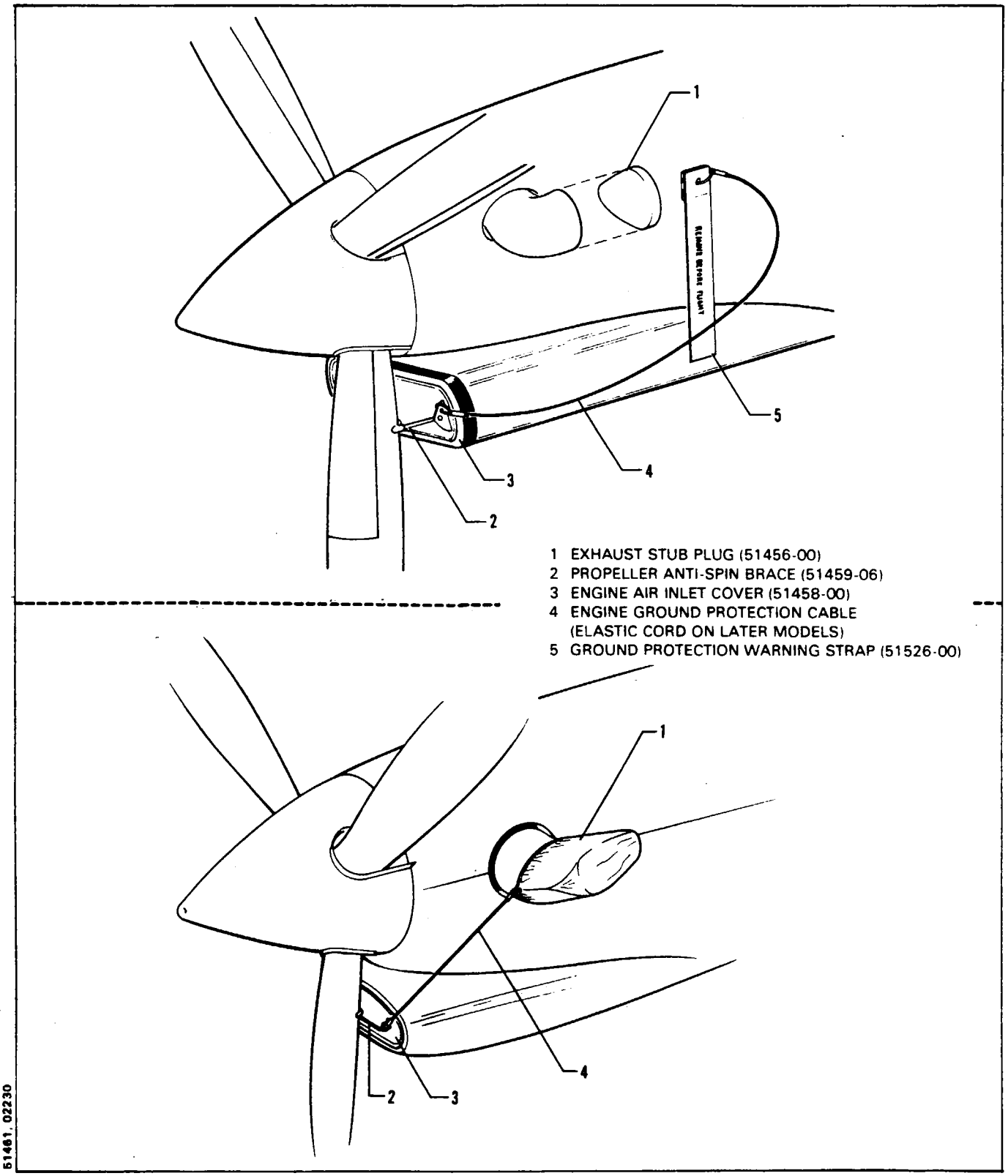

Figure 2-15. Protective Closures Installation

TABLE II-VII. CONSUMABLE MATERIALS

Material	Specification or Brand Name	Manufacturer
Anti-Seize Compound, Graphite Petrolatum	MIL-T-5544	Armite Product, Armite Laboratories 1845-49 Randolph Street, Los Angeles, California 90001 Anti-Seize Compound I, Esso Standard Oil Company, New York, New York
Anti-Seize Compound, White Lead Base	TT-A-580	Armite Product, Armite Laboratories 1845-49 Randolph Street, Los Angeles, California 90001
Adhesive	EC 801 EC 807 EC 1357	Minnesota Mining and Mfg. Adhesive Coatings and Sealers Div. 3M Center St. Paul, Minn. 55144
Trichlorethylene	Perm-A-Clor (MIL-T-7003)	Dextrex Chemical Industries Inc. P.O. Box 501 Detroit, Michigan 48232
	Turco 4217	Turco Products Inc. 24600 South Main Street, P.O. Box 6200 Carson, California 90749
Methylethylketone	TT-M-261	
Anti-galling	Ease-Off 990 (MIL-A-907)	Taxacone Company 1811 West Commerce Dallas, Texas 75208
Extreme Pressure	Lubriplate 130A (MIL-M-7866)	Fiske Bros. Refining Company 129 Lockwood Street Newark, New Jersey 07105
Molybdenum Disulfide	Molykote, Type G (Paste) Molykote, Type Z (Powder) (MIL-M-7866)	Dow Corning Corporation Alpha Molykote Plant 64 Harvard Avenue Stamford, Conn. 06902
"HI-TEMP" Anti-Seize Thread Compound	FEL-PRO C5-A	Fel-Pro Incorporated 7450 N. McCormick Blvd., P.O. Box 1103 Skokie, Illinois 60076

TABLE II-VII. CONSUMABLE MATERIALS (cont.)

Material	Specification or Brand Name	Manufacturer
Loctite, Grade AA	MIL-S-32473	Loctite Corporation 777 N. Mountain Road Newington, Conn. 06111
Loctite, Grades H and HV	MIL-S-22473	Loctite Corporation 777 N. Mountain Road Newington, Conn. 06111
Gasket Cement		Permatex No. 2, Permatex Co., Inc. Kansas City, Kansas
Grease, Aircraft Actuator	2196-74-1	Dukes Astronautics Company 7866 Deering Avenue Canoga Park, California 91304
Grease, Aircraft and Instruments, Low and High Temperature	MIL-G-23827	Supermil Grease No. A72832, American Oil Company, 165 N. Canal Chicago, Illinois 60606 Royco 27A, Royal Lubricants Co., River Road, E. Hanover, New Jersey 07934 Shell 6249 Grease, Shell Oil Co. 1 Shell Plaza Houston, Texas 77002 RR-28, Socony Mobil Oil Co., Inc. Washington 5, D.C. Castrolease A1, Castrol Oils Inc. Newark, New Jersey
Grease, High Temperature	MIL-L-3545 Superseded By MIL-G-81322	Mobile Grease 28, Mobil Oil Corp. 150 E. 42nd St. New York, N.Y. 10017
Oil, Air Conditioner	Frigidaire #525	
	Suniso #5	Virginia Chemical and Smelting Co. 3340 W. Norfolk Rd. Portsmouth, VA 23703
	Texaco Capella "E"	Texaco Inc. 2000 West Chester Ave. White Plains, N.Y. 10650

TABLE II-VII. CONSUMABLE MATERIALS (cont.)

Material	Specification or Brand Name	Manufacturer
Lubricating Grease, Gasoline and Oil Resistant	MIL-G-6032	L-237 Lehigh Chemicals, Nuddex Division Tenneco Chemicals Inc. Chestertown, Maryland 21620 Rockwell 950, Rockwell Manufacturing Co. 4207 First Ave., Brooklyn, New York 11232 Royce 32, Royal Engineering Co. Whippany, New Jersey
Hydraulic Fluid	MIL-H-5606	3126 Hydraulic Oil, Humble Refining Co. 8231 Stedman, Houston, Texas 77001 XSL 7828, Shell Oil Company 1 Shell Plaza, Houston, Texas 77002 PED 3337, Standard Oil of California 225 Bush Street San Francisco, California 94104
Lubricating Oil General Purpose, Low Temperature	MIL-L-7870	Caltex Low Temp Oil, Caltex Oil Products Co., New York, New York Sinclair Aircraft Orbitlube, Sinclair Refining Co., 600 Fifth Avenue New York, New York 1692 Low Temp Oil, Texaco Inc. 2000 WestChester Ave. White Plains, New York 10650
Silicone Rubber	RTV 103	General Electric, Silicone Products Dept. Waterford, New York 12188
Thread Compound, Anti-Seize and Sealing	MIL-T-5542	
Thread Sealant, High Pressure Oxygen System	MIL-T-27730	
Cleaning Solvent	P.D.-680 Stoddard Solvent	
Rain Repellent	REPCON FSCM 50159	UNELKO Corporation 727 E. 110th Street Chicago, Illinois 60628
Lubricating Grease	MIL-G-4343	Dow Corning Corporation P.O. Box 592 Midland, MI 48640

TABLE II-VII. CONSUMABLE MATERIALS (cont.)

Material	Specification or Brand Name	Manufacturer
Toluol	TT-T-548	
Engine Oil	CPW 202, PWA 521 Refer to the latest revision of Pratt and Whitney Engine Service Bulletin No. 1001 for PA-31T, PA-31T2 and for PA-31T1 Service Bulletin No. 12001.	
Engine Fuel	PWA 522, CPW 46 NOTE Aviation Gasoline MIL-G-5572 may be used for a maximum of 150 hours between overhaul.	
Sealer	Sentry Seal	Organic Products Co. 1963 E. Irving Blvd. Irving, Texas 75060

NOTE

Manufacturers listed are not specifically recommended by Piper Aircraft Corporation. Any product conforming to specification may be used.

NOTE

Tools with Part Numbers given are available through the Piper Service Department. Specifications for fabricated tools may be found by referring to the appropriate illustration Figure number in the Service Manual.

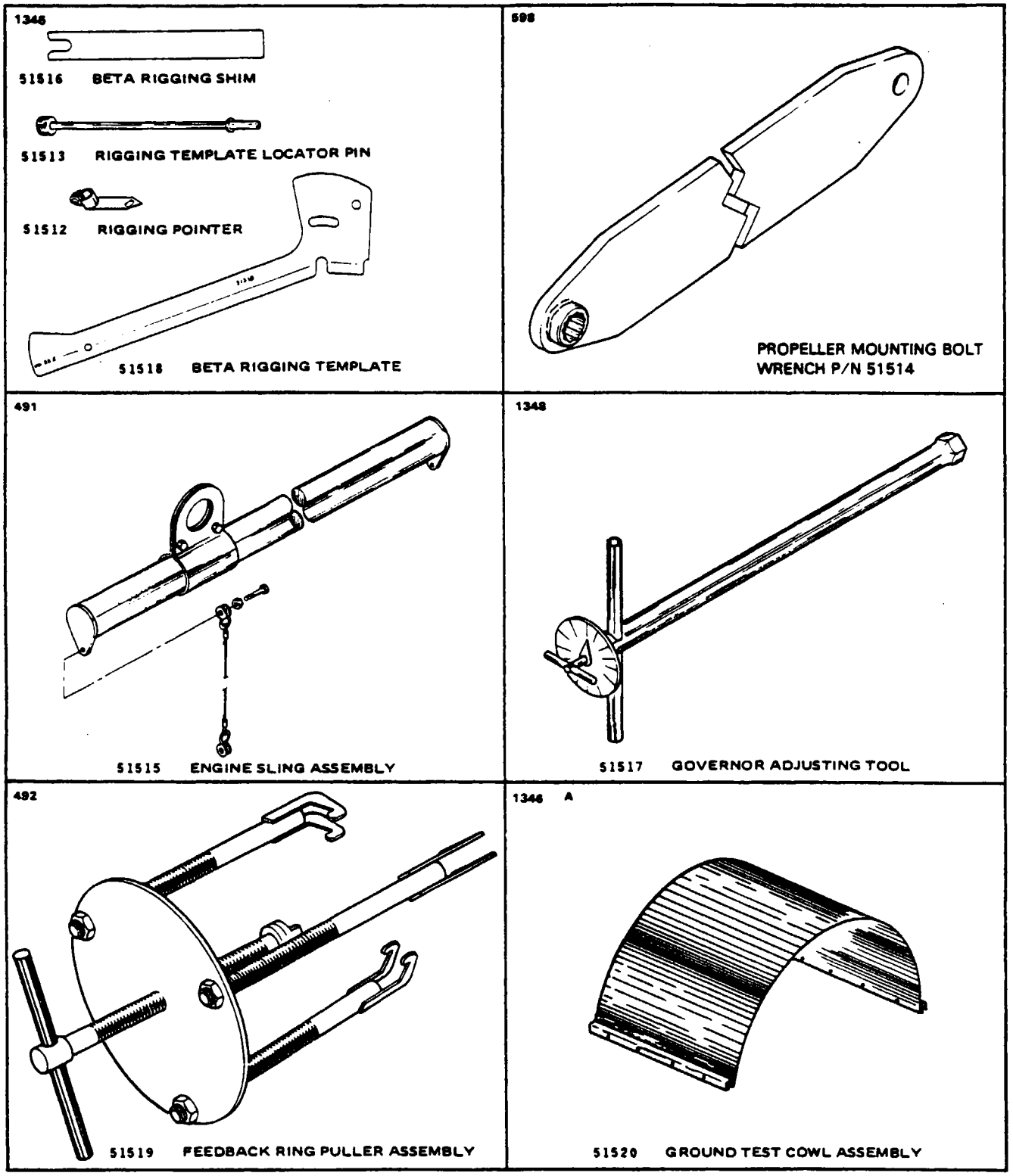

Figure 2-16. Special Tools

489

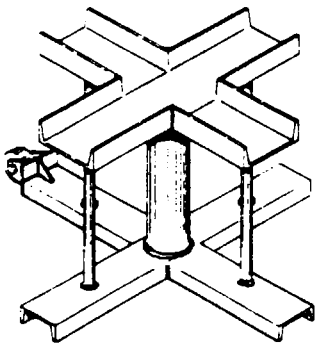

FABRICATED JACK STAND FOR PIPER JACK P/N 18338-0 (Refer to Figure 2-13)

489 A

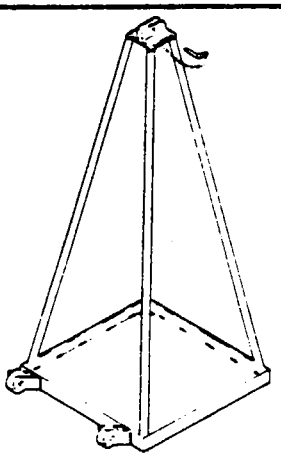

FABRICATED TAIL STAND (Refer to Figure 2-14)

1346 B

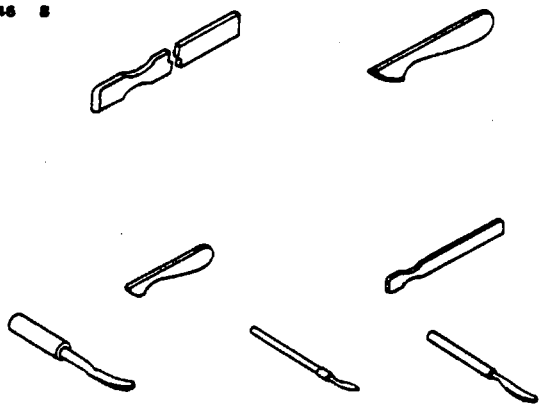

FABRICATED SEALANT TOOLS (Refer to Figure 4-28)

1348 A

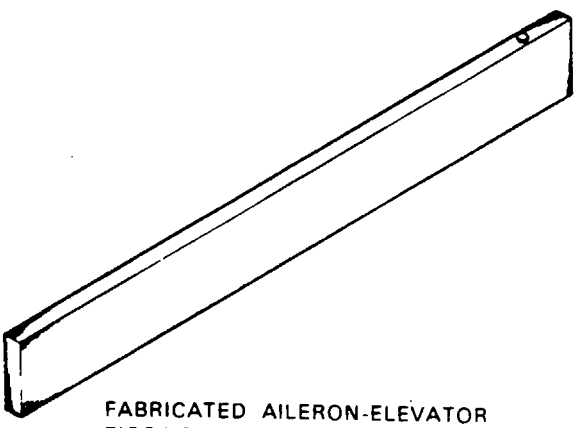

FABRICATED AILERON-ELEVATOR RIGGING TOOL (Refer to Figure 5-27)

1346 C

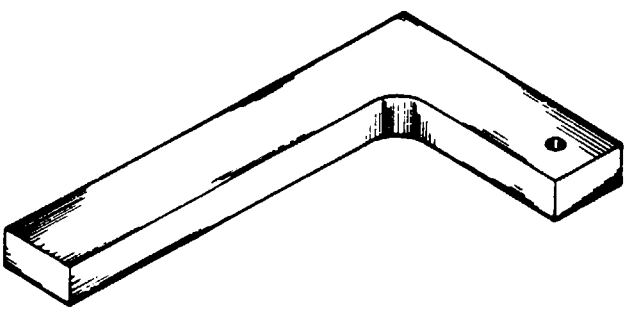

FABRICATED BELLCRANK RIGGING TOOL (Refer to Figure 5-28)

1348 B

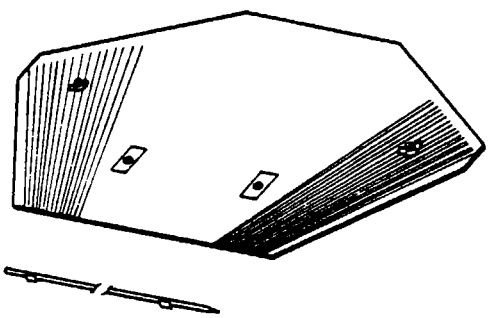

FABRICATED RUDDER RIGGING TOOL (Refer to Figure 5-29)

Figure 2-16. Special Tools (cont.)

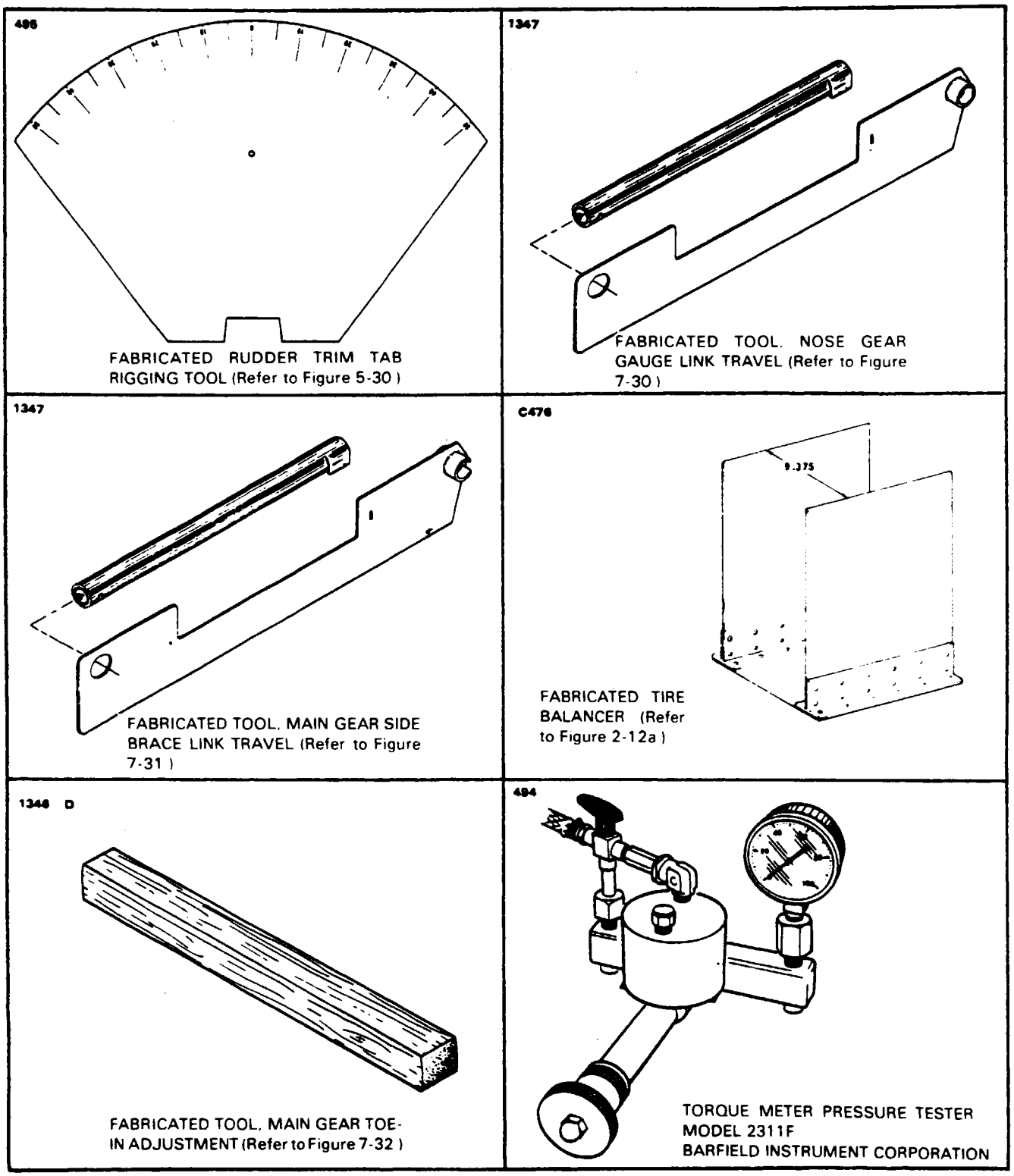

Figure 2-16. Special Tools (cont.)

496

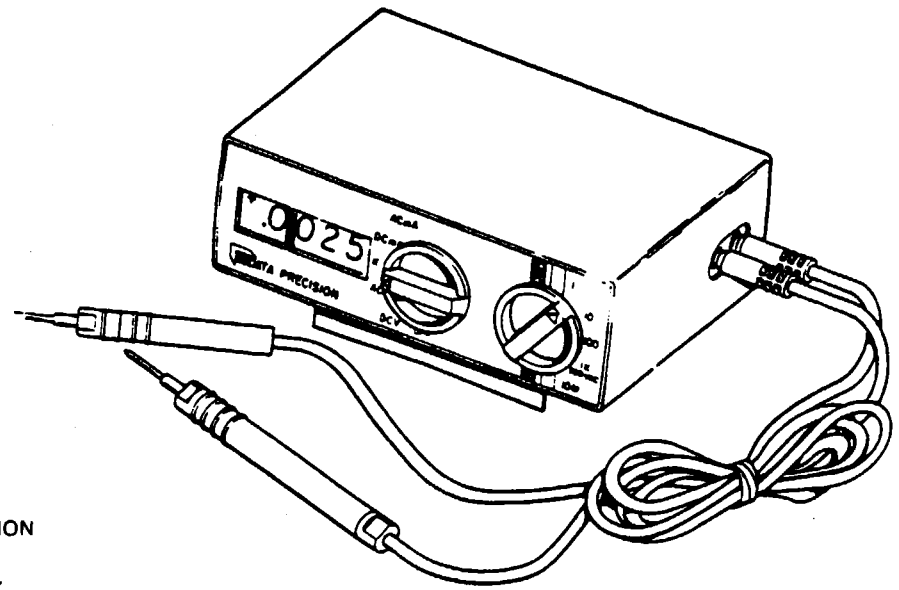

DIGITAL MULTI-METER
MANUFACTURER - DATA PRECISION

DATA PRECISION CORP
ELEC AVE DANVERS IND PARK
DANVERS, MA 01923
(617) 246-1600

493

BARFIELD INSTRUMENT CORPORATION
MODEL 2312G

TURBINE TEMPERATURE
INDICATING TEST SET

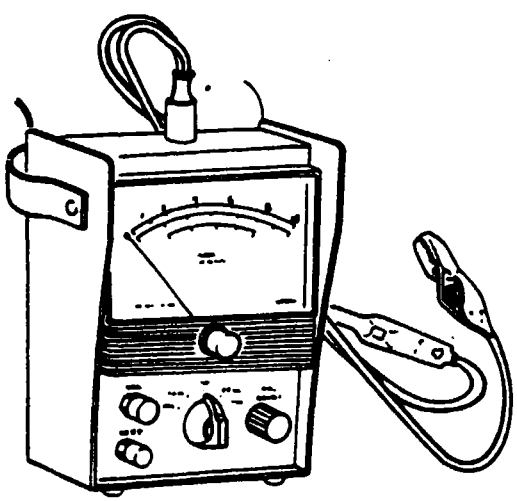

447

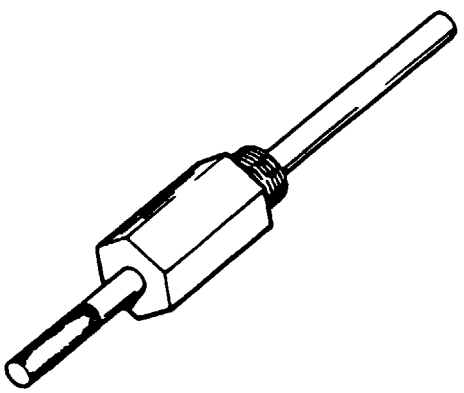

HEATER
SPARK PLUG GAP ADJUSTMENT
TOOL P/N 55998
FABRICATED TOOL
REFER TO FIGURE 13-13

Figure 2-16. Special Tools (cont.)

C227

KEY P/N 405394
AUXILEC INC.
535 BROAD HOLLOW ROAD
MELLVILLE, N.Y 11747

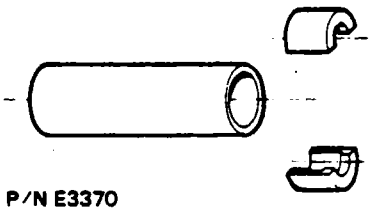

TOOL P/N E3370
AUXILEC INC.
535 BROAD HOLLOW ROAD
MELLVILLE N.Y. 11747

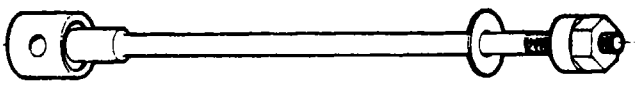

TOOL P/N E3487
AUXILEC INC.
535 BROAD HOLLOW ROAD
MELLVILLE, N.Y. 11747

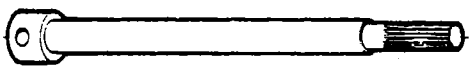

KEY P/N E3392
AUXILEC INC.
535 BROAD HOLLOW ROAD
MELLVILLE, N.Y. 11747

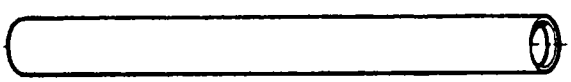

TOOL P/N E3390
AUXILEC INC.
535 BROAD HOLLOW ROAD
MELLVILLE, N.Y. 11747

AUXILEC INC.
535 BROAD HOLLOW ROAD
MELLVILLE, N.Y. 11747

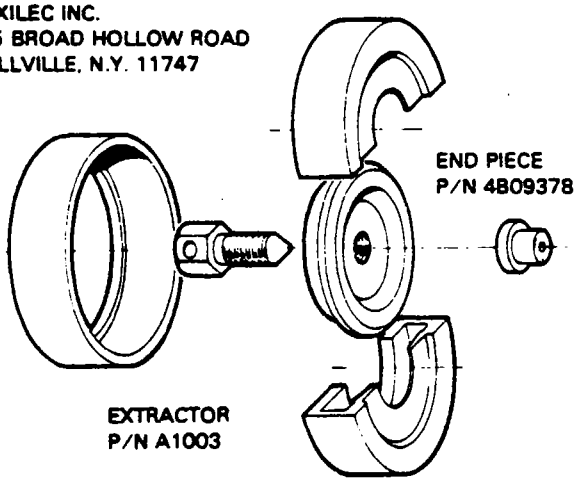

Figure 2-16. Special Tools (cont)

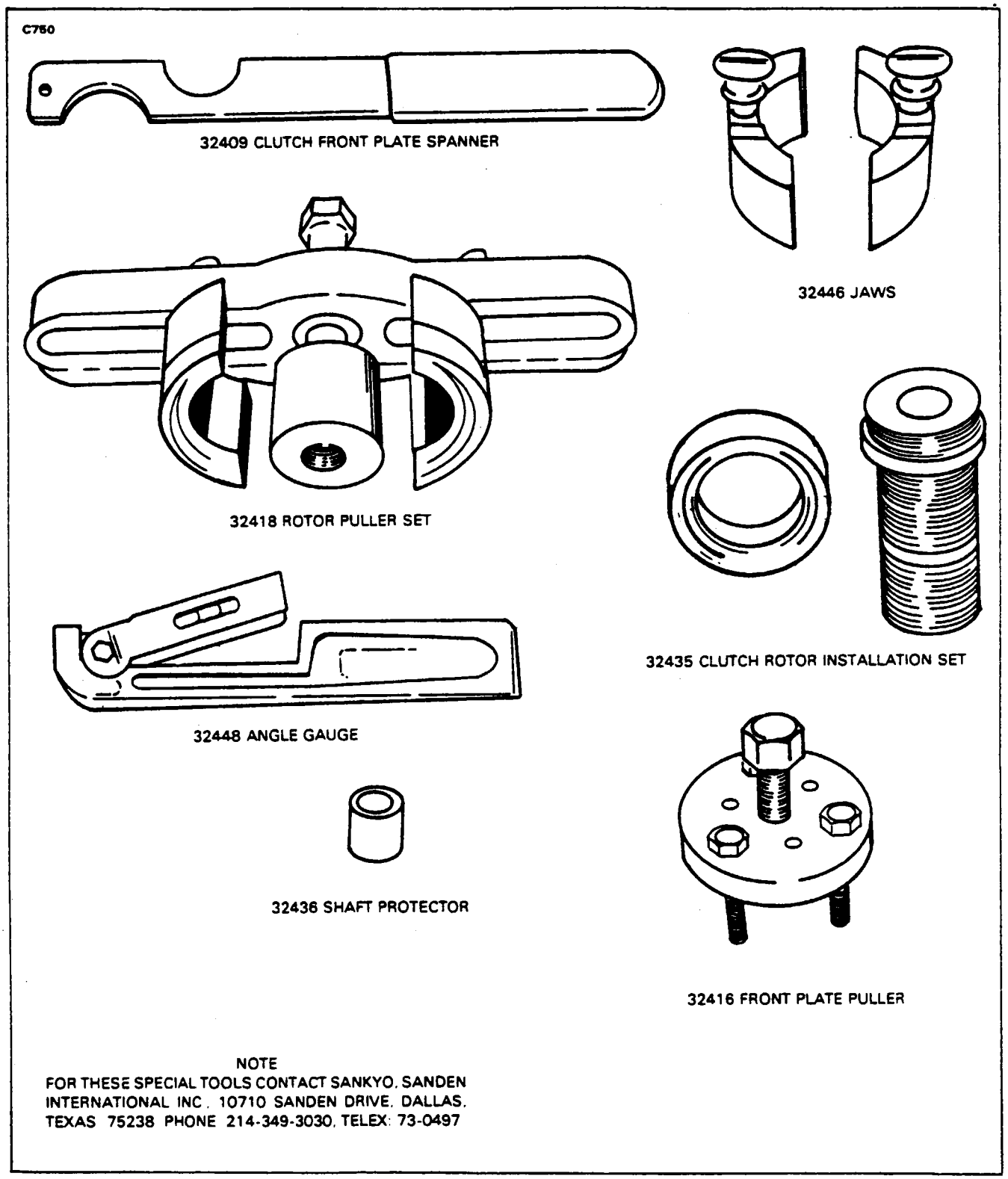

Figure 2-16. Special Tools (cont)

TABLE II-VIII. LIST OF VENDOR PUBLICATIONS

MODEL	VENDOR	PART NUMBER
	ENGINE	
PA-31T	Pratt and Whitney Engine Maintenance Manual	No. 3013242
PA-31TI	Pratt and Whitney Engine Maintenance Manual	No. 3030442
PA-31T2	Pratt and Whitney Engine Maintenance Manual	No. 3021242
	ENGINE MOUNTING SYSTEMS	
All PA-31T Series	LM-423, LM-423R and LM-423S Lord Aerospace Products 1635 West 12th Street Erie, Pennsylvania 16514	Lord Bulletin No. SM-6304
	BATTERY	
PA-31T, PA-31TI	Gulton, Nickel-Cadmium Aircraft Battery Maintenance Manual 212 Durham Ave. Metuchen, N.J. 08840	No. 15382
PA-31T, PA-31TI, PA-31T2	Saft, Nickel-Cadmium Aircraft Battery Operating and Maintenance Manual 711 Industrial Blvd. Valdosta, Georgia 31601	No. DC 3176-5A
PA-31T, PA-31TI, PA-31T2	Marathon Battery, Marathon Nickel-Cadmium Instruction Manual 8301 Imperial Drive P.O. Box 8233 Waco, Texas 76710	No. BA-89
	STARTER-GENERATOR	
PA-31T, PA-31TI	Lear Siegler, Inc./Power Equipment Division Maintenance Manual (Starter-Generators All Models) Overhaul Manual, 23048 Series 17602-T Broadway Ave. Maple Heights, Ohio 44137	 File #23700 File #23202
PA-31T, PA-31TI, PA-31T2	Auxilec Inc. Maintenance and Overhaul Manual 535-T BroadHollow Road Mellville, New York 11747	8013C
All PA-31T Series	HTL Advanced Technology Division 101-T E. Wheeler Ave. Arcadia, CA 91006	30104100

SECTION III
INSPECTION

Paragraph		Aerofiche Grid No.
3-1.	General	1D24
3-2.	Special Inspection for Unusual Conditions	1D24
3-3.	Engine Overtemperature and Overtorque Limits Inspection	1D24
3-4.	Engine Unscheduled Inspection Due to Overspeed, Sudden Stoppage, Loss of Oil and Lightning Strike.	1D24
3-5.	Hard or Overweight Landing	1D24
3-6.	Severe Turbulence	1E1
3-7.	Component Overlimits Inspection.	1E1
3-8.	Inspection of Wing Flap Transmission	1E1
3-9.	Inspection of Wing Flap Transmission Actuator Cable	1E2
3-10.	Reduction of Friction in Wing Flap System	1E7
3-11.	Wing Flap Motor No Load RPM Check	1E7
3-12.	Inspection of Aileron Sprocket and Chain	1E8
3-13	Control Cable Inspection - Standard Procedures	1E10
3-14.	Lock Wiring of V-Band Couplings	1E10
3-15.	Inspection of Flexible Hoses	1E10

SECTION III

INSPECTION

3-1. GENERAL. This section has been superseded by the Piper Continuous Inspection Manual, P/N 761 520 (50 hour) or P/N 761 644 (100 hour) for the PA-31T, PA-31T1, PA-31T1A and for the PA-31T2, Inspection Manual, P/N 761 750 (100 hour).

Required inspection procedures are outlined in Piper Continuous Inspection Manual. Additional copies are available through Piper Service Department. This inspection consists of Routine and Detailed (Event) inspections performed every 50 hours of aircraft service time, thus providing a complete airworthiness inspection of airplane every 200 hours (one complete cycle). Also included are various special inspections required at specific service times other than those arriving on 50 hour events.

This type of inspection was selected by Piper Aircraft Corporation to provide greater utilization of aircraft through use of this planned inspection program.

3-2. SPECIAL INSPECTIONS FOR UNUSUAL CONDITIONS. The following inspections must be performed upon indication of any unusual conditions observed or reported by maintenance personnel or owner/operator of aircraft.

3-3. ENGINE OVERTEMPERATURE AND OVERTORQUE LIMITS INSPECTION. If any overtemperature or overtorque condition has occurred, refer to Table II-VIII for appropriate Pratt and Whitney Engine Maintenance Manual, for necessary inspection procedures and corrective actions.

3-4. ENGINE UNSCHEDULEED INSPECTION DUE TO OVERSPEED, SUDDEN STOPPAGE, LOSS OF OIL AND LIGHTNING STRIKE. If an engine suffers any abnormal operating conditions, inspections and corrective actions detailed in Pratt and Whitney Engine Maintenance Manual, must be performed. Refer to Table II-VIII for appropriate Pratt and Whitney Engine Maintenance Manual.

3-5. HARD OR OVERWEIGHT LANDING OR LANDING GEAR EXTENTION ABOVE V_{LO}. Refer to Piper Service Bulletin 845. This inspection must be performed after a known rough landing is made or when a landing is made while aircraft is known to exceed design landing weight. The following areas and items must be checked throroughly for any unusual conditions:

a. Wrinkled Wing Skin - most easily detected sign of excessive loads having been imposed during a landing.

b. Fuel Leaks - along riveted seams of nacelle fuel tanks.

c. Spar webs, bulkheads, nacelle skins and attachments, fire wall skins, and wing and fuselage stringers.

d. Misalignment of right and left-hand components such as power plants, wings, etc.

3-6. SEVERE TURBULENCE. This inspection should be performed when the aircraft has encountered a gust condition, suspected of exceeding the normal wing loading of the aircraft. The gust tends to accelerate the aircraft while its inertia acts to resist this change. If the combination of gust velocity and airspeed is too severe, the induced stress can cause structural damage. The following areas and items should be checked thoroughly for any unusual conditions:

a. Wrinkled Wing Skins - upper and lower surfaces for excessive buckles or wrinkles with permanent set.

NOTE

Where wrinkles have occurred, a few rivets should be removed and the rivet shanks examined to determine if the rivets have sheared or were highly loaded in shear.

b. Wing Spar Web - inspect all spar webs from the fuselage to the wing tips, through all access and inspection panels available.
c. Check for buckling, wrinkles, and sheared attachments in the area around the nacelles, particularly at the wing leading edge.
d. Check for Fuel Leaks - this could indicate that an overload has broken the sealant and opened the seams of fuel tanks.
e. Fuselage Skins - check upper and lower skins for wrinkles of a diagonal nature; this would be an indication of excessive bending.
f. Empennage - check for wrinkles, buckling or sheared attachments, also the area of attachment of empennage to the fuselage.
g. Landing Gear - if the gear was lowered during the time of severe turbulence, inspect the surrounding surfaces carefully for loose rivets, cracks or buckling. The interior of the wheel well may give further indications of excessive gust conditions.

NOTE

The above inspections cover the critical areas. If excessive damage is found in any of these areas, the inspection should be continued until all the damage is detected.

3-7. COMPONENT OVERLIMITS INSPECTION. If the aircraft has been operated so that any of its components have exceeded the maximum operational limits, check with the appropriate manufacturer for the necessary corrective action.

3-8. INSPECTION OF WING FLAP TRANSMISSION. (Refer to Figure 3-1.) The Dukes flap transmissions are inspected at every 100 hour inspection cycle of the aircraft. The Calco flap transmissions are inspected at the first 500 hour inspection cycle of the airplane (or at 500 hours time-in-service for replacement Calco transmissions, as applicable) and at each 100 hours thereafter. This is accomplished without removal of the transmissions, by the following procedures:

a. Position the flaps in the extended position (Down).
b. Remove the access covers on the lower wing surface to gain access to the flap transmissions.
c. With the use of vise grip pliers and exerting light pressure, grasp the exposed portion of the screw close to the transmission as shown. (Refer to Views A and B.)
d. With the pliers secured to the screw a light pressure will move the pliers and screw as free play in the transmission gear set is taken up in either direction. Do not force the pliers.
e. Place a six inch ruler along the skin surface as shown in View B and measure the overall distance the pliers move.

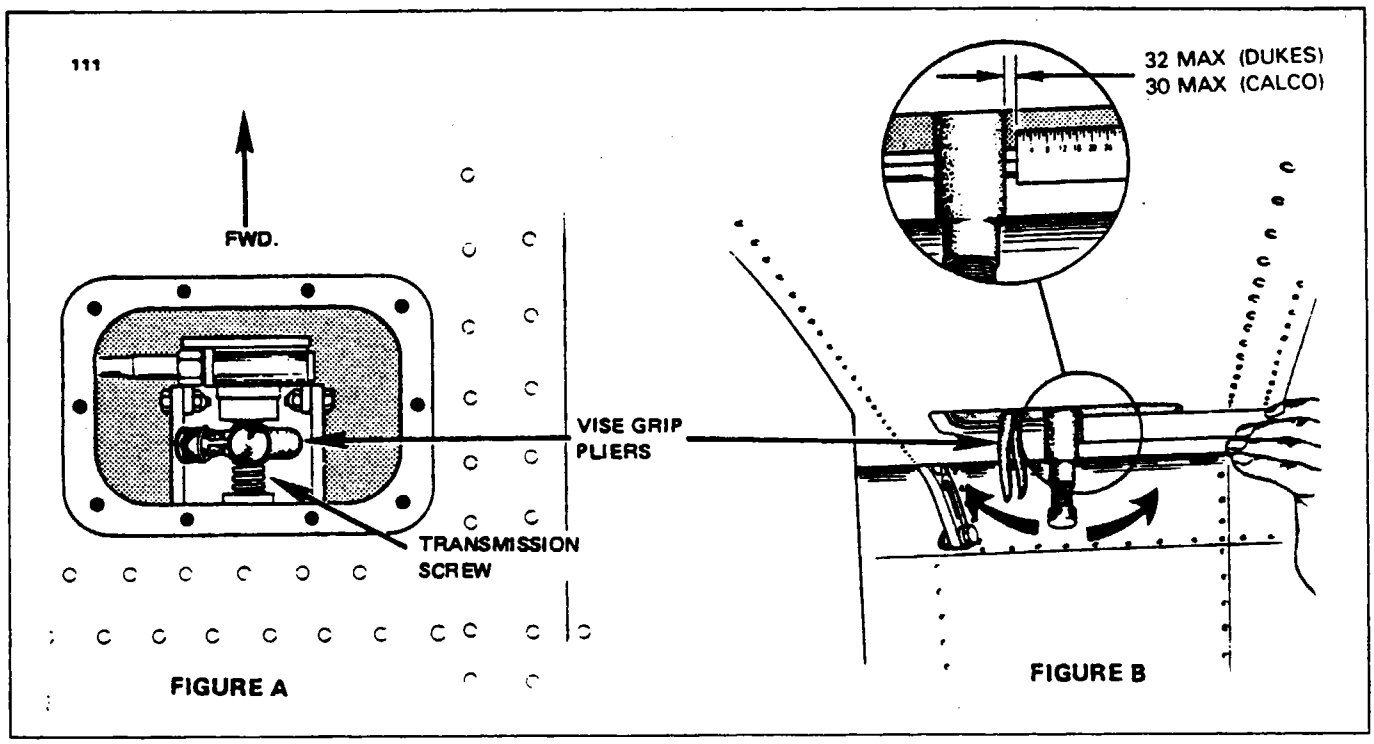

Figure 3-1. Wing Flap Transmission Inspection

f. Should this dimension exceed .32 (5/16) of an inch for the Duke's transmission or .30 of an inch for the Calco transmission, replace the transmission assembly. (See parts catalog for part number.) (Refer to Section V, for transmission removal and installation.)

g. Reinstall the access panels and make appropriate logbook entry.

h. Continue inspection at 100 hour intervals.

3-9. INSPECTION OF WING FLAP TRANSMISSION ACTUATOR CABLE. (Refer to Figure 3-2.)

a. Remove access plate from underside of left and right wing trailing edge, to gain access to flap transmissions.

b. Remove all ty-raps and support clamps along the entire length of both flexible shaft assemblies and inspect the outer housing. If the housing is damaged, replace the flexible shaft assembly.

c. Check the distance between the flexible shaft assembly nut and the transmission to determine if shaft assembly is properly installed.

d. When properly installed, the nut on flexible shaft will bottom or be within 3/16 of an inch of bottoming against the transmission.

e. Disconnect flexible shafts and remove the flap motor. Using caution not to damage the flexible shafts housing, route the flexible shafts outboard through the longitudinal beams.

NOTE

Do not disconnect flexible shaft from transmission at this time.

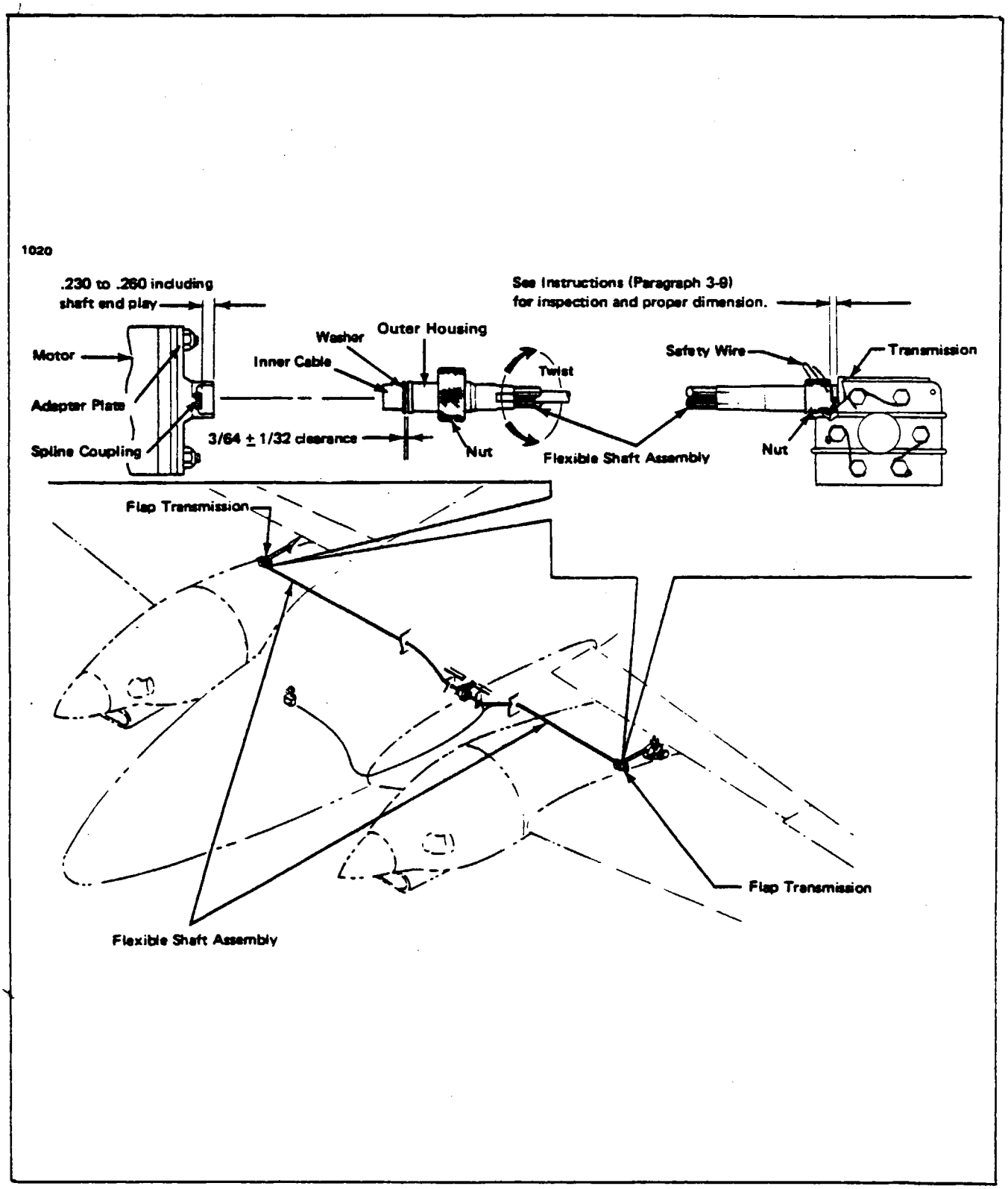

Figure 3-2. Wing Flap Actuator Cable

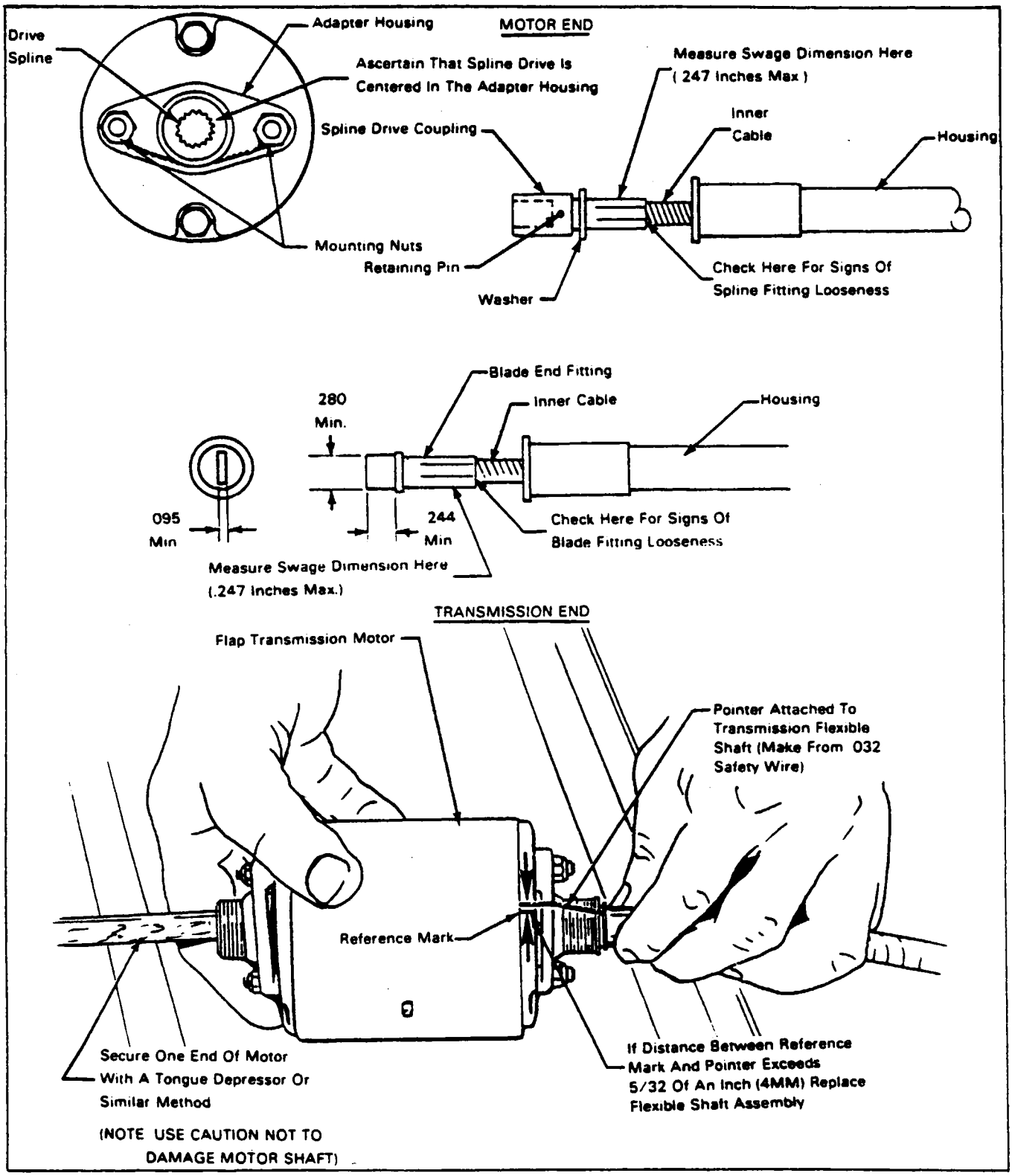

Figure 3-2. Wing Flap Actuator Cable (cont.)

f. Visually inspect the flexible shaft splined drive coupling and retaining pin for evidence of looseness on the cable swage fitting.

g. Inspect the swaged fittings at both ends of the flexible shaft as follows:

1. Expose the swaged portion of the inner cable at the motor end by twisting the outer housing two (2) turns clockwise. The swaged portion of the cable should have six (6) or eight (8) flats clearly visible and free from deep scratches or wear.

2. Using a micrometer, or dial caliper, measure the diameter of the swage at each of the flats at the middle of the swaged portion of the cable. A total of four (4) measurements should be taken. If any of the measurements exceed .273 inch for 6 flats or .294 for 8 flats, replace the drive shaft.

3. Disconnect drive shaft from the flap transmission. Using caution not to damage the shaft housing, route inboard through Sta. 87.50 bulkhead. Inspect the swaged portion of the drive blade fitting end as described in Steps "1" and "2" above.

4. Inspect the drive blade dimension.

h. Inspect the internal splines of the drive coupling for evidence of wear. If splines are distorted or significantly worn, replace the drive shaft. Use the following method to determine if the amount of spline wear is acceptable.

1. Twist a piece of .032 safety wire around the swaged fitting at the motor end of the drive shaft to form a pointer. With one end of the flap motor armature shaft secured engage the opposite end into the flexible shaft spline.

2. Hold the spline end of the flexible shaft securely with one hand, and gently turn the flap motor to remove rotational play in the splines. Place a reference mark on the motor housing adjacent to the wire pointer. Turn the flap motor gently in the opposite direction to remove rotational play and place another reference mark on the motor housing. If the distance between these two marks exceed 5/32 of an inch replace the shaft assembly.

i. While holding the transmission end of the drive shaft stationary, twist the motor end one turn clockwise and release. Inspect for evidence of movement between the inner cable and the swaged fittings at both ends. Turn cable one turn counterclockwise and repeat inspection. If movement or separation between the inner cable and the swage fitting is apparent, replace the flexible shaft assembly.

NOTE

If pliers or similar tool is used to twist cable, wrap cable ends with tape or a cloth to prevent damage.

j. Determine that the inner cable moves freely within the housing, and may be turned easily by hand. If there is any snagging or binding the cable must be replaced.

k. Reassembly of the Flap System:

1. Ascertain that the flap motor shaft is centered within the motor adapter housing.

2. Align and insert tang on shaft assembly into slot in transmission. Tighten nut finger tight and wrench not over 1/16 turn from finger tight. When installed by this method the dimension between the nut and transmission will be as noted in Step d, thus insuring that the end of shaft housing is firmly seated against the transmission. Safety nut with .040 wire.

3. Twist outer housing in proper direction bringing clearance to 3/64 ± 1/32 of an inch.

4. Holding outer housing in this position, insert spline into flap motor, tighten nut finger tight and wrench not over 1/16 turn from finger tight. Safety nut with .040 brass wire.

5. Lubricate both ends of flexible shafts with MIL-G-23827 grease.

6. Reassemble and verify flap system rigging as outlined in (Chapter V) of the appropriate Service Manual.

l. Reinstall the ty-raps, support clamps, floorboards, access panels and make appropriate logbook entry.

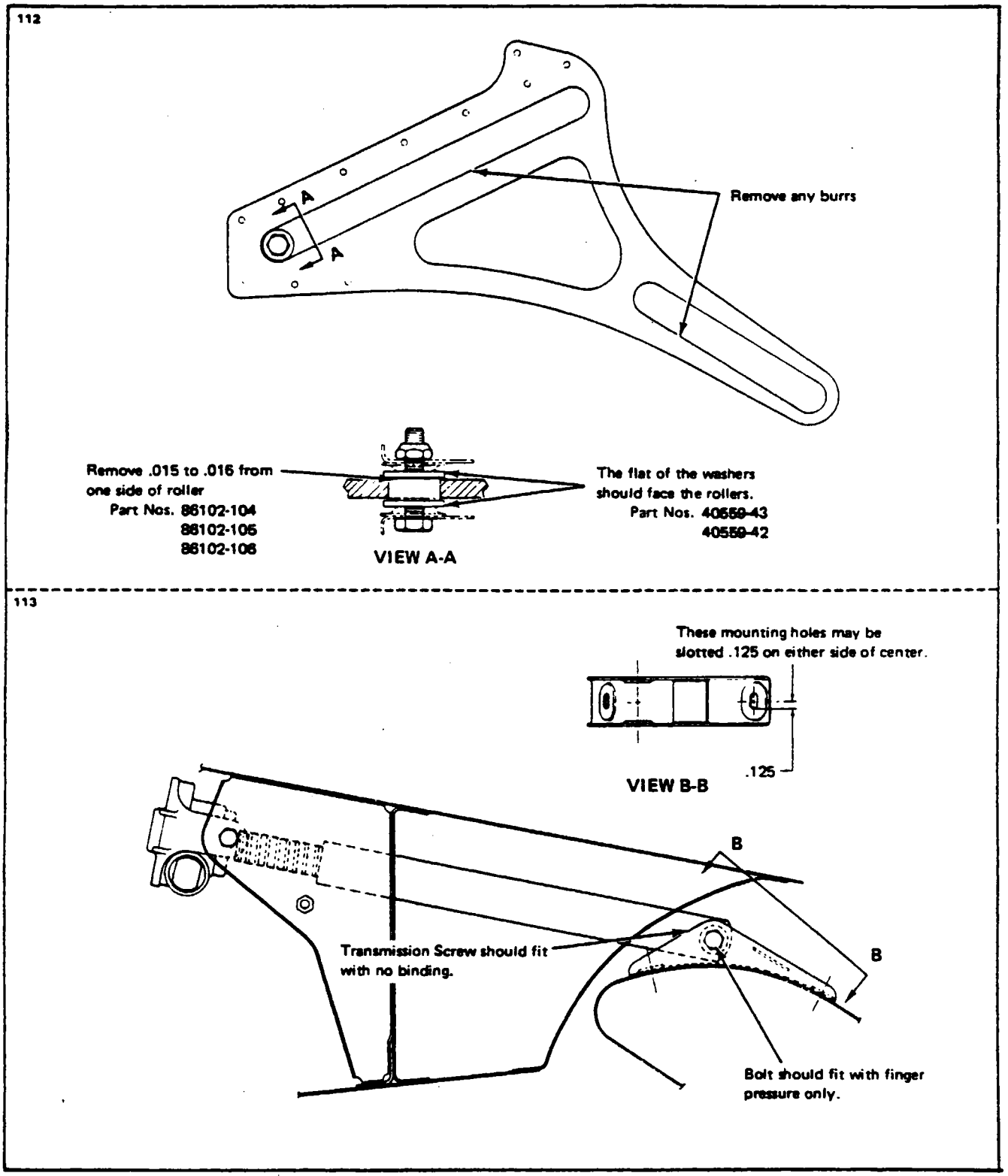

Figure 3-3. Friction Reduction in Wing Flap System

3-10. REDUCTION OF FRICTION IN WING FLAP SYSTEM. (Refer to Figure 3-3.) To insure proper flap system operation and reduce friction on the flap motor, the following inspection and repairs are only required should operational problems exist in the flap system:

a. Remove both right and left flap assemblies from the aircraft. (Refer to Section IV.)

b. Clean all paint and dirt from the top and bottom of the flap tracks.

c. Inspect the flap tracks for any burrs along the track edges. If any are found, remove them with a fine file. Insure that no noticeable depressions are evident at the ends of the track areas. (Refer to Figure 3-3 for specific locations.)

d. Using fine sandpaper, polish the inside surfaces of the flap tracks and lubricate the tracks with light oil, MIL-L-7870 or Dupont Slip Spray No. 6611.

e. Clean all dirt and paint from the flap rollers.

f. On each flap roller, Part Numbers 86102-104, 86102-105 and 86102-106 remove 1/64 or .016 of an inch from one side of each roller. (Refer to Figure 3-3, View A-A.)

g. Polish all flap rollers and lubricate with light oil, MIL-L-7870.

h. Insure that the washers, Part Numbers 40559-43 and 40559-42 used on both sides of the rollers are flat. (Refer to Figure 3-3, View A-A.)

i. Install both flap assemblies on the aircraft. (Refer to Section IV.) Do not connect the flap transmission screws to the flaps at this time.

j. Ascertain that the flap rollers turn freely and that the flaps will move freely in the flap tracks under their own weight through the entire length of the flap tracks.

k. Insure that the flap transmission screw fits into the horn assembly on the flap without any binding.

NOTE

It may be necessary to move the horn assembly to obtain this no binding fit. The mounting holes on the horn assembly may be slotted to gain some adjustment if needed. (Refer to Figure 3-3, View B-B for dimensions of slots.)

l. Ascertain that the transmission bolt at the flap end fits into the screw end and horn assembly with finger pressure only. (Refer to Figure 3-3.)

m. Install the transmission bolt AN4-15, washer AN960-416, and nut AN310-4 only finger tight and install a cotter pin MS24665-134.

n. If not previously accomplished at the regular 100 hour inspection, the flap transmission should be checked in accordance with Paragraph 3-8.

o. Ascertain that the flap transmission cables are installed properly. (Refer to Paragraph 3-9.)

p. Inspect the travel of the flaps in the flap tracks per instructions given in Section V.

q. Ascertain that all wires on the flap relay in the radio compartment are tight.

r. Ascertain that all wires on the flap selector switch are tight.

3-11. WING FLAP MOTOR NO LOAD RPM CHECK. (Refer to Figure 3-4.) This check for demagnetization of the flap actuating motor should be accomplished along with friction reduction per Paragraph 3-10 if flap motor circuit breaker popping has been or remains a problem.

a. With the wing flap motor (1) installed in the aircraft, disconnect both of the flexible drive shafts (4) and remove one of the flex drive adapters (2) from the motor.

b. On the exposed motor splines, paint a white strip on one of the spline teeth.

c. Energize the flap motor with the flap selector switch.

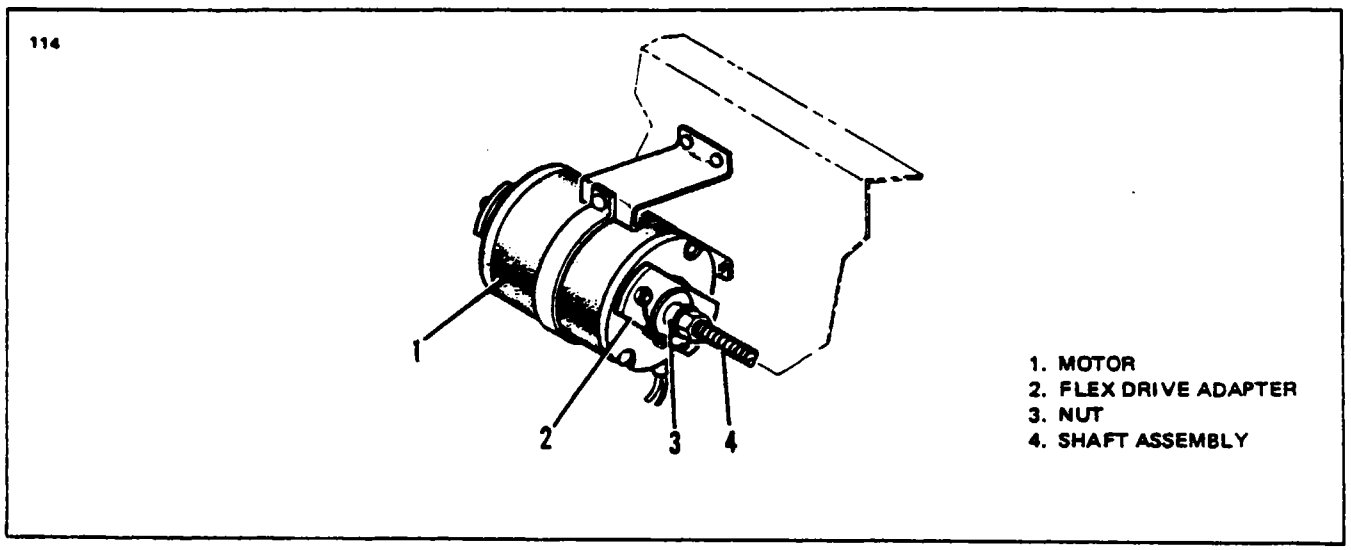

Figure 3-4. Wing Flap Motor

d. With the aid of a Simpson 410 Photo Tachometer or equivalent, hold the probe within one-half of an inch of the painted rotating spline shaft and observe the RPM reading on the meter. RPM in excess of 11,000 will indicate a demagnetized motor which should be replaced.

e. In the event that the above meter cannot be obtained, another method can be used to make the check. This would require the removal of the motor from the aircraft and using a hand held tachometer and 24-volt D.C. power source. (Refer to Section V for removal and installation of flap actuator motor.) If this cannot be accomplished, remove the motor and take it to a local electric motor overhaul facility for the RPM check.

f. Reassemble and insure proper spline shaft engagement per Paragraph 3-9.

NOTE

Do not perform no load RPM check unless a problem of circuit breaker popping exists or has existed with the flap motor that is still in the system.

3-12. INSPECTION OF AILERON SPROCKET AND CHAIN. (Refer to Figure 3-5.)

a. To determine if corrective action is required because of misalignment of the pilot's control wheel sprocket and mating aileron control chain, it will be necessary to perform the following checks at each 100 hour inspection of the airplane:

NOTE

To adequately perform the following checks, the aircraft should be located in an area relatively free of excessive noise and vibration.

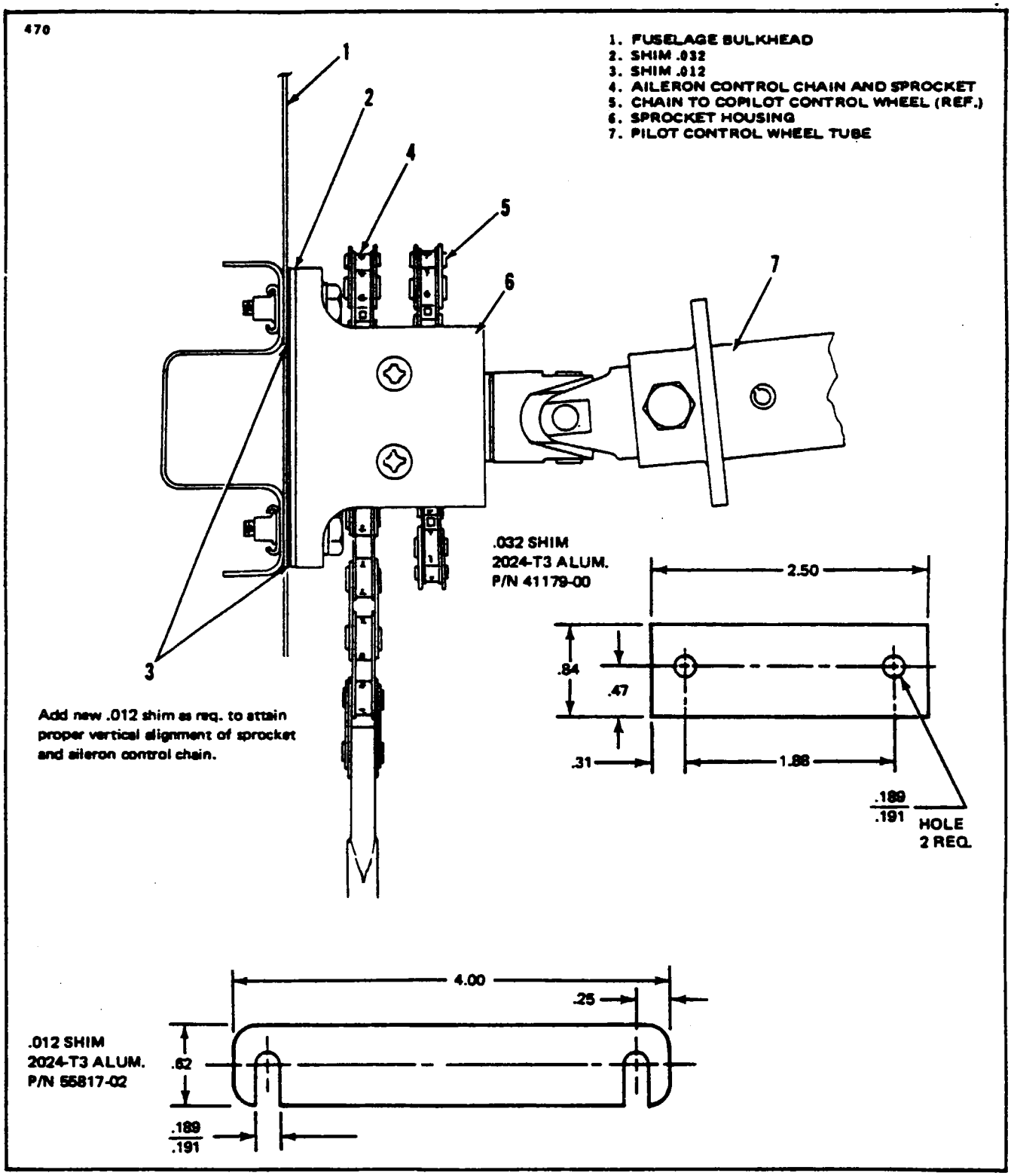

Figure 3-5. Inspection of Aileron Sprocket and Chain

1. Gently grasp the pilot's control wheel with both hands. Slowly rotate the wheel while carefully listening for sounds of roughness or the feel of uneven action when the aileron chain links pass over each tooth of the sprocket.
2. With one mechanic slowly rotating the pilot's control wheel, and another mechanic (with flashlight and mirror) observing the movement of the aileron chain over the sprocket, observe for smooth flow of the chain links over the sprocket throughout the total travel of the control wheel.

b. If roughness or uneven action is not felt, heard or seen, no further action is required.

c. If roughness or uneven action is detected, it could be due to lack of lubrication on the chain (if so, clean and lubricate), bent teeth on the sprocket (if so, sprocket must be replaced) or sprocket/control chain misalignment that must be corrected as follows:
   1. Inspect at outboard end of sprocket housing to determine if the .032 shim is installed between the offset in the housing and the bulkhead. Install shim if it is not present. This shim will ensure proper horizontal alignment.
   2. To attain proper vertical alignment, install new .012 shims between the top or bottom of the sprocket housing and the bulkhead, as required, to ensure a smooth flow of the chain links over the sprocket.

3-13. CONTROL CABLE INSPECTION - STANDARD PROCEDURES. See Appendix, Section V, Grid 1L18.

3-14. LOCK WIRING OF V-BAND COUPLINGS (Refer to Figure 3-6). Field reports indicate "T-bolts" in the V-band couplings installed in some Piper airplanes have broken. The failure of a T-bolt can allow the coupling to separate, permitting hot exhaust gases or bleed air to escape, creating a fire hazard. See latest Piper Service Bulletin No. 884. Ensure that all V-band couplings in the exhaust, bleed air or cabin heat systems are lock wired as follows:

a. Refer to the applicable parts catalog to determine the number and location of V-band couplings installed in your airplane.
b. Inspect all V-band Couplings for security and integrity of T-bolts and lock wire (if installed).
c. If lock wire is damaged or missing, lock wire coupling using MS20995-C41 wire.

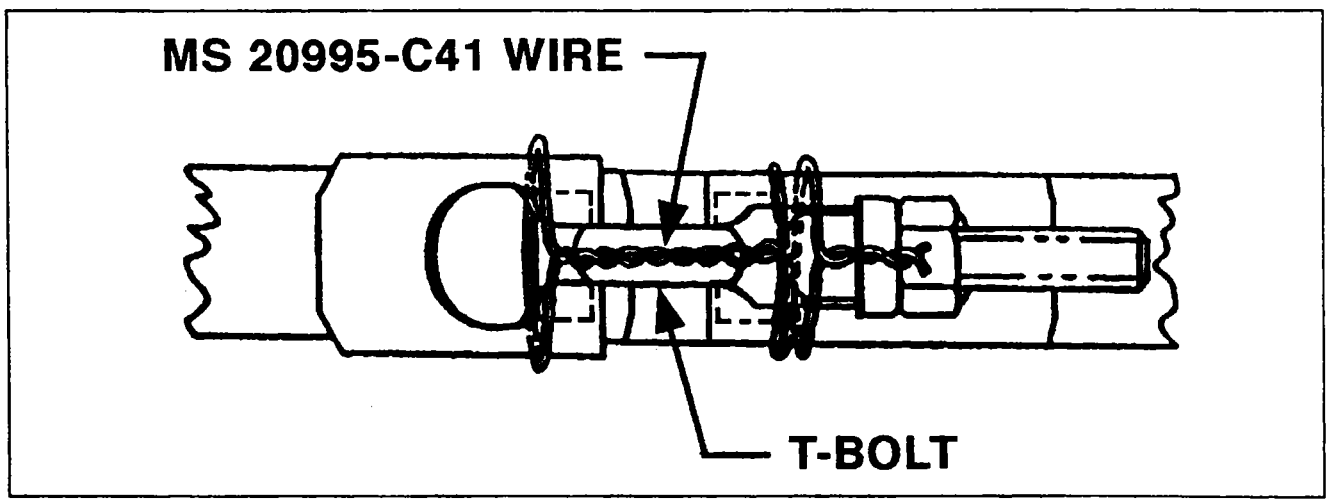

Figure 3-6. V-Band Coupling Lock Wire

3-15. INSPECTION OF FLEXIBLE HOSES. It is recommended that flexible hoses be inspected every 100 hours. especially those in the engine compartments. When inspecting the hoses, look for the following conditions:

a. Check each installation to be sure the hose is not kinked, twisted, or distorted. Also check for evidence of abrasion, cuts and/or broken wires. It should be noted that random broken wires are acceptable since wire breaks sometimes occur during manufacture. A general rule of thumb is to discard a hose if two or more broken wires are found per plait (braid) or more than six broken wires per lineal foot. Broken wires in an area where kinking is evident is also a cause for rejection.

NOTE

During the manufacturing process, a condition known as "rubber strike through" occasionally occurs. This condition is such that rubber material protrudes through the wire braid cover. Although it exhibits an unpleasant appearance, it has no affect on the quality of the hose.

b. Check each assembly for deterioration, ply separation of cover or braid, cracks, weather checking, lack of flexibility, blisters or bulging, collapse, or sharp bending. Blisters that form on the outer synthetic cover, however, do not necessarily affect the serviceability of the hose. If a blister is discovered, remove the hose from the aircraft and puncture the blister with a pin. If the blister collapses, and only air emerges. pressure test the hose at 1.5 times the system operating pressure and make sure no leakage occurs. If fluid leaks from the hose during the test or when the blister is punctured, reject the hose assembly.

NOTE

Puncturing the outer cover of the hose may permit entry of corrosive elements that could attack the wire braiding and ultimately result in failure. For this reason, puncturing the outer cover as previously described should be avoided if possible.

c. If weather checking, or small cracks in the external surface of the hose are found, the hose may be regarded as serviceable provided the cracks do not penetrate the first braid.

d. If the age or the condition of the hose as just described warrants proof of integrity, the hose should be removed and inspected internally. When inspecting the inside of the hose, look for evidence of deterioration, tube collapse, cut rubber, wire braid puncture, or restriction. To inspect hoses with elbow fittings, a flexible inspection light and viewer may be used, or an inspection ball as described in Table III-I.

e. Should any hose be questionable as to it's serviceability, a proof pressure test should be accomplished. It is recommended that the hose assembly be pressure tested at generally twice recommended operating pressure for the specific hose. (Refer to Table III-I.)

TABLE III-I. BALL DIAMETERS FOR TESTING HOSE RESTRICTIONS

Hose Size	Ball Size
- 4	5/64
- 5	9/64
- 6	13/64
- 8	9/32
- 10	3/8
- 12	1/2
- 16	47/64
- 20	61/64

TABLE III-II. HOSE SPECIFICATIONS

SINGLE WIRE BRAID FABRIC COVERED

MIL PART NO	TUBE SIZE O.D.	HOSE SIZE I.D	HOSE SIZE O D	RECOMM OPER. PRESS	MIN BURST PRESS.	MAX. PROOF PRESS	MIN. BEND RADIUS
MIL-H-8794- 3-L	3/16	1/8	45	3,000	12,000	6,000	3.00
MIL-H-8794- 4-L	1/4	3/16	.52	3,000	12,000	6,000	3 00
MIL-H-8794- 5-L	5/16	1/4	.58	3,000	10,000	5,000	3.38
MIL-H-8794- 6-L	3/8	5/16	67	2,000	9,000	4,500	4 00
MIL-H-8794- 8-L	1/2	13/32	77	2,000	8,000	4,000	4 63
MIL-H-8794-10-L	5/8	1/2	92	1,750	7,000	3,500	5 50
MIL-H-8794-12-L	3/4	5/8	1 08	1,500	6,000	3,000	6 50
MIL-H-8794-16-L	1	7/8	1 23	800	3,200	1,600	7 38
MIL-H-8794-20-L	1 1/4	1 1/8	1 50	600	2,500	1,250	9 00
MIL-H-8794-24-L	1 1/2	1 3/8	1 75	500	2,000	1,000	11 00
MIL-H-8794-32-L	2	1 13/16	2.22	350	1,400	700	13.25
MIL-H-8794-40-L	2 1/2	2 3/8	2 88	200	1,000	300	24 00
MIL-H-8794-48-L	3	3	3.56	200	800	300	33 00

Construction: Seamless synthetic rubber inner tube reinforced with one fiber braid, one braid of high tensile steel wire and covered with an oil resistant rubber impregnated fiber braid.

Identification: Hose is identified by specification number, size number, quarter year and year, hose manufacturer's identification.

Uses: Hose is approved for use in aircraft hydraulic, pneumatic, coolant, fuel and oil systems

Operating Temperatures:
Sizes -3 thru -12: Minus 65°F to plus 250°F

Sizes -16 thru -48: Minus 40°F to plus 275°F

NOTE: Maximum temperatures and pressures should not be used simultaneously

MULTIPLE WIRE BRAID RUBBER COVERED

MIL PART NO	TUBE SIZE O.D	HOSE SIZE I D	HOSE SIZE O.D	RECOMM OPER PRESS	MIN BURST PRESS	MAX. PROOF PRESS	MIN. BEND RADIUS
MIL-H-8788- 4-L	1/4	7/32	63	3,000	16,000	8,000	3.00
MIL-H-8788- 5-L	5/16	9/32	70	3,000	14,000	7,000	3 38
MIL-H-8788- 6-L	3/8	11/32	77	3,000	14,000	7,000	5 00
MIL-H-8788- 8-L	1/2	7/16	86	3,000	14,000	7,000	5 75
MIL-H-8788-10-L	5/8	9/16	1.03	3,000	12,000	6,000	6 50
MIL-H-8788-12-L	3/4	11/16	1 22	3,000	12,000	6,000	7 75
MIL-H-8788-16-L	1	7/8	1 50	3,000	10,000	5,000	9 63

Hose Construction: Seamless synthetic rubber inner tube reinforced with one fabric braid, two or more steel wire braids, and covered with a synthetic rubber cover (for gas applications request perforated cover)

Identification: Hose is identified by specification number, size number, quarter year and year, hose manufacturer's identification

Uses: High pressure hydraulic, pneumatic, coolant, fuel and oil

Operating Temperatures:
Minus 65°F to plus 200°F

SECTION IV
STRUCTURES

Paragraph		Aerofiche Grid No.
4-1.	Introduction	1E17
4-2.	Description	1E17
4-2A	Fuselage	1E20
	4-2B. Bulkhead Inspection	1E20
4-3.	Wing Group	1E20
	4-4. Wing Tip	1E20
	4-5. Removal of Wing Tip (Without Tip Tanks)	1E20
	4-6. Repair of Wing Tip	1E20
	4-7. Installation of Wing Tip (Without Tip Tanks)	1E20
	4-8. Removal and Installation of Wing Tip Tanks	1E20
4-9.	Aileron	1E20
	4-10. Removal of Aileron	1E20
	4-11. Installation of Aileron	1E20
4-12.	Aileron Trim Tab	1E21
	4-13. Removal of Aileron Trim Tab	1E21
	4-14. Installation of Aileron Trim Tab	1E21
4-15.	Flap	1E21
	4-16. Removal of Flap	1E21
	4-17. Installation of Flap	1E22
4-18.	Wing	1E22
	4-19. Removal of Wing	1E22
	4-20. Installation of Wing	1E24
4-21.	Empennage Group	1F10
4-22.	Elevator	1F10
	4-23. Removal of Elevator	1F10
	4-23a. Elevator Butt Rib Inspection	1F10
	4-24. Installation of Elevator	1F10
4-25.	Elevator Trim Tab	1F10
	4-26. Removal of Elevator Trim Tab	1F11
	4-27. Installation of Elevator Trim Tab	1F11
4-28.	Horizontal Stabilizer	1F11
	4-29. Removal of Horizontal Stabilizer	1F11
	4-30. Installation of Horizontal Stabilizer	1F11
4-31.	Rudder	1F12
	4-32. Removal of Rudder	1F12
	4-33. Installation of Rudder	1F12
4-34.	Rudder Trim Tab	1F12
	4-35. Removal of Rudder Trim Tab	1F12
	4-36. Installation of Rudder Trim Tab	1F12

Paragraph		Aerofiche Grid No.
4-37.	Vertical Stabilizer (Fin)	1F12
	4-38. Removal of Vertical Stabilizer (Fin)	1F12
	4-39. Installation of Vertical Stabilizer (Fin)	1F13
4-40.	Windshield	1F13
	4-41. Removal of Windshield	1F13
	4-42. Installation of Windshield	1F13
	4-42a. Windshield Inspection	1F14
	4-43. Heated Windshield Check	1F14
4-44.	Windshield Wiper Mechanism	1F14
	4-45. Removal of Wiper Mechanism.	1F14
	4-46. Installation of Wiper Mechanism	1F15
	4-47. Wiper Blade and Arm Removal	1F15
	4-48. Wiper Blade and Arm Installation	1F22
	4-49. Wiper Blade and Arm Adjustment	1F22
4-50.	Side Windows.	1F22
	4-51. Removal of Side Windows	1F22
	4-52. Installation of Side Windows	1F22
	4-52a. Window Repairs / Rework Procedure	1F22
	4-53. Emergency Exit Window	1G2
	4-53a. Inspection and Servicing of Emergency Exit Window	1G2
	4-54. Removal of Eyebrow Window (PA-31T-7400002 to 31T-7620057)	1G2
	4-55. Installation of Eyebrow Window (PA-31T-7400002 to 31T-7620057)	1G2
4-55a.	Storm Window	1G2
	4-55b. Removal of Storm Window Assembly	1G2
	4-55c. Installation of Storm Window Assembly.	1G4
4-56.	Nose Cone	1G4
	4-57. Removal of Nose Cone	1G4
	4-58. Installation of Nose Cone	1G4
4-59.	Cabin Entrance Door	1G4
	4-60. Removal of Cabin Entrance Door	1G4
	4-61. Inspection of Cabin Entrance Door	1G4
	4-62. Installation of Cabin Entrance Door	1G5
	4-63. Cabin Entrance Door Latch Mechanism	1G5
	4-64. Removal of Latching Mechanism	1G5
	4-65. Installation of Latching Mechanism	1G5
	4-66. Adjustment of Latching Mechanism	1G6
4-67.	Cabin Door Auxiliary Lock	1G6
	4-68. Removal of Auxiliary Lock	1G6
	4-69. Installation of Auxiliary Lock	1G6

Paragraph		Grid No.
	4-70. Removal of Handle (Inside)	1G9
	4-71. Cabin Entrance Door Seal Assembly	1G9
	4-72. Removal of Cabin Door Seal	1G9
	4-73. Installation of Cabin Door Seal	1G9
4-74.	Cabin Entrance Door Step Assembly	1G10
	4-75. Removal of Steps	1G10
	4-76. Installation of Steps	1G10
4-77.	Cargo Door	1G10
	4-78. Removal of Cargo Door	1G10
	4-79. Installation of Cargo Door	1G10
	4-80. Cargo Door Latch Assembly	1G11
	4-81. Removal of Cargo Door Latch Assembly	1G11
	4-82. Installation of Cargo Door Latch Assembly	1G11
	4-82a. Seal Assembly - Cargo Door	1G11
	4-82b. Removal of Cargo Door Seal	1G11
	4-82c. Installation of Cargo Door Seal	1G11
4-83.	Forward Baggage Door	1G11
	4-84. Removal of Forward Baggage Door	1G11
	4-85. Installation of Forward Baggage Door	1G11
	4-86. Removal of Forward Baggage Door Latch Assembly	1G13
	4-87. Installation of Forward Baggage Door Latch Assembly	1G13
	4-88. Adjustment of Forward Baggage Door Latch	1G14
4-89.	Control Surface Balancing	1G14
	4-90. Checking Control Surface Balance	1G14
	4-91. Balancing Equipment.	1G14
	4-92. Balancing Definitions.	1G14
	4-93. Aileron Balancing Procedure	1G21
	4-94. Elevator Balancing Procedure	1G21
	4-95. Rudder Balancing Procedure	1G22
	4-96. Elevator Control System Friction Measurement	1G23
	4-97. Checking Elevator Trim Tab Free Play	1G23
	4-97a Checking Aileron Trim Tab Free Play	1G24
	4-97b. Checking Rudder Trim Tab Free Play	1G24
4-98.	Structural Repairs	1H2
	4-99. Fuselage Sealing	1H2
	4-100. List of Equipment	1H7
	4-101. List of Materials	1H7
	4-102. Surface Preparation	1H10
	4-103. Material Preparation	1H10
	4-104. Application of Sealants	1H11

Paragraph		Grid No.
	4-105. Sealing Faying Surfaces	1H11
	4-106. Sealing Joggles	1H11
	4-107. Sealing Holes and Voids	1H11
	4-108. Holes and Voids in Cold Air Duct Work	1H11
	4-109. Sealing Seams and Joints	1H11
	4-110. Sealing Fasteners	1H14
	4-111. Sealing - AN - Standard Bulkhead Fittings	1H14
	4-112. Sealing Electrical Harness	1H14
	4-113. Application of Release Agent	1H17
	4-114. Sealing Formed-in-Place Gaskets	1H17
	4-115. Removal of Sealant	1H17
	4-116. Equipment Clean Up	1H17
4-117.	Fiberglass Repairs	1H17
	4-118. Fiberglass Touch Up and Surface Repairs	1H19
	4-119. Fiberglass Fracture and Patch Repairs	1H20
4-120.	Repainting with Polytane Enamel (Polyurethane)	1H21
	4-121. Scratch Touch Up on Aluminum Surface	1H21
	4-122. Coating Procedure for New Aluminum Panels - Non Alodined	1H21
	4-123. Coating Procedure for Alodined Aluminum	1H21
	4-124. Mixing Instructions for Primers and Topcoats	1H21
	4-125. Mixing Instructions for Polytane Enamel	1H22
4-126.	Cabin Door Snubber	1H23
	4-127. Description and Principles of Operation of Door Snubber	1H23
	4-128. Filling Snubber Assembly.	1H23
	4-129. Removal of Door Snubber	1H24
	4-130. Installation of Door Snubber.	1H24
4-131.	Corrosion Control	1H24
	4-132. General	1H24
	4-133. Forms of Corrosion	1H24
	4-134. Conditions Affecting Corrosion	1I1
	4-135. Inspection	1I1
	4-136. Corrosion Removal and Control	1I2
4-137	Radome Boot	1I3
	4-138. List of Materials	1I3
	4-139. Removal of Radome Boot	1I3
	4-140. Preparation and Installation of Radome Boot	1I3
	4-141. Inspection of Radome Boot	1I4
4-142.	Erosion Shoe	1I4
	4-143. List of Materials.	1I4
	4-144. General.	1I4
	4-145. Removal of Erosion Shoe	1I5
	4-146. Preparation and Installation of Erosion Shoe	1I5

SECTION IV

STRUCTURES

4-1. INTRODUCTION. This section contains information explaining the removal and installation procedures for the structural surfaces of the airplane. It also includes structural repairs and control surface balancing along with fuselage sealing.

NOTE

When torquing structural assemblies, standard torque values are to be used as found in Section II, or FAA Advisory Circular 43.13-1, unless otherwise stated in this section.

4-2. DESCRIPTION. The fuselage is an all metal semi-monocoque structure which consists of bulkheads, stringers, stiffeners and longitudinal beams, all of which the outer skin is riveted to. The fuselage is pressurized on the PA-31T and PA-31T1 between bulkhead 81.00 and 274.00 and between bulkhead 57.00 and 274.00, the PA-31T2 fuselage is pressurized. Windows include a two piece windshield, windows along the right and left sides of the fuselage with a storm window for the pilot. A 25.75 by 19.75 inch emergency exit window is on the right side of the fuselage and is removable when the release, which is located above the window is pulled. This window is sealed when it is installed in the fuselage and must be carefully reinstalled whenever removed to maintain the pressure seal. The cabin entrance door is located on the left side of the fuselage just aft of the wing. It is a one piece door which swings to open and provides cabin entrance steps. A snubber may be installed to prevent the door from dropping too fast when it is opened. The cargo door is located immediately aft of the cabin entrance door. This door swings up but only after the cabin entrance door has been opened. This door permits rapid loading and storage of cargo and also facilitates loading items normally too bulkly to pass through the cabin entrance door. All wiring, plumbing, and control cables passing through the pressurized portion of the fuselage are sealed to minimize air leakage.

WARNING

No holes should be added on any of the reinforcement channels and the forward pressure bulkhead. Any repair, modification, or removal of floorboard cover plates for inspection which creates a break in the pressure seal is considered the responsibility of the owner or facility performing the work.

Each wing panel is an all metal, full cantilever, semi-monocoque type construction with a removable fiberglass tip on the PA-31T1. Installed in each wing are two bladder type fuel cells, along with a wet nacelle tank and a tip tank. (Tip tank optional on PA-31T1.) The main landing gear is enclosed in wheel wells built into the lower surface of each wing and is enclosed by doors when retracted. Attached to each wing is the power plant, aileron and flap. The right aileron incorporates a trim tab which is adjustable through a control in the cockpit. The full length I beam type spars extend into the fuselage and are joined with high strength butt fittings in the center of the fuselage making, in effect, a continuous main spar. The main spar is also attached to the side of the fuselage as are the front and rear spars.

The all metal empennage group is a full cantilever design consisting of a vertical stabilizer (fin), rudder, right and left horizontal stabilzer and elevator, all with removable fiberglass tips. The rudder and both halves of the elevator have a trim tab attached that are controllable from the cockpit. Both the vertical and horizontal stabilizers incorporate two channel main spars that run the full length of the stabilizers and attach to the aft bulkhead assembly of the fuselage.

All aluminum components of the pressure envelope and exterior surfaces are alodine treated and then zinc chromate primed to resist corrosion.

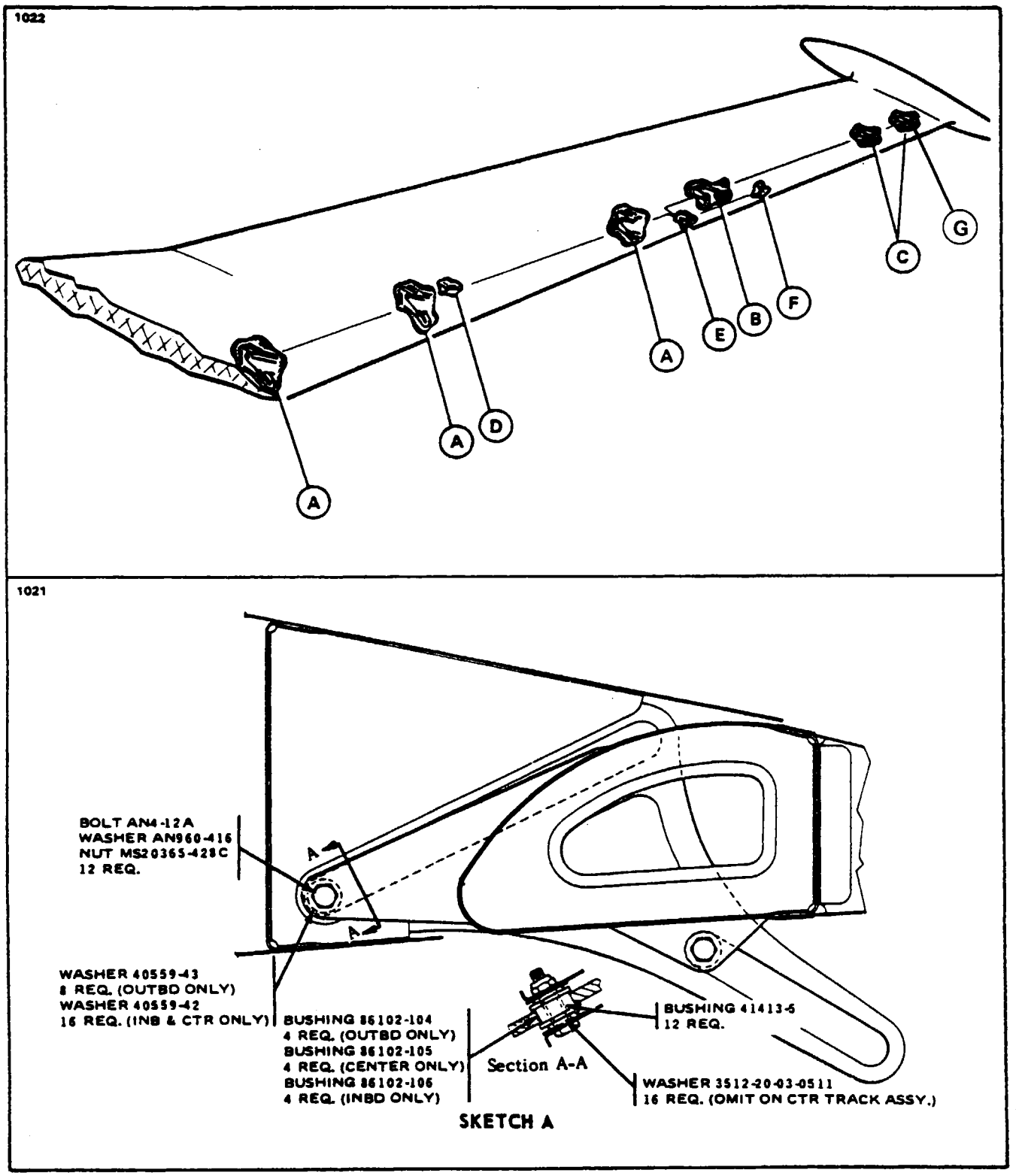

Figure 4-1. Aileron and Flap Installation

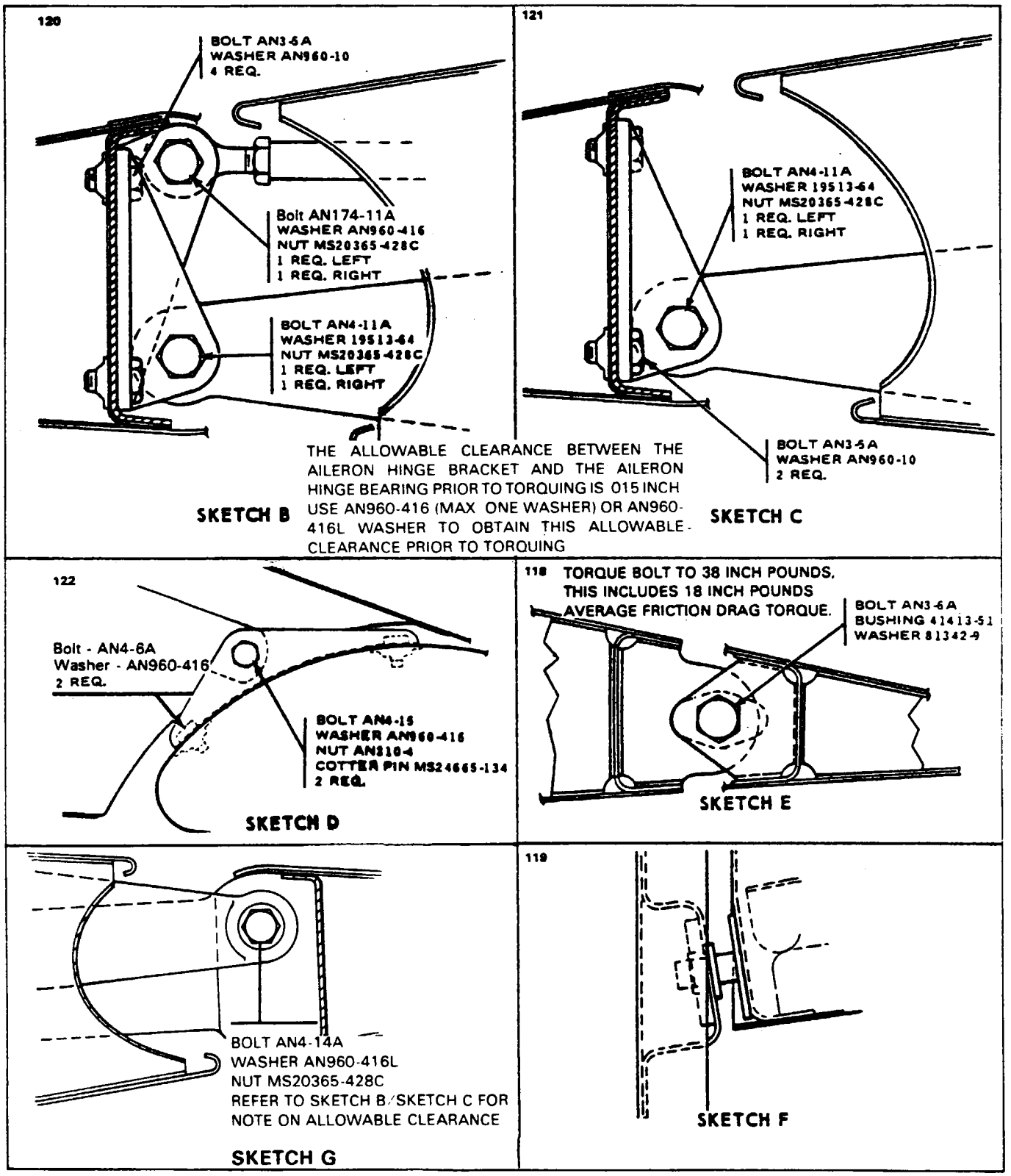

Figure 4-1. Aileron and Flap Installation (cont.)

4-3. WING GROUP.

4-4. WING TIP.

4-5. REMOVAL OF WING TIP (WITHOUT TIP TANKS).

a. Remove the screws attaching wing tip to wing.

b. Pull wing tip outward slightly and disconnect navigation light positive wire at the quick-disconnect fitting. Remove screw securing ground wire to the wing structure. Disconnect wing tip strobe light plug if installed.

c. Remove the wing tip.

4-6. REPAIR OF WING TIP. The wing tip may be repaired in accordance with fiberglass repair procedures in the structural repairs portion of this section.

4-7. INSTALLATION OF WING TIP (WITHOUT TIP TANKS).

a. Attach ground wire terminal to wing structure and connect positive electrical leads together.

b. Position wing tip on wing and start all screws with washers.

c. With all screws in place, tighten.

4-8. REMOVAL AND INSTALLATION OF WING TIP TANK. (Refer to Section IX.)

4-9. AILERON.

4-10. REMOVAL OF AILERON. (Refer to Figure 4-1.)

a. Remove rear fairing between the wing and wing tip tank.

b. Remove the wing tip aft attachment rib.

c. Disconnect the aileron control rod.

d. At the right aileron, disconnect trim tab control rod.

e. Remove the hinge bolts and remove the aileron.

4-11. INSTALLATION OF AILERON. (Refer to Figure 4-1.)

a. Place aileron in position. Install hinge bolts. (Refer to Figure 4-1, Sketch B and C, for allowable clearance between aileron hinge bracket and aileron hinge bearing prior to torquing.) Torque bolts.

b. If the right aileron was removed, connect the trim tab control rod.

c. Connect the aileron control rod.

d. Attach the wing tip attachment rib.

e. Install rear fairing between the wing and wing tip tank.

f. Check aileron for proper operation. Rigging and adjustment procedure may be found in Section V.

4-12. AILERON TRIM TAB.

4-13. REMOVAL OF AILERON TRIM TAB. (Refer to Figure 4-1.)

a. Disconnect the control rod at the tab.

b. Remove the inboard hinge bolt.

c. Pull the tab back and inboard enough to remove the outboard hinge pin from its bushing. Remove the tab.

4-14. INSTALLATION OF AILERON TRIM TAB. (Refer to Figure 4-1.)

a. Insert the tab control rod through the aileron and insert the outboard hinge pin into its bushing.

b. Position the inboard hinge brackets, install hinge bolt and torque to 38 inch-pounds, this includes 18 inch-pounds average friction drag torque.

c. Connect the tab control rod.

4-15. FLAP.

4-16. REMOVAL OF FLAP. (Refer to Figure 4-1.)

a. Lower flap to within a few degrees of full extension.

b. At the left flap, disconnect position sender rod by removing cotter pin from the foward end of the rod.

c. Disconnect flap control tube at the flap. Do not rotate control tube unless it is intended to adjust the flap.

d. Remove the upper roller assemblies from flap brackets.

e. Remove the lower roller assemblies and remove flap.

4-17. INSTALLATION OF FLAP. (Refer to Figure 4-1.)

a. Put the flap in position and install the lower roller assemblies on the flap brackets and torque bolts.

b. Install the upper roller assemblies and torque bolts.

c. Connect the control tube.

d. If the left flap was removed, connect the position sender rod.

e. Check flap for proper operation. Rigging and adjustment procedure may be found in Section V.

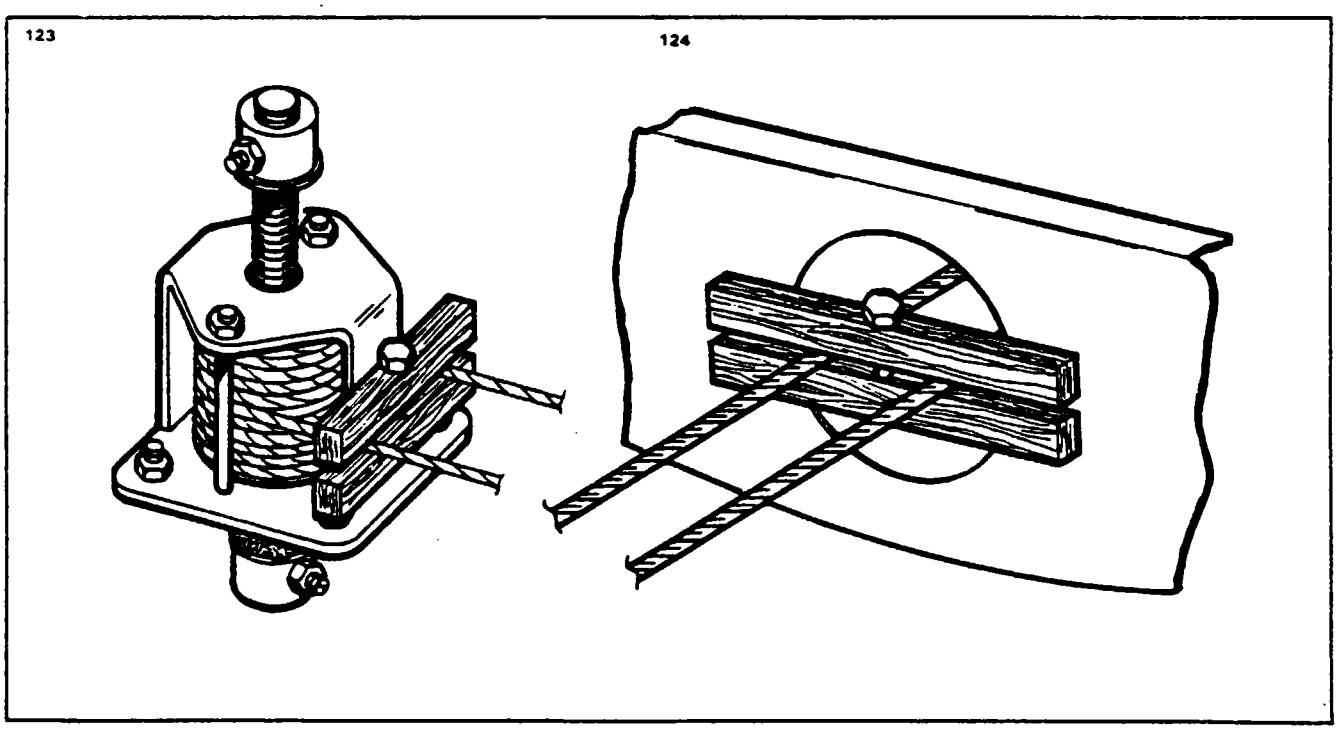

Figure 4-2. Methods of Blocking Control Cables

4-18. WING.

4-19. REMOVAL OF WING. (Refer to Figure 4-4.)

NOTE

Fuselage station reference points are provided in order to facilitate the location of various components in the PA-31T, PA-31T1 and PA-31T2. Subtract 24 inches for all station points forward of fuselage station 135 for the PA-31T2, to find the proper location of various components in this aircraft.

a. Close the fuel shutoff valve and crossfeed valve; then drain the fuel from the wing to be removed. (Refer to Draining The Fuel System, Section II.)

b. Remove the engine from the wing to be removed. (Refer to Removal of Engine, Section VIII or Section VIIIA.)

c. Remove the fairing and access panel from around the leading edge of the wing, located between the fuselage and engine nacelle.

d. At the fillet fairing on top of the wing, between the fuselage and wing, remove the rivets that attach the fairing to the wing.

e. Remove the access plates from the fairing located between the underside of the wing butt rib and fuselage, and the access plate to the spar splice located on the underside of the fuselage.

f. Within the fuselage, remove the fuel control panel and spar cover.

g. Remove the fore and aft floor panels adjacent to the main spar and, if removing the left wing, remove the left forward floor panel between the fuselage side trim panel and control pedestal.

NOTE

To help facilitate reinstallation of control cables and fuel or hydraulic lines, before removing mark cable and line ends in some identifying manner and attach a line where applicable to cables before drawing them through the fuselage or wing.

CAUTION

To prevent damage or contamination of fuel, hydraulic and miscellaneous lines, place a protective cover over the line fittings and ends.

h. If the left wing is being removed, the following items pertain to the removal of the left wing only:

1. Disconnect the primary control cables at the turnbuckles located at stations 100 and 110.50 between the left forward side trim panel and control pedestal. Drawing the cables back through the spar. Remove the elevator cable guard pin at station 121.38 to allow the cable ends to pass through.

2. Remove the left aileron cable guard pin at station 164.51.

3. The balance cable to the left wing may be disconnected at the aileron bellcrank, drawn through the wing and taped out of the way at the side of the fuselage. The cable guard pin at the left wing near the bellcrank and wing butt rib will have to be removed to allow the cable end to pass through.

i. If the right wing is being removed, the following items pertain to the removal of the right wing. only:

1. Disconnect the aileron control cable at the aileron bellcrank and draw it out through the wing. The cable guard in the wing near the bellcrank and wing butt will have to be removed to allow the cable end to pass through.

2. Disconnect the aileron balance cable at station 171 and draw the cable from the fuselage. Remove the cable pulley to allow removal of the cable.

3. Remove the access panels at the aft section of the fuselage. Block the elevator and rudder trim cables ahead of the main spar and in the aft section of the fuselage to prevent the cables from unwrapping at the trim drums. (Refer to Figure 4-2.) Disconnect the elevator and rudder trim cables at stations 308.75 and 287.50. Draw the cables forward through the main spar, to allow the cables to be drawn through the fuselage. Remove the cable guard pins from stations 243.25 and 262, also remove the rub blocks from stations 137, 162.60, 174 and 215.

4. Block the aileron trim cable at the side of the fuselage and within the wing to prevent the trim drum from unwrapping. Disconnect the trim cable turnbuckles at wing station 90 and draw the cables inboard through the wing. Remove the cable guard at the butt end of the wing and tape the cables out of the way at the fuselage.

5. Disconnect the hydraulic lines at stations 100 and 140.

6. Disconnect the bleed air and freon lines.

j. At station 174 disconnect the flap actuating cable from the actuating motor and bulkhead and draw the cable out through the fuselage.

k. Through the wing fairing access opening on the underside of the wing, disconnect the fuel line routed through the main spar and pull it back through the spar. Disconnect the hydraulic and fuel lines at the exposed fittings and control cables from the fuel valves.

l. Through the access openings at the wing leading edge and butt, disconnect the engine instruments vacuum fuel and hydraulic lines. Remove support blocks and clamps.

m. Disconnect electrical wire connectors.

n. Draw engine control cables back through the fire wall engine nacelle and wing.

o. Arrange a suitable fuselage cradle and supports for both wings.

p. Remove the fuel control panel cover, bracket, lever assembly, and unbolt and remove the angle support that extends through the spar.

q. To the side of the fuselage, at the top of the main spar, remove the fore and aft lower support fittings. The upper fitting may remain in place.

r. Also to the side of the fuselage, at the bottom of the main spar, remove the support bolt assembly and spacer bushing.

s. Unbolt and remove the vertical spar splice channels.

t. Unbolt and remove the upper and lower horizontal spar cap splice plates.

u. Remove the bolt assembly that attaches the front spar and fuselage fitting.

v. Remove the bolt assembly that attaches the rear spar and fuselage fitting.

w. Pull the wing directly and slowly away from the fuselage, allowing lines, cables, etc., to follow.

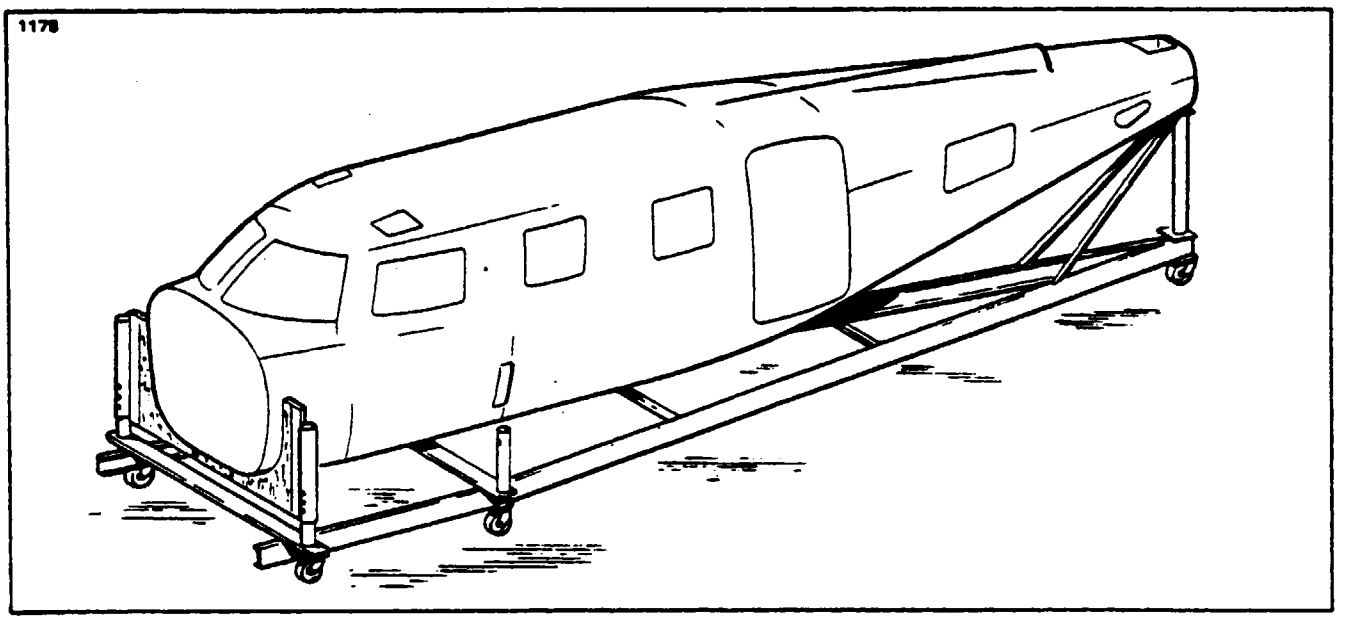

Figure 4-3. Fuselage Cradle (Typical)

4-20. INSTALLATION OF WING. (Refer to Figure 4-4.)

NOTE

Fuselage station reference points are provided in order to facilitate the location of various components in the PA-31T, PA-31T1, and PA-31T2. Subtract 24 inches for all stations points forward of fuselage station 135 for the PA-31T2, to find the proper location of various components in this aircraft.

a. Ascertain that the fuselage is positioned solidly on a support cradle.

b. Place the wing in position for installation with the spar end a few inches from the side of the fuselage and set on trestles. Turn out the three adjusting screws that draw the bottom fairing against the wing butt.

c. Prepare the various lines, control cables, pressurization ducts, etc., for inserting into the wing or fuselage when the wing is slid into place.

d. Slide the wing into the fuselage (it may be necessary to insert a metal strip between the fillet fairing and wing butt so as to funnel the wing between the upper and lower fairings).

e. Install the bolt that attaches the rear spar and fuselage fittings.

f. Install the bolt that attaches the front spar and fuselage fitting.

g. Install and bolt the fore and aft vertical spar splice channels.

h. Install and bolt the upper and lower horizontal spar cap splice plates.

i. To the side of the fuselage, at the top of the main spar, bolt the fore and aft lower support fitting to the upper support fitting and spar.

j. At the lower side of the main spar, install support bolt assembly and bushing.

k. Install the angle support that extends through the fuselage and the brace assembly at the forward side of the spar.

l. Tighten bolts of all attachment fittings, plates, etc. Refer to Figure 4-4.

m. Install the fuel control panel.

n. Draw engine control cables into place.

o. At the wing leading edge and butt, connect the engine instruments, fuel and hydraulic lines. Secure the lines and cables in position with support blocks and clamps.

p. Connect electrical wire connectors.

q. Through the wing fairing access openings at the underside of the fuselage, connect the fuel and hydraulic lines and fuel valves' control cables.

r. Draw the flexible drive shaft from the flap transmission into the fuselage and rig in accordance with Rigging and Adjustment of Flap Controls in Section V.

s. Connect the bleed air pressurization and deicer lines.

t. The following items pertain to the installation of the right wing only along with previous instructions:

1. Connect the freon lines that run through the leading edge. Evacuate and charge the air conditioning system. (Refer to Section XIII.)

2. Connect the hydraulic lines at stations 140 and 100.

3. Draw the aileron trim cables into the wing; connect turnbuckles and unblock cables. Install cable guard pin at butt end of wing. Check rigging and adjustment, cable tension and safety turnbuckles. (Refer to Rigging and Adjustment of Aileron Trim, Section V.)

4. Draw the elevator and rudder trim cables back through the fuselage; connect turnbuckles in the aft section of the fuselage and unblock cables. Install cable guard pins at stations 243.25 and 262, also close and secure rub blocks at stations 137, 162.60, 174 and 215. Check rigging and adjustment. (Refer to Rigging and Adjustment of Elevator and Rudder Trim, Section V.)

5. Draw aileron balance cable into the fuselage and connect to the left balance cable at station 171. Install cable pulley and secure.

6. Draw the aileron control cable into the wing and connect at the aileron bellcrank. Install cable guard pin at the pulley near the bellcrank and at the wing butt. Check rigging and adjustment, cable tension and safety turnbuckles. (Refer to Rigging and Adjustment of Aileron, Section V.)

u. If the left wing is being installed, the following items pertain to the installation of the left wing only along with the instructions given in Steps a thru s:

1. Draw the left balance cable into the wing and connect at the aileron bellcrank. Install the cable guard pin at the cable pulley near the bellcrank and at the wing butt.

2. Draw the primary control cables through the main spar and connect turnbuckles at stations 100 and 110.50. Install the cable guard pins for the left aileron cable at station 164.51 and the elevator cables at station 121.38. Check rigging and adjustment, cable tension and safety turnbuckles. (Refer to Rigging and Adjustment of Aileron, Elevator and Rudder, Section V.)

v. Install engine (Refer to Installation of Engine, Section VIII or Section VIIIA.)

w. Check hydraulic fluid level (refer to Section II or VI) and with the airplane setting on jacks, operate the gear through several retraction and extension cycles to ascertain that there are no hydraulic fluid leaks.

x. Check brake fluid level, bleed brakes (refer to Bleeding Brakes, Section VII) and ascertain that there are no fluid leaks.

y. Check fuel system for leaks and flow.

z. At the top of the wing, rivet the fillet fairing to the wing and fuselage. Apply a bead of Minnesota Mining and Manufacturing Sealant EC750, or equivalent, along the edge of the wing root fillet at the fuselage and wing skins starting at the leading edge and extending aft over the top of the trailing edge.

aa. At the fairing between the underside of the fuselage and wing, turn the three adjusting screws that draw the fairing against the underside of the wing butt and ascertain that there is a rub strip between the wing and fairing.

ab. Install spar cover, floor panels and fuel control panel.

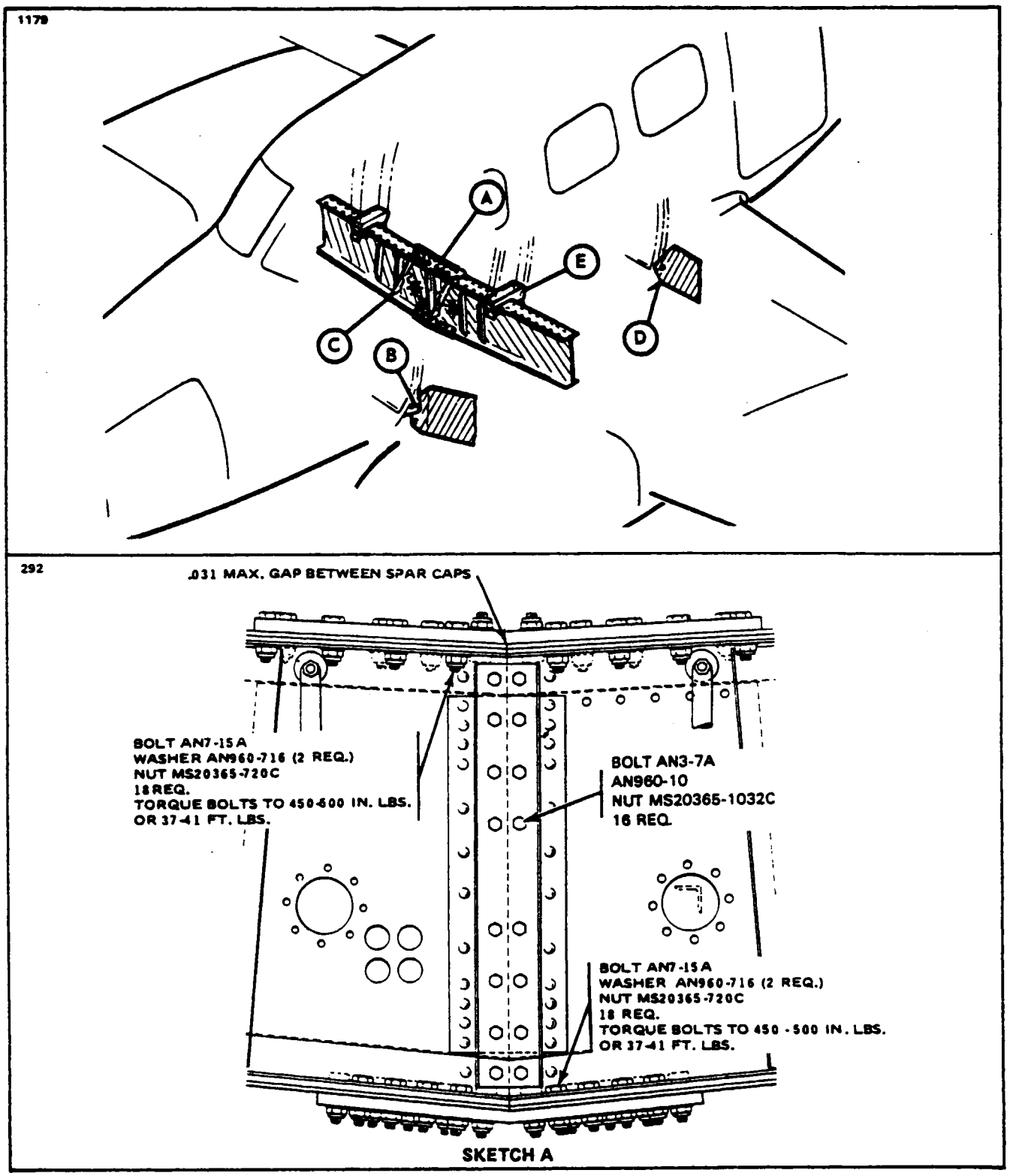

Figure 4-4. Wing Installation

1024

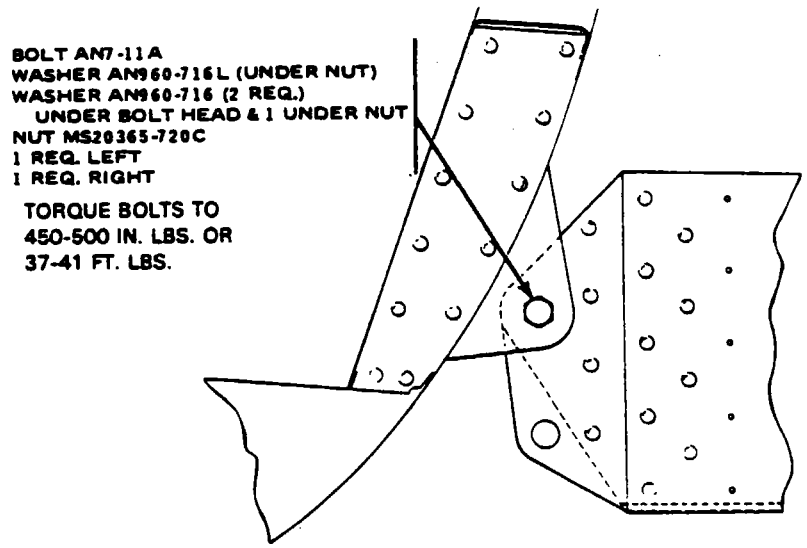

SKETCH B

1025

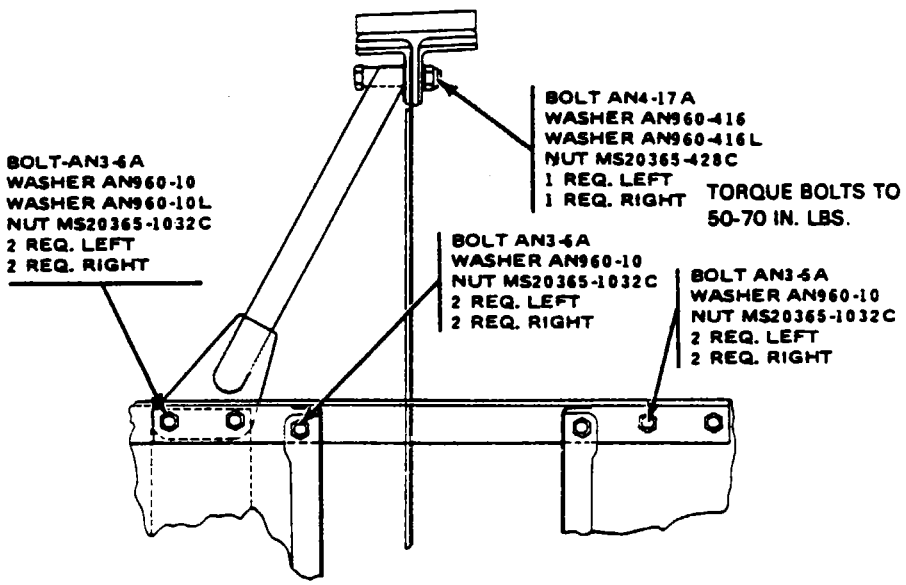

SKETCH C

Figure 4-4. Wing Installation (cont.)

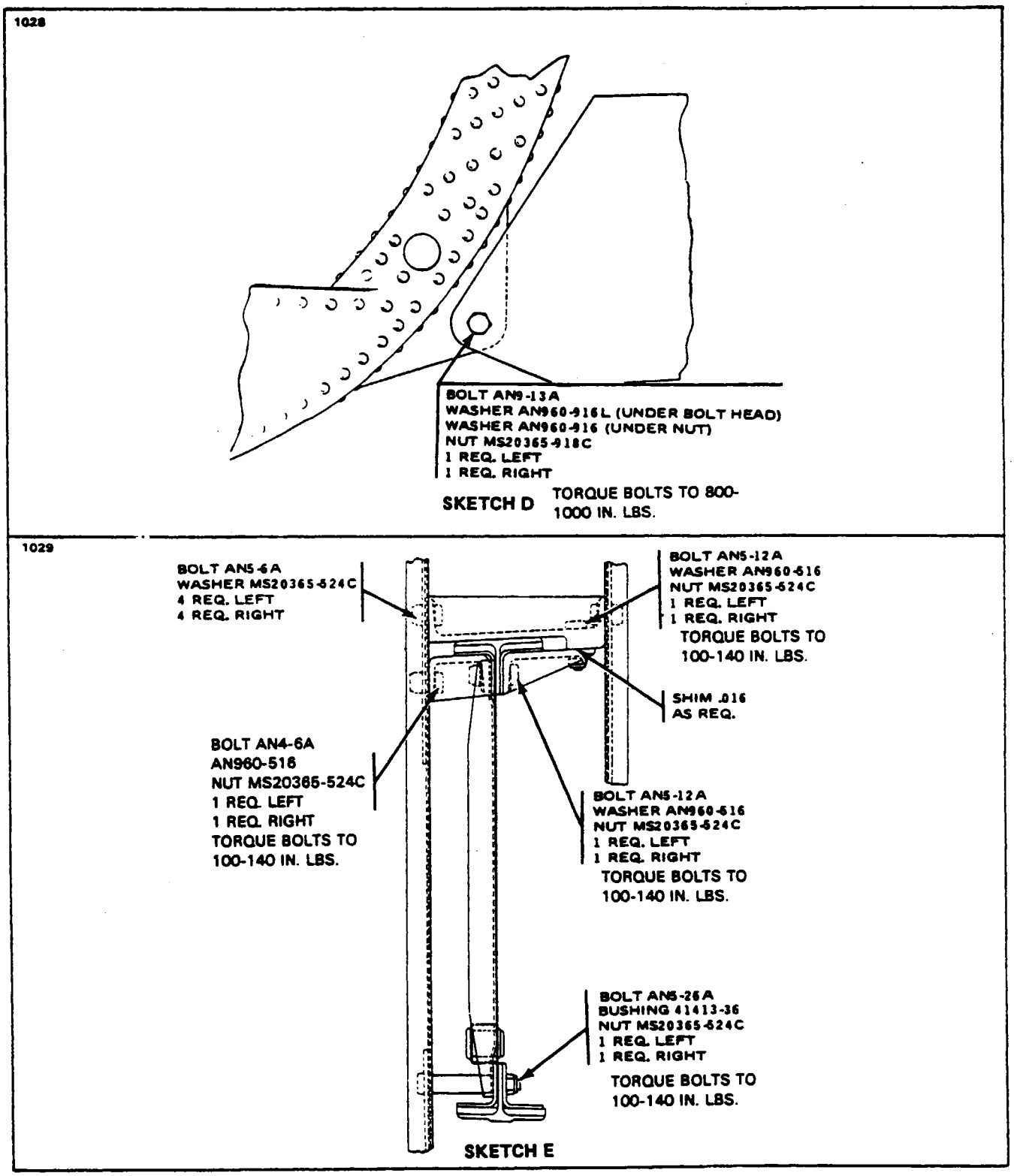

Figure 4-4. Wing Installation (cont.)

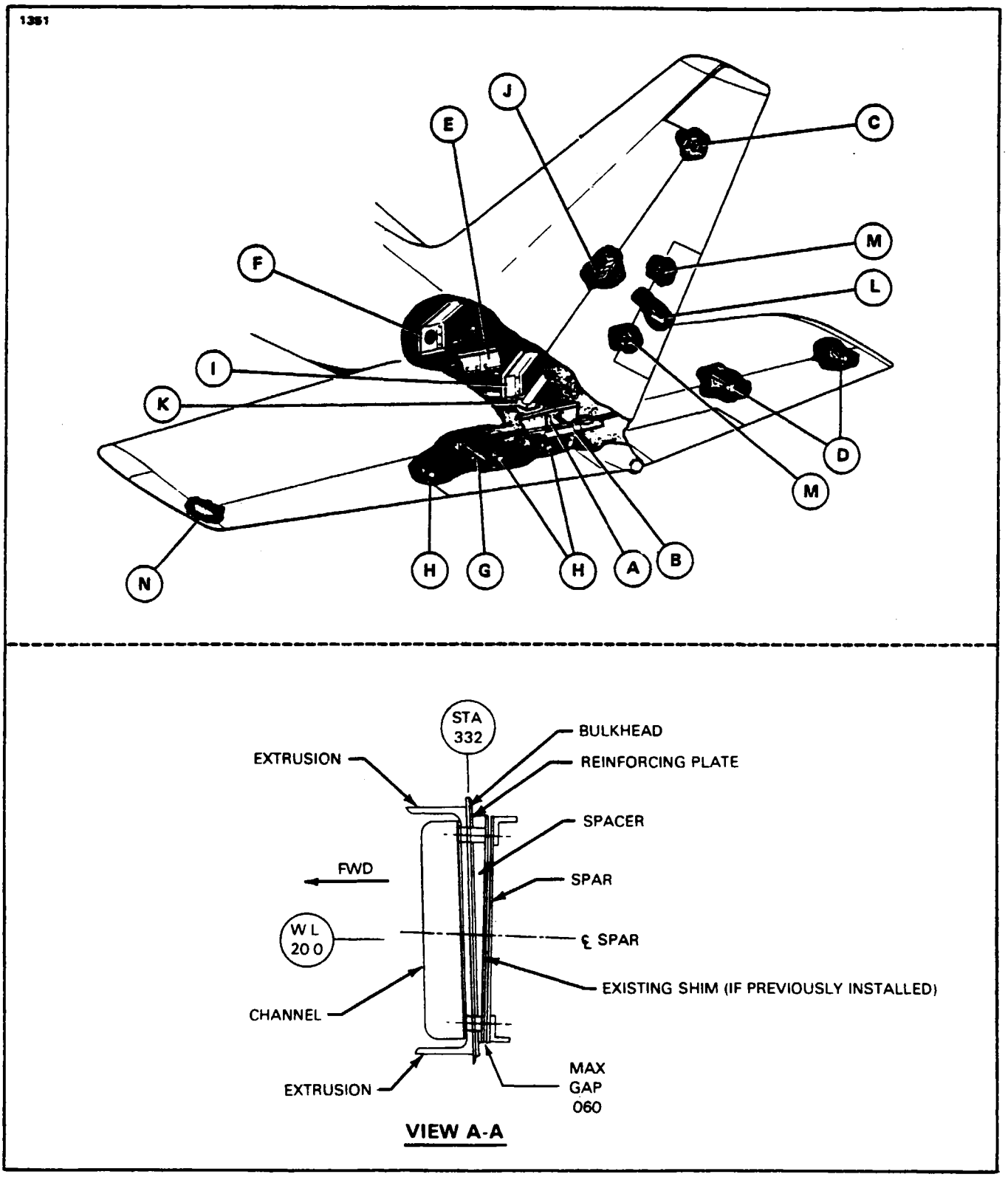

Figure 4-5. Empennage Installation

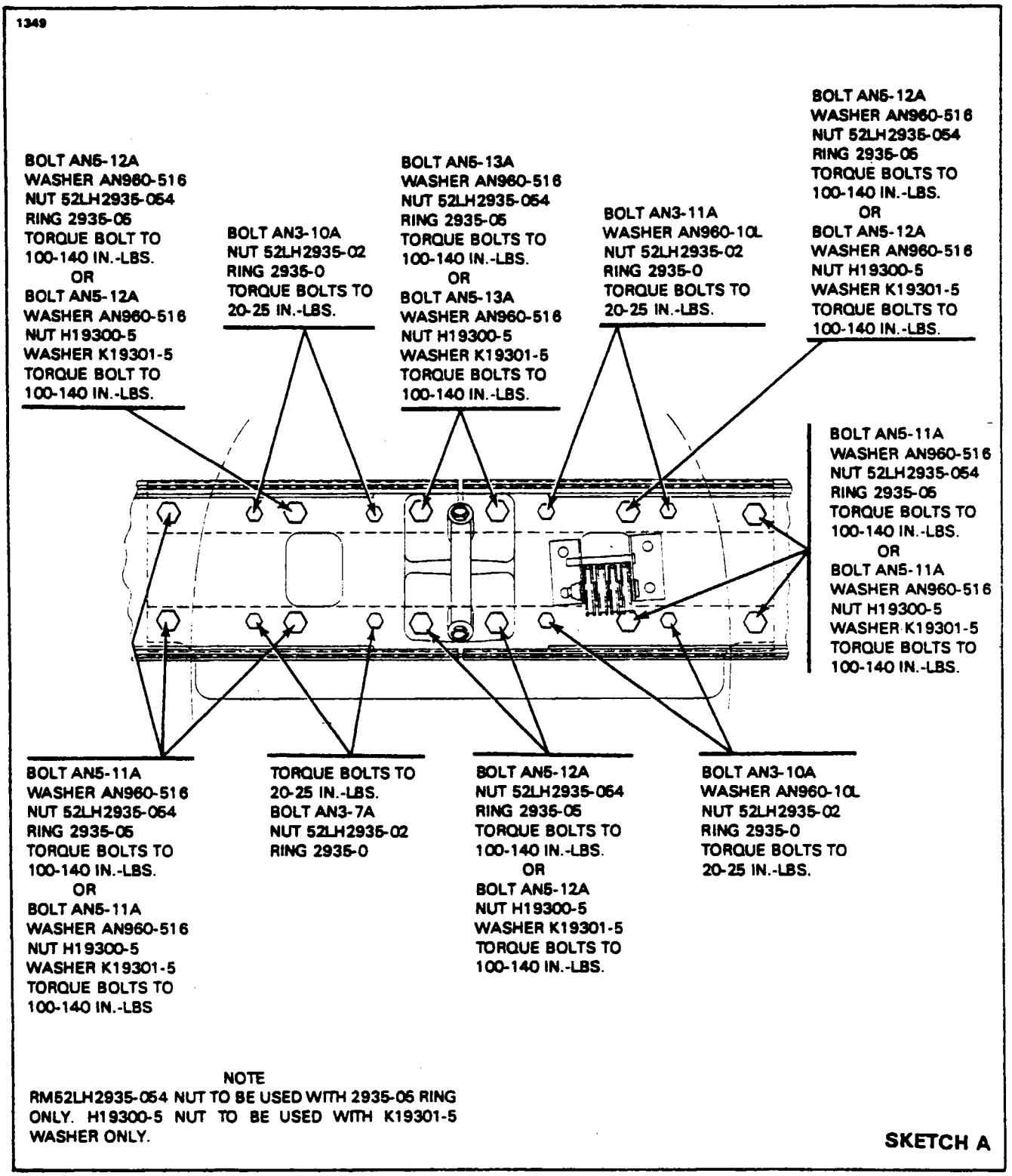

Figure 4-5. Empennage Installation (cont.)

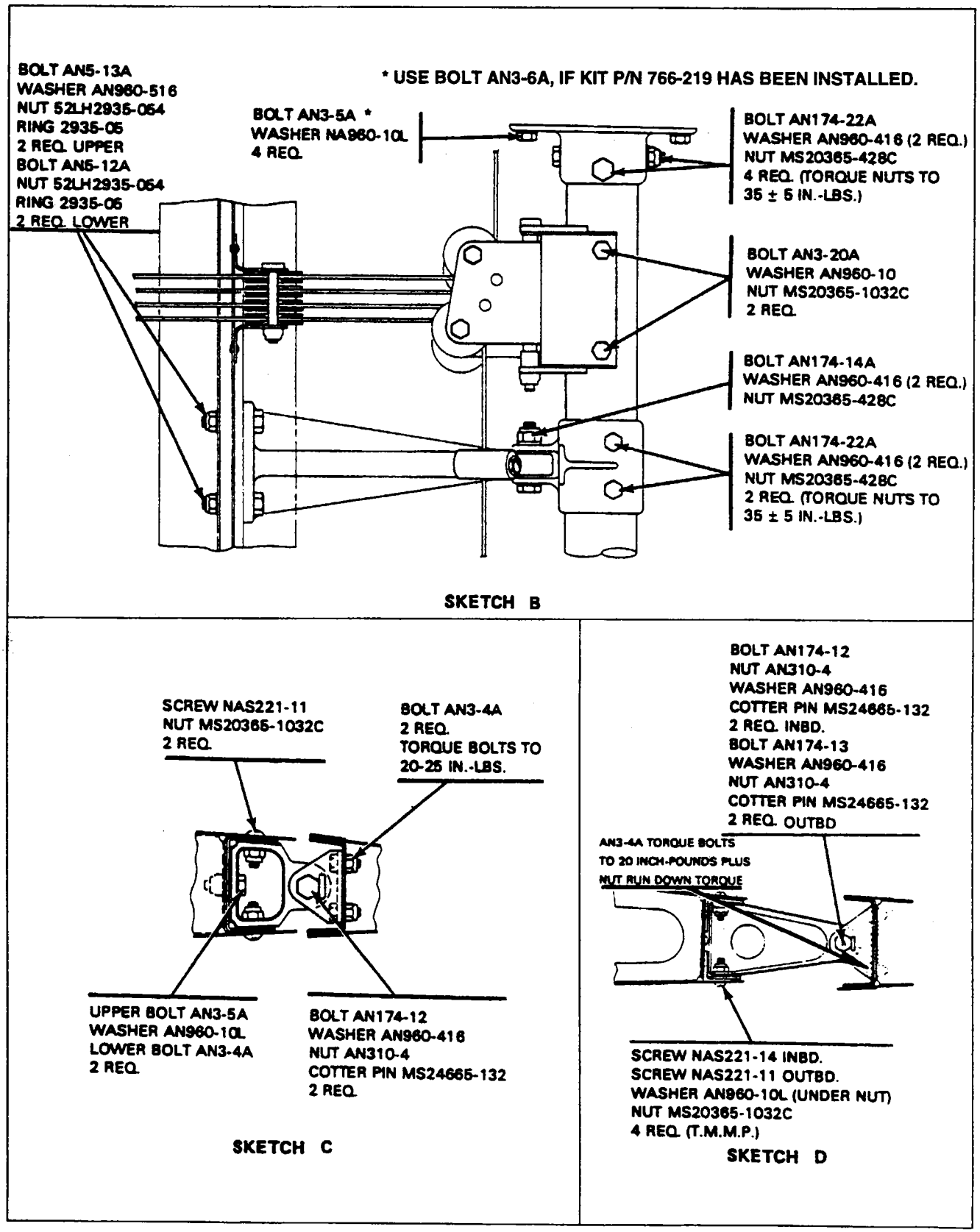

Figure 4-5. Empennage Installation (cont.)

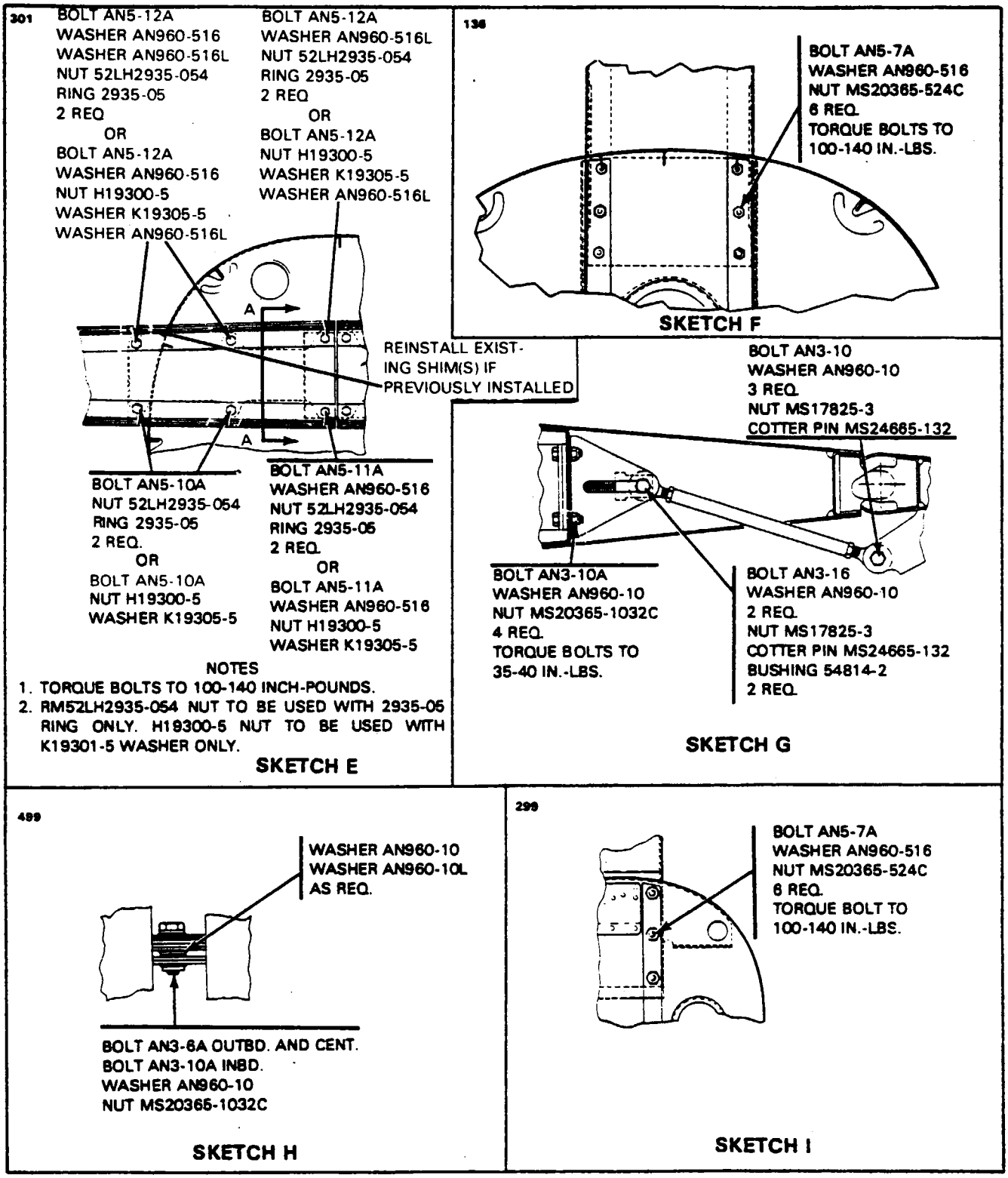

Figure 4-5. Empennage Installation (cont.)

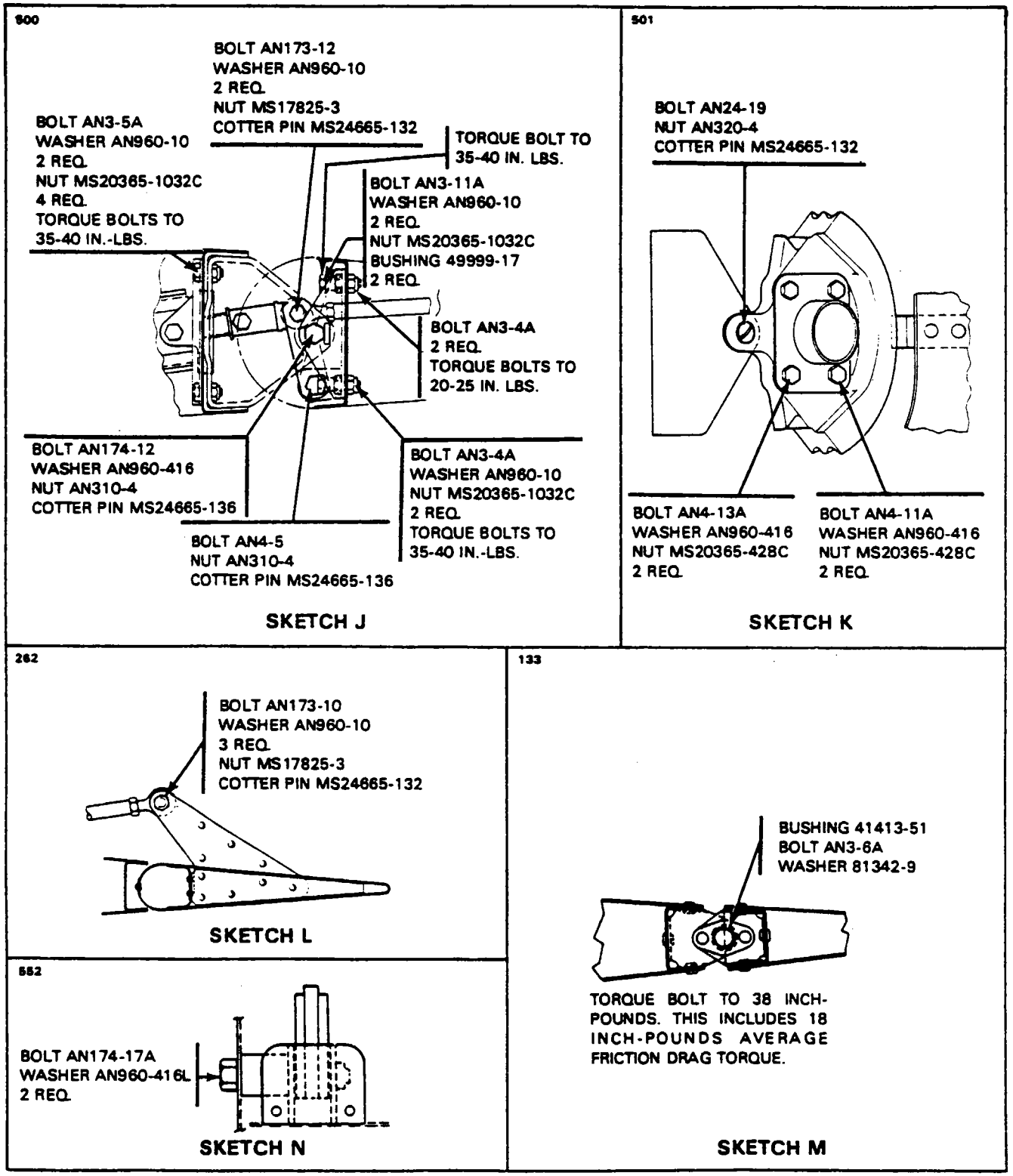

Figure 4-5. Empennage Installation (cont.)

4-21. EMPENNAGE GROUP

4-22. ELEVATOR

NOTE

Any time service is accomplished on the elevator control system a friction check must be made to insure friction is within limits (Refer to Paragraph 4-95)

CAUTION

Exercise care that the elevator control tube does not incur nicks dents or deep scratches during installation, removal or rigging operations. Visually reinspect the elevator control tube each time it is removed or reinstalled. (See latest revision Piper Service Bulletin No. 715.)

4-23. REMOVAL OF ELEVATOR. (Refer to Figure 4-5.)

a. Remove the screws that attach the fuselage tail cone. pull the cone back far enough to disconnect the navigation light wires and then remove the tail cone.
b. At the right and left elevator disconnect the trim tab control rods.
c. Block and disconnect trim cables.
d Remove the bolts that attach the elevator, torque tube bracket to the elevator.
e. Remove hinge bolts and remove elevator.
f. To remove the elevator torque tube assembly after the elevators have been removed, disconnect the elevator push-pull rod at the control arm.
g. Remove the hinge bolt and separate the torque tube assembly from its mating hinge bracket.

4-23a. ELEVATOR BUTT RIB INSPECTION. (See latest revision of Piper Service Bulletin No. 897.)

a. Verify Elevator Butt Rib Refinement Kit, Piper Part Number 766-219, has been installed in accordance with Piper Service Bulletin No. 897B.
b. Each 100 hours, inspect the false spar channels, elevator butt ribs, and the elevator spar at the butt rib attachment with a 10X magnifier for cracks in the bolt and rivet holes or flanges. Elevator removal is not required.
c. Each time the elevator is removed, inspect the false spar channels, elevator butt ribs, and the elevator spar at the butt rib attachment with a 10X magnifier for cracks in the bolt and rivet holes or flanges.

4-24. INSTALLATION OF ELEVATOR (Refer to Figure 4-5.)

a. Place the elevator torque tube assembly in position with its mating hinge bracket.
b. Install hinge bolt assembly torque and safety.
c. The elevator push-pull rod may be installed and connected to the arm of the torque tube assembly.
d. Place the elevator in position; install hinge bolt assemblies and torque.
e. Install proper length bolts attaching the torque tube bracket and elevator. Ascertain that the elevator halves align and tighten bolts.
f. Connect the elevator trim tab cables and control rods to the right and left elevators and secure in position. Torque bolts.
g. Check elevator for proper operation and friction limits.
h. Connect the navigation lights, wires, and place the tail cone assembly in position. Start all screws with washers and then tighten.

4-25. ELEVATOR TRIM TAB

CAUTION

Exercise care that the elevator control tube does not incur nicks, dents or deep scratches during installation, removal or rigging operations. Visually reinspect the elevator control tube each time it is removed or reinstalled. (See latest revision Piper Service Bulletin No. 715.)

4-26. REMOVAL OF ELEVATOR TRIM TAB. (Refer to Figure 4-5.)

a. Disconnect the control rods at the tabs.

b. Remove the hinge bolts securing the tabs.

4-27. INSTALLATION OF ELEVATOR TRIM TAB. (Refer to Figure 4-5.)

a. Place the trim tabs in position and install bolts.

b. Position the tab control rods; install the attaching bolts and torque.

4-28. HORIZONTAL STABILIZER.

4-29. REMOVAL OF HORIZONTAL STABILIZER. (Refer to Figure 4-5.)

a. Remove the left and/or right elevator in accordance with instructions given in this section.

b. Remove the access plates located on each side of the fuselage under the horizontal stabilizers and the panel located on top of the fuselage aft of the vertical fin.

c. To remove the right stabilizer, locate the elevator trim cable turnbuckles in the aft section of the fuselage; mark the ends of one turnbuckle to facilitate reinstallation, and block the cables at one of the fuselage bulkheads and in the stabilizer to prevent the trim cables from unwinding. (Refer to Figure 4-2.)

d. Disconnect the trim cables at the turnbuckles.

e. Through the access hole, remove the two elevator trim cable pulleys, spacer and bolt. Draw the cables through the fuselage to this point.

f. Disconnect the elevator trim tab control tubes and deicer lines, if installed.

g. Remove the mounting bolts that attach the front spar to the fuselage bulkhead.

h. Remove the mounting bolts that attach the elevator torque tube hinge bracket and rear spar.

i. Pull the stabilizer directly away from the fuselage.

j. Remove and retain all shims (if any), which were installed between the horizontal stabilizer front spar and the tapered spacers on the bulkhead at fuselage station 332.

4-30. INSTALLATION OF HORIZONTAL STABILIZER. (Refer to Figure 4-5.)

a. Trial fit to ascertain gap between stabilizer and fuselage skin surface is 0.19 inch. Trim to obtain this gap.

b. Ascertain that the sealer extrusion is attached to the inboard side of the elevator.

c. Put the stabilizer in position and align the front and rear spar mounting holes. If installing a right elevator, guide the elevator trim cables into the fuselage.

NOTE

Insure that all existing shims (if any) or new shims (if required), have been reinstalled between the horizontal stabilizer forward spar and the tapered spacers on the bulkhead at fuselage station 332.

d. Position the elevator torque tube hinge bracket and install the rear spar mounting bolts.

e. Install the front spar mounting bolts.

f. Tighten all mounting bolts.

g. If the right stabilizer was removed, enter through the top access hole and route the trim tab control cables forward and install cable pulleys.

h. Connect the trim cable ends and set cable tension. (Refer to Section V.)

i. Install the elevator(s) in accordance with instructions given in this section.

j. Check elevator trim and elevator operation. (See Section V for the rigging and adjustment of elevator and elevator trim controls.)

k. Install all access plates and panels.

4-31. RUDDER.

4-32. REMOVAL OF RUDDER. (Refer to Figure 4-5.)

a. Relieve cable tension from the control system by removing the floor panel to the left of the control pedestal and loosen one of the rudder cable turnbuckles.

b. Remove the access panel located on top of the fuselage, aft of the vertical fin.

c. With the control cable tension relieved, disconnect the control cable from the rudder sector.

d. Disconnect the rudder trim control rod at fin and tape to rudder with tab in neutral position.

e. Swing the rudder and remove the hinge bolts.

f. Pull the rudder back and up removing the unit.

4-33. INSTALLATION OF RUDDER. (Refer to Figure 4-5.)

a. Put the rudder in position; install and torque the hinge bolts.

b. Position the rudder trim control rod; install bolt and torque.

c. Connect the rudder control cables to the rudder sector.

d. Adjust the control cable turnbuckle previously loosened to obtain proper cable tension as given in Section V, with the rudder and control wheels centered.

e. Check rudder for proper operation.

f. Install fuselage and cabin access panels.

4-34. RUDDER TRIM TAB.

4-35. REMOVAL OF RUDDER TRIM TAB. (Refer to Figure 4-5.)

a. Disconnect the control rod at the tab.

b. Remove the hinge bolts securing the tab.

4-36. INSTALLATION OF RUDDER TRIM TAB. (Refer to Figure 4-5.)

a. Place the trim tab in position, install bolts and bushings and torque to 38 inch pounds, this includes 18 inch pounds average friction drag torque.

b. Connect trim tab control rod.

4-37. VERTICAL STABILIZER (FIN).

4-38. REMOVAL OF VERTICAL STABILIZER (FIN). (Refer to Figure 4-5.)

a. Remove the fairing around the front of the fin which is a portion of the dorsal fin.

b. Disconnect the radio antenna cable and deicer line, if installed.

c. Disconnect the antenna wire from the top of the stabilizer if high frequency radio is installed.

d. Remove the access plates located on each side of the fuselage, under the horizontal stabilizer and the panel located on top of the fuselage, aft of the vertical fin. The tail cone may be removed, if desired.

e. Remove the rudder in accordance with instructions given in this section.

f. Locate the rudder trim cable turnbuckles in the aft section of the fuselage; mark the ends of one turnbuckle to facilitate reinstallation and block the cables in the aft section of the fuselage and in the rudder to prevent the cable from unwinding. (Refer to Figure 4-2.)

g. Disconnect the trim cables.

h. Through the right fuselage access holes, remove the two sets of trim cable pulleys, spacers and bolts.

i. Remove the mounting bolts that attach the front spar to the fuselage bulkhead.

j. Remove the mounting bolts that attach the rear spar to the fuselage bulkhead.

k. Pull the stabilizer directly up from the fuselage.

4-39. INSTALLATION OF VERTICAL STABILIZER (FIN). (Refer to Figure 4-5.)

a. Trial fit to ascertain gap between stabilizer and fuselage skin is 0.19 inch. Trim to obtain this gap.
b. Ascertain that the sealer extrusion is attached to the lower side of the vertical stabilizer.
c. Put the stabilizer in position and align the front and rear spar mounting holes.
d. Position the lower rudder hinge bracket and install the rear spar mounting bolts.
e. Install the front spar mounting bolts.
f. Torque all mounting bolts.
g. Route the rudder trim cable forward and install the two sets of cable pulleys.
h. Connect the trim cable ends; remove cable blocks and set cable tension. (Refer to Section V.)
i. Install the rudder in accordance with instructions given in this section.
j. Check rudder trim and rudder operation. (See Section V for the Rigging and Adjustment of Rudder and Rudder Trim Controls.)
k. Install all access plates and panels.

4-40. WINDSHIELD.

4-41. REMOVAL OF WINDSHIELD. (Refer to Figures 4-6 and 4-7.)

a. Remove the windshield wiper blade and arm from the airplane by removing the safety wire from the bolt holding the arm to the wiper motor and the cotter pin from the pivot bolt. (Refer to Paragraph 4-47.)
b. Remove the magnetic compass from the inside center post of the windshield.
c. Remove the cover panel on top of the instrument panel.
d. Remove the inside windshield molding and disconnect electrical leads on heated windshield.
e. Remove the existing sealant from around the locknuts on the windshield.
f. Remove the machine screws from around the collar moldings. This will require the assistance of another person.

NOTE

The machine screws which hold the windshield in position are installed in a particular order of sizes, and when removed, a note of their location should be made to insure the proper installation of the various sizes.

g. Remove the collar molding and the windshield.
h. With the windshield removed, the eyebrow bulkhead should be cleaned to remove all traces of old sealant before reinstalling the windshield.

4-42. INSTALLATION OF WINDSHIELD. (Refer to Figures 4-6 and 4-7.)

a. Perform the surface preparation in accordance with instructions given in Paragraph 4-102.

NOTE

Mask the windshield optical surface and fuselage skins around the windshield collar area to minimize cleanup.

b. Apply one inch wide, 1/16 inch thick vinyl foam tape (Norton Co., Tape No. V542, Piper No. 924 441) to the outer surface of the windshield, even with the edge and covering the holes.
c. Position the windshield into the eyebrow bulkhead from the outside.
d. Apply a bead of sealant to the frame on each side of the outer collar attachment holes.
e. Seal between the left and right windshields.
f. Position the collar over the windshield and install the machine screws, being certain to install the screws in the same location that they were removed from. Refer to Figures 4-6 and 4-7 for proper screw type and location.

g. Install the washers and locknuts on the machine screws and torque to 15-20 inch pounds.
h. Apply a bead of sealant around the inner collar chamfer and windshield. Remove excess sealant with appropriate sealant removal tool noted in Figure 4-28.
i. Connect the electrical leads from the heated windshield.
j. Install the inside windshield molding and the top cover over the instrument panel.
k. Install the magnetic compass to the windshield center post.
l. Install the windshield wiper arm assembly and secure with the bolt previously removed and safety the bolt. Also install the cotter pin in the pivot bolt.

NOTE

The cabin should not be pressurized for at least 48 hours, to insure adequate time for the sealant to cure around the windshield.

4-42a. WINDSHIELD INSPECTION. See Appendix, Window Inspection and Repair — Standard Practices; Aerofiche Card 6 - Grid 6H1.

4-43. HEATED WINDSHIELD CHECK. The following steps will help in determining if the windshield heating element and timer are functioning properly.

CAUTION

To prevent overheat, and possible damage to windshield, DO NOT leave windshield heat ON longer than necessary to perform the following checks:

a. Connect a 24-volt test light to the positive and negative terminals of the windshield.
b. Set the switch marked WINDSHIELD HEAT to the ON position. The test light should light indicating current is being delivered to the windshield.
c. Place your hand against the windshield to determine that the windshield heating element is operating.
d. The test light should go out before the windshield becomes too hot to hold your hand against it. This indicates that the temperature sensing element is operating properly and has passed through its thermostatic ON-OFF cycle.
e. When check is completed, set the WINDSHIELD HEAT to the OFF position and remove the test light.

4-44. WINDSHIELD WIPER MECHANISM.

4-45. REMOVAL OF WIPER MECHANISM. (Refer to Figures 4-8 and 4-8a.)

a. Remove the access panel on the left side of the nose section. If the copilots wiper is installed, remove the access panel on the right side of the nose section also.
b. Cut the lockwire (5) at the bolt which secures the arm (3) to the serrated converter shaft and remove the bolt.
c. Loosen the adjustment nut (4) and lift the wiper arm (3) off the converter shaft. Refer to Paragraphs 4-48 and 4-49 for wiper blade replacement and adjustment.
d. Remove two screws from seal cover around converter shaft and remove cover and old sealant from shaft.

CAUTION

When separating the motor from the converter, do not lose the coupling (11) between the motor shaft (9) and converter drive shaft (12).

4-46. INSTALLATION OF WIPER MECHANISM. (Refer to Figures 4-8 and 4-8a.)

a. The wiper motor and the converter must be timed before connecting the two units together and installing them in the airplane. The timing can be accomplished as follows:

1. Rotate the drive shaft (12) in the converter (7) until the end of travel, corresponding to the park position, is obtained at the serrated converter shaft.

2. Temporarily connect the electrical connector to the wiper motor (8) and operate the motor, ending with the switch in the PARK position. Disconnect the electrical connector.

b. Assemble the wiper motor and converter by screwing the two units together.

NOTE

Ascertain that the coupling (11) is installed when connecting the motor and converter.

c. Assemble the units slowly until the coupler engages the converter drive shaft (12). The alignment should be automatic, but if severe binding occurs, back off and reassemble.

d. Screw units together until the nipple (10) bottoms in the converter or flexible drive assembly (16) engages the converter shaft and then back off for alignment of mounting brackets (13) and (14).

e. Install the assembled units into the airplane and secure with four screws. Do not install the seal cover at this time.

f. Apply a bead of sealer around the converter shaft where it extends through the fuselage. Position and secure the seal cover in place with two remaining screws.

NOTE

If a windshield wiper is installed on the copilot's side, the converter must be timed as stated in Step "a" with the blade parked at the center post, and the flexible drive shaft and coupling installed and safetied between both converters. Also, seal the converter shaft.

g. Connect the electrical connector to the wiper motor and replace the access panels removed.

h. Refer to Paragraphs 4-48 and 4-49 for wiper blade and arm installation and adjustment.

4-47. WIPER BLADE AND ARM REMOVAL.

a. Cut the lockwire at the bolt which secures the arm to the serrated converter shaft and remove the bolt.

b. Loosen the adjustment nut to relieve the arm tension and remove the wiper arm from the converter shaft.

c. Cut the lockwire (15) and pull the lock on the wiper blade out to remove the blade from the arm assembly.

45339

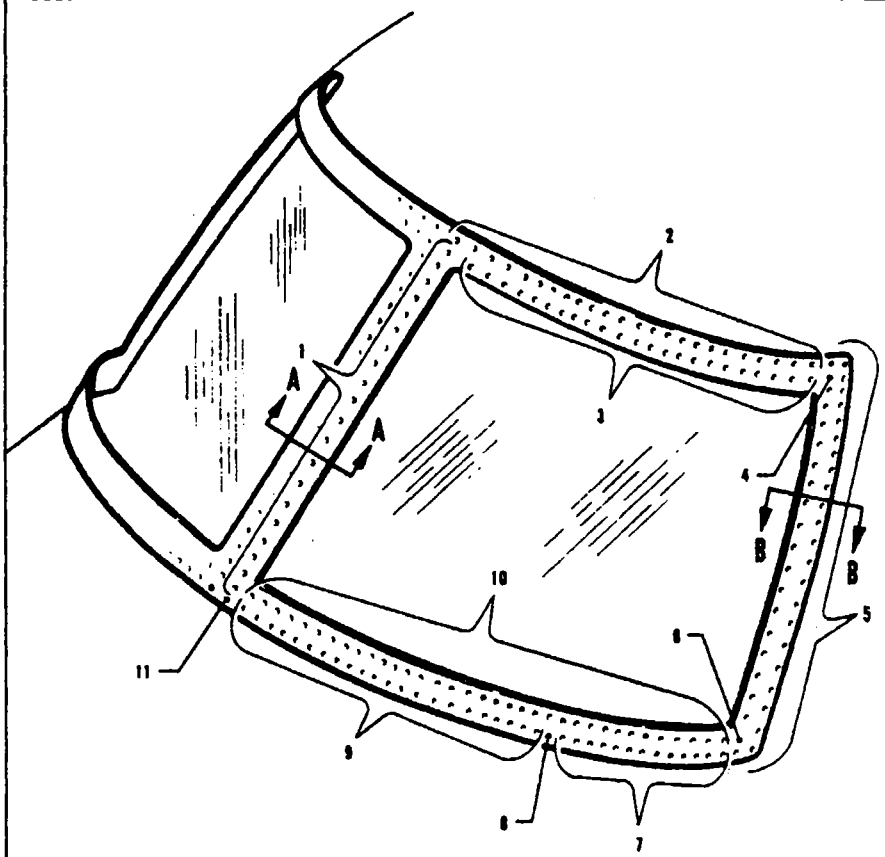

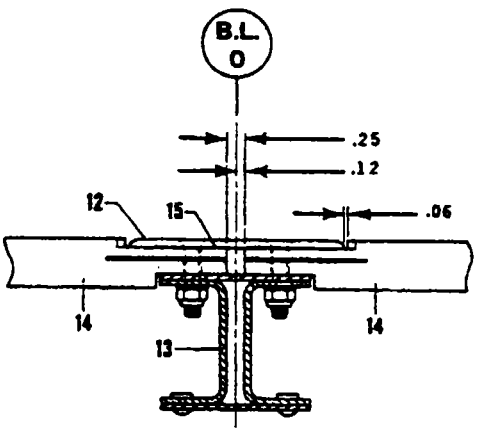

SECTION A - A

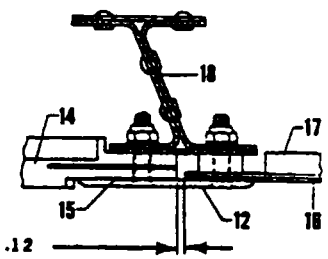

SECTION B - B

1. MS24694-S13 (20 REQ.) LEFT
   (20 REQ.) RIGHT
2. MS24694-S5 (24 REQ.) LEFT
   (24 REQ.) RIGHT
3. MS24694-S11 (23 REQ.) LEFT
   (23 REQ.) RIGHT
4. MS24694-S13 (1 REQ.) LEFT
   (1 REQ.) RIGHT
5. MS24694-S12 (41 REQ.) LEFT
   (41 REQ.) RIGHT
6. MS24694-S13 (1 REQ.) LEFT
   (1 REQ.) RIGHT
7. MS24694-S5 (13 REQ.) LEFT
   (13 REQ.) RIGHT
8. MS24694-S6 (1 REQ.) LEFT
   (1 REQ.) RIGHT
9. MS24694-S5 (22 REQ.) LEFT
   (22 REQ.) RIGHT
10. MS24694-S11 (35 REQ.) LEFT
    (35 REQ.) RIGHT
11. MS24694-S6 (1 REQ.) LEFT
    (1 REQ.) RIGHT
12. WINDSHIELD COLLAR
13. WINDSHIELD CHANNEL
14. WINDSHIELD
15. VINYL FOAM TAPE
16. SKIN
17. WINDOW
18. BULKHEAD

Figure 4-6. Windshield Installation (Earlier Models)

49622

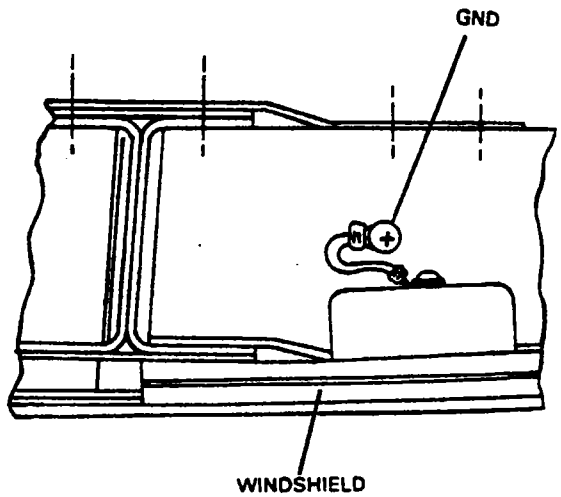

VIEW B-B. HEATED CO-PILOT'S WINDSHIELD WIRE TERMINAL

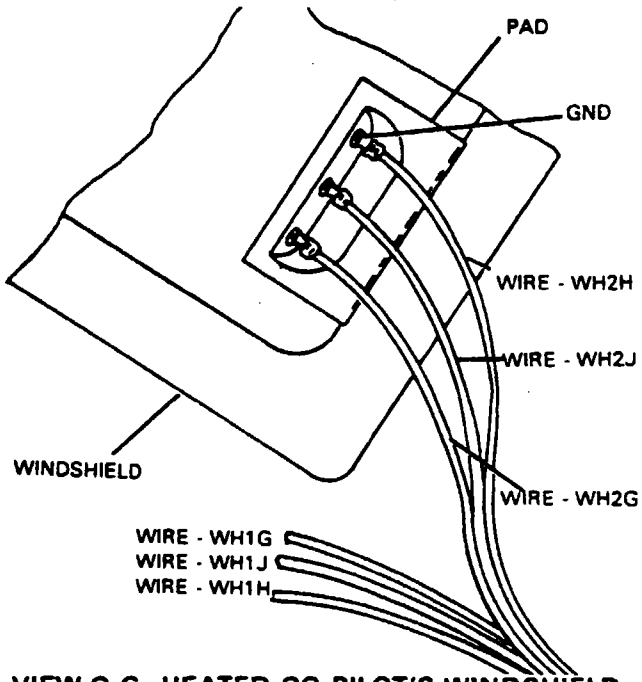

VIEW C-C. HEATED CO-PILOT'S WINDSHIELD WIRE TERMINAL

51169

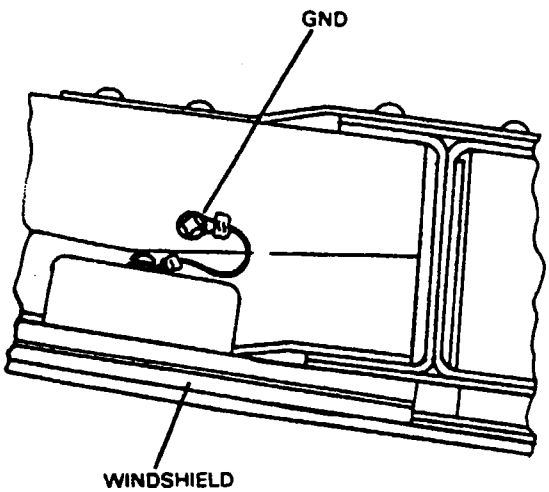

VIEW B-B. HEATED PILOT'S WINDSHIELD WIRE TERMINAL

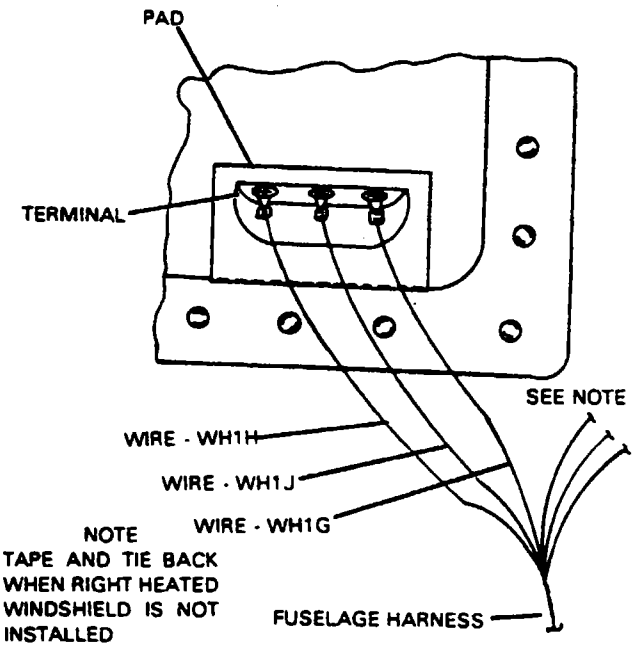

VIEW C-C. HEATED PILOT'S WINDSHIELD WIRE TERMINAL

Figure 4-6a. Heated Windshield (Earlier Models)

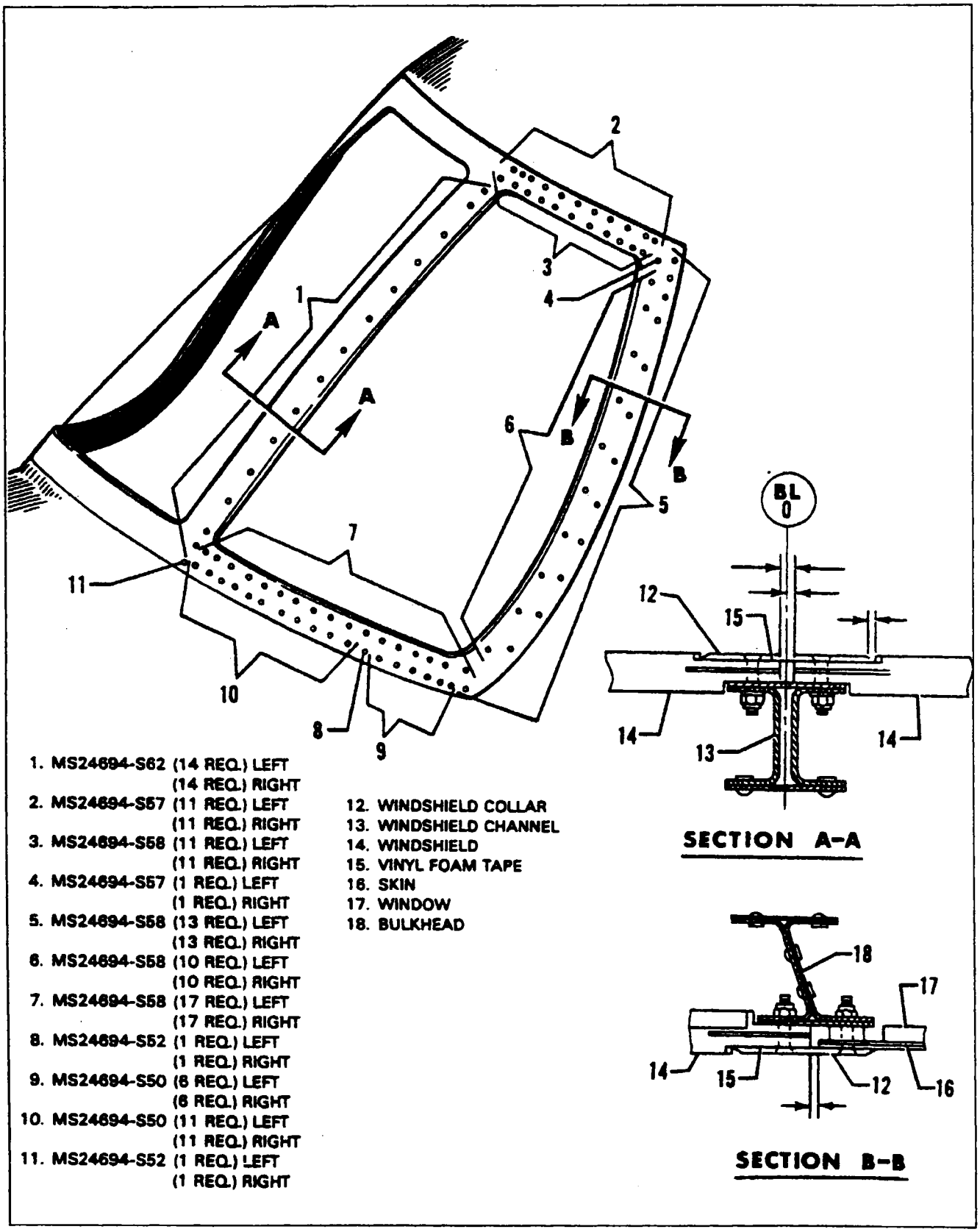

Figure 4-7. Windshield Installation (Later Models)

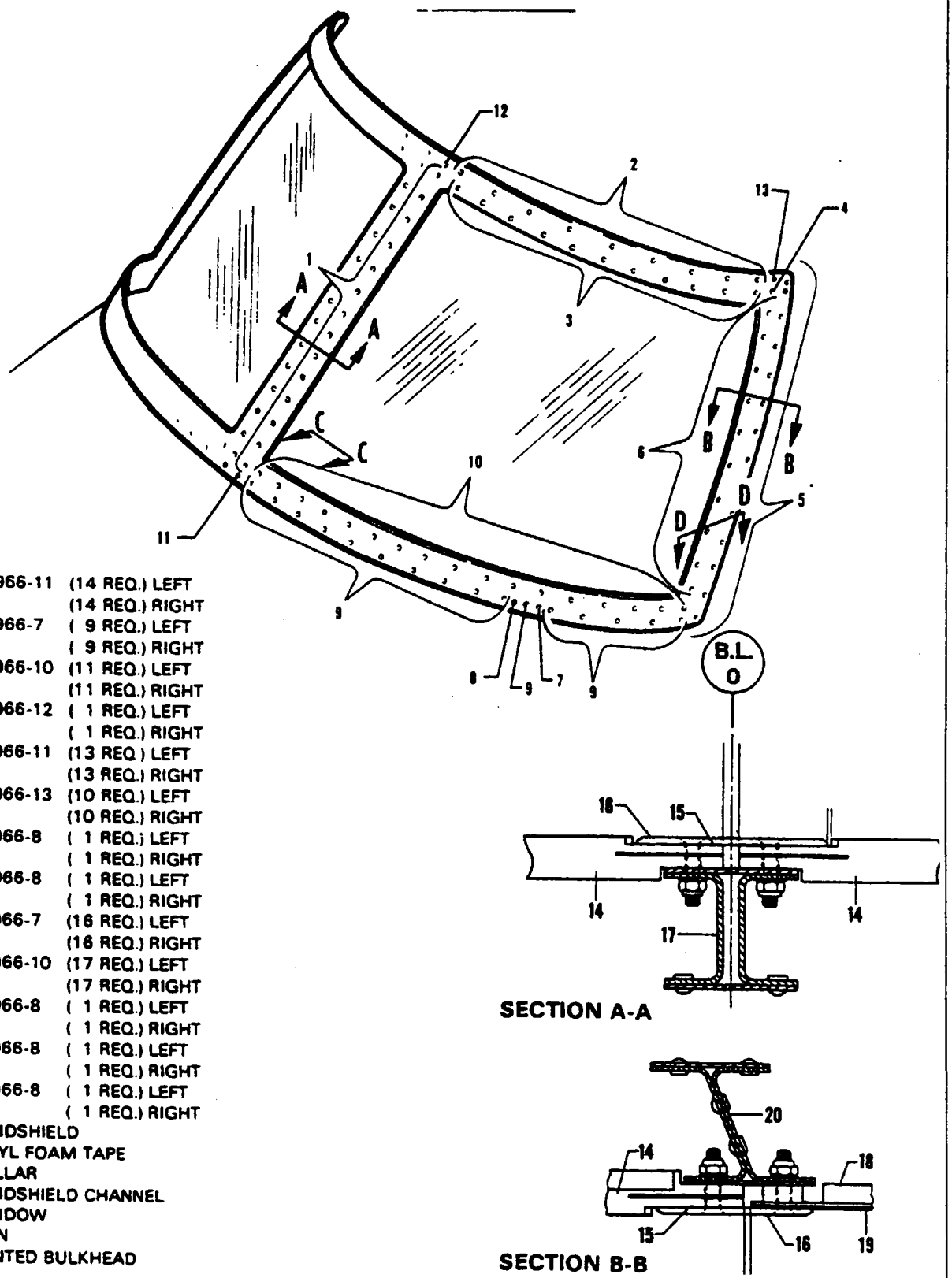

1 48966-11 (14 REQ.) LEFT
(14 REQ.) RIGHT
2. 48966-7 (9 REQ.) LEFT
(9 REQ.) RIGHT
3. 48966-10 (11 REQ.) LEFT
(11 REQ.) RIGHT
4 48966-12 (1 REQ.) LEFT
(1 REQ.) RIGHT
5 48966-11 (13 REQ.) LEFT
(13 REQ.) RIGHT
6. 48966-13 (10 REQ.) LEFT
(10 REQ.) RIGHT
7. 48966-8 (1 REQ.) LEFT
(1 REQ.) RIGHT
8 48966-8 (1 REQ.) LEFT
(1 REQ.) RIGHT
9 48966-7 (16 REQ.) LEFT
(16 REQ.) RIGHT
10. 48966-10 (17 REQ.) LEFT
(17 REQ.) RIGHT
11. 48966-8 (1 REQ.) LEFT
(1 REQ.) RIGHT
12 48966-8 (1 REQ.) LEFT
(1 REQ.) RIGHT
13. 48966-8 (1 REQ.) LEFT
(1 REQ.) RIGHT
14. WINDSHIELD
15. VINYL FOAM TAPE
16. COLLAR
17 WINDSHIELD CHANNEL
18. WINDOW
19. SKIN
20. CANTED BULKHEAD

Figure 4-7. Windshield Installation (Later Models) (cont.)

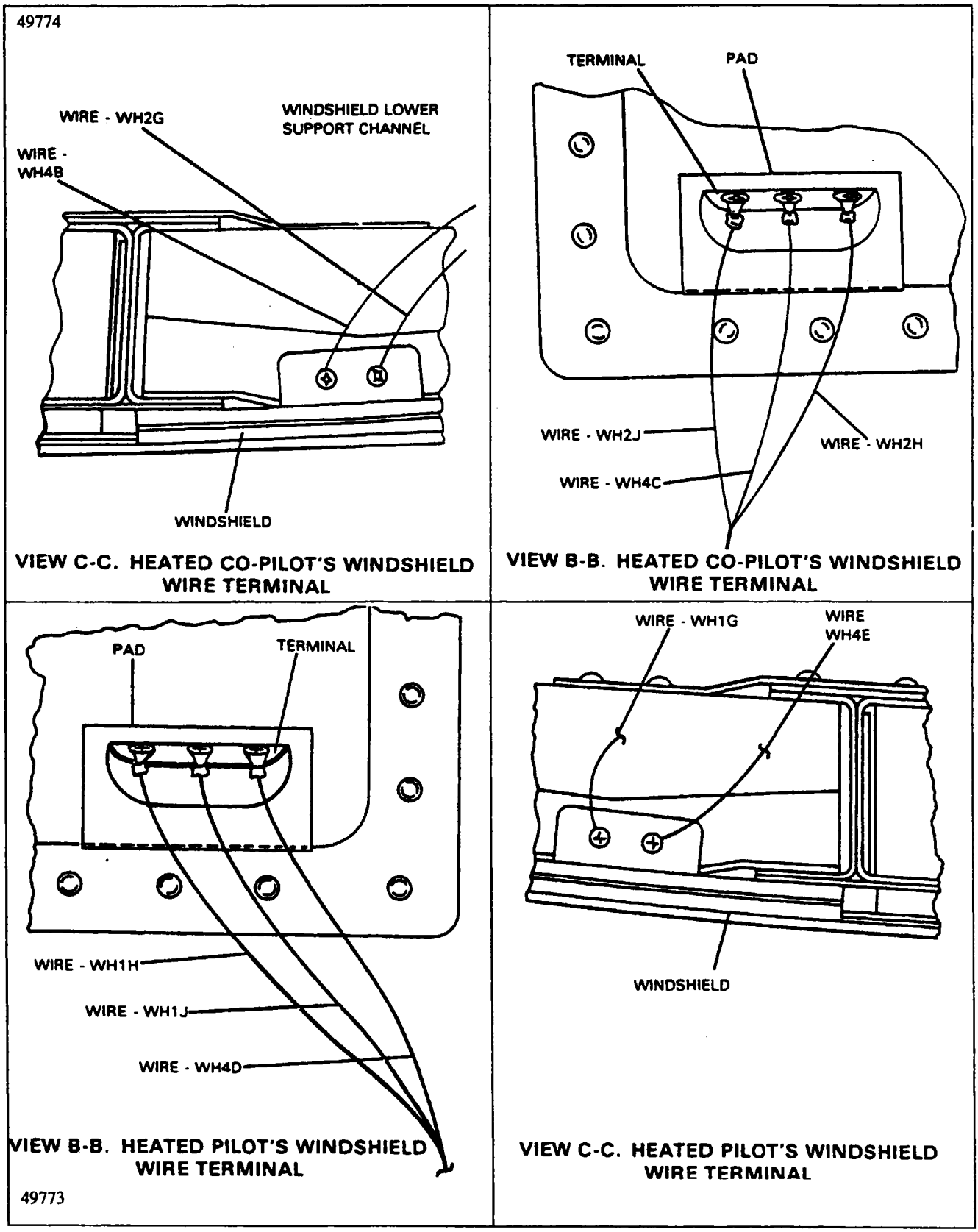

Figure 4-7a. Heated Windshield (Later Models)

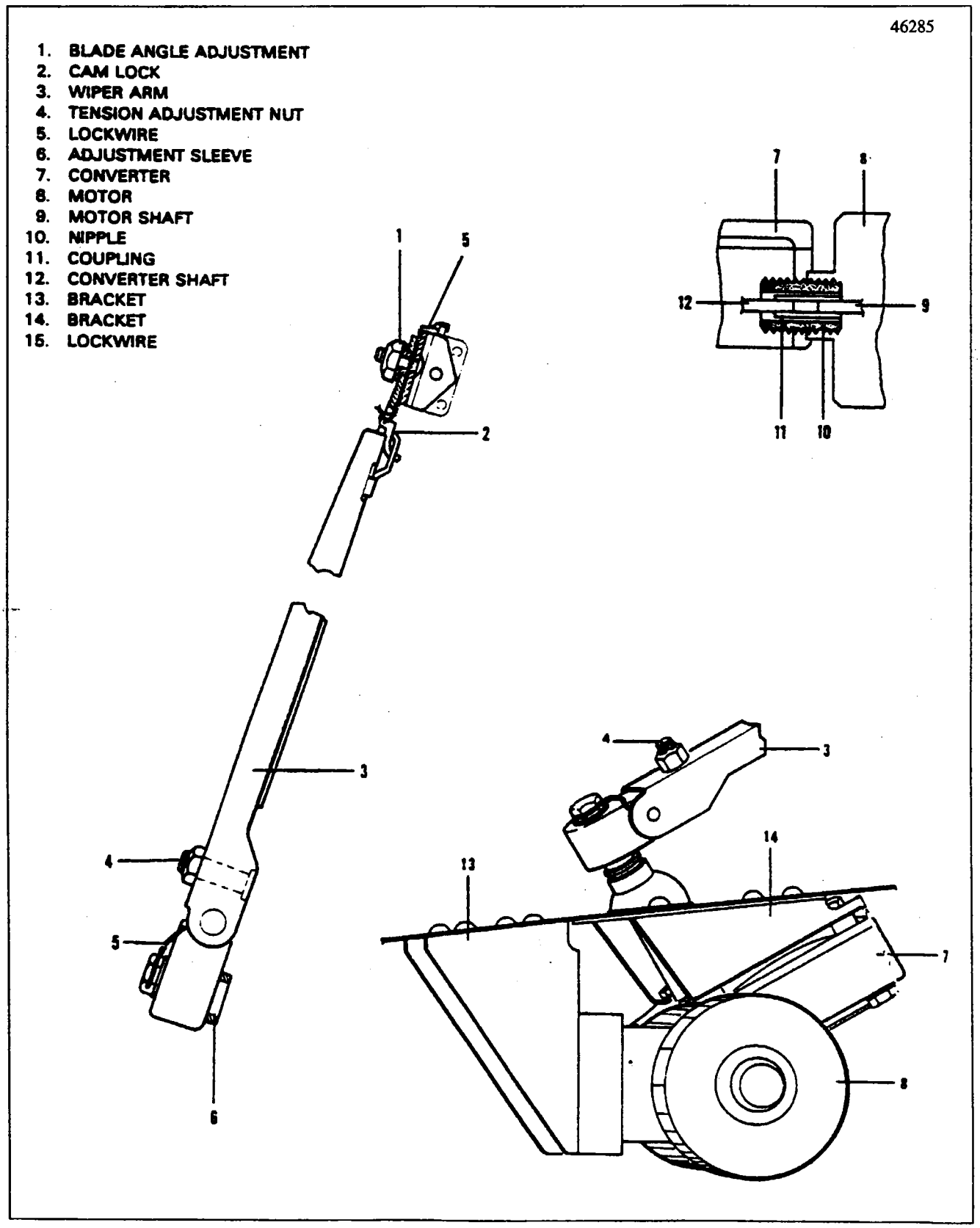

Figure 4-8. Windshield Wiper (PA-31T, PA-31T1)

4-48. WIPER BLADE AND ARM INSTALLATION. (Refer to Figures 4-8 and 4-8a.)

a. Install the wiper blade to the arm assembly and ascertain that the blade is locked and safety wired to the arm.

b. Turn the wiper switch on momentarily to the PARK position; then position the arm assembly (3) and adjustment sleeve (6) on the serrated converter shaft so the wiper blade is clearing the windshield center post by approximately 2.00 to 2.25 inches during operation.

c. If the arm is not in the proper position, remove the arm and sleeve and rotate it in the direction required to get the proper setting.

NOTE

The outside teeth on the adjustment sleeve will not locate the arm in the desired position.

d. Install the bolt through the wiper arm into the converter shaft. Tighten and safety with MS20995-C41 lockwire (5).

4-49. WIPER BLADE AND ARM ADJUSTMENT. (Refer to Figures 4-8 and 4-8a.)

a. Adjust the wiper blade height on the windshield by unlocking the blade height adjustment cam (2).

b. Adjust the blade height on the windshield so the bottom of the blade clears the windshield collar by 2.50 inches. Lock the adjustment cam.

c. To adjust the wiper blade angle, loosen the nut (1) on the wiper blade attachment stud and rotate the blade until it is parallel with the windshield center post; then tighten the nut on the stud.

d. Adjust the wiper arm tension to obtain 3-4 pounds tension at the blade pivot point by adjustment of the nut (4) on the wiper arm adjustment stud.

NOTE

Ascertain that the base of the adjustment stud (4) is in the recess provided in the wiper arm (3).

e. After wiper has been adjusted and adjustment latch locked, install lockwire.

4-50. SIDE WINDOWS.

4-51. REMOVAL OF SIDE WINDOWS.

a. Remove the trim molding from around the inside of the window.

b. Remove the sealant from around the locknuts securing the window to the fuselage.

c. Remove the locknuts and washers from the screws and remove the screws.

d. Remove the window by pushing it in toward the center of the fuselage.

e. Clean all traces of old sealant from around window frame.

4-52. INSTALLATION OF SIDE WINDOWS.

a. Apply a bead of sealant around the inside of the window frame.

b. Install the window from inside the cabin.

c. Install the machine screws and secure them with washers and locknuts. Torque to 15 to 20 inch-pounds.

d. Install the trim molding around the inside of the window.

4-52a. WINDOW REPAIRS / REWORK PROCEDURE .

See Appendix, Window Inspection and Repair — Standard Practices; Aerofiche Card 6 - Grid 6H1.

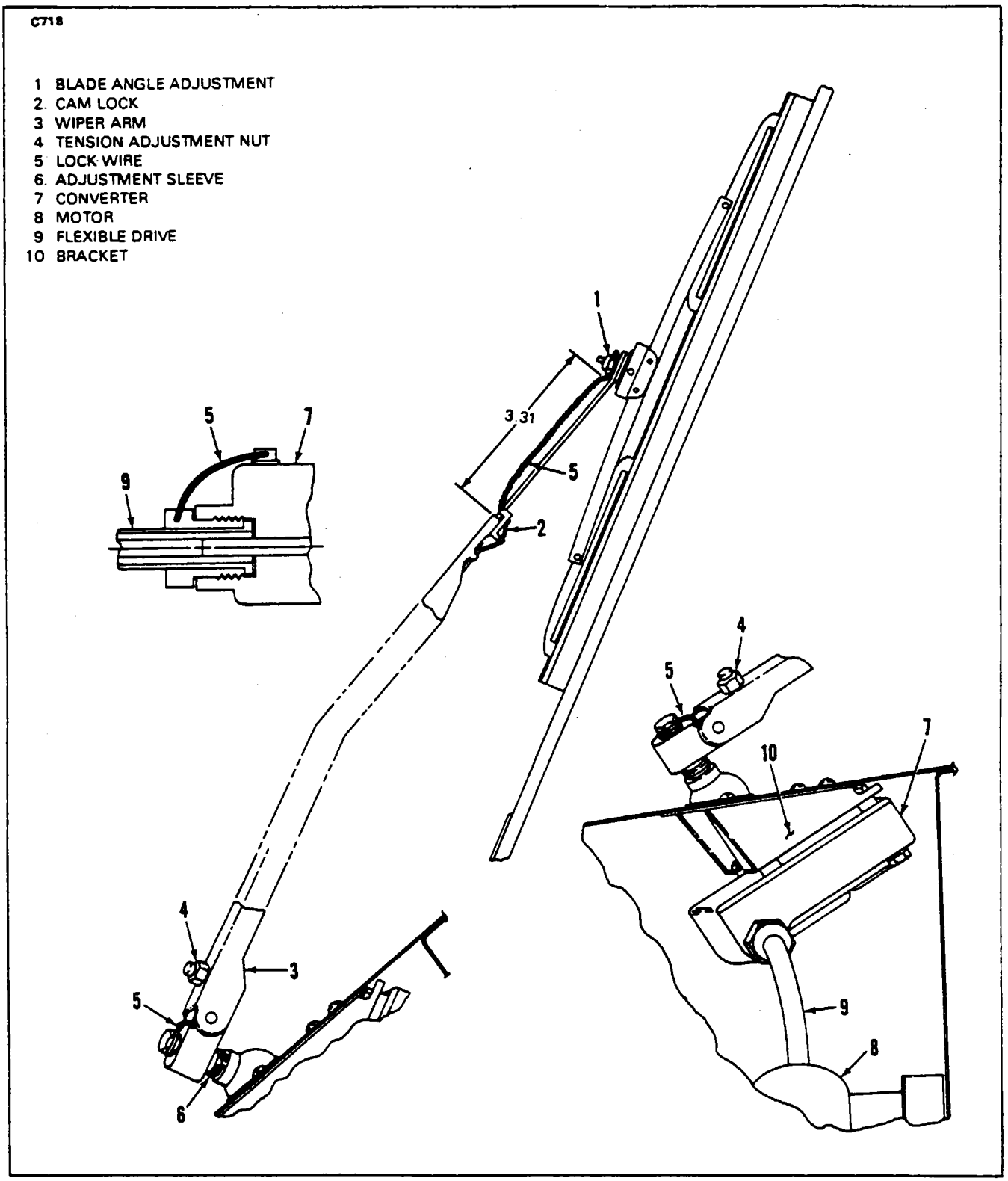

Figure 4-8a. Windshield Wiper (PA-31T2)

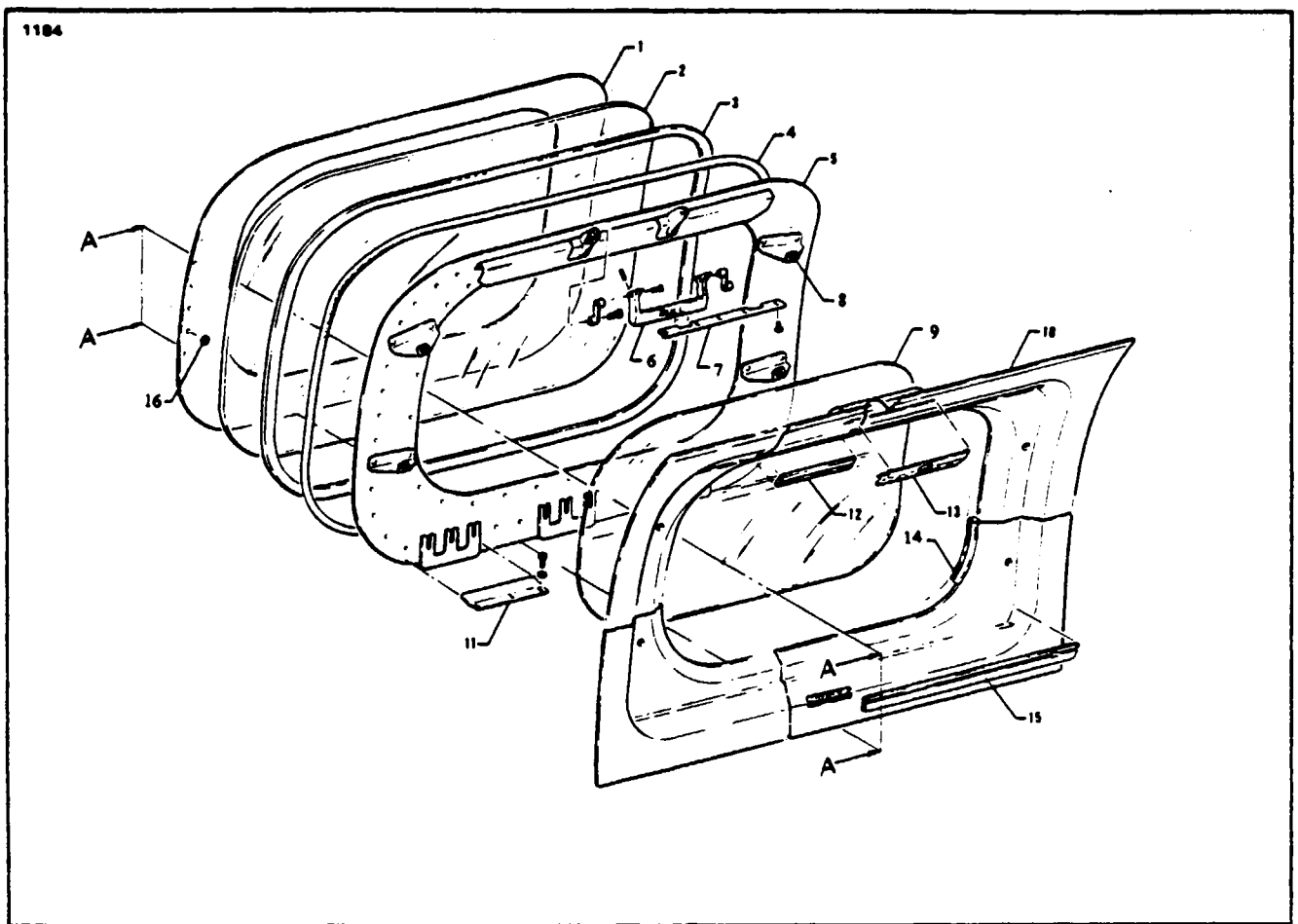

1. OUTER PLATE
2. WINDOW (OUTER)
3. SPACER
4. SEAL
5. INNER PLATE
6. HANDLE
7. STRIKE CATCH
8. CLIP ASSY.
9. WINDOW (INNER)
10. MOULDING
11. PLATE
12. CONTAIN TRACK (UPPER)
13. PLACARD - EMERGENCY EXIT LATCH
14. EXTRUSION
15. CURTAIN TRACK (LOWER)
16. WASHER
17. SKIN
18. INTERCOSTAL CHANNEL
19. TEFLON TAPE (SEE NOTE)

NOTE

TEFLON TAPE USED ONLY ON MODELS: PA-31T - S/N 31T-8120036 AND UP; PA-31T1 - S/N 31T-8104040 AND UP; AND PA-31T2 - S/N 31T-8166001 AND UP.

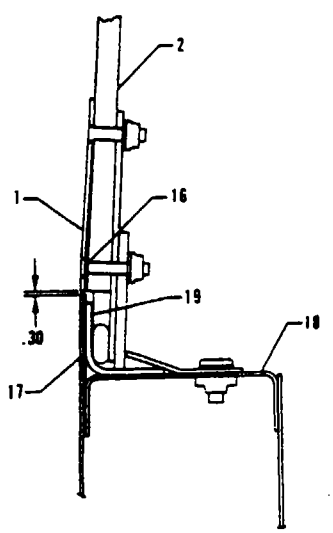

SECTION A-A

48300

Figure 4-9. Emergency Exit and Eyebrow Window

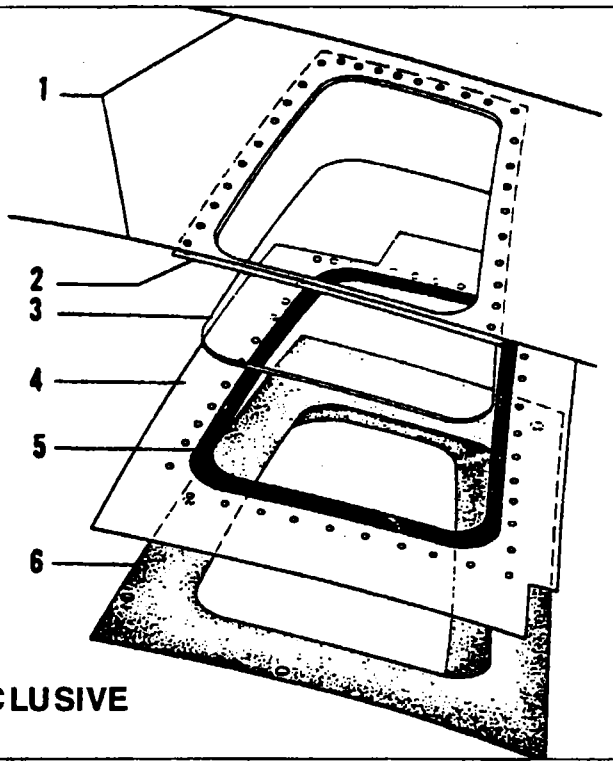

1. FUSELAGE SKIN
2. RETAINER
3. WINDOW
4. JOGGLE PLATE
5. RUBBER O-RING
6. INTERIOR TRIM

PA-31T ONLY SERIAL NOS.
31T-7400002 THRU 31T-7620057 INCLUSIVE

Figure 4-9. Emergency Exit and Eyebrow Window (cont)

THIS SPACE INTENTIONALLY BLANK

4-53. EMERGENCY EXIT WINDOW. There is a 25.75 inch by 19.75 inch emergency exit window on the right side of the fuselage. A release handle at the top of the window frame is used to open the exit. Pull the handle to unlock the latch and continue to pull the window and frame into the cabin. The frame of the emergency exit window is provided with a "Rubatex" seal when built at the factory. To prevent damage to this seal, the emergency exit should be handled with care during removal and installation.

4-53a. INSPECTION AND SERVICING OF EMERGENCY EXIT WINDOW. At each hundred hour inspection event, the emergency exit should be removed from the fuselage to insure its operation. If the window sticks or is hard to remove, inspect the rubber seal on the window frame to insure it is still serviceable; and, spray both the window frame and fuselage frame with silicone. Inspect the fuselage frame and remove any excess skin lap sealant that may have extruded from structural parts and/or fittings. This excess sealant may cause the window seal to stick to the fuselage frame.

4-54. REMOVAL OF EYEBROW WINDOW. (Model PA-31T with serial numbers 31T-7400002 to 31T-7620057 inclusive.) (Refer to Figure 4-9.)

a. Remove the side window trim.
b. Loosen the front overhead panel.
c. Remove the aft overhead panel.
d. Loosen the radio speaker cover.
e. Remove the eyebrow window trim.
f. Remove nuts securing the window in place.
g. Carefully tap the outside of the window to loosen the sealant. Do not push violently on the outside of the window, as this may result in damage to the fuselage skin if there is a strong seal between the window and the fuselage.
h. Remove the rubber cord that fits between the window and the joggle plate.
i. Separate the retainer from the window.
j. Remove all traces of sealant from the retainer and around the window opening on the joggle plate.

4-55. INSTALLATION OF EYEBROW WINDOW. (Model PA-31T with serial numbers 31T-7400002 to 31T-7620057 inclusive.) (Refer to Figure 4-9.)

a. Wipe the new window with a naphtha solvent using a clean cloth.
b. Install a new rubber cord around the window.
c. Apply a bead of sealant (see Note) around the joggle plate, around both sides of the window, and on the window side of the retainer plate.
d. Attach the retainer plate to the window and install the window by aligning the holes in the retainer plate with the screws. Secure the window with the nuts and torque 15 to 20 inch-pounds.
e. Install the eyebrow window trim.
f. Secure the radio speaker cover, aft overhead panel and forward overhead panel.
g. Install the side window trim.

4-55a. STORM WINDOW. A storm window is provided in the pilot's side window. This storm window consists of a "stretched" plexiglas window installed in a stainless steel (Type 321) window frame with a push-button latch.

4-55b. REMOVAL OF STORM WINDOW ASSEMBLY.

a. With the storm window open remove the six (6) equally spaced screws which secure the storm window inner ring and outer trim ring to the side window.
b. Remove the storm window from inside the cabin.

NOTES

1 SEAL BETWEEN INNER RING AND TRIM RING WITH SEALANT MIL-S-7502B REMOVE EXCESS OR VISIBLE SEALANT
2 SEAL BETWEEN WINDOW AND TRIM RING WITH SEALANT MIL-S-7502B REMOVE EXCESS OR VISIBLE SEALANT
3 SPLICE IN SEAL MUST BE AT TRAILING EDGE OF WINDOW CUT SEAL 75 IN. LENGTH AT SPLICE AND CEMENT ENDS TOGETHER WITH 3M #EC-847 CEMENT
4 CEMENT SEAL TO RETAINER WITH 3M #EC-847 CEMENT

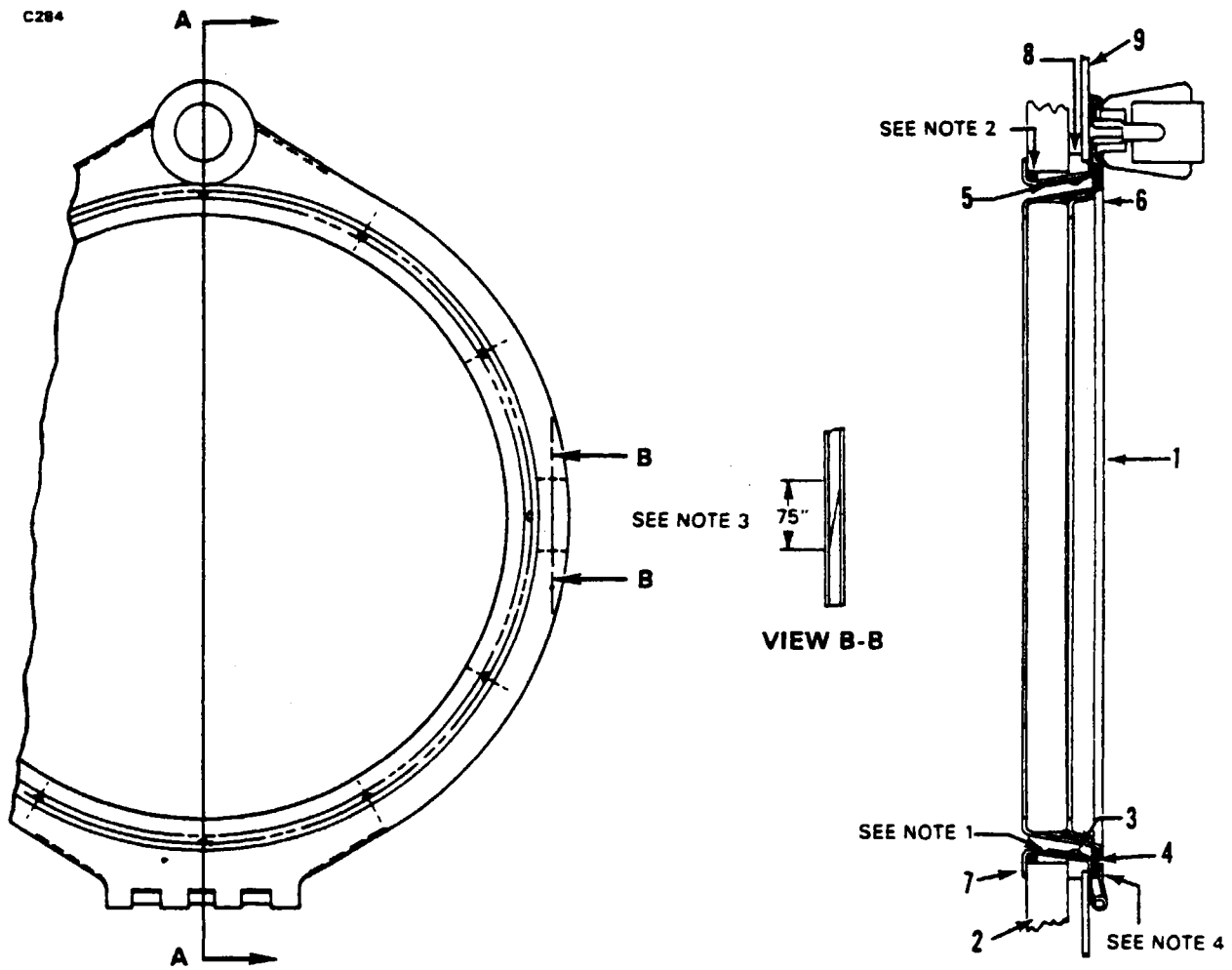

1 STORM WINDOW ASSEMBLY
2 SIDE WINDOW
3. SCREWS (6 EACH)
4 SEAL
5 INNER RING
6. RETAINER
7 TRIM RING
8. SPACER (01117-2)
9 INNER WINDOW

Figure 4-9a. Storm Window Installation

4-55c. INSTALLATION OF STORM WINDOW ASSEMBLY.

a. With MIL-S-7502B sealant applied to the trim ring as shown in Figure 4-9a position the trim ring in the storm window opening.

b. Position the spacer (PAC P/N 01117-2) around the trim ring as shown in Figure 4-9a.

c. Apply MIL-S-7502B sealant to the outer rim (see Note 1) of the inner ring on the storm window assembly and place the window into position in the opening.

d. Align the holes in the inner ring on the storm window with the holes in the trim ring. Install the six retaining screws.

NOTE

Sealant to be used for windows is PR 1221 B-2 Code No. 914 046. This is available in 6 ounce cartridges. Mineral spirits or Apperson solvent No. 120 should be used to remove excess sealant. Toluol may be used in areas away from windows.

4-56. NOSE CONE.

4-57. REMOVAL OF NOSE CONE.

a. Gain access to the locking handle.
b. Pull the handle down completely to unlock the four locking pins.
c. Swing the nose cone forward and to the right of the fuselage.
d. Disconnect any electronic cables going into nose cone.
e. The hinge pin is now accessible and can be removed.
f. Support the nose cone before removing the hinge pin.

4-58. INSTALLATION OF NOSE CONE.

a. Position the nose cone hinge with the other half of the hinge on the airplane.
b. Insert the hinge pin and secure in position with screw.
c. Connect any electronic cables removed from nose cone.
d. Close the nose cone and secure in place by pushing the locking handle up.

4-59. CABIN ENTRANCE DOOR.

4-60. REMOVAL OF CABIN ENTRANCE DOOR. (Refer to Figure 4-10.)

a. Place a padded support under the door to relieve tension from the two support cables.

b. Remove the scuff cover from over the door hinge.

c. Remove the boot over the door snubber attachment point on the door: then disconnect the snubber if installed. (Refer to Paragraph 4-120, Cabin Door Snubber.)

d. Disconnect the two support cables from the door.

e. Disconnect the pressure line to the door seal.

f. Remove the hinge pin and lift the door to separate the hinges and remove the door from the airplane.

4-61. INSPECTION OF CABIN ENTRANCE DOOR.

a. Make a visual inspection of parts for excessive wear, metal fatigue and signs of improper adjustments.

b. Operate the door latch mechanism and observe for proper functioning of all locking lugs and for any signs of a binding or loose nature.

c. Refer to Paragraphs 4-63 through 4-66 for repair and service instructions of the various door components.

d. Refer to Section II for the proper lubrication of the door and related mechanisms.

4-62. INSTALLATION OF CABIN ENTRANCE DOOR. (Refer to Figure 4-10.)

a. Place a padded support under the door.

b. Position the hinge half on the door with the other half of the hinge on the airplane and install the hinge pin.

c. Connect the two support cables to the door.

d. Connect the pressure line to the door seal.

e. Connect the door snubber and replace the boot, if installed.

f. Install the scuff cover over the door hinge.

g. Remove the padded support from under the door and check door fit.

4-63. CABIN ENTRANCE DOOR LATCH MECHANISM. The latching mechanism consists of seven locking lugs and a series of push-pull rods and bellcranks which are all controlled from a centrally located handle.

4-64. REMOVAL OF LATCHING MECHANISMS. (Refer to Figure 4-10.)

a. Upper and lower latching mechanism:

1. Remove the interior trim panels from the door.
2. Remove the cover plate over the bellcrank.
3. Remove the bolt connecting the vertical push rod to the bellcrank.
4. Remove the bolts connecting the right or left push rod, or both if necessary, to remove complete assembly.
5. The bellcrank or the push rod and lugs can now be removed.

b. Center latching mechanism:

1. Remove the interior trim panels from the door, if not previously removed.
2. Remove the inside handle and cover plate.
3. Remove the bolts, spacers, and locknuts connecting the vertical push rods extending to the upper and lower latching mechanism bellcranks.
4. Remove the bolts connecting the right or left push rod, or both if necessary, to remove the complete assembly.
5. Remove the bolt and locknut to remove the bellcrank.
6. The outside handle is removed from the outside of the door.
7. Remove the push rods extending to the sides of the door along with the locking lugs.

4-65. INSTALLATION OF LATCHING MECHANISM. (Refer to Figure 4-10.)

a. Upper and lower latching mechanism:

1. Install the push rods and locking lugs into the door.
2. Install the bellcranks, and position the upper bellcrank with the push-pull rod attachment point to the forward side of the door and the lower bellcrank with the push-pull rod attachment point to the aft side of the door.
3. Install the upper vertical push rod (the curved end up) to the upper bellcrank and secure along with the right push rod using bolt, washer and locknut.
4. Connect the left push rod to the bellcrank and secure with bolt, washer and locknut.
5. Install the lower vertical push rod to the lower bellcrank and secure along with the left push rod using bolt, washer and locknut.
6. Install the cover plates and adjust lugs in accordance with Paragraph 4-66.

b. Center latching mechanism:
1. Install the push rods and locking lugs into the door.
2. Install the outside handle, if previously removed.
3. Install the bellcrank and secure with bolt and locknut.
4. Connect the push rods to the bellcrank and be sure to install the spacers between the vertical and horizontal push rods as shown in Figure 4-10. Secure with bolts and locknuts.
5. Install the cover plate and inside handle and adjust lugs in accordance with Paragraph 4-66.

4-66. ADJUSTMENT OF LATCHING MECHANISM. (Refer to Figure 4-10.)
a. Remove the inside trim panels and access plates.
b. With the door opened, position the handle in the open position.
c. Check all seven locking lugs to ascertain that all are even with the ends of the lug guides on the door.
d. If any of the lugs are found to extend beyond the guides, or are inside the guides, loosen the locknuts on the push rod and turn the push rod to get the proper setting.
e. Position the handle in the closed position and check all seven locking lugs for proper extension of approximately 1.75 inches.
f. If any of the lugs are found out of adjustment, loosen the locknuts on the push rod and adjust the push rod to get the proper extension.
g. Ascertain that all the locknuts on the push rods are tight and all the lugs and bellcranks operate freely.
h. Replace the access plates and trim panels removed.

4-67. CABIN DOOR AUXILIARY LOCK.

4-68. REMOVAL OF AUXILIARY LOCK. (Refer to Figure 4-10.)
a. Remove the knob from the auxiliary lock rod extending through the inside surface of the entrance door next to the handle.

NOTE

The interior trim panels must be removed to gain access to the cover plate over the lock mechanism.

b. Remove the four screws securing the cover plate and remove.
c. Remove the cotter pin and washer from the end of the lock rod extending through the lock bushing and remove the rod.
d. To remove the lock bushing, plunger and spring from the door, loosen and remove the two machine screws and nuts securing the assembly to the door.

4-69. INSTALLATION OF AUXILIARY LOCK. (Refer to Figure 4-10.)
a. Install the spring into the plunger and the plunger and spring into the bushing.

NOTE

Ascertain that the O-ring is installed in the bushing, around the plunger.

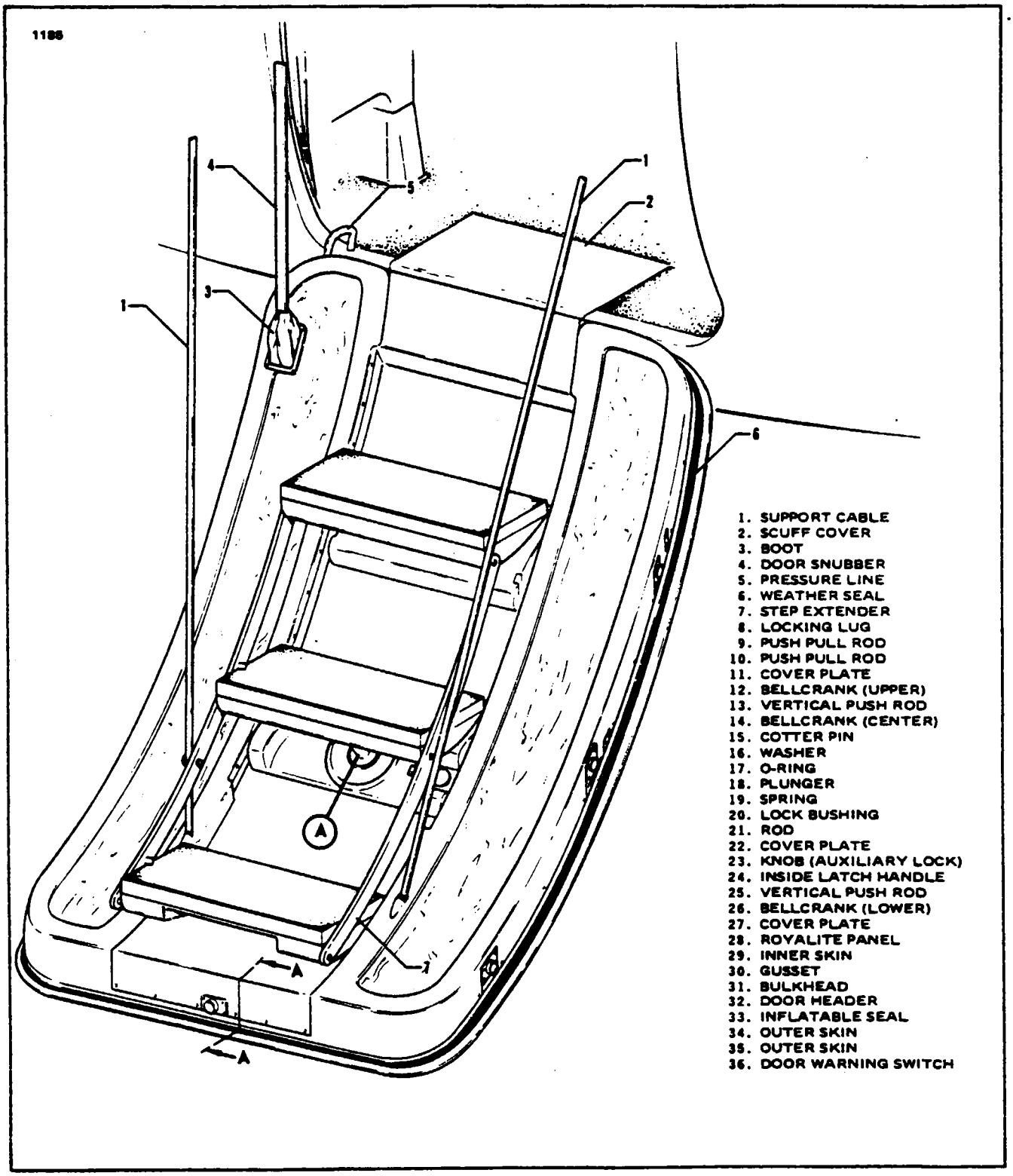

Figure 4-10. Cabin Entrance Door

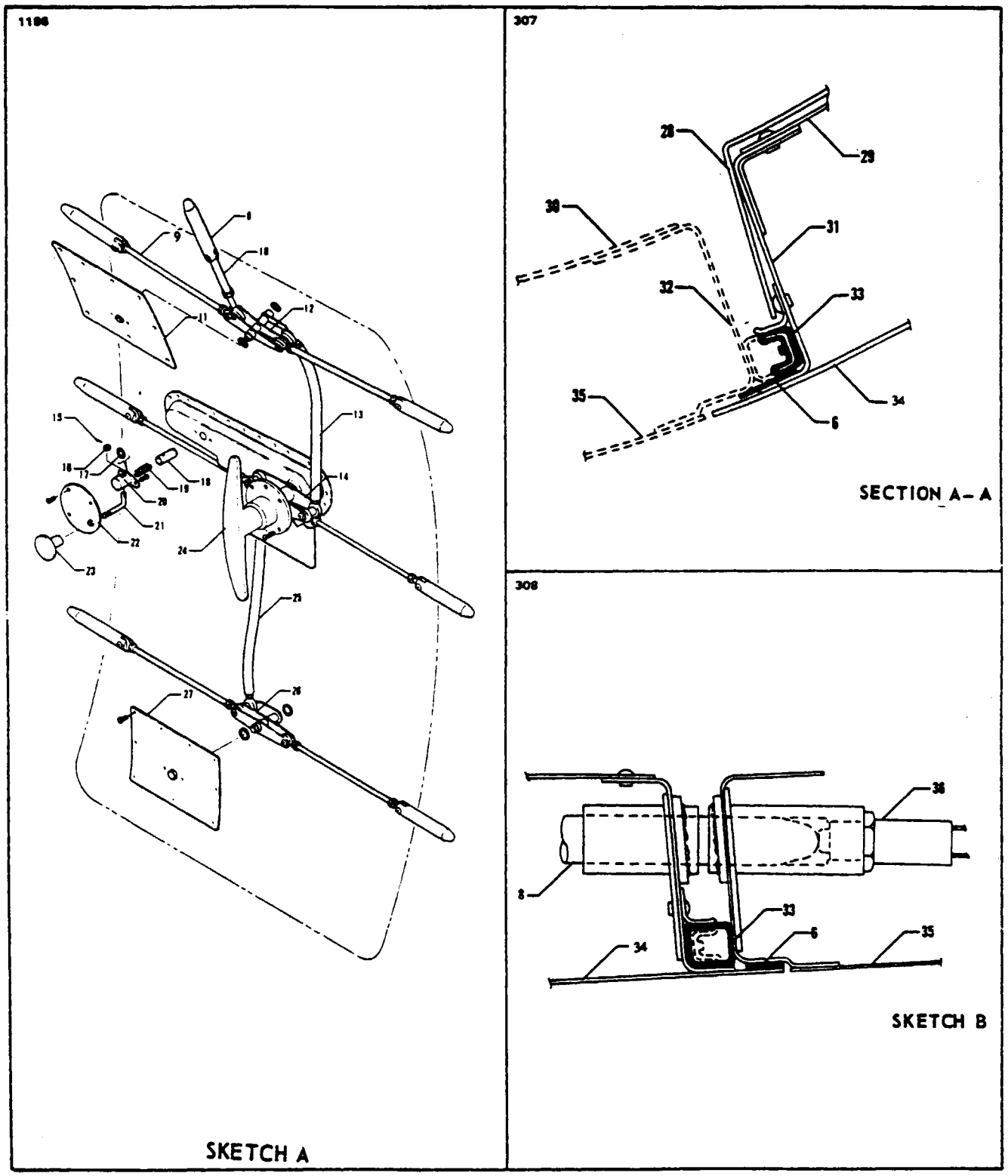

Figure 4-10. Cabin Entrance Door (cont.)

b. Place the assembly into the access opening and secure it in place with two screws and nuts.

c. Install the lock rod into the slot in the bushing and through the hole in the plunger, and secure in place with washer and cotter pin.

d. Install the cover plate, being sure the lock rod extends out through the bushing in the cover.

e. Secure the cover to the door with four screws, and replace the trim panels on the interior of the door and the knob on the end of the lock rod.

4-70. REMOVAL OF HANDLE (INSIDE). (Refer to Figure 4-10.)

a. Remove the screw pin from the handle.

b. Remove the handle and teflon washer.

c. Remove the screws securing the cover plate and remove the plate.

d. Remove the machine screws and locknuts to remove the spindle from the door.

e. Reach into the opening made by the removal of the cover plate and remove the bolt and locknut securing the outer handle and shaft to the bellcrank.

4-71. CABIN ENTRANCE DOOR SEAL ASSEMBLY. This is an inflatable seal and has an air inlet valve from the lower corner of the seal to a control solenoid valve.

A metal flange is installed around the seal to keep it in place. When the door is closed and the cabin is pressurized, the door seal is pressurized and expands against the door frame to completely seal the door opening.

4-72. REMOVAL OF CABIN DOOR SEAL.

a. Remove the lower trim from the door and disconnect the rubber hose from the inlet valve on the seal.

b. Remove the rubber seal from around the door using MEK or white gas to cut through the cement.

CAUTION

When removing the inlet valve from the hole in the door, use extreme caution not to damage it.

c. Clean the door and seal with MEK or white gas to remove all traces of old cement.

4-73. INSTALLATION OF CABIN DOOR SEAL.

a. Clean both the door and seal with MEK or white gas prior to applying cement.

b. Apply one even coat of 3M #1300L cement to the cleaned surfaces of the door and seal except on the retainer side apply 3M #EC-847. Allow to dry and then apply a second coat and allow to dry.

CAUTION

Take care to avoid getting cement on areas not to be cemented.

c. Activate the cement by wiping the cemented surfaces lightly with Toluol. Do approximately two feet at a time and immediately position and press the seal in place. Start at the air inlet on the inflatable seal.

CAUTION

Care must be taken to avoid stretching the inflatable seal. Mark the seal and door at ten inch intervals to gage length.

d. After positioning the seal correctly on the door, press the seal firmly in place to assure complete adhesion.

e. Clean off excess cement with a cloth dampened in MEK or white gas. Allow cement to set for four hours before using the door and inflating the seal.

f. Connect the rubber hose to the inlet valve and replace the trim panel over the door.

4-74. CABIN ENTRANCE DOOR STEP MECHANISM.

4-75. REMOVAL OF STEPS. (Refer to Figure 4-10.) With the cabin entrance door opened and the steps extended, proceed to remove the steps in accordance with the following instructions:

a. Remove the nuts, bolts, and washers from both sides of each step which are used to connect the step support tubes linking the three steps together.

b. Remove the hinge pins which secure the step half of the hinge with the door half of the hinge and remove the steps.

4-76. INSTALLATION OF STEPS. (Refer to Figure 4-10.)

a. Position the steps to the door and install the hinge pins.

b. Position the step support tubes along the sides of the steps, being certain to place the tube with the door support cable guide on the forward side of the door. Be sure that the step stops on the step support tubes are pointing towards the center of the entrance door.

NOTE

Ascertain that the door support cable is routed between the roller and bracket on the forward step support tube assembly.

c. Install the bolts through the step support tubes and install washers between the tubes and step brackets; then secure with locknuts.

4-77. CARGO DOOR.

4-78. REMOVAL OF CARGO DOOR. (Refer to Figure 4-11.)

NOTE

The cabin door must be open prior to removing the cargo door.

a. With the door open, disconnect the door support assembly from the door.

b. Disconnect door seal hose.

c. Remove hinge pin and remove the door from airplane.

4-79. INSTALLATION OF CARGO DOOR. (Refer to Figure 4-11.)

a. Position the door and align hinges. Insert hinge pin and bend both ends.

b. Attach door support assembly to the door.

c. Operate door latch to determine that the locking pins are engaging properly.

4-80. CARGO DOOR LATCH ASSEMBLY. The latching mechanism consists of three locking pins, two latch assemblies and a series of push rods controlled by two bellcranks from a centrally located handle.

4-81. REMOVAL OF CARGO DOOR LATCH ASSEMBLY. (Refer to Figure 4-11.)

a. Remove the trim panels and bellcrank cover plates.

NOTE

Index the push rods to aid in reassembly.

b. Remove the hardware securing the push rods to bellcranks.

c. Remove the bellcrank assemblies from the door along with teflon washers used on left bellcrank only.

d. Remove the hardware securing the push rods to the upper door latch assemblies.

e. Remove the push rods from the door.

f. The remaining push rods with the locking pins attached may now be removed.

4-82. INSTALLATION OF CARGO DOOR LATCH ASSEMBLY. (Refer to Figure 4-11.)

a. Install the upper door latch assembly push rods and secure with the appropriate hardware.

b. Install the remaining push rods with locking pins attached.

c. Install the bellcrank assemblies using new teflon washers where required.

d. Secure with the push rod assemblies to the bellcrank assemblies using the appropriate hardware.

e. Install the bellcrank cover plates.

f. With the door handle in the closed position check the three locking pins for proper extension (approximately 1.75 inches)

g. Determine that all locknuts on push rods are secure and the door latch assembly operates freely.

h. Install trim panels previously removed.

4-82a. SEAL ASSEMBLY - CARGO DOOR.

4-82b. REMOVAL OF CARGO DOOR SEAL. (Same as Paragraph 4-72.)

4-82c. INSTALLATION OF CARGO DOOR SEAL. (Same as Paragraph 4-73.)

4-83. FORWARD BAGGAGE DOOR.

4-84. REMOVAL OF FORWARD BAGGAGE DOOR.

a. With door open and hinges exposed, remove the cotter pins and washers from the hinge pins.

b. While supporting door, remove the hinge pins and lift the door for removal.

4-85. INSTALLATION OF FORWARD BAGGAGE DOOR.

a. While supporting door, align the hinges in the hinge bracket assemblies and insert the hinge pins.

b. Replace the washers and insert the cotter pins into the ends of the hinge pins.

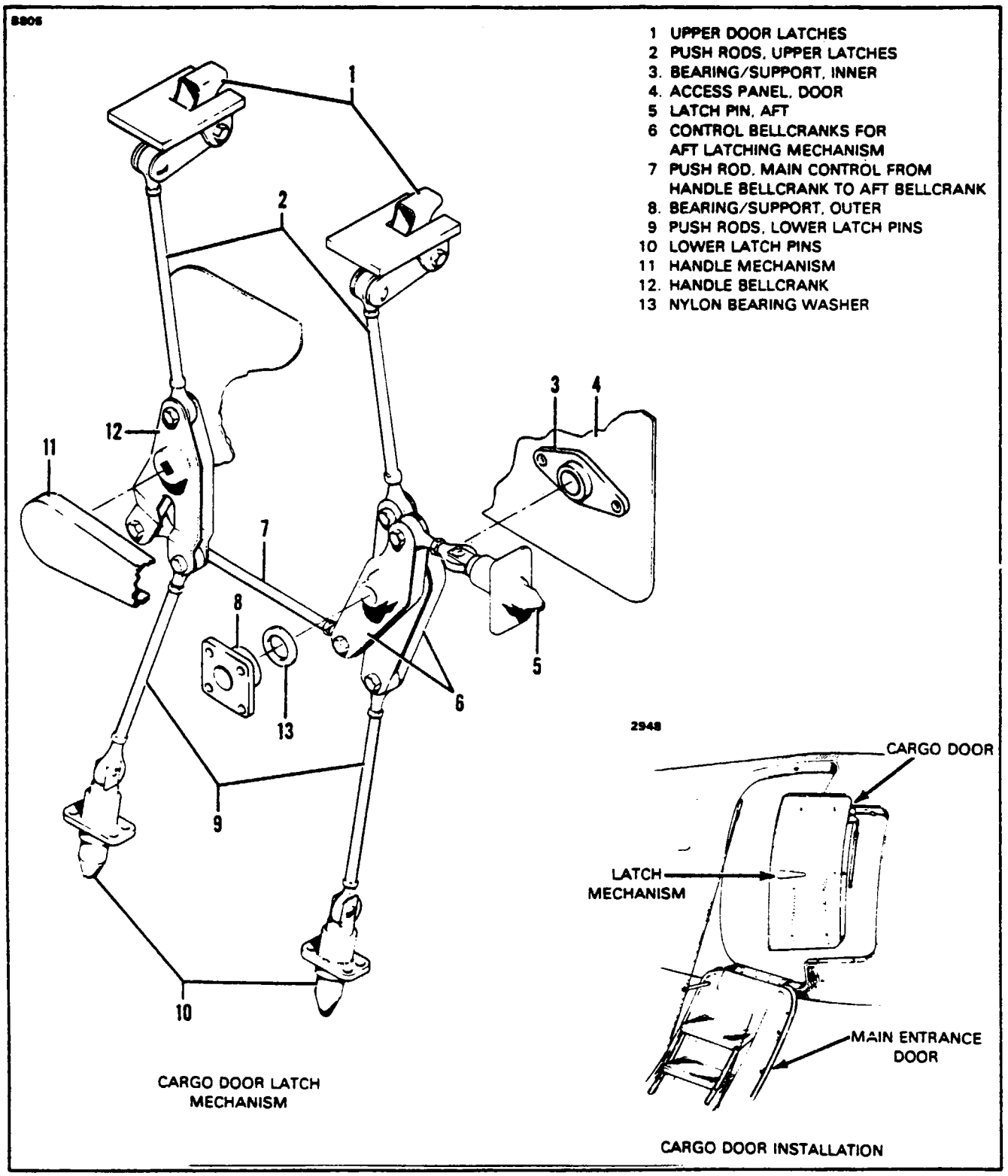

Figure 4-11. Cargo Door Installation

4-86. REMOVAL OF FORWARD BAGGAGE DOOR LATCH ASSEMBLY.

a. Removal procedure for forward baggage door tube and arm assemblies is as follows:

1. With the door open, remove the screws holding the inside cover and remove the cover from door assembly.

2. Disconnect the spring between the link and tube assembly. Also, remove two other springs located on either side of the tube assembly to the baggage door assembly.

3. Remove the roll pin, located between the tube assembly and door handle. Also, remove the spring link at this time.

4. Remove six machine screws (three on each end) holding the arm assemblies to the door assembly and remove the tube with both arm assemblies from door.

5. The arm assemblies can be removed from the clevis end of the tube by removing the cotter pins, washers and pins.

b. Removal procedure for forward baggage door handle assembly is as follows:

1. Disconnect roll pin located between the tube assembly and the handle, if not previously done.

2. Remove six locknuts and machine screws holding the handle and bracket and remove from door assembly.

3. The handle can be removed from the bracket by removing the cotter pin, washers and pin.

c. Removal procedure for forward baggage door key lock assembly is as follows:

1. Remove two screws from the outside of the door to disconnect the lock guide plate assembly located on the inside of door.

2. The key lock assembly can now be removed by removing the retaining nut and washer from the back of the key lock assembly.

4-87. INSTALLATION OF FORWARD BAGGAGE DOOR LATCH ASSEMBLY.

a. Procedure for installing the key lock assembly is as follows:

1. Insert the key lock assembly from the back side of door with the latching arm towards the handle cut out on door.

2. Replace the washer and retaining nut to back of lock and secure.

3. Install lock guide plate and secure with two screws from outside of door.

b. Procedure for installing baggage door handle assembly is as follows:

1. The handle and bracket can be assembled if previously taken apart by placing handle into bracket with two washers between handle and bracket and inserting the roll pin.

2. Replace the handle and bracket assembly into the back of the door with the handle to the outer skin of door. Secure assembly with six machine screws and locknuts.

3. If tube assembly was not removed, replace the roll pin between the tube assembly and handle and also replace the spring link. Secure with roll pin.

c. Installation procedure for baggage door tube and arm assemblies is as follows:

1. Secure the arm assemblies to the clevis ends on the tube assembly with pins, washers and cotter pins. Be certain that the proper arm assembly is on each end of tube.

2. The complete tube and arm assembly can now be placed onto the rear of the door, making certain that the projection on the tube aligns with the projection on the handle. Replace the six machine screws (three on each side) to hold the arm assemblies to the door

3. With all holes in both projection and the spring link aligned, insert the roll pin.

4. Connect the three springs at this time. One between the spring link and the tube, and two between the tube assembly and the door assembly.

5. Adjustment should be made at this time before replacing cover. (Refer to Paragraph 4-88.) Use the six machine screws to secure the cover on the door assembly.

4-88. ADJUSTMENT OF FORWARD BAGGAGE DOOR LATCH. Adjustment is done through the removal of the cover and adjustment of two clevis fittings located at the ends of the tube assembly.

a. Remove the cotter pin, washer, and pin from the clevis and arm assemblies and loosen the locknuts between clevis and tube.

b. With handle in the closed position, turn the clevis in or out to get the arms of the arm assemblies to extend out at a 90 degree angle to the edge of the door assembly.

c. When the adjustment is completed, tighten the locknuts and reconnect the clevis and arm assemblies with the pins, washers and cotter pins. Replace the cover and secure with six machine screws.

4-89. CONTROL SURFACE BALANCING.

4-90. CHECKING CONTROL SURFACE BALANCE. The movable control surfaces have been statically balanced at the time of installation at the factory and normally need not be rebalanced unless the surfaces have been repainted, repaired or replaced. Each control surface must be complete including paint, trim tab where required, balance weights, static wicks, etc. Tabs must be held in neutral position with a small piece of tape. Tab actuating rods must be in place and connected to the tab. The forward end of the actuating rods must be disconnected from the attachment points. Disconnected actuating rod (forward ends) must be positioned to correspond to the neutral tab position.

4-91. BALANCING EQUIPMENT. Balancing must be done using test weights called for in the text and Table IV-I thru Table IV-IV for each surface by aircraft model. Any control surface being balanced must be removed from the aircraft and placed in a test fixture (jig) as shown in Figures 4-12, 4-13 and 4-15. The balancing must be accomplished in a draft free area and in a manner which allows unrestricted movement of the control surface.

4-92. BALANCING DEFINITIONS. The following is a list of balancing definitions as used in this service manual.

a. Master Test Weight: A fabricated tool temporarily attached to the control surface to determine when the surface is at its lower static balance limits.

b. Balance Weight: Weight attached permanently to a control balance to produce a static hinge movement within the required range (such as 30 inch-pounds ± 10 inch-pounds trailing edge heavy).

c. Trailing Edge Heavy: Positive static hinge moment, trailing edge of the surface moves downward when released from a neutral position.

d. Leading Edge Heavy: Negative static hinge moment; leading edge of the surface moves downward when released from a neutral position.

e. Master Test Weight Arm: Perpendicular distance between the control surface hinge line and the point of application of the master test weight.

f. 0.1 Pound Test Weight: Small weight or weights added to the master test weight during balancing procedure when the surface is trailing edge heavy with the basic master test weight installed.

g. Trim Weight: Small weight or weights added to the surface balance weight to bring the surface within tolerances. (Sometimes required depending on variations in surface conditions.)

TABLE IV-I. CONTROL SURFACE BALANCING (PA-31T)

NOTES

1. This data indicates final base and trim paint on the various surfaces being balanced.
2. The same number of plates must be used on each elevator.
3. Surfaces must be removed from aircraft for balancing.

Surface	Aileron		Elevator		Rudder
Master Test Weight In Pounds	.60 to 1.50		2.90 to 3.70		5.50 to 6.10
Master Test Weight Arm In Inches	6.67		8.03		9.81
Static Balance Limits In Inch-Pounds	7 ± 3		30 +0 -7		60 +0 -10
	Right	Left	Right	Left	
Weight Of Lead Balance Weight (Lbs.)	3.30	2.20	4.20	4.20	Not Removable
Trim Weight Part Number	Not Allowed		51615		43332
Maximum Number Of Trim Weights Allowed Per Surface	Not Allowed		7 See Note 2		8
	Right	Left	Right	Left	
Maximum Allowable Balance Weights and Trim Weights Per Side In Pounds	3.60	2.40	4.64	4.64	5.05

PPS-60022

TABLE IV-II. CONTROL SURFACE BALANCING (PA-31T1) (WITH TIP TANKS)

NOTES

1. This data indicates final base and trim paint on the various surfaces being balanced.
2. The same number of plates must be used on each elevator.
3. Surfaces must be removed from aircraft for balancing.

Surface	Aileron		Elevator		Rudder
Master Test Weight In Pounds	.60 to 1.50		2.90 to 3.70		5.50 to 6.10
Master Test Weight Arm In Inches	6.67		8.03		9.81
Static Balance Limits In Inch-Pounds	7 ± 3		30 +0 -7		60 +0 -10
	Right	Left	Right	Left	
Weight Of Lead Balance Weight (Lbs.)	3.30	2.20	4.20	4.20	Not Removable
Trim Weight Part Number	Not Allowed		51615		43332
Maximum Number Of Trim Weights Allowed Per Surface	Not Allowed		7 See Note 2		8
	Right	Left	Right	Left	
Maximum Allowable Balance Weights and Trim Weights Per Side In Pounds	3.60	2.40	4.64	4.64	5.05

PPS-50022

TABLE IV-III. CONTROL SURFACE BALANCING (PA-31T1) (WITHOUT TIP TANKS)

NOTES

1. This data indicates final base and trim paint on the various surfaces being balanced.
2. The same number of plates must be used on each elevator.
3. Surfaces must be removed from aircraft for balancing.

Surface	Aileron		Elevator		Rudder
Master Test Weight In Pounds	0.0 to 1.0		2.90 to 3.70		5.50 to 6.10
Master Test Weight Arm In Inches	6.00		8.03		9.81
Static Balance Limits In Inch-Pounds	-3 ± 3		30 +0 -7		60 +0 -10
	Right	Left	Right	Left	
Weight Of Lead Balance Weight (Lbs.)	4.75	3.90	4.20	4.20	Not Removable
Trim Weight Part Number	54395-2		51615		43332
Maximum Number Of Trim Weights Allowed Per Surface	4		7 See Note 2		8
	Right	Left	Right	Left	
Maximum Allowable Balance Weights and Trim Weights Per Side In Pounds	5.48	4.64	4.64	4.64	5.05

PP880022

TABLE IV-IV. CONTROL SURFACE BALANCING (PA-31T2)

NOTES

1. This data indicates final base and trim paint on the various surfaces being balanced.
2. The same number of plates must be used on each elevator.
3. Surfaces must be removed from aircraft for balancing.

Surface	Aileron		Elevator		Rudder
Master Test Weight In Pounds	.2 to .5		2.90 to 3.70		4.0 to 4.9
Master Test Weight Arm In Inches	6.0		8.03		9.81
Static Balance Limits In Inch-Pounds	-1.2 +0 -2		30 +0 -7		48.5 +0 -10
	Right	Left	Right	Left	
Weight Of Lead Balance Weight (Lbs.)	2.43	1.43	4.20	4.20	Not Removable
	Inboard				
	6.00				
Trim Weight Part Number	Not Allowed		51615		43332
Maximum Number Of Trim Weights Allowed Per Surface	Not Allowed		7 See Note 2		2
	Right	Left	Right	Left	
Maximum Allowable Balance Weights and Trim Weights Per Side In Pounds	2.43	1.43	4.64	4.64	5.90
	Inboard				
	6.00				

PP850022

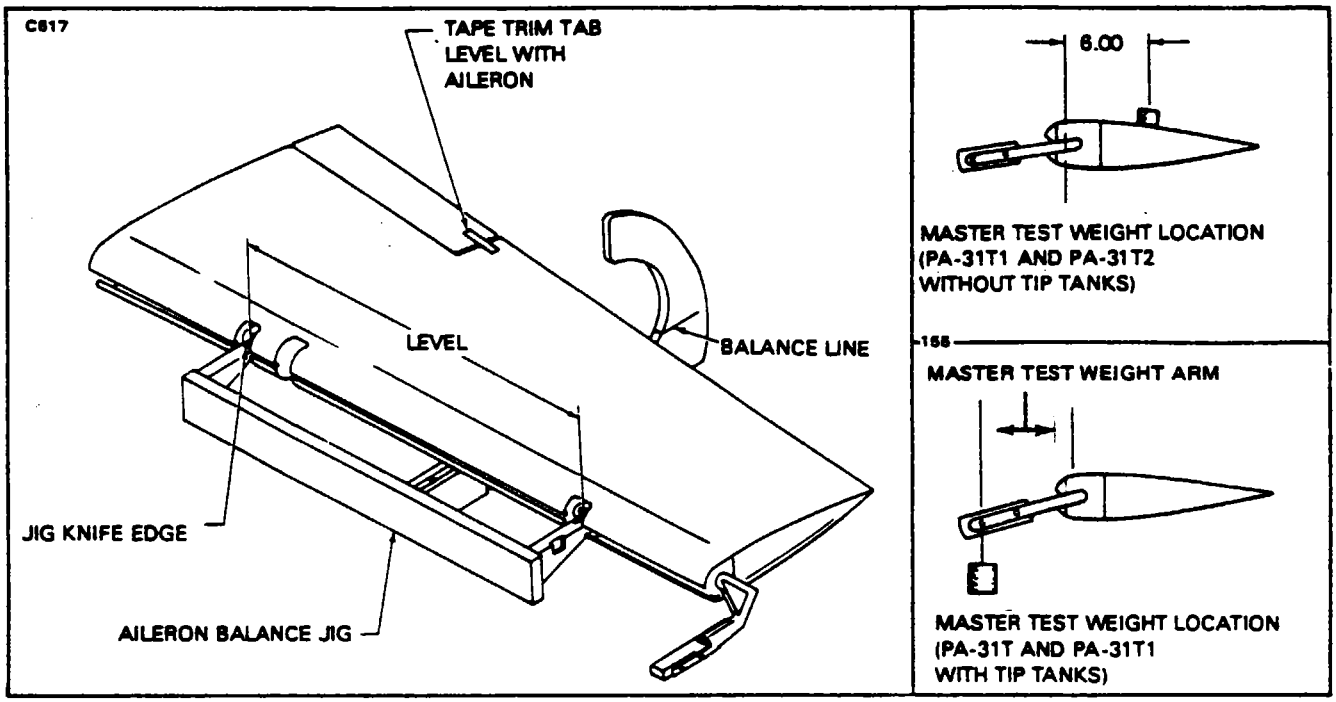

Figure 4-12. Checking Aileron Balance

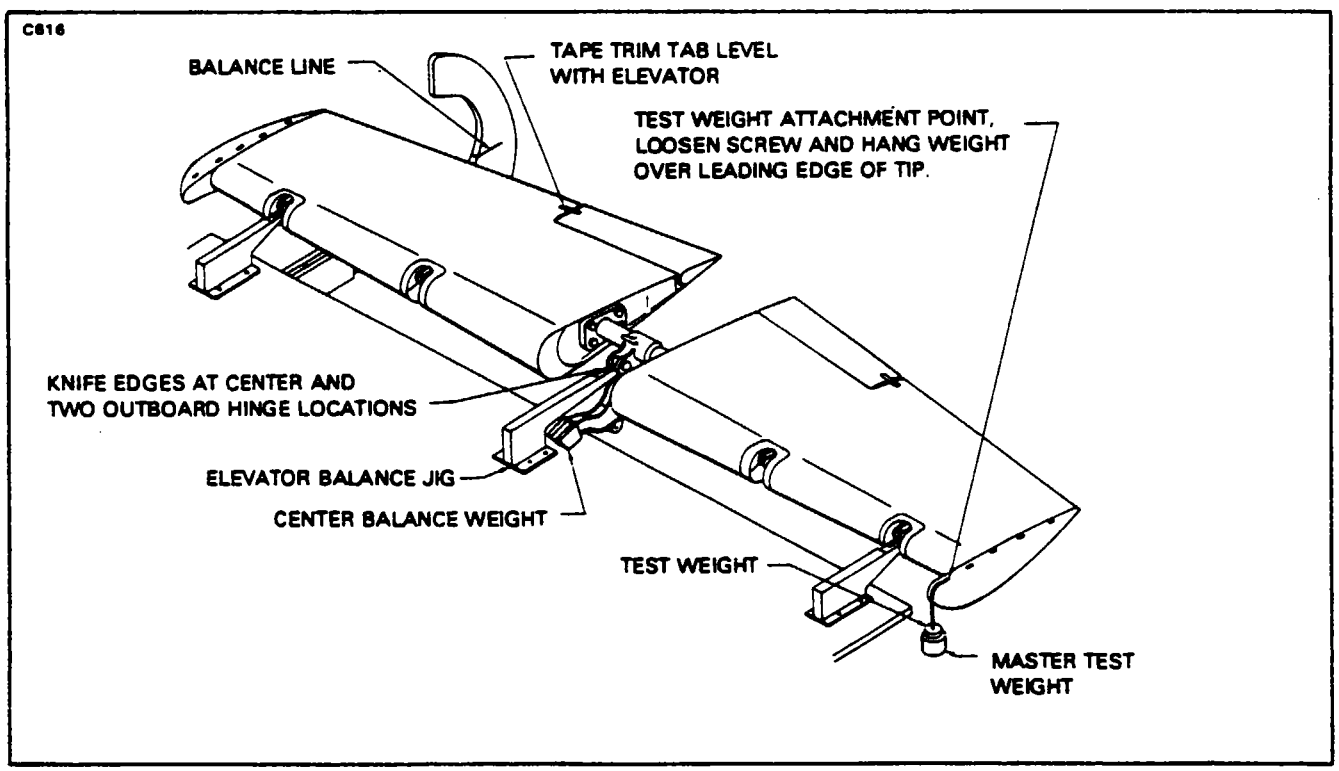

Figure 4-13. Checking Elevator Balance

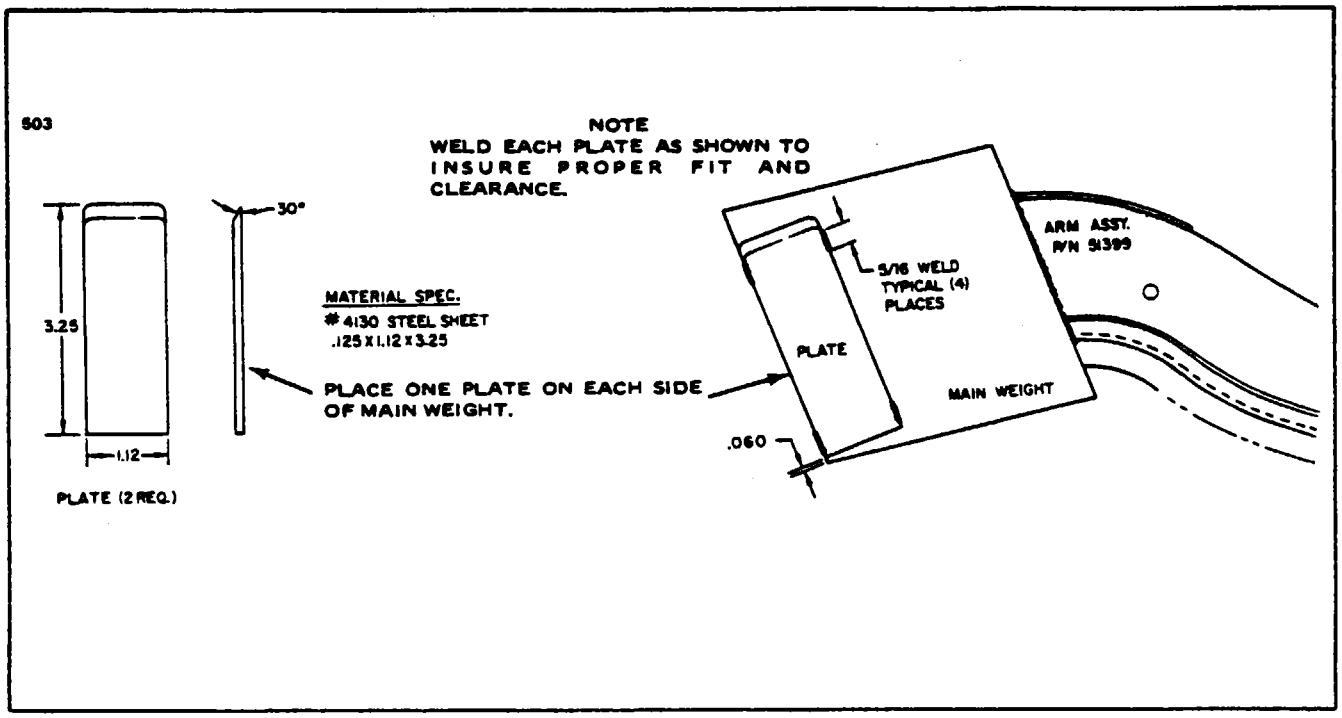

Figure 4-14. Elevator Balance Weight Modification

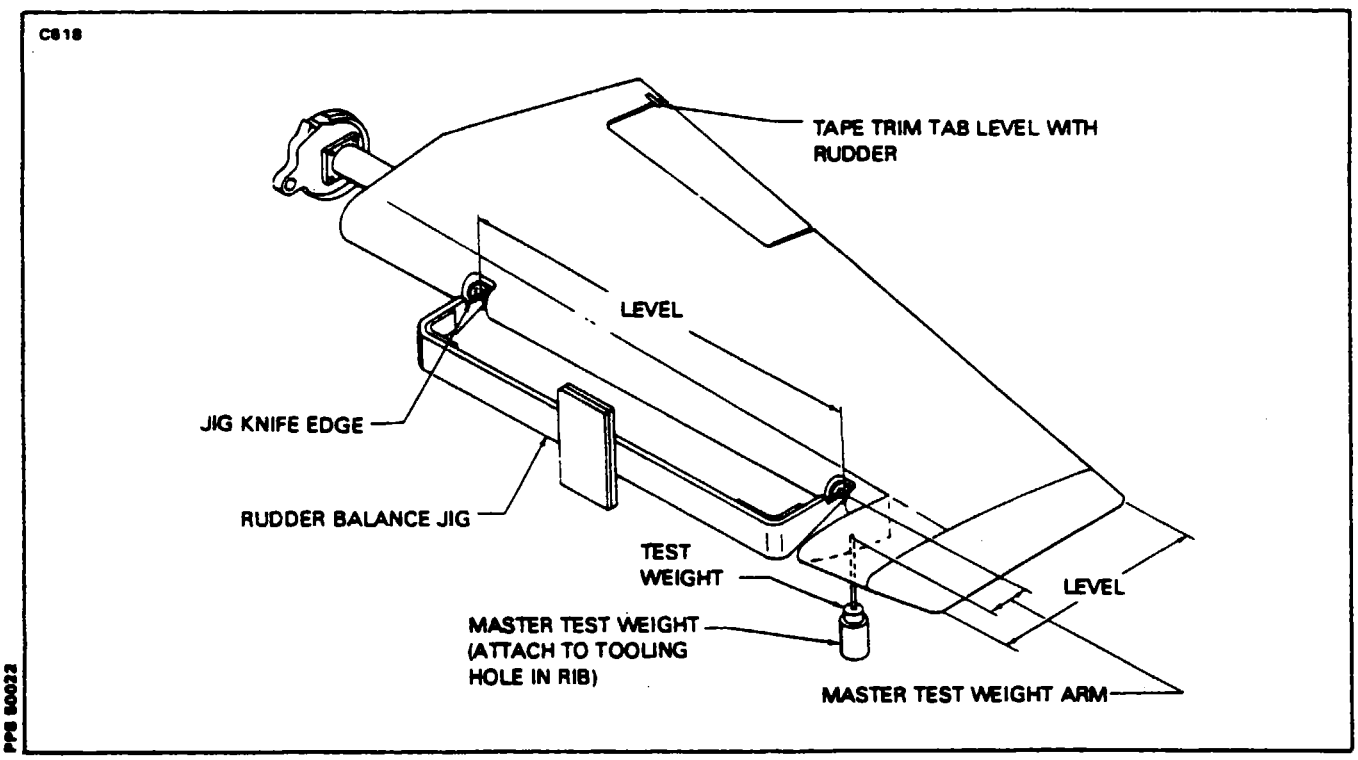

Figure 4-15. Checking Rudder Balance

4-93. AILERON BALANCING PROCEDURE. (Refer to Figure 4-12.)

a. Remove the aileron from the airplane. (Refer to Paragraph 4-10.)
b. Place the aileron on the balancing jig as illustrated in Figure 4-12. Establish a horizontal reference mark which aligns with the trailing edge of the aileron when it is held in a horizontally level position (chord line level).
c. Ascertain that the surface rotates freely with no binding at the knife edges.
d. Fabricate a master test weight. (Refer to the appropriate Table (IV-I thru IV-IV) on Control Surface Balancing for specific weight.)
e. Hang the master test weight on the forward attachment bolt of the balance weight.
f. If the aileron balances with the master test weight installed, it is at the minimum static balance limit and is satisfactory.
g. If the aileron is leading edge heavy with the master test weight installed, material must be removed from the surface balance weight until a balanced condition is obtained. This would also result in the lower static balance limit.
h. If the aileron is trailing edge heavy with the master test weight installed, it must be determined that the aileron does not exceed the upper static limits. (Refer to the appropriate Table on Control Surface Balancing for static limits.) The following instructions should be used to determine the extent of unbalance:
   1. Add individual 0.1 pound test weights to the master test weight until the aileron balances.
   2. If the number of 0.1 pound test weights does not exceed the maximum allowable, the aileron is within the static limits and is satisfactory. (Refer to the appropriate Table on Control Surface Balancing for maximum weight.)
   3. If the number of 0.1 pound test weights added to the master test weight to balance the aileron exceeds the maximum allowable per the appropriate Table, the aileron balance exceeds the static limits allowable. The reason for the excessive unbalance must be determined; the unbalance must be corrected and the aileron re-checked.
i. With the balance check complete, install the assembly on the aircraft. (Refer to Paragraph 4-11.)

4-94. ELEVATOR BALANCING PROCEDURE. (Refer to Figures 4-13 and 4-14.)

a. Remove the complete (both halves) elevator assembly from the airplane. (Refer to Paragraph 4-23.) The complete assembly including trim tabs, actuating rods and center balance weight must be assembled and placed on the balancing jig.
b. Fabricate a master test weight. (Refer to the appropriate Table on Control Surface Balancing for specific weight.)
c. With the elevators assembled and mounted in the jig, establish a horizontal reference mark which aligns with the trailing edge of the elevator when held in a level position (chord line level). Ascertain that the assembly rotates freely with no binding at knife edges.
d. Loosen one top forward elevator tip attachment screw and hang the master test weight over the leading edge.
e. If the elevators balance in neutral position with just the master test weight installed, the surface is at the minimum static limit, and is satisfactory.
f. If the elevator is leading edge heavy with the master test weight installed, the elevator tip balance weights may be decreased in weight by removing lead from their outboard surfaces to a minimum tip weight of 3.50 pounds each, or as required to obtain a balanced condition. Remove equal amounts from both tip weights simultaneously.
g. If the surface is still leading edge heavy with the tip weights reduced to 3.50 pounds and the master test weight installed, the cause of the excessive unbalance must be determined and corrected, and the balancing procedure repeated.
h. If the assembly is trailing edge heavy with the master test weight installed, 0.1 pound test weights may be added to the master test weight. Additional 0.1 pound test weights may be added to the master test weight, but do not exceed the maximum allowed. (Refer to the appropriate Table on Control Surface Balancing for maximum allowable weight.)

i. If the assembly is still trailing edge heavy, add trim weights to obtain a balanced condition. (Refer to the appropriate Table on Control Surface Balancing for trim weight part number and amount allowable.) Divide trim weights equally and attach them to the outboard side of each tip weight.

j. If the elevator is still trailing edge heavy with the maximum number of trim weights installed, check the elevator balance weight arm assembly P/N 51399 to see if it has additional plates welded to the main balance weight. Elevators with Serial Nos. 31T-7400002 to 31T-7720022 inclusive may be modified to include the additional plates on the main balance weight if required. Refer to Figure 4-14, for fabrication and installation instructions.

4-95. RUDDER BALANCING PROCEDURE. (Refer to Figure 4-15.)

a. Remove the rudder from the airplane. (Refer to Paragraph 4-32.)

b. Place the rudder horizontally on the balance jig.

c. Fabricate a master test weight. (Refer to the appropriate Table on Control Surface Balancing for specific weight.)

d. Hang the master test weight in the existing tool hole in the rudder counterbalance channel. Ascertain that the tool hole is located to provide the proper master test weight arm as specified in the appropriate Tables on Control Surface Balancing.

e. If the rudder balances with just the specified master test weight, the surface is at the minimum static limits per the appropriate Table on Control Surface Balancing and is satisfactory.

f. If the rudder is leading edge heavy with the master test weight installed, material must be removed from the surface balance weight until a balanced condition is obtained. This would also result in the lower static limit.

g. If the rudder is trailing edge heavy with the master test weight installed, it must be determined that the rudder does not exceed the maximum static limits. (Refer to the appropriate Table on Control Surface Balancing for static limits.) The following instructions will determine the extent of unbalance:

1. Add individual 0.1 pound test weights to the master test weight until the rudder balances.

2. If the number of 0.1 pound test weights added does not exceed the maximum allowable, the rudder is within the static limits. (Refer to the appropriate Table on Control Surface Balancing for maximum weight.)

3. If the number of 0.1 pound test weights added to the master test weight to balance the rudder exceeds the maximum allowable per the appropriate Table, the rudder balance exceeds the static limits and trim weights must be added to the rudder to produce a balanced condition. (Refer to the appropriate Table on Control Surface Balancing for the trim weight part number and the maximum amount allowed to balance the rudder.)

NOTE

During this procedure, the master test weight must carry no more than the maximum number of 0.1 pound test weights as called out in the appropriate Table on Control Surface Balancing.

h. If trim weights are required, remove the rudder tip and install the trim weights on the attachment point located in the web of the upper rib. Use AN3-A bolt with the length depending on the amount of trim weights used. (Refer to the appropriate Table on Control Surfacing Balancing for maximum number of trim weights allowed.)

i. Install rudder tip and secure with attaching screws, and recheck rudder balance.

j. With balance check completed, install the rudder assembly on the aircraft. (Refer to Paragraph 4-33.)

4-96. ELEVATOR CONTROL SYSTEM FRICTION MEASUREMENT. (Refer to Figure 4-16.) The complete elevator system (including Autopilot if installed) must be rigged to its proper travels and cable tensions prior to determining the friction in the system. (Refer to Section V, Table V-I, and Paragraphs 5-23 and 5-31.)

"TOTAL FRICTION" in the PA-31T elevator control system shall not be in the excess of 10 pounds on earlier models and 11 pounds on models with serial numbers 31T-7920053, 31T-8020001 and up, with the arm on SAS actuator full down and elevator in neutral position. On the PA-31T1 only, adjust the turnbuckle to obtain 43 ± 1 pounds tension and on the PA-31T2 only, 48 ± 1 pounds tension on the elevator control spring, with elevator in neutral position. "TOTAL FRICTION" in the PA-31T1 and PA-31T2 elevator control system shall not exceed 11 pounds. Determine the actual friction in the system by using the following procedure:

a. Attach a spring scale to the inboard trailing edge of the elevator, outboard of the tab.

b. With the spring scale attached, position the elevator trailing edge down approximately 2 inches from the neutral position.

c. Record the force (see Step g.) required to raise the elevator through the neutral position until the trailing edge is approximately 2 inches above neutral.

d. Record the restraining force lowering the elevator from the 2 inches up position thru the neutral position to the original 2 inches down position.

e. Repeat the above raising and lowering processes until average forces are obtained.

f. The total friction is obtained by subtracting the two forces.

NOTE

Do not exceed 60 pounds force for any measurement.

g. The elevator shall be rotated with a steady movement and the force reading taken when the elevator is passing thru the neutral position. Do not stop rotation when taking reading.

4-97. CHECKING ELEVATOR TRIM TAB FREE PLAY. In accordance with the latest revision of Piper Service Bulletin No. 468, check the elevator trim tab for excessive play. Pay particular attention to wear or looseness at each tab hinge pivot point, the push-pull attachments and trim tab screw assembly.

a. Position the trim tab so that the trailing edge of the tab is 0.50 ± .12 of an inch below the trailing edge of the elevator.

b. With tab positioned per (a), the total "Free Play" must not exceed .06 of an inch as measured between the outboard end of the tab trailing edge and the trailing edge of the elevator.

c. If excessive play is found, inspect the elevator trim screw and hinge assemblies to determine the location of excessive play. Repair or replace the worn parts as required.

4-97a. CHECKING AILERON TRIM TAB FREE PLAY.

a. Aileron trim tab free play:

1. Position the aileron and aileron trim tab in neutral position.

2. With surfaces positioned per (1), the total trim tab "Free Play" must not exceed .045 of an inch as measured between the inboard end of the tab and the trailing edge of the flap.

3. If excessive play is found inspect the aileron trim screw and hinge assemblies to determine the location of excessive play. Repair or replace the worn parts as required.

4-97b. CHECKING RUDDER TRIM TAB FREE PLAY.

a. Position the rudder and rudder trim tab in neutral position.

b. With surfaces position per (a), the total trim tab "Free Play" must not exceed .07 of an inch as measured between the bottom end of the tab and the trailing edge of the rudder.

THIS SPACE INTENTIONALLY LEFT BLANK

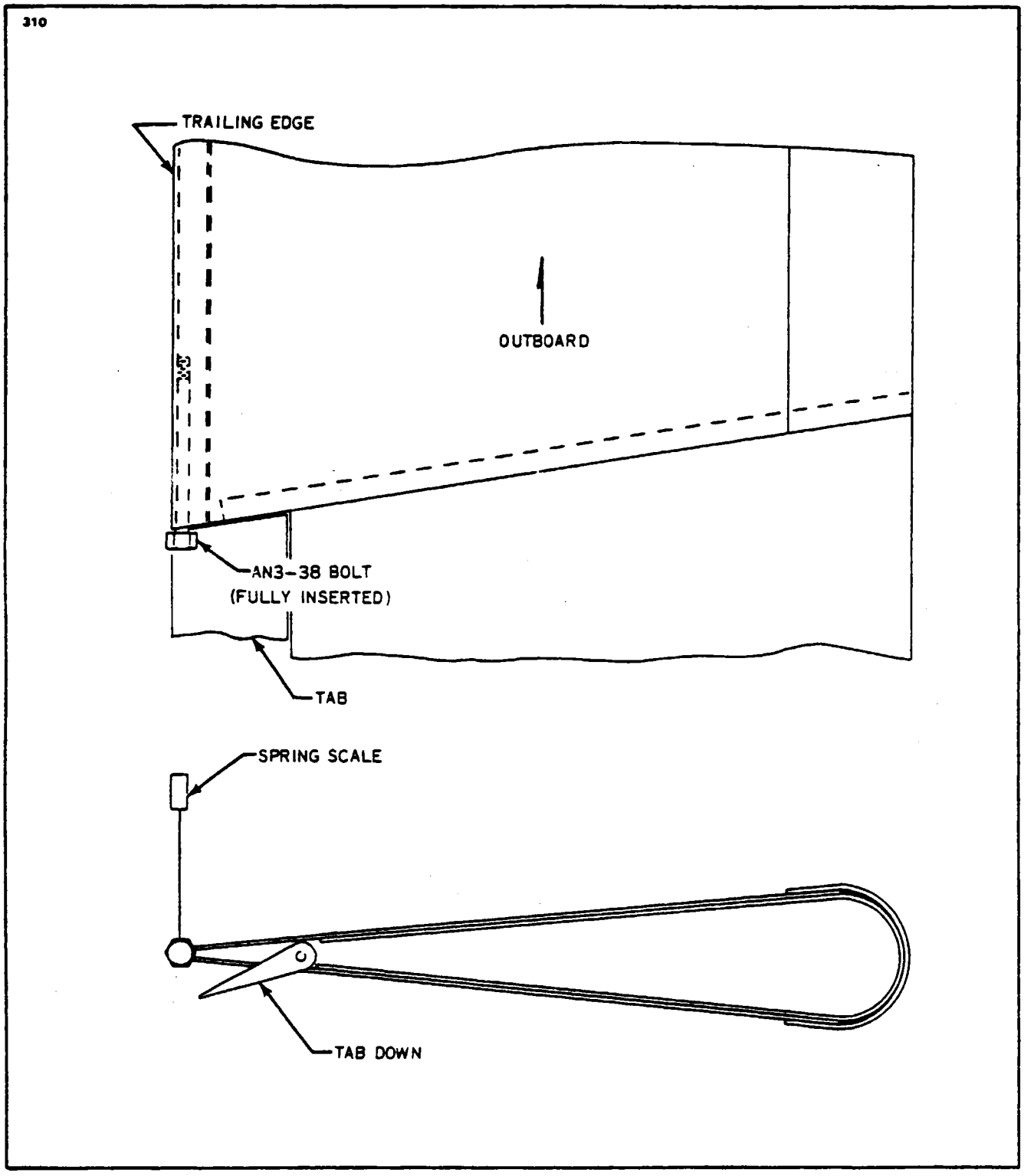

Figure 4-16. Elevator Friction Measurement

4-98. STRUCTURAL REPAIRS. Structural repair methods used may be made in accordance with the regulations set forth in FAA Advisory Circular 43.13-1A. To assist in making repairs and/or replacements, Figure 4-17 identifies the type and thickness of the various skin material used. Never make a skin replacement or patch plate from material other than the type and thickness of the original skin. The repair must be as strong as the original skin. However, flexibility must be retained so that the surrounding areas will not receive extra stress.

When making major structural repairs other than using factory manufactured parts, it is recommended the manufacturer be contacted. No major alterations are recommended without contacting the manufacturer.

NOTE

Any time service is accomplished on the elevator control system, a friction check must be made to insure that the system friction is within limits. (Refer to Paragraph 4-96.)

It may be necessary to cut access holes to make skin repairs in some areas of the aircraft. Refer to Figure 4-18 for typical access holes. In pressurized areas all skins, formers, stringers, etc., are considered structural members and should be treated as such. All repair material must be free of any defects such as nicks, scratches, etc., which can cause stress risers. Do not dimple a structural member by driving the rivet head into the part.

Scratches in acrylic plastic windows may be removed by buffing, providing not more than .031 of an inch of material is removed. No crazing or cracks are permitted in the pressure windows.

4-99. FUSELAGE SEALING. (Refer to Figures 4-19 and 4-20.) Special sealing compounds have been used to seal sections of the Piper Cheyenne against leakage of pressurized air. This sealing is done during the course of construction. Any air leakage throughout the pressurized fuselage can normally be detected when carrying out the fuselage pressure check given in Section XIII or Section XIIIA.

THIS SPACE INTENTIONALLY LEFT BLANK

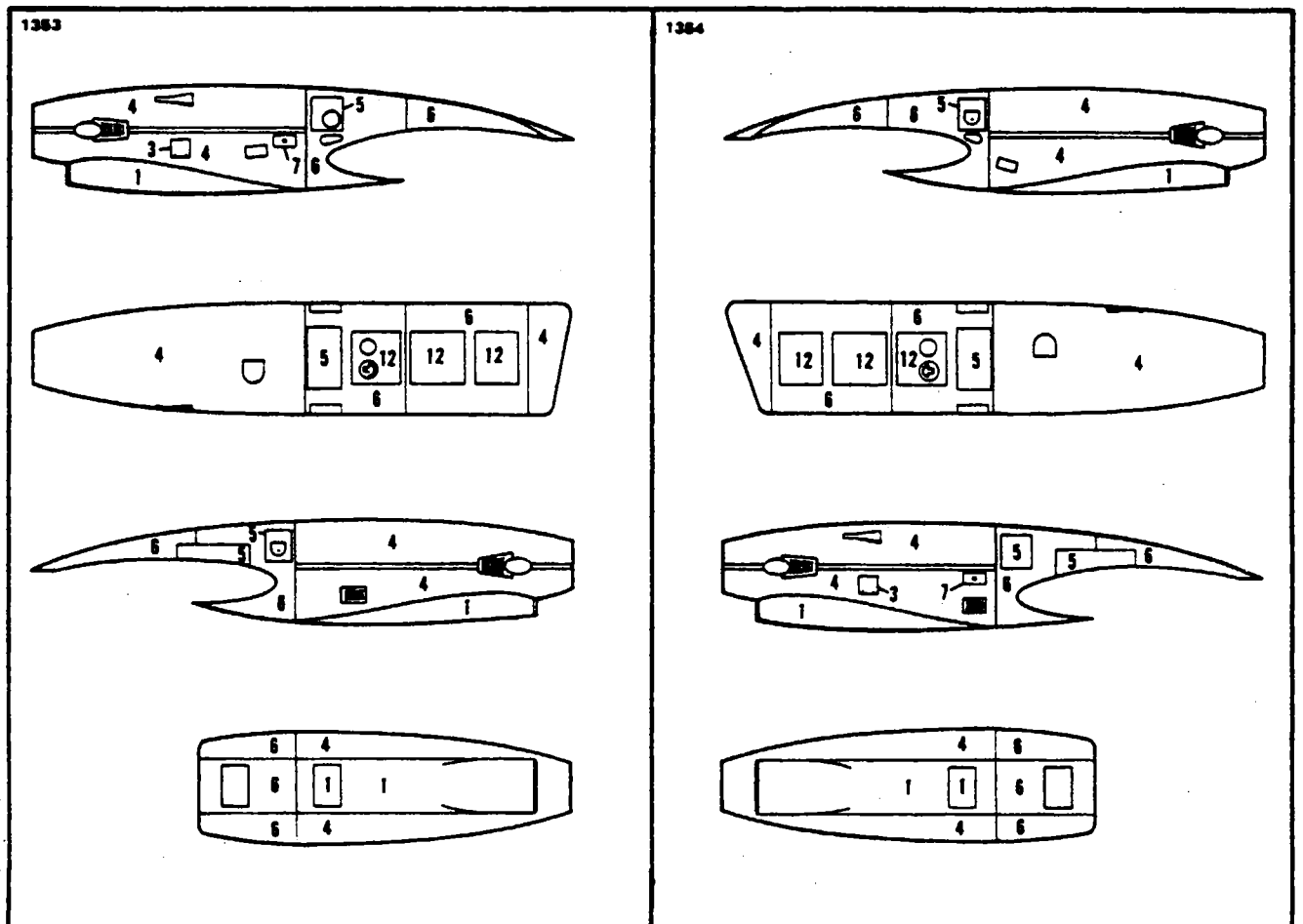

LEFT NACELLE

RIGHT NACELLE

NUMBER	MATERIAL	THICKNESS
1	FIBERGLASS	
2	2024-T3	.020
3	2024-T3	.025
4	2024-0*	.025
5	2024-T3	.032
6	2024-0*	.032

NUMBER	MATERIAL	THICKNESS
7	2024-T3	.040
8	2024-0*	.040
9	2024-T3	.051
10	2024-T3	.064
11	321 ST STL	.015
12	2024-T3	.081

NOTE: LEFT WING SHOWN, RIGHT OPPOSITE AND NOTED MATERIAL OUTLINED IN DOTS USED ON RIGHT WING ONLY. CIRCLED MATERIAL NUMBERS INDICATE LEFT WING ONLY.
*HEAT TREAT TO 2024-T4 AFTER FORMING.

Figure 4-17. Skin Thickness

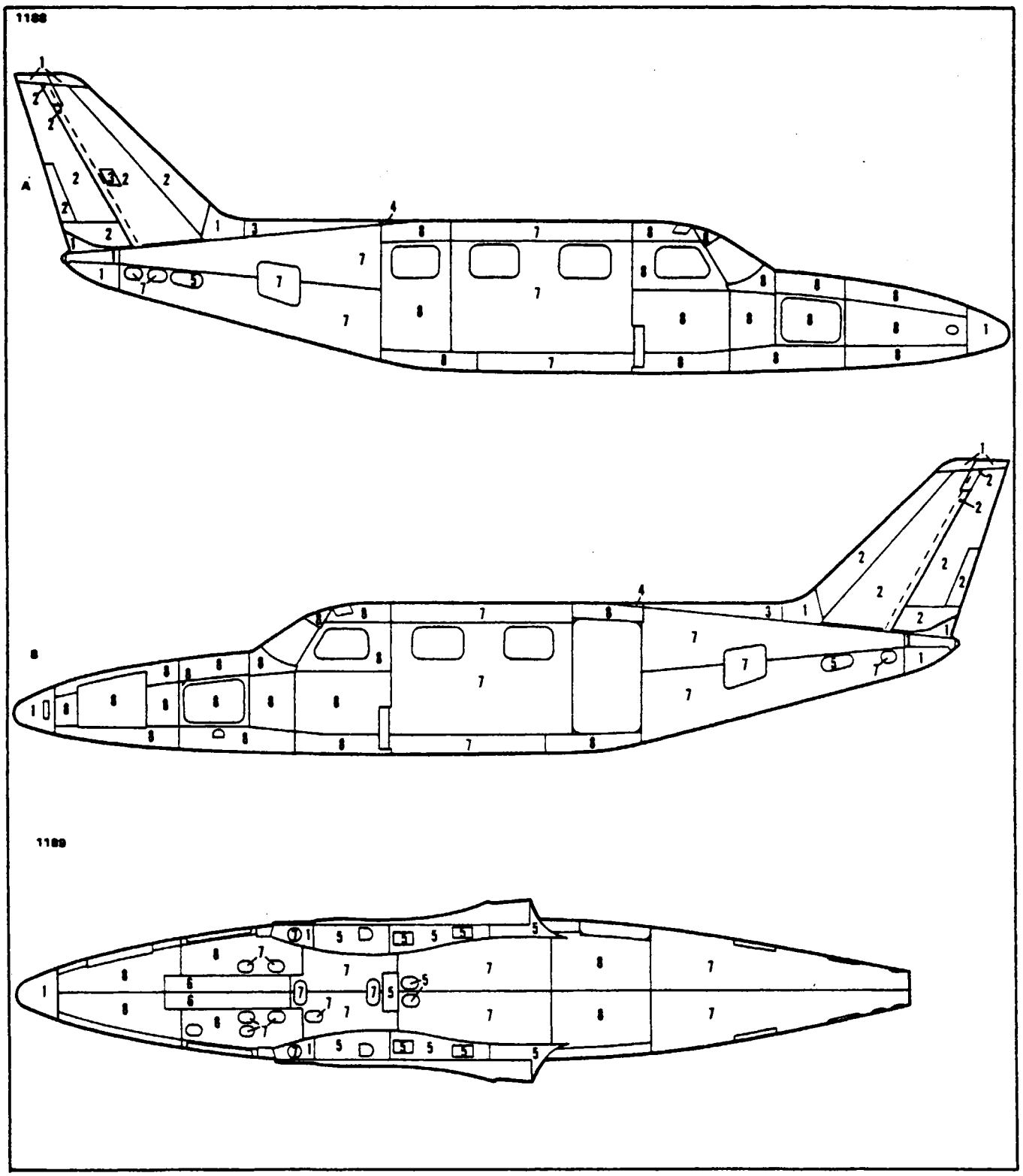

Figure 4-17. Skin Thickness (cont)

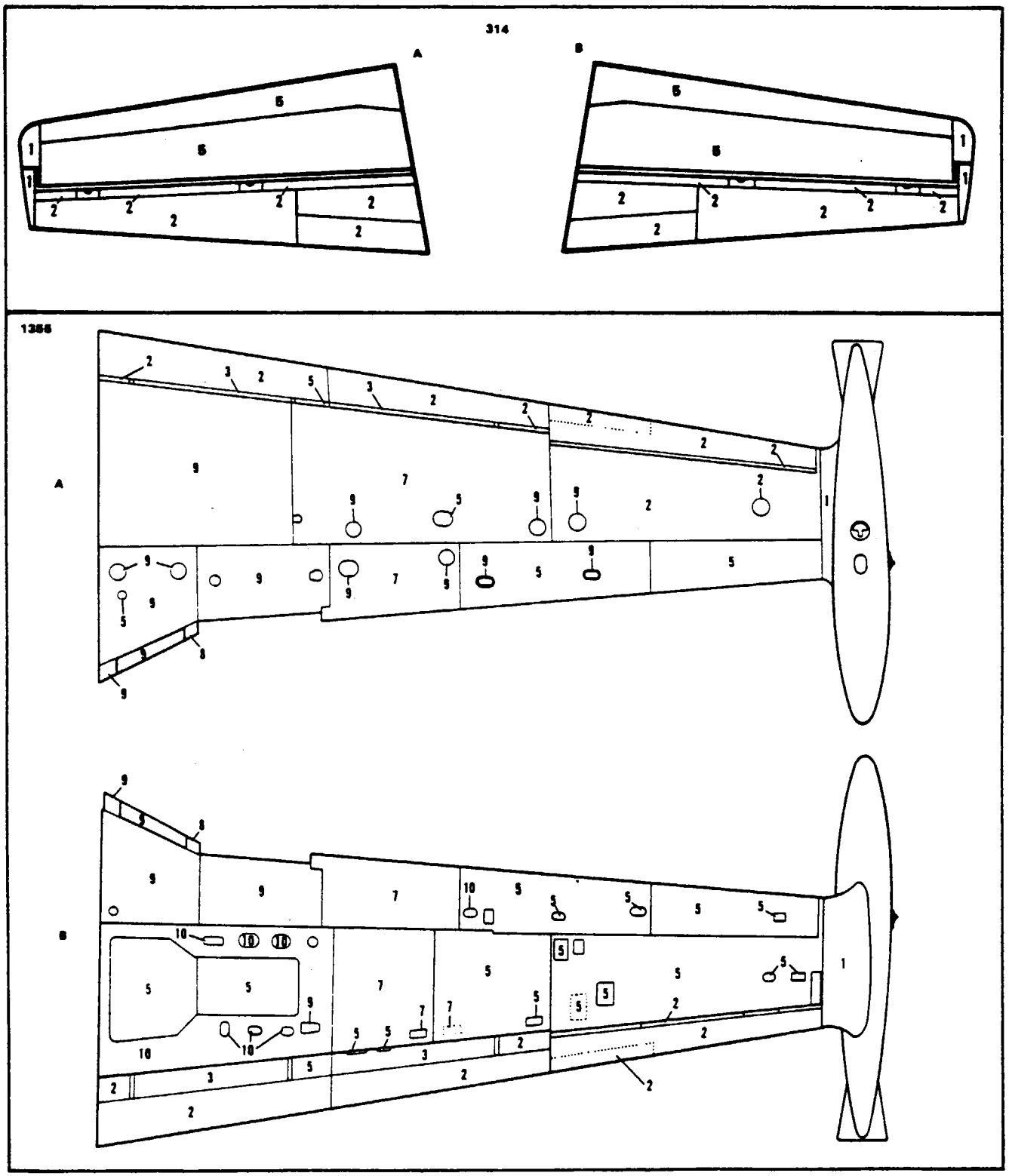

Figure 4-17. Skin Thickness (cont)

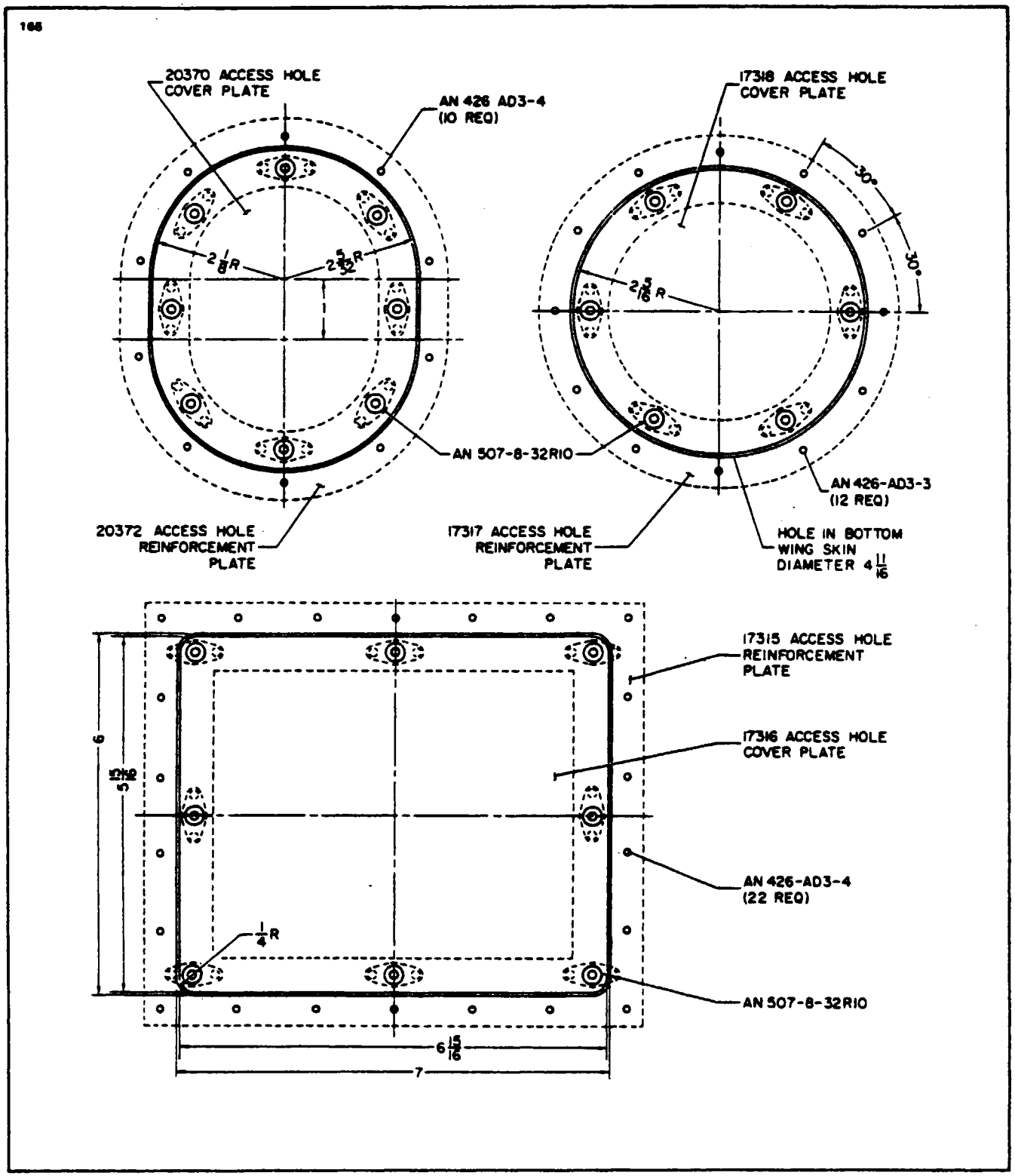

Figure 4-18. Typical Access Holes and Panels

4-100. LIST OF EQUIPMENT.

a. Mixers - Semco No. 285 Portable, or Semco No. 385 Automatic or equivalent. (See Note 1, Paragraph 4-101.)

b. Cartridges - SemKit No. 650 2-1/2 ounces and 6 ounces proportioned with MIL-S-7502 Class B sealants only. (See Note 1, Paragraph 4-101.)

c. Half pint kits of MIL-S-7502 Class A sealants only (5 fluid ounces). (See Note 1, Paragraph 4-101.)

d. Air powered sealant gun (Semco No. 250-6 with extra retainers for 2-1/2 ounce cartridges or equivalents). (See Note 1, Paragraph 4-101.)

e. Assorted nozzles for sealant gun. (See Note 1, Paragraph 4-101.)

f. Extension for sealant gun. (See Note 1, Paragraph 4-101.)

g. Solvent dispensers (polyethylene squirt bottles).

h. Clean white cotton cloths.

i. Stiff bristle brush (not nylon).

j. Solvent containers with covers for cleaning nozzles, tools, etc.

k. Fillet fairing tools. (Refer to Figure 4-28.)

4-101. LIST OF MATERIALS. Only the following materials should be used:

a. Sealants - MIL-S-7502 - Classes A-1/2, A-2, B-2, B-4, B-6 and B-8. (See Note 1.)

b. Sealant material - 3M - E.C. 612. (See Note 2.)

c. Sealant material - G.E.-SS-4004 Primer. (See Note 3.)

d. Sealant material - G.E. RTV 88 with RTV 9811 catalysts. (See Note 3.)

e. Aluminum Wool - Fine.

f. Release Agent - Polyvinyl Alcohol (P.V.A.).

g. Cleaning Solvents - Methylethylketone (MEK) or Aliphatic Naphtha.

The equipment and materials listed in Paragraphs 4-100 and 4-101 are commercially available from the vendors as shown in the following Notes:

Note 1: H.S. Bancroft Corporation
2 Rockhill Ind. Park
Cherry Hill, New Jersey 08034

Note 2: 3M Company
Industrial Specialities Division
220-7E-01 3M Center
St. Paul, Minnesota 55144

Note 3: General Electric
Silicone Products Div. Sect. TR75
Waterford, New York 12188

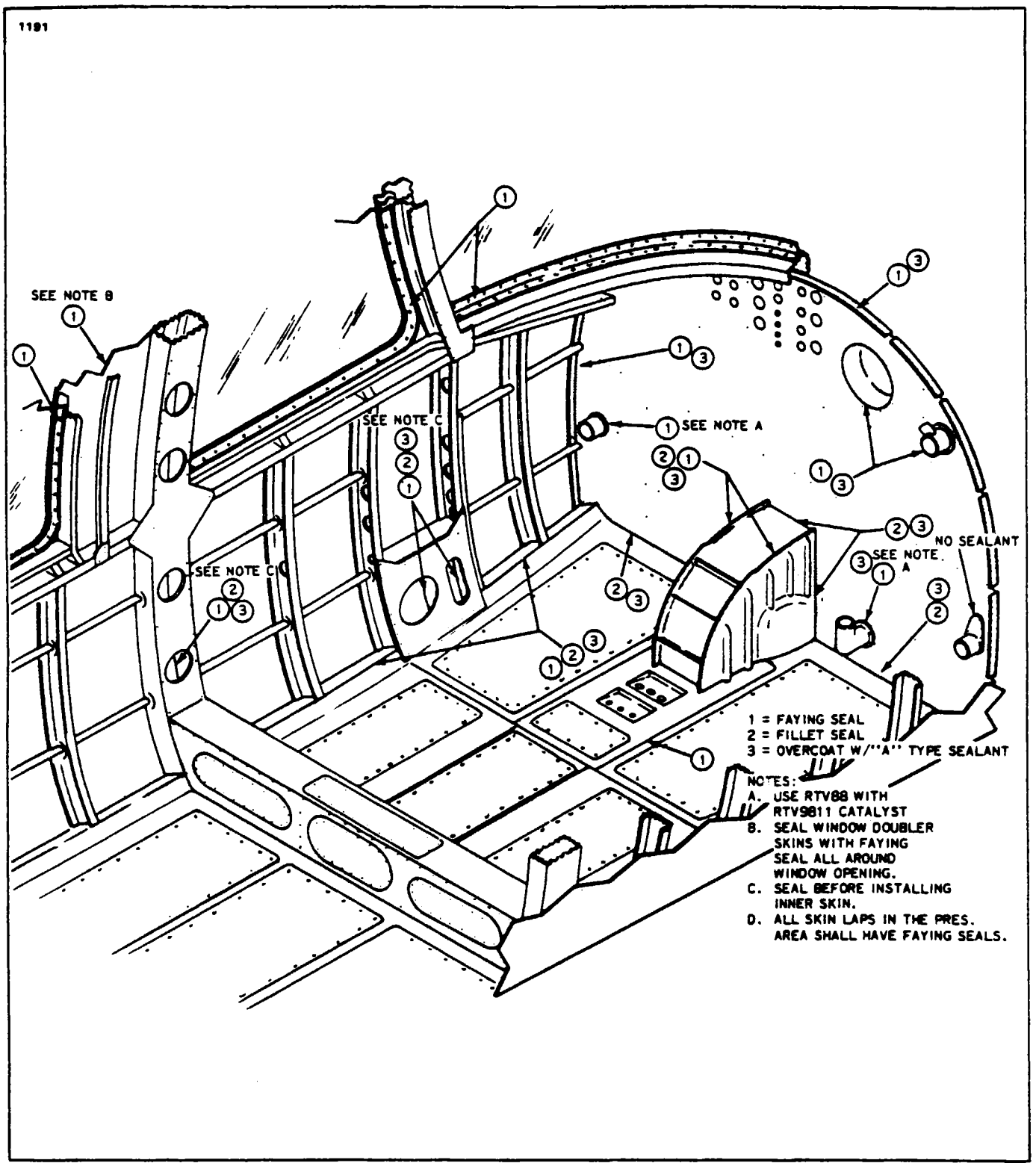

Figure 4-19. Fuselage Sealing (Forward)

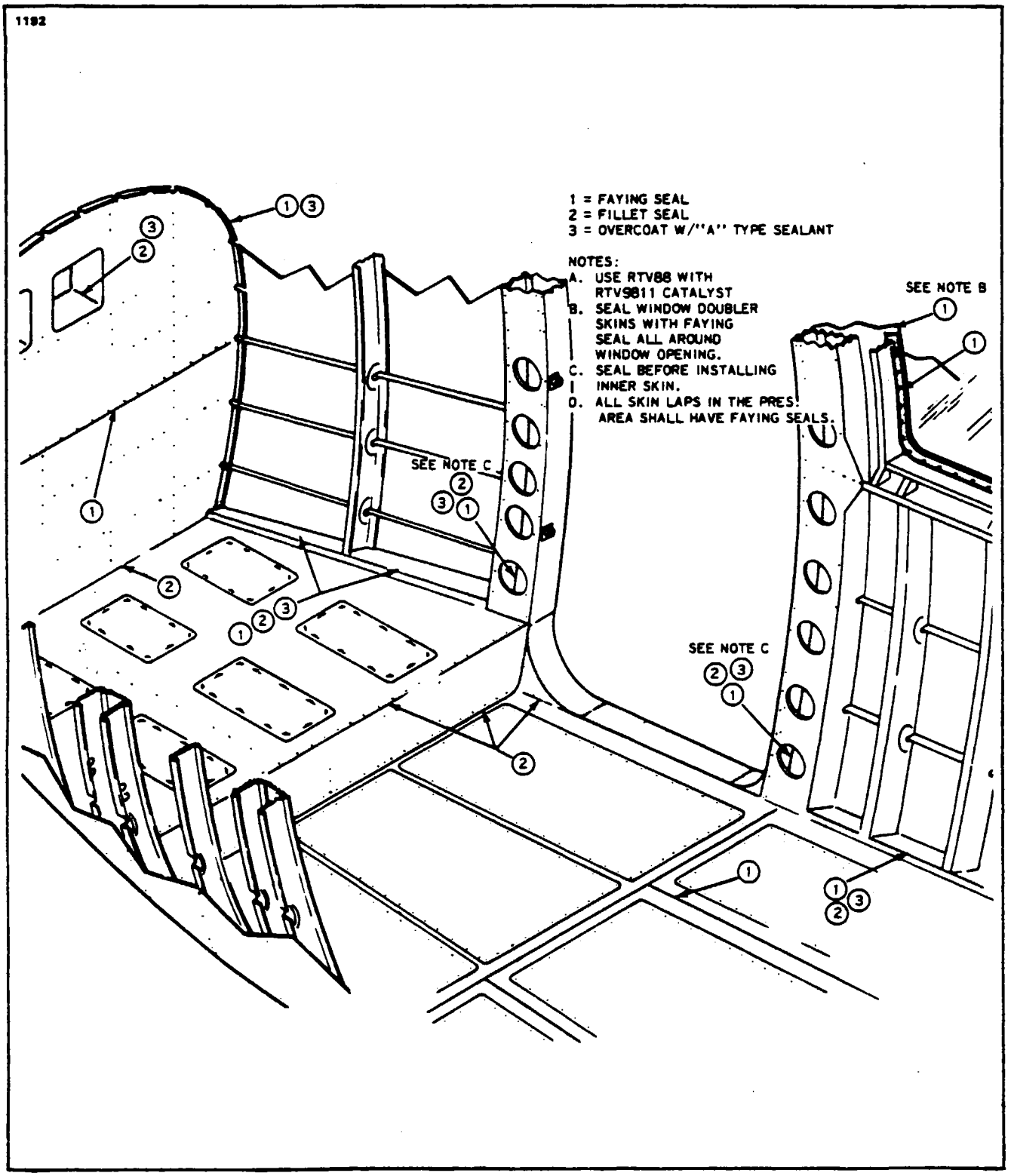

Figure 4-20. Fuselage Sealing, (Aft)

4-102. SURFACE PREPARATION. All parts which must be sealed should be thoroughly cleaned. Methylethylketone (MEK) or Aliphatic Naphtha are recommended cleaning agents.

NOTE

Aliphatic Naphtha is preferable since it will not damage painted surfaces or acrylic plastic (Plexiglas) windows.

a. All parts, sub-assemblies, and assemblies to be sealed shall be alodined and primed with zinc-chromate, except pressurized air duct work, airboxes, etc., which shall be alodined only.

b. Remove all filings, chips, loose dirt, and other foreign objects on the surfaces to be sealed by forced air or vacuum cleaning and brush.

c. Clean all surfaces or voids to be sealed, to remove all fingerprints, oil or grease. To clean, wipe the affected areas with naphtha, using a clean cotton cloth. The cleaned surfaces should be wiped dry immediately and not allowed to air dry.

CAUTION

When using these cleaning solvents in a closed area, forced ventilation must be used to protect personnel from toxic fumes.

d. It is essential that clean cloths be used for cleaning. When a cloth becomes soiled, it should be discarded. To avoid contamination of the cleaning solvent, it should be poured on the cloth. Repeat the cleaning procedures above until it is certain no contaminates are left on the surfaces to be sealed.

NOTE

The importance of proper cleaning prior or applying sealant cannot be over emphasized. Sealant will not adhere properly to a dirty, oily surface. The entire purpose of the sealant is defeated if it lifts from the structure after it has been applied.

4-103. MATERIAL PREPARATION. The instructions of the sealant manufacturer should be followed exactly with regard to both the mixing and storage of the sealants.

Mix only enough sealant to accomplish the work at hand. The application life of the A-2 and B-2 class sealants is two hours at 75 degrees Fahrenheit and 50 percent relative humidity. For every 10 degrees temperature rise, the application life is reduced by half, and for every 10 degrees drop in temperature the application life is doubled. Increased humidity decreases application life and decreased humidity increases application life.

The application life of A-1/2 class sealant is one-half hour under the same 75 degrees Fahrenheit and 50 percent relative humidity.

NOTE

Use care when mixing sealant to avoid incorporating air into the sealant.

4-104. APPLICATION OF SEALANTS. The following sequence of sealing should be observed:

a. Seal faying surfaces of assemblies and sub-assemblies prior to assembly which are not accessible later.
b. Seal joggles, holes, cutout and any other gaps.
c. Seal remaining seams and joints.
d. Seal bolts, screws, nuts and other fasteners.
e. Seal electrical harness.
f. Seal formed-in place gaskets.

NOTE

All sealing is done on the pressure side of the seal plane. This assures that the pressure will help hold the seal in place.

4-105. SEALING FAYING SURFACES. (Refer to Figure 4-21.) Typcial parts requiring sealing prior to assembly are bulkhead assemblies that extend above and below the seal plane between bulkhead stations 81 and 274 inclusive, for the PA-31T and PA-31T1 and between bulkhead stations 57 and 274 inclusive, for the PA-31T2, floorboard or floorboard support channels, angles and skin joints behind box bulkheads and windshields and windows. Type B-2 class sealant should be used. Apply a liberal amount of sealant to each mating surface of the applicable parts. Assemble and secure the components together before the sealant dries.

NOTE

Sufficient sealant should be applied to insure a continuous extrusion on both sides of the joint after assembly of the faying surface. (Refer to Figure 4-21.)

Allow class B-2 sealant to fully cure for 48 hours at 75°F and 50% relative humidity.

4-106. SEALING JOGGLES. (Refer to Figure 4-22.) Joggles should be sealed by completely filling them with class B-2 sealant. The sealant should be applied by the use of a pressure applicator, forcing the sealant under the joggle from either side until it begins to extrude on the opposite side of the joggle.

4-107. SEALING HOLES AND VOIDS. (Refer to Figure 4-23.) Voids are defined as gaps between airframe members which present a direct opening through the pressure vessel structure. Such gaps occur at stringer cutouts in the pressure bulkheads, forming reliefs and flanges. Holes and voids which are less than .125 wide should be filled with sealant and building up a bead with a minimum thickness of .062. If the gap is larger than .125 wide, it must have a mechanical closure such as a soft rivet or screw and washer, or may be packed with 3M-EC-612 putty type sealant to form a base for the sealant.

4-108. HOLES AND VOIDS IN COLD AIR DUCT WORK. (Refer to Figure 4-23.) Sealing in this area is done to prevent air noises and eliminate undesirable, uncontrollable drafts. Apply sealant to any holes and voids less than .125 inch wide, and apply 3M #471 plastic tape on inside or outside surface of any holes and voids larger than .125 inch.

4-109. SEALING SEAMS AND JOINTS. (Refer to Figure 4-24.) Fillet seals should be used along the edges of all structures riveted to the skin in the pressurized area, such as frames, stringers, doublers, laps seams and joints. The sealant is applied with a pressure gun and care is taken to avoid getting any gaps or bridges along the seam joint. The final dimensions of a cross section of the bead must conform to those shown in Figure 4-24.

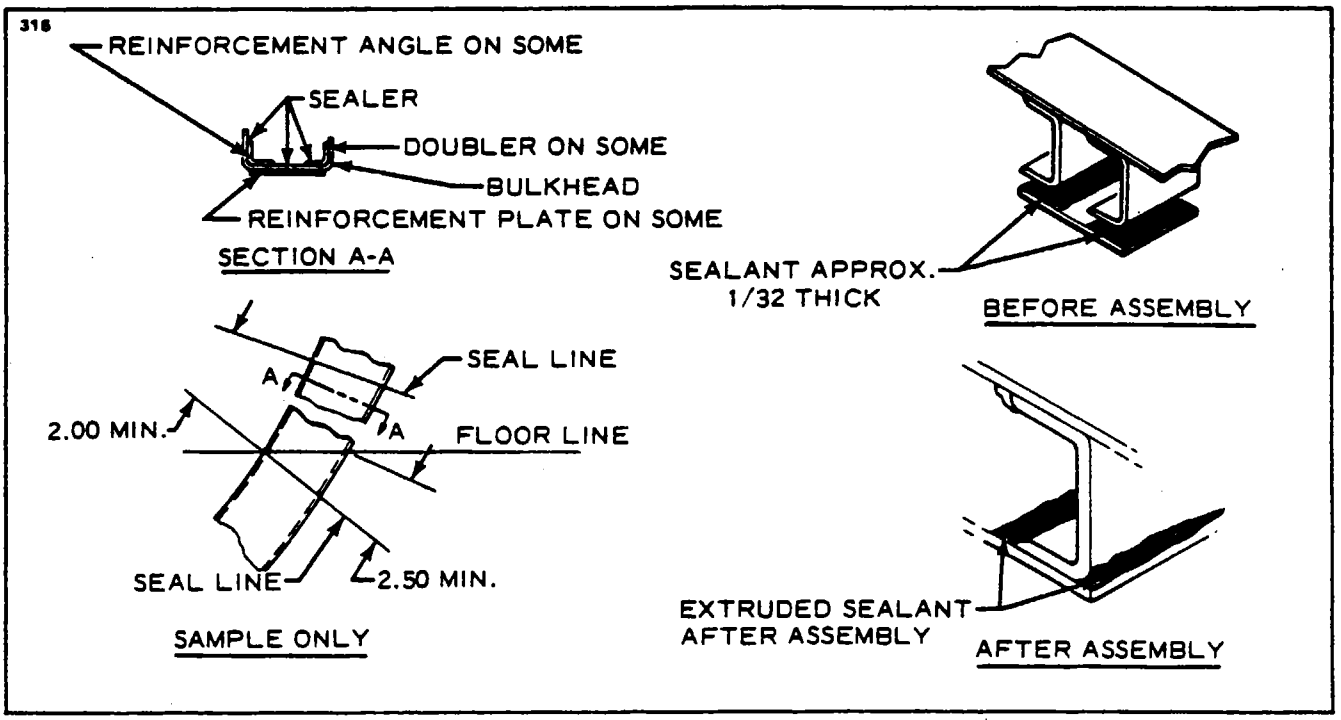

Figure 4-21. Faying Surface Seal

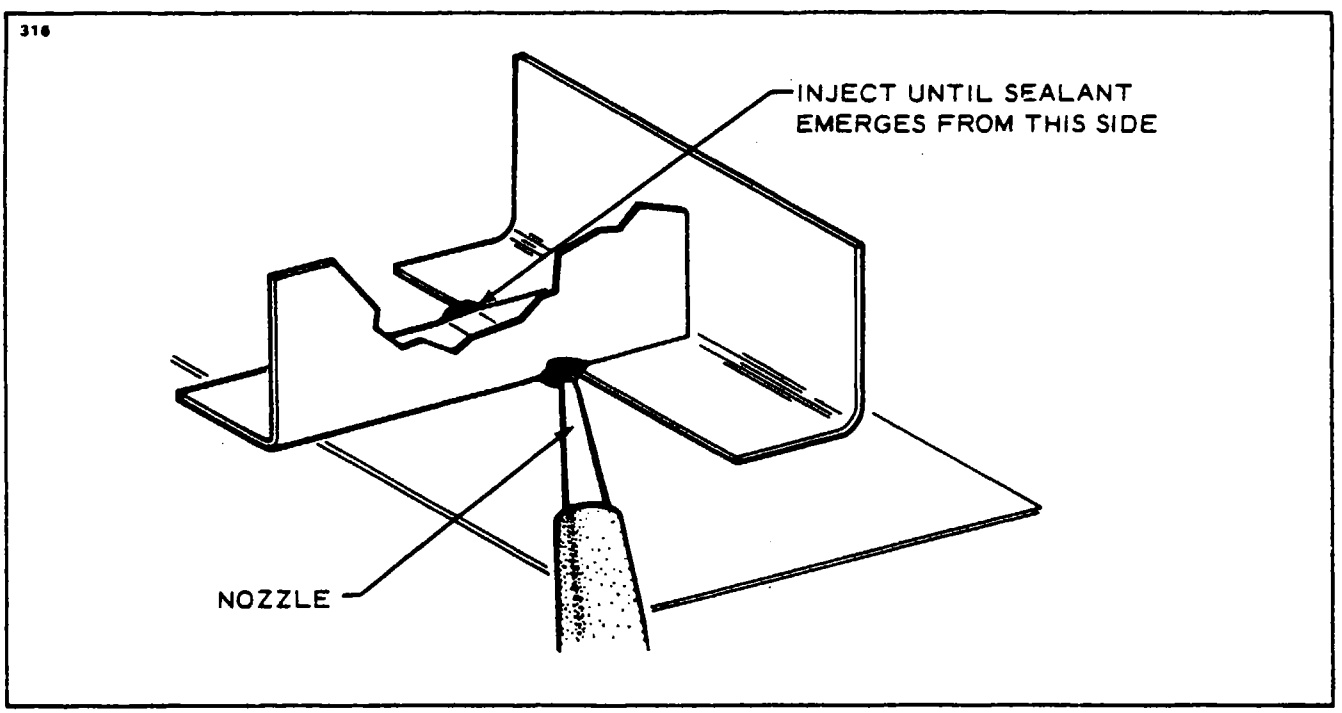

Figure 4-22. Joggle Seal

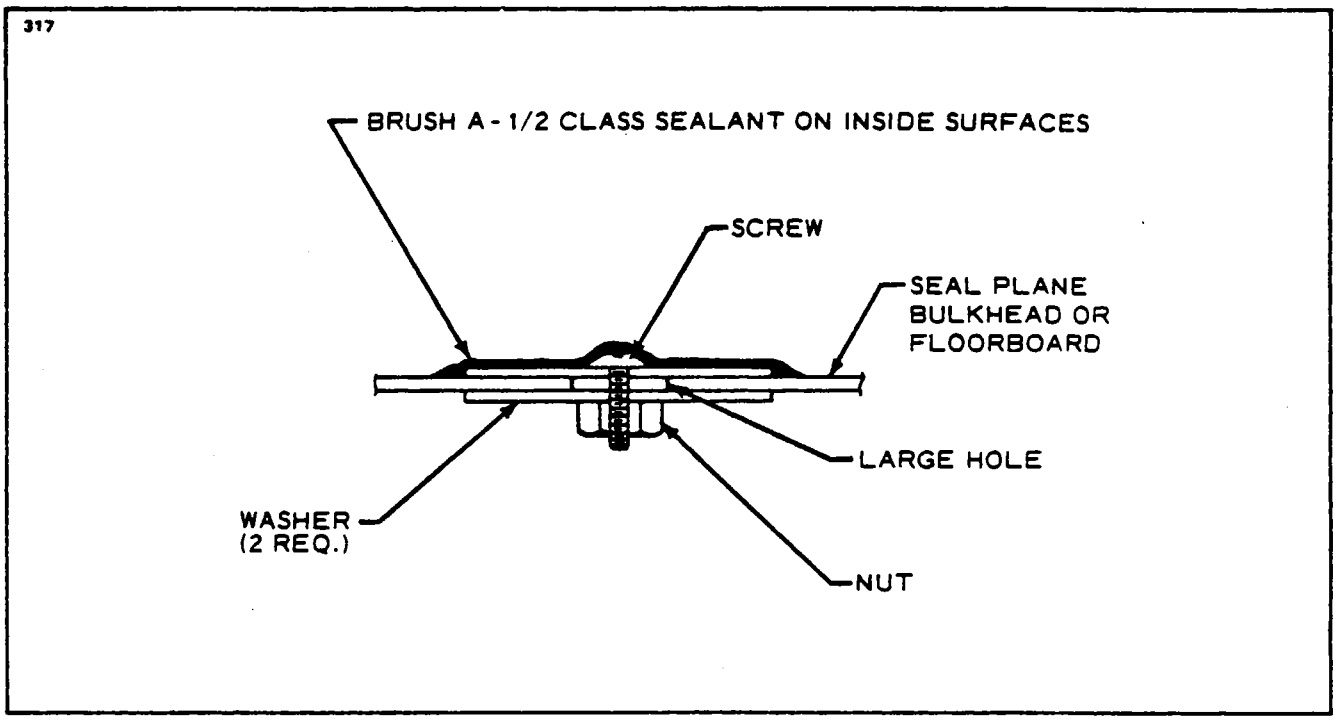

Figure 4-23. Holes and Voids Seals

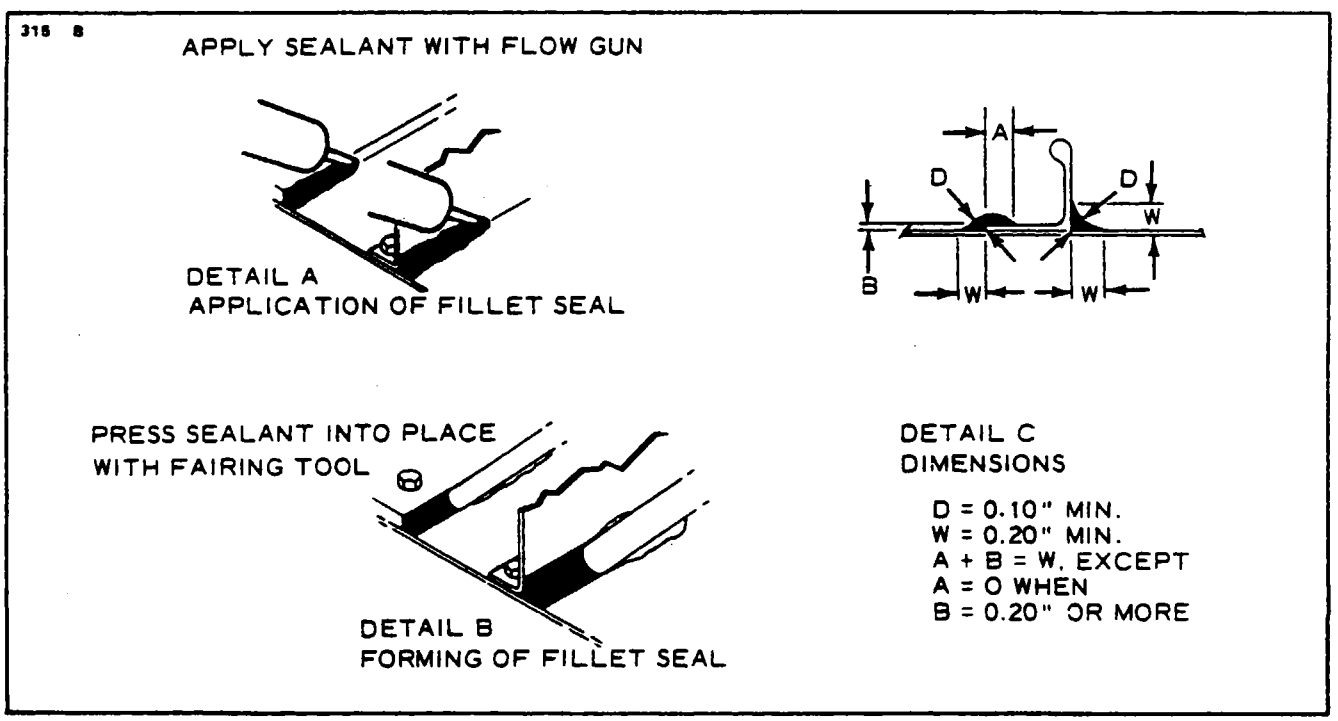

Figure 4-24. Fillet Seal

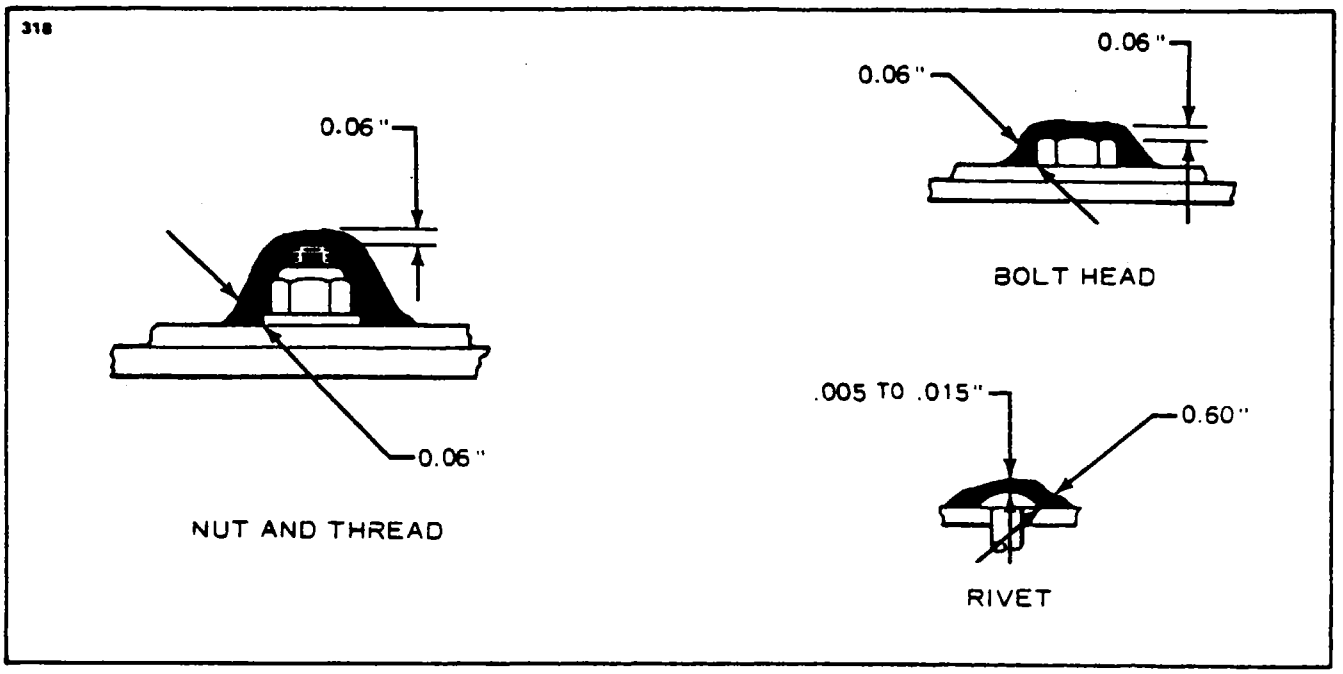

Figure 4-25. Bolts and Rivets Seals

CAUTION

Be sure the pressure gun has enough sealant to make a complete seal at one injection without any break, as stopping and starting will cause air bubbles in seal and cause a poor seal job.

4-110. SEALING FASTENERS. (Refer to Figure 4-25.) Seal all fasteners installed through a seal plane by filleting around the fasteners after installation with a coat of B-2 class sealant.

NOTE

If a bolt or nut is being sealed, it should be torqued before sealants set. Tightening after sealant sets is not recommended.

4-111. SEALING - AN - STANDARD BULKHEAD FITTINGS. Seal AN fittings passing through the pressure plain of the bulkhead by cleaning around the seal area and applying sealant to the inside surface around the hole and installing the fitting before the sealant sets.

4-112. SEALING ELECTRICAL HARNESS. (Refer to Figure 4-26.) These steps are for the main fuselage and wing harness only. The wire harnesses are sealed at the point where they pass through the pressure bulkhead.

a. Clean the area of the bulkhead where the seal fittings will seal.
b. Pass the wire bundle through the hole provided in the bulkhead.
c. Place the seal fitting halves around the wire harness, on the pressure side of the bulkhead.
d. Fill the groove in the mounting flange of the fitting halves with sealant. (Refer to detail "A" of Figure 4-26.)

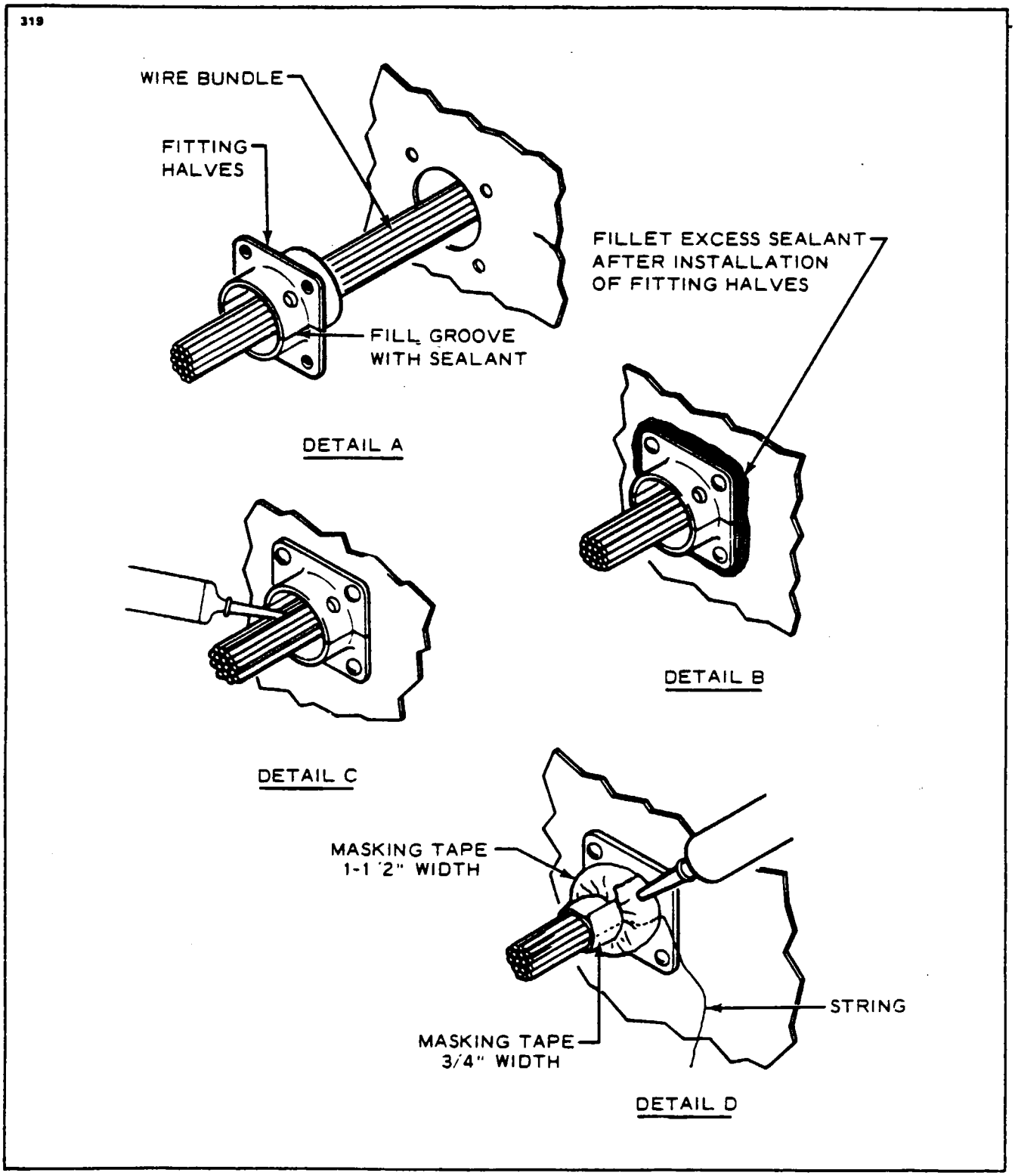

Figure 4-26. Wire Harness Seals

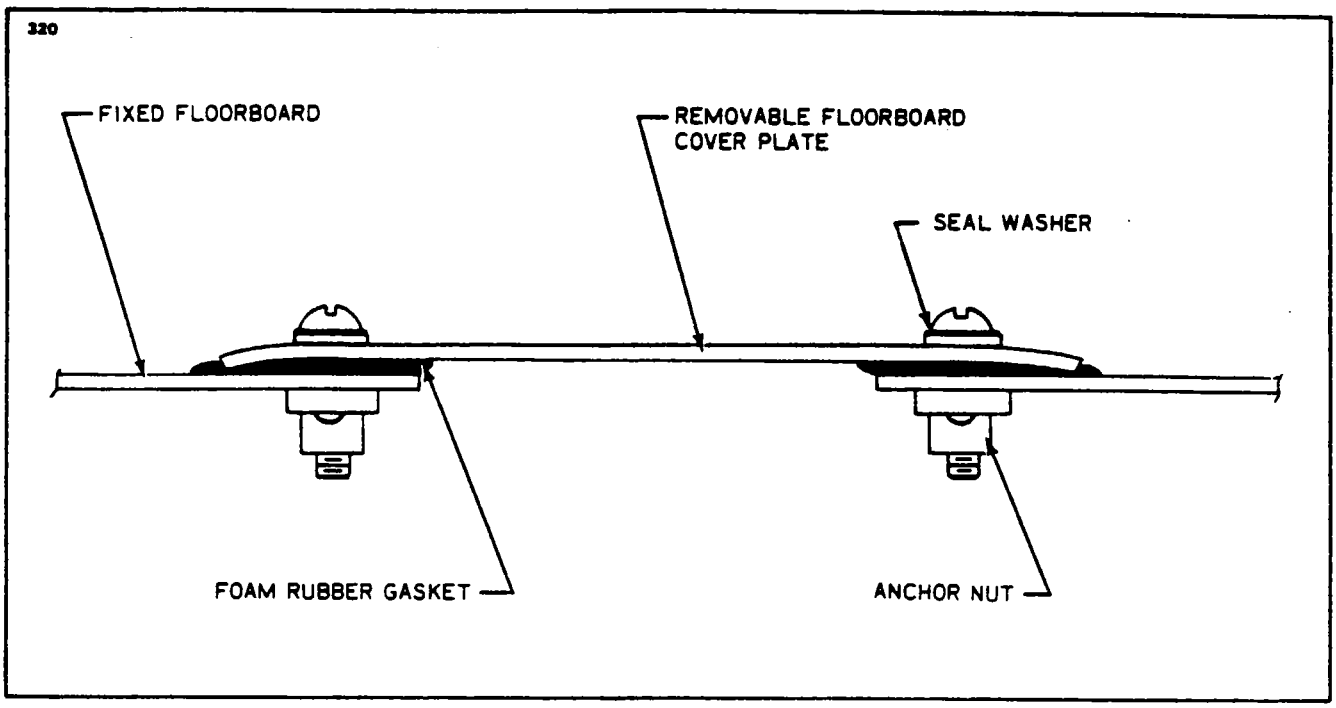

Figure 4-27. Floor Board Seals

NOTE

Use enough sealant to assure that sealant extrudes around the mounting flange after they are secured to the bulkhead.

e. Secure the fitting to the bulkhead with fasteners.

f. Fillet seal the extruded sealant around the sides of the mounting flange as shown in detail "B" of Figure 4-26.

g. Put the nozzle of the sealant gun in the center of the wire harness and work sealant throughout the wires inside the seal fitting as shown in detail "C" of Figure 4-26.

h. Place a strong piece of string against the seal assembly, parallel with the wires. (Refer to detail "D" of Figure 4-26.)

i. Wrap the fitting halves with three turns of 1.50 inch wide masking tape. (Refer to detail "D" of Figure 4-26.)

j. Crimp the wide masking tape around the seal assembly to center the wire harness.

k. Wrap the crimped end with three turns of .750 inch masking tape. (Refer to detail "D" of Figure 4-26.)

l. Puncture the masking tape over the most convenient injection hole in the seal fitting and inject sealant with pressure gun.

m. Apply sealant over seal fitting fasteners in accordance with Paragraph 4-110.

n. Remove tape after sealant has cured (16 to 24 hours) by pulling the rip string and unwinding the tape.

o. All other electrical harnesses and wires use O-ring type pressure seal bulkhead connectors per MIL-C-5015 or "Dura-Grom" type seals.

4-113. APPLICATION OF RELEASE AGENT. The edges and faying surfaces of removable or hinged panels shall receive at least two coats of release agent (Polyvinyl Alcohol P.V.A.) prior to the sealant application, applied approximately .50 inch wider than the mating flange. The panel should be allowed to air dry between coats. Only removable covers requiring a formed-in-place gasket shall receive an application of a release agent. Sealant must be applied to the prepared surface within two hours after the completion of surface preparation. Surfaces not sealed within this time must be prepared again.

CAUTION

Do not use Polyvinyl alcohol as a release agent near acrylic (Plexiglas) windows. It will craze acrylic plastics.

4-114.. SEALING FORMED-IN-PLACE GASKETS.

NOTE

This type of seal is used on the lock handle cover of the Radome of the airplane.

Unless otherwise specified, apply a heavy bead of class B-2 sealant to the mating surfaces not coated with a release agent and spread evenly until the coating is approximately .062 inch thick. While the sealant is still fluid, secure the access cover and smooth the excess sealant flush with the top of the cover. Allow to fully cure for 48 hours at 75° F and 50% relative humidity. After curing, trim the excess sealant from around the cover; then pry one corner of the panel open, using care not to damage the gasket, and progressively free the rest of the panel. Remove all release agent and excess sealant from the panel and mating surface.

NOTE

Release agents are removable with water.

NOTE

Do not pressure test the fuselage until the sealing compound has thoroughly cured.

4-115. REMOVAL OF SEALANT. (Refer to Figure 4-28.) When it is necessary to remove fillets or beads of sealant because of rework or repair, scrape the sealant off with scrapers made of hardwood or plexiglas as shown in Figure 4-28. It is necessary to remove only the major portion of the fillets or beads. After rework, the area should be cleaned, resealed and tested for leaks.

4-116. EQUIPMENT CLEAN UP. This must be accomplished within three hours after exposure to room temperature using naptha, Methylethylketone or Totuol as a cleaning material.

4-117. FIBERGLASS REPAIRS. The repair procedure in this manual will describe the methods for the repair of fiberglass reinforced structures. Paragraph 4-118 describes Touch-up and Surface Repairs such as blisters, open seams, delaminations, cavities, small holes, and minor damages that have not harmed the fiberglass cloth material. Paragraph 4-119 describes Fracture and Patch Repairs such as punctures, breaks, and holes that have penetrated through the structure and damaged the fiberglass cloth. A repair kit, part number 756 729, that will furnish the necessary material for such repairs is available through Piper Aircraft Distributors.

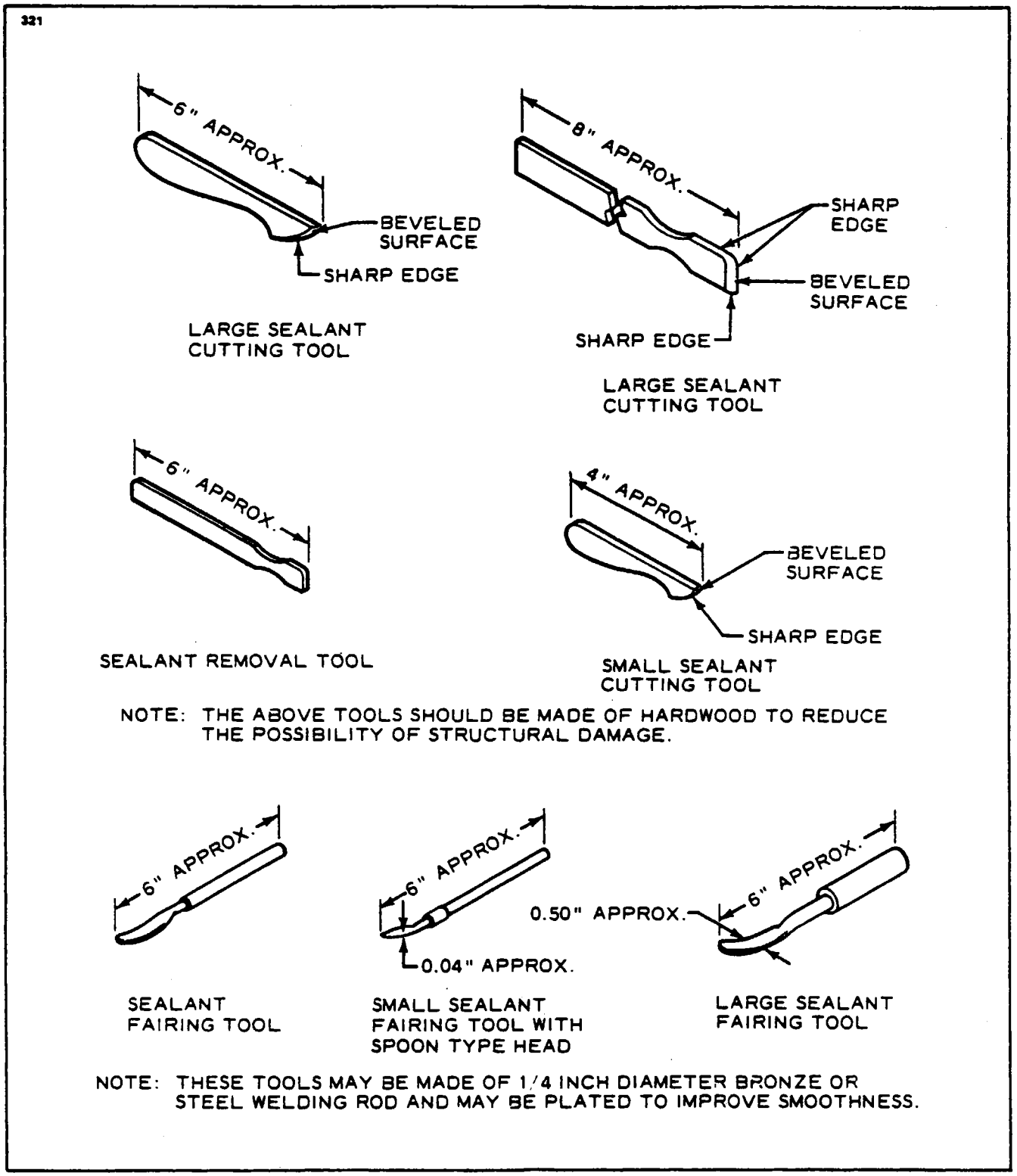

Figure 4-28. Fabricated Tools

NOTE

Very carefully follow resin and catalyst mixing instructions furnished with repair kit.

4-118. FIBERGLASS TOUCH-UP AND SURFACE REPAIRS.

a. Remove wax, oil, and dirt from around the damaged area with acetone, Methylethylketone or equivalent and remove paint to gel coat.

b. The damaged area may be scraped with a fine blade knife or a power drill with a burr attachment to roughen the bottom and sides of the damaged area. Feather the edge surrounding the scratch or cavity. Do not undercut the edge. (If the scratch or cavity is shallow and penetrates only the surface coat, continue to Step h.)

c. Pour a small amount of resin into a jar lid or on a piece of cardboard, just enough to fill the area being worked on. Mix an equal amount of milled fiberglass with the resin using a putty knife or stick. Add catalyst, according to kit instruction, to the resin and mix thoroughly. A hypodermic needle may be used to inject gel into small cavities not requiring fiberglass millings mixed with the gel.

d. Work the mixture of resin, fibers, and catalyst into the damaged area, using the sharp point of a putty knife or stick to press it into the bottom of the hole and to puncture any air bubbles which may be present. Fill the scratch or hole above the surrounding undamaged area about 0.06 inch.

e. Lay a piece of cellophane or waxed paper over the repair to cut off air and start the cure of gel mixture.

f. Allow the gel to cure 10 to 15 minutes until it feels rubbery to the touch. Remove the cellophane and trim flush with the surface, using a sharp razor blade or knife. Replace the cellophane and allow to cure completely for 30 minutes to an hour. The patch will shrink slightly below the structure surface as it cures. (If wax paper is used, ascertain wax is removed from surface.)

g. Rough up the bottom and edges of the hole with the electric burr attachment or rough sandpaper. Feather hole into surrounding gel coat, do not undercut.

h. Pour out a small amount of resin; add catalyst and mix thoroughly, using a cutting motion rather than stirring. Use no fibers.

i. Using the tip of a putty knife or fingertips, fill the hole to about 0.06 inch above the surrounding surface with the gel coat mixture.

j. Lay a piece of cellophane over the patch to start the curing process. Repeat Step f, trimming patch when partially cured.

k. After trimming the patch, immediately place another small amount of gel coat on one edge of the patch and cover with cellophane. Then, using a squeegee or the back of a razor blade, squeegee level with area surrounding the patch; leave the cellophane on patch for one to two hours or overnight, for complete cure.

l. After repair has cured for 24 hours, sand patch area using a sanding block with fine wet sandpaper. Finish by priming, again sanding and applying color coat.

4-119. FIBERGLASS FRACTURE AND PATCH REPAIRS.

a. Remove wax, oil. and dirt from around the damaged area with acetone, Methylethylketone or equivalent.

b. Using a keyhole saw, electric saber saw, or sharp knife, cut away ragged edges. Cut back to sound material.

c. Remove paint three inches back from around damaged area.

d. Working inside the structure, bevel the edges to approximately a 30 degree angle and rough sand the hole and the area around it using 80 grit dry paper. Feather back for about two inches all around the hole. This roughens the surface for strong bond with patch.

e. Cover a piece of cardboard or metal with cellophane. Tape it to the outside of the structure. covering the hole completely. The cellophane should face toward the inside of the structure. If the repair is on a sharp contour or shaped area, a sheet of aluminum formed to a similar contour may be placed over the area. The aluminum should also be covered with cellophane.

f. Prepare a patch of fiberglass mat and cloth to cover an area two inches larger than the hole.

g. Mix a small amount of resin and catalyst, enough to be used for one step at a time, according to kit instructions.

h. Thoroughly wet mat and cloth with catalyzed resin. Daub resin on mat first, and then on cloth. Mat should be applied against structures surface with cloth on top. Both pieces may be wet out on cellophane and applied as a sandwich. Enough fiberglass cloth and mat reinforcements should be used to at least replace the amount of reinforcements removed in order to maintain the original strength. If damage occurred as a stress crack, an extra layer or two of cloth may be used to strengthen area.

i. Lay patch over hole on inside of structure; cover with cellophane and squeegee from center to edges to remove all air bubbles and assure adhesion around edge of hole. Air bubbles will show white in the patch, and they should all be worked out to the edge. Remove excess resin before it gels on the part. Allow patch to cure completely.

j. Remove cardboard or aluminum sheet from outside of hole and rough sand patch and edge of hole. Feather edge of hole about two inches into undamaged area.

k. Mask area around hole with tape and paper to protect surface. Cut a piece of fiberglass mat about one inch larger than the hole and one or more pieces of fiberglass cloth two inches larger than the hole. Brush catalyzed resin over hole; lay mat over hole and wet out with catalyzed resin. Use a daubing action with brush. Then apply additional layer or layers of fiberglass cloth to build up patch to surface of structure. Wet out each layer thoroughly with resin.

l. With a squeegee or broad knife, work out all air bubbles in the patch. Work from center to edge, pressing patch firmly against the structure. Allow patch to cure for 15 to 20 minutes.

m. As soon as the patch begins to set up, but while still rubbery, take a sharp knife and cut away extra cloth and mat. Cut on outside edge of feathering. Strip cut edges of structure. Do this before cure is complete, to save extra sanding. Allow patch to cure overnight.

n. Using dry 80 grit sandpaper on a power sander or sanding block, smooth patch and blend with surrounding surface. Should air pockets appear while sanding, puncture and fill with catalyzed resin. A hypodermic needle may be used to fill cavities. Let cure and resand.

o. Mix catalyst resin and work into patch with fingers. Smooth carefully and work into any crevices.

p. Cover with cellophane and squeegee smooth. Allow to cure completely before removing cellophane. Let cure and resand.

q. Brush or spray a coat of catalyzed resin to seal patch. Sand patch, finish by priming, again sanding and applying color coat.

NOTE

Brush and hands may be cleaned in solvents such as acetone or methylethylketone. If solvents are not available, a strong solution of detergent and water may be used.

4-120. REPAINTING WITH POLYTANE ENAMEL. (Polyurethane).

4-121. SCRATCH TOUCH UP ON ALUMINUM SURFACE.

a. "Feather-Edge" the surface with fine wet or dry sandpaper (400-600 grit).
b. If gouges are deep, fill with polyester or epoxy filler and sand lightly.
c. Apply a coat of epoxy primer (8647/8648). Let dry overnight and sand lightly.
d. Apply Polytane Enamel.

4-122. COATING PROCEDURE FOR NEW ALUMINUM PANELS-NON ALODIZED.

a. Thoroughly clean all contaminents from surface-solvent wash with industrial grade MEK or Titanine Ti-Two Cleaning Thinner.

NOTE

Deoxidiene 624 or equal is recommended but not absolutely required.

b. Apply V-48 wash primer.
c. Apply either epoxy primer (8647/8648) or Polytane Urethane Primer (6351).
d. Topcoat with Polytane Enamel.

4-123. COATING PROCEDURE FOR ALODIZED ALUMINUM.

a. Thoroughly clean all contaminents from surface-solvent wash with industrial grade MEK or Titanine Ti-Two Cleaning Thinner.
b. Apply either epoxy primer (8647/8648) or Polytane Urethane Primer (6351).
c. Topcoat with Polytane Enamel.

4-124. MIXING INSTRUCTIONS FOR PRIMERS AND TOPCOATS.

a. V-48 Washer Primer:

NOTE

Never use Polytane directly over V-48 without an intermediate primer.

1. Agitate the primer well.
2. Slowly add 1 volume of catalyst while stirring to 4 volumes of primer. DO NOT reverse this procedure.
3. Reduce the above mixture with 1/2 by volume of LT 327 thinner.

b. Epoxy Primer (8647/8648):

1. Mix equal volumes of 8647, 8648 and LT 368 reducer. Allow mixture to stand at least 20 minutes before spraying.

NOTE

The pot life of the mixture is 16 hours at 70° - 75° F, and the approximate spreading rate, 400 square feet per gallon of mixture (1).

2. Allow to dry overnight before sanding and recoating with Polytane.

c. Polytane 6351 Primer:

1. Mix four volumes of Primer (6351) with one volume of Polytane Catalyst (9600).
2. Reduce this mixture with LT345 Polytane Reducer, Approximately 50%.

NOTE

One gallon of mixed material will cover approximately 300 square feet and the pot life of the mixed material is 6-8 hours at 75° F.

3. Allow to dry overnight before light sanding and recoating with Polytane Enamel.

4-125. MIXING INSTRUCTIONS FOR POLYTANE ENAMEL.

a. Polytane Enamel all colors:

1. Mix four volumes of Polytane Enamel with one volume of Catalyst (9600); up to 10% of LT345 may be added as required for spray application.

2. Spray a mist coat, allow 20 minutes setting time, follow with a full wet coat.

NOTE

Pot life of the mixed material is 8 hours at 75° F. Also allow Polytane to dry 6 hours minimum before taping.

NOTE

The universal mixing ratio of all colors makes it possible to intermix any combination of colors before catalyzing the mixture. This is an aid to those wishing to mix their own special colors. For product availability or technical information, contact Piper Customer Services or Titanine Labratory.

TABLE IV-V. PAINT MATERIALS

Piper Part No.	Titanine No.	Description
*	V 48	Wash Primer Kit
*	LT 327	Wash Primer Reducer
*	3022	Ti-Two Cleaning Solvent
170-139	8905-A	Epoxy Reducer
170-729	8951	Epoxy Primer
170-825	8678	Epoxy Converter
170-735	6351	Polytane Primer
179-141	6350	Polytane Reducer
170-807	6352	Polytane Catalyst

*No Piper Number Assigned.

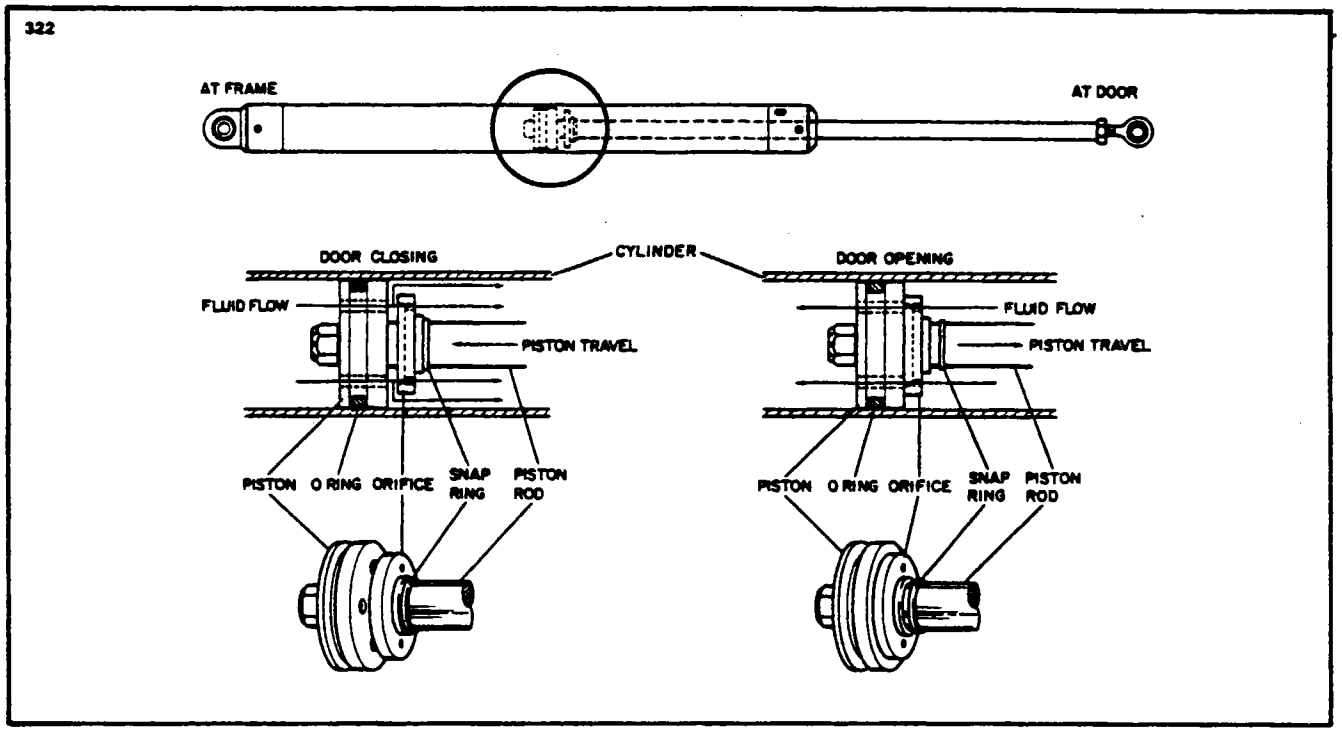

Figure 4-29. Door Snubber Assembly

4-126. CABIN DOOR SNUBBER.

4-127. DESCRIPTION AND PRINCIPLES OF OPERATION OF DOOR SNUBBER. (Refer to Figure 4-29.) The snubber assembly is a hydraulic cylinder with an orifice type valve on the piston which allows hydraulic fluid to pass at a predetermined rate during the door opening sequence. When the door is being closed, the piston is forced into the cylinder and the orifice valve opens to allow a faster flow rate of hydraulic fluid.

4-128. FILLING SNUBBER ASSEMBLY. With the snubber piston collapsed into the cylinder, remove the plug on the cylinder and fill with MIL-H-5606 hydraulic fluid; insert the plug in the cylinder and extend the piston from the cylinder; work the piston in and out to help remove any trapped air within the cylinder. Collapse the piston into the cylinder and remove the plug; add more fluid as required; then reinsert the plug in the cylinder.

4-129. REMOVAL OF DOOR SNUBBER.

a. With the door extended, remove the screws which secure the boot over the lower end of the snubber.

b. Remove the bolt and locknut which secures the lower end of the snubber to the cabin door.

c. Remove the bolt which secures the snubber assembly to the bracket on the door frame.

4-130. INSTALLATION OF DOOR SNUBBER.

a. Install the snubber to the bracket on the door frame with bolt previously removed.

b. Install the lower end of the snubber into the bracket on the door and secure with bolt and nut.

c. Secure the boot over the snubber connection on the entrance door.

4-131. CORROSION CONTROL

4-132. GENERAL. Metal corrosion is the deterioration of the metal by chemical or electrochemical attack and can take place internally as well as on the surface. Water or water vapor containing salt combine with oxygen in the atmosphere produces the main source of corrosion in aircraft. There are two general types of corrosion which cover most specific forms. One is direct chemical attack such as spilled battery acid or fumes from batteries, entrapped caustic solutions and residual flux deposits from inadequately cleaned, welded, brazed or soldered joints. The other is electrochemical attack which is like the electrolytic reaction which takes place in electroplating, anodizing, or in a dry cell battery. This reaction requires a medium, usually water, which is capable of conducting a tiny current of electricity. Different areas of the same metal surface have varying levels of electrical potential and if connected by a conductor, such as salt water, will set up a series of corrosion cells and corrosion will commence. The electrochemical type is the most common and responsible for most forms of corrosion on aircraft structures and component parts. The most effective method of corrosion control is regular cleaning and surface refinishing to remove the medium and minute electrical corrosive cells; this is the basis for effective corrosion control.

4-133. FORMS OF CORROSION. There are various forms of corrosion depending on the metal involved, its size, shape and specific function along with atmospheric conditions and what ever corrosion producing agents are present.

The following will list the most common forms found on airframe structures:

1. Surface Corrosion:

This type appears as a general roughening, etching, or pitting of the surface of the metal, usually accompanied by a powdery deposit of corrosion products. Surface corrosion is caused by either direct chemical or electrochemical attack. At times this corrosion may spread under the surface coating and not be recognized until the paint or plating is lifted off the surface in small blisters which result from the pressure of the underlying accumulation of corrosion products.

2. Dissimilar Metal Corrosion:

This type of corrosion is also known as galvanic corrosion because of the electrochemical principle involved. This electrochemical attack can be very serious because the action is usually taking place out of sight and the only way to detect it prior to structural failure is by disassembly and inspection.

3. Intergranular Corrosion:

This type of corrosion is an attack of the metal along the grain boundaries of an alloy and results from the lack of uniformity in the alloy structure. This lack of uniformity is caused by changes that occur in the alloy during heating and cooling. Intergranular corrosion may exist without visible surface evidence. This type of corrosion is difficult to detect in its original stage. Very severe corrosion of this type may cause the surface of the metal to "exfoliate." This is the flaking or lifting of the metal at the surface due to delamination of the grain boundaries caused by the pressure of corrosive residual product buildup.

4. Stress Corrosion:

This type of corrosion is the result of combined effects of sustained tensile stresses and corrosive environments. It usually occurs in assemblies such as aluminum alloy bellcranks with pressed-in bushings, landing gear shock struts with pipe-thread type grease fittings, clevis pin joint, and shrink fit parts.

5. Fretting Corrosion:

This type of corrosion develops when relative motion of small amplitude takes place between close fitting components. The rubbing contact destroys the protective film that was present on the surfaces and eventually removes small particles of virgin metal from the surfaces. These particles then act as an abrasive, thus preventing the formation of any protective oxide film and exposes fresh active metal to the atmosphere.

4-134. CONDITIONS AFFECTING CORROSION. Many things affect the type, cause, speed, and seriousness of metal corrosion. Some of these conditions can be controlled and some cannot.

1. Climate:

The environmental conditions where an aircraft is maintained and operated will greatly affect the corrosion characteristics. If the location is in an area of hot, moist climate the corrosion attack is increased considerably more than an area of dry climate. One of the worst conditions would be in an area near sea water and salt air.

2. Metal Size and Type:

Variation in size and shape of metal can indirectly affect its corrosion resistance because of greater chemical composition variations and cooling-rate differences between the surfaces and centers of the materials.

3. Foreign Material:

Among the list of foreign materials which contribute to corrosion, the following are the most frequent offenders:

a. Soil and atmospheric dust.
b. Oil, grease, and engine exhaust residues.
c. Salt water and salt moisture condensation.
d. Spilled battery acids and caustic cleaning solutions.
e. Welding, brazing and soldering flux residues. It is very important that the aircraft be kept clean. The frequency of cleaning will depend on several factors, such as geographical location, aircraft model and type of operation.

4-135. INSPECTION. Inspection for corrosion should be done on a daily basis due to the fact that corrosion is a continuing problem. Except for special requirements in trouble areas, inspection for corrosion should be a part of routine inspections such as daily and preflight.

In addition to the routine inspections the following special requirements should be observed.

1. Aircraft which are operated in and around a marine atmosphere should be given special checks on a weekly basis.
2. Aircraft which are operated in semi-arid conditions should be given monthly inspection checks.
3. Checks and inspection for corrosion should be performed by personnel familiar with corrosion problems and how to treat them.

a. Daily and preflight inspections should include the engine frontal areas, including all intake vents, engine compartment gaps, seams and faying surfaces in the exterior skins, wheel and wheel well areas, battery compartment, fuel cell drains and any other drains on the aircraft and if possible any bilge areas not requiring extensive removal of inspection access covers.

b. Detailed inspection should include the above referenced areas along with areas requiring removal of screw attached inspection plates and panels to thoroughly inspect the internal cavities of the aircraft.

4-136. CORROSION REMOVAL AND CONTROL.

a. Corrosion is a natural phenomenon and to assume that it could be prevented or eliminated is a dream. In most cases the rate of corrosive attack can be reduced to an acceptable level by proper control methods.

All corrosion products must be completely removed whenever any rework is started. The corroding process will continue even though the affected area is refinished. The following steps should be carried out prior to starting any rework.

1. Position the airplane in a wash rack or provide some type of washing apparatus for rapid rinsing of all surfaces.
2. A static ground line should be connected to the airplane.
3. Remove the airplane battery if required.
4. Protect the pitot-static ports, engine openings airscoops, louvers, wheels, tires and any other portions of the airplane from moisture and chemical brightening agents.
5. Protect the surfaces next to the rework areas from chemical paint strippers, corrosion removal agents and surface treatment materials.

b. Evaluation of the corrosion damage is required after the initial inspection and cleaning to determine the nature and extent of repairs required. To help in evaluating the extent of corrosion the following guide lines have been established:

1. Light Corrosion: This will appear as discoloration or pitting to a depth of approximately 0.001 of an inch maximum, and is normally removed by light hand sanding or small amount of chemical treatment.
2. Moderate Corrosion: This will appear similar to light corrosion except there could be some blistering or evidence of scaling and flaking. Pitting depths may be as deep as 0.010 of an inch. This type of corrosion damage is normally removed by extensive hand sanding or mechanical sanding.
3. Severe Corrosion: The general appearance may be similar to moderate corrosion with severe blistering, exfoliation, scaling and/or flaking. Pitting depths will be deeper than 0.010 of an inch, and is normally removed by extensive mechanical sanding or grinding.

c. Corrosion Removal: There are several standard methods for corrosion removal. The method used depends upon the metal and the extent of corrosion. The methods normally used are chemical treatments, hand sanding with abrasive paper or metal wool, and mechanical sanding or buffing with abrasive mats, or grinding wheels.

In some special cases a particular method may be required, depending upon type and extent of corrosion. For example, corrosion in a hole may require removal by enlarging the hole, or abrasive blasting may be required to remove corrosion from steel fasteners, or irregular shaped parts or surfaces.

All depressions resulting from corrosion rework must be faired or blended with the surrounding surface. This is accomplished by first removing any rough edges and corrosion from the damaged area, and then blending the edges of the reworked area in an elliptical shape with the major axis in the longitudinal direction. In areas which have multiple pits closely spaced the intervening material should be removed to minimize surface irregularity or waviness.

d. Reprotecting of the repaired areas is very important and should be accomplished as soon as the repair work is completed to insure the control of corrosion reappearing at the same area. The surface should be protected in the same manner as was originally manufactured unless the manufacturer recommends some other procedure or protective coating.

4-137. RADOME BOOT.

4-138. LIST OF MATERIALS.

a. Radome Boot - 3M No. SJ-8665 FP-1.
b. Marking pen.
c. Sponge or spray bottle.
d. Isopropyl alcohol.
e. Wetting solution: 25% isopropyl alcohol, 75% water, plus 1 teaspoon of liquid detergent (Ivory, Joy) per gallon of solution.
f. 3M PA-1 plastic squeeze or equivalent.
g. Masking tape - 1/2" wide.
h. Industrial razor blade knife.

4-139. REMOVAL OF RADOME BOOT.

a. Carefully score the top surface of the radome boot with a razor blade knife dissecting the boot into triangular pie-shaped sections approximately 4" to 6" at the base.
b. Pull sections off at approximately a 180° angle.
c. If adhesive residue remains after removal of film, adhesive may be removed by wiping with a rag saturated with a mixture of 75% MEK and 25% toluene, and then scraping with the PA-1 plastic applicator.
d. Care should be exercised in the use of this mixture because of possible damage to the radome surface.
e. An alternate 3M Woodgrain and Stripe Adhesive Remover Part No. 08908 aerosol spray can be used for removing adhesive residue.

4-140. PREPARATION AND INSTALLATION OF RADOME BOOT.

a. Thoroughly wash repair, primed radome with isopropyl alcohol and wipe dry.
b. Use a marking pen to place an orientation mark (+) on the top center of radome surface.
c. Position boot, with protective liner still in place, over radome.
   1. Rotate to determine optimum fit.
   2. On the top center of the boot surface, use a marking pen to trace over the orientation mark (+).
   3. Add a vertical orientation mark overlapping the bottom of the boot onto the side of the radome.
d. Turn boot inside out and place over radome (disregard orientation marks).
   1. Carefully remove transparency protective liner. Saturate the exposed adhesive surface with wetting solution as the liner is being removed to prevent adhesive to adhesive contact. (A sponge or spray bottle can be used.)
   2. After the liner has been removed, make sure that the entire adhesive surface has been saturated with wetting solution.
   3. Remove boot.
   4. Now, completely saturate the radome surface with wetting solution.
e. Place the boot over the radome (adhesive side to radome) carefully aligning the orientation marks. During this step, the boot will be right side in.
f. After proper alignment has been made, squeeze out wetting solution, starting at the top center and working out and down. Care should be taken to avoid blisters under the boot.
g. If after application of the boot, there appears to be blisters beneath the surface, piercing them with an ordinary safety pin will relieve the entrapped air or wetting solution so that the blister can be worked out with the squeegee.
h. Wrap the outside circumference of the boot with 1/2" wide masking tape at the desired location. Trim boot with an industrial razor blade knife being careful not to cut into the radome skin surface.
i. Wash boot with isopropyl alcohol, wipe dry and paint with a suitable polyurethane paint system.

4-141. INSPECTION OF RADOME BOOT.

a. Inspect for cuts, blisters, perforations, edge lifting, etc. every 100 hours.

b. The boot should be replaced at the first sign of damage. Refer to, Removal of Radome Boot instructions given in this section.

4-142. EROSION SHOE.

4-143. LIST OF MATERIALS.

a. Erosion Shoe - 3A5124.
b. Cement, EC-1403 or 1300L.
c. Scissors (2" blades with pointed tips).
d. Solvents - Toluol, Methylethylketone.
e. Cloth (clean and lint-free).
f. Paint brushes (one 1½" or 2" and one ½").
g. 2" sponge roller.
h. 3 or 4 oz. oil can (dirt and oil free).
i. Masking tape (½" and 1" widths).
j. Flexible straightedge.
k. Hypodermic needle - 22 ga.
l. ⅛" steel stitcher roller.
m. "v" knife.

NOTE

MEK (Methylethylketone) can be used instead of toluol to activate cement. However, MEK causes very rapid drying and provides only 10 seconds working time for application compared with 40 seconds for Toluol.

CAUTION

All cements and solvents used are flammable and their fumes slightly toxic. Therefore, all work should be done in a well ventilated area away from any sparks or flame.

4-144. GENERAL. Ambient temperature for installation should be between 40°F and 110°F. Humidity must be below 99% during installation. Longer drying time of cement, coats may be required as humidity approaches 99%.

EC1403 cement is normally used as received. However, erosion shoes with a tapered trailing edge or shoes with a gage of less than .060 should be installed with cement diluted with one part MEK to two parts of cement for smoother, neater installation.

NOTE

Use only clean, lint-free cloths for cleaning and activating cement coats.

Apply cement coats evenly and uniformly. Cement has reached "proper tack" when it looses "webbiness" and when touched with back of a finger knuckle, feels sticky but will not pull loose.

4-145. REMOVAL OF EROSION SHOE.

a. Squirt a little toluol from clean oil can to soften the adhesion line.

b. Apply minimum amount of solvent while slight tension is applied to the shoe.

c. Allow solvent to do most of the work.

4-146. PREPARATION AND INSTALLATION OF EROSION SHOE.

a. All paint must be removed by using appropriate paint remover or by sanding. (Epoxy-based paint need only be roughened.) Any holes or dents in the structure must be filled with the appropriate repair material and sanded. Clean the area to be covered, using MEK or equivalent.

b. Dry fit erosion shoe to the cleaned structure. Position identified "top" surface of erosion shoe on top surface of structure. Then adjust each side to provide equal distance from the trailing edge of the shoe to the structure attachment line. Smooth out any wrinkles.

1. Now apply ½" masking tape to the structure, next to the shoe's trailing edge.

c. At the top, draw a mark on the masking tape to correspond with the center line mark on the inside of the erosion shoe. Repeat at bottom and remove erosion shoe from structure.

d. Apply 1" wide masking tape to butt against forward edge of the ½" wide tape previously applied. Leading edge of 1" tape will now provide the final trim line.

NOTE

Smaller erosion shoes with a distance of less than 10" from the center to the trailing edge may be installed by applying the ½" masking tape approximately ¼" beyond the shoe trailing edge and need not be final trimmed.

e. Clean the marked off area thoroughly with MEK or equivalent. For final cleaning, wipe the solvent film off quickly with a clean cloth before it dries.

1. Now wash the back (rough surface) of erosion shoe with a clean cloth moistened with MEK. (They are dusted to prevent sticking.) Change cloths frequently to avoid recontamination.

CAUTION

Do both complete cleaning operations at least twice.

f. Thoroughly mix EC1403 (or equivalent) cement before using. Apply one even brush coat to both the back surface of erosion shoe and the mating structure, up to the masking tape. Allow first coat to air dry a minimum of 30 minutes. If temperature is below 50°F allow cement to dry at least one hour.

1. Apply a second cement coat to both surfaces allowing to dry thoroughly for at least one-half hour (one hour preferred). Apply cement evenly to assure smooth installation.

2. Parts may be cemented up to a maximum of 48 hours before actual installation, if cemented parts are covered and kept clean.

g. Using a straightedge, draw a line on the structure to connect the upper and lower marks previously put on the masking tape. (Cement will now be dry and tack free.)

1. Position the shoe on the structure (dry cemented surfaces against each other) so reference lines coincide. Hold the shoe at its central area. Do not move or change its referenced position as you prepare to activate the cement.

h. Fold back the trailing edge and use a clean, lint-free cloth moistened (not dripping) with toluol, to activate the cement on the nose or leading edge of the shoe. Activate mating areas, not to exceed one square foot at a time. Avoid excessive rubbing which could remove cement from surfaces.

i. After cement reaches "proper state of tack" (refer to paragraph 4-145), roll activated part of shoe against structure with sponge roller. Match reference lines as shoe is rolled down. Use care to prevent trapping air between shoe and structure. Avoid stretching the shoe; otherwise, difficulty will be encountered around the lower periphery.

NOTE

When cementing, activating and rolling erosion shoes on radome, start at the center and work in concentric circles outward.

CAUTION

Avoid twisting or sharp creasing of shoe. Otherwise, cement may be pulled loose from structure or shoe.

j. Should it be necessary to remove or loosen an installed shoe, squirt a little toluol from clean oil can to soften the "adhesion" line. Apply only minimum amount of solvent while slight tension is applied to the shoe. Allow solvent to do most of the work of separating cemented coats because if cement pulls loose from either the structure or shoe, the area must be re-cemented.

1. Now activate another section adjacent to the bonded area. Be certain to activate cement immediately adjacent to the bond line, thus assuring complete adhesion throughout installation. When cement has reached "proper state of tack," roll down thoroughly and continue until shoe is completely attached.

k. Using sponge roller, go over entire surface, applying pressure and rolling from the center line or leading edge outward to trailing edge of shoe. With steel stitcher roller, roll thoroughly at trailing edge line where shoe meets the 1" tape.

l. Make initial cut into material overlapping the tape, using scissors held at an angle. Using a "v" knife or pair of scissors with blades opened to form a "v," neatly trim off excess shoe material overlapping edge of 1" tape, applying light, uniform tension to trim material.

m. If an air pocket or blister is formed, release air by inserting a hypodermic needle at 45° angle or less, pointed toward center or leading edge. Apply finger pressure on blister to remove air and reroll using steel stitcher.

1. Remove all masking tape and clean excess cement from structure using MEK, wiping away from the trailing edge. Prevent solvent from running under and loosening edges of erosion shoe. Restitch shoe at its trailing edge, using ⅛" steel stitcher.

2. Inspect complete trailing edge to see that it is firmly bonded.

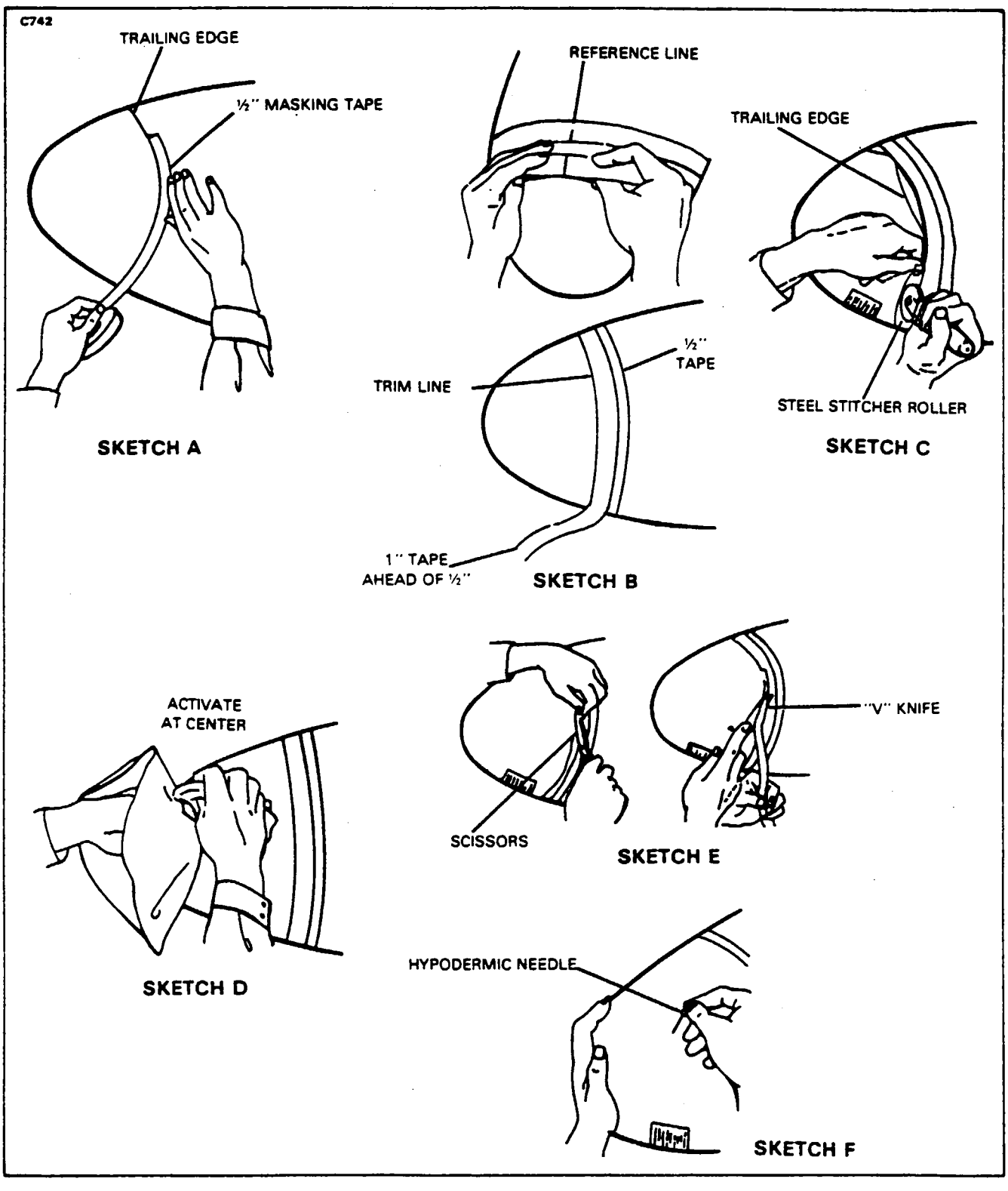

Figure 4-30. Erosion Shoe Installation

SECTION V
SURFACE CONTROLS

Paragraph		Aerofiche Grid No.
5-1.	Introduction	1I10
5-2.	Description and Principle of Operation	1I10
5-3.	Troubleshooting	1I10
5-4.	Standard Procedures	1I10
5-5.	Control Column Assembly	1I11
5-6.	Removal of Control Column Assembly	1I11
5-7.	Installation of Control Column Assembly	1I17
5-8.	Aileron Controls	1I20
5-9.	Removal of Aileron Control Cables	1I20
5-10.	Installation of Aileron Control Cables	1I20
5-11.	Rigging and Adjustment of Aileron Controls	1I21
5-12.	Removal of Aileron Bellcrank Assembly	1I22
5-13.	Installation of Aileron Bellcrank Assembly	1I22
5-14.	Aileron Trim Controls	1J1
5-15.	Removal of Aileron Trim Assembly (Fuselage)	1J1
5-16.	Installation of Aileron Trim Assembly (Fuselage)	1J1
5-17.	Removal of Aileron Trim Assembly (Wing)	1J2
5-18.	Installation of Aileron Trim Assembly (Wing)	1J2
5-19.	Rigging and Adjustment of Aileron Trim	1J2
5-20.	Elevator Controls	1J3
5-21.	Removal of Elevator Control Cables	1J3
5-22.	Installation of Elevator Control Cables	1J4
5-23.	Rigging and Adjustment of Elevator Controls	1J8
5-24.	Removal of Elevator Bellcrank Assembly	1J9
5-25.	Installation of Elevator Bellcrank Assembly	1J11
5-26.	Elevator Trim Controls	1J12
5-27.	Removal of Forward Elevator Trim Assembly	1J12
5-28.	Installation of Forward Elevator Trim Assembly	1J12
5-29.	Removal of Rear Elevator Trim Assembly	1J13
5-30.	Installation of Rear Elevator Trim	1J13
5-31.	Rigging and Adjustment of Elevator Trim	1J14
5-32.	Determining the Friction in the Elevator Control System	1J15
5-33.	Rudder Controls	1J15
5-34.	Removal of Rudder Control Cables	1J15
5-35.	Installation of Rudder Control Cables	1J15
5-36.	Rigging and Adjustment of Rudder Controls	1J18
5-37.	Rudder Trim Controls	1J19
5-38.	Removal of Forward Rudder Trim Assembly	1J19
5-39.	Installation of Forward Rudder Trim Assembly	1J20
5-40.	Removal of Rear Rudder Trim Assembly	1J20
5-41.	Installation of Rear Rudder Trim Assembly	1J21
5-42.	Rigging and Adjustment of Rudder Trim	1J21
5-43.	Removal of Rudder Sector	1J22
5-44.	Installation of Rudder Sector	1J22

Revised: 7/2/84

5-45. Rudder Pedal Assembly 1J22
5-46. Removal of Pedal Assembly 1J22
5-47. Installation of Pedal Assembly 1J23
5-48. Rigging and Adjustment of Rudder Pedals 1K1
5-49. Trim Indicators 1K1
5-50. Adjustment of Trim Indicators 1K1
5-51. Forward Trim Mechanism 1K1
5-52. Removal of Forward Trim Mechanism 1K3
5-53. Installation of Forward Trim Mechanism 1K3
5 54 Trim Drum 1K3
5-55. Wrapping the Trim Drum 1K3
5-56. Wing Flap Controls (Piper System) 1K4
5-57. Removal of Flap Actuator Motor 1K4
5-58. Installation of Flap Actuator Motor 1K5
5-59. Removal of Flexible Actuator Shaft 1K5
5-59a. Inspection of Flexible Actuator Shaft 1K5
5-60. Installation of Flexible Flap Actuator Shaft 1K5
5-61. Removal of Flap Transmission Assembly 1K7
5-62. Cleaning, Inspection and Repair of Flap Transmission 1K7
5-63. Installation of Flap Transmission Assembly 1K7
5-64. Removal of Flap Position Sender 1K7
5-65. Installation of Flap Position Sender 1K8
5-66. Rigging and Adjustment of Flap 1K8
5-67. Rigging and Adjustment of Flap Position Sender 1K9
5-68. Adjustment of Flap Selector Switches 1K9
5-69. Inspection of Time Delay Switch Operation 1K9
5-70. Wing Flap Controls (Calco System) 1K11
5-71. Description and Operation 1K11
5-72. Removal of Flap Actuator Motor 1K11
5-73. Disassembly of Flap Actuator Motor 1K13
5-74. Service of Flap Actuator Motor 1K13
5-75. Assembly of Flap Actuator Motor 1K15
5-76. Installation of Flap Actuator Motor 1K15
5-77. Removal of Flexible Actuator Shaft 1K16
5-78. Installation of Flexible Actuator Shaft 1K16
5-79. Removal of Flap Transmission 1K16
5-80. Deleted.
5-81. Service of Flap Transmission 1K16
5-82. Deleted
5-83. Functional Test of Flap Transmission 1K18
5-84. Installation of Flap Transmission 1K18
5-85. Removal of Flap Control Box (Selector) 1K18
5-86. thru 5-89. Deleted
5-90. Installation of Flap Control Box (Selector) 1K19
5-91. Removal of Flap Control Amplifier 1K19
5-92. Installation of Flap Control Amplifier 1K19
5-93. Rigging and Adjustment of Flaps 1K19
5-94. Electrical System Functional Test Procedure 1L1
Appendix Control Cable Inspection - Standard Procedures 1L18

SECTION V

SURFACE CONTROLS

5-1. INTRODUCTION. This section explains the removal, installation, rigging and adjustment procedures for the various control surfaces of the airplane. The different control surfaces do not have to be removed in order of paragraphs in this section, since each paragraph describes the individual removal and installation of each control surface. A troubleshooting chart is located at the end of this section.

5-2. DESCRIPTION AND PRINCIPLE OF OPERATION. The primary flight controls are of the conventional type, operated by dual-control wheels and rudder pedals. On the forward end of each control column is a tube and sprocket assembly. A chain is wrapped around the sprockets to connect the right and left controls. Over an additional sprocket on the left assembly is a chain that connects to cables that operate the aileron bellcrank and push-pull rods. Also on each control column is a roller assembly that connects through links to control arms, a torque tube and a sector assembly. Attached to the sector are control cables that operate the elevator bellcrank and push-pull rod. Attached to the left set of rudder pedal arms are control cables that lead to the rudder sector. The rudder pedals also control the action of the brakes and the nose wheel steering. For coordinated action of the rudder and ailerons, their control cables are interconnected through a cable spring system. The aileron, elevator, and rudder trim controls are mounted on the pedestal along with position indicators for each trim system. As the controls are moved at the pedestal, they rotate cable wrapped drums below the floorboards and in turn activate the particular trim system desired. A mechanical indicating system is used to show the position of each trim tab. The wing flap system consists of a three position flap selector switch, a reversible permanent magnet motor that supplies power to operate the flaps through flexible driveshafts to transmission assemblies in the trailing edge of each wing. As the flaps are extended or retracted, a sender unit located in the left wing transmits a signal to a flap position indicator mounted in the instrument panel. Incorporated in the flap system is an approach position that allows the pilot to automatically select 15 degrees of flap extension by placing the selector switch in the approach position. As the flaps are extended, an arm mounted on the sender unit shaft contacts a switch to limit flap extension to the approach position. A time delay switch in the flap system prevents an excessive asymmetric extension of flaps under the condition that the left flap fails to move from either completely retracted or extended position.

5-3. TROUBLESHOOTING. Troubles peculiar to the control systems are listed in Table V-III at the end of this section along with their probable causes and suggested remedies.

5-4. STANDARD PROCEDURES. The following tips may be helpful in the removal and installation of the various assemblies:

a. It is recommended, though not always necessary, to level and place the airplane on jacks during rigging and adjustment of controls.

b. Remove turnbuckle barrels from cable ends before withdrawing cables through structures.

c. Tie a cord to the cable end before drawing the cable through the structures to facilitate reinstallation of cable.

d. Turnbuckle stations are given at neutral position.

e. When referring to marking cable ends, etc., before disconnecting, a felt marker may be used.

f. When turnbuckles have been set to correct cable tension, no more than three threads should be exposed from either end of the turnbuckle barrel.

g. Cable tension should be taken with the appropriate surface control in its neutral position.

NOTE

Whenever the elevator control system is serviced, a friction check of the system must be accomplished in accordance with instructions given in Section IV, Paragraph 4-95 of this manual.

h. Be certain that all cable guard pins are installed in their proper location, and are not interfering with control cable travel.

i. When installing rod end jam nuts refer to Figure 5-2 for proper installation method.

5-5. CONTROL COLUMN ASSEMBLY.

5-6. REMOVAL OF CONTROL COLUMN ASSEMBLY. (Refer to Figure 5-1.)

a. To remove either control wheel (43) with tube (27 or 44), proceed as follows:

1. Mark the control tube (27 or 44), ring (26), and collar (21) in relation to their location around the roller fitting (23).

2. Cut the wire (24) that safeties the cap bolts (25) that secure the control tube (27 or 44) and ring (26) to the roller fitting (23). Remove the cap bolts from the fitting.

3. Slide the control tube from the roller fitting and ring and draw the tube from the instrument panel. Hold the square tube (31) assembly so that it will not fall.

b. The square tube (31) assembly may be removed and disassembled by the following procedure:

1. Remove the cotter pins (33) and bolt assemblies (32) that join the links (30) with the control arm (11 and 13, or 16 and 18).

2. Remove the bolt assembly (35) that joins the forward end of the square tube (31) with the flexible joint (36) of the sprocket assembly. Remove the square tube assembly from behind the instrument panel.

3. The square tube assembly may be disassembled by first removing the collar (34) from the tube (31). Draw the tube from the roller fitting (23).

4. Cut the wire (24) that safeties the cap bolts (59) that secure the collar (21) to the roller fitting (23). Remove the bearing housing (22) from the fitting.

5. Disassemble the rollers (61) from the fitting. Note the number and location of the spacer washers (64).

c. The sprocket assembly may be removed from the bulkhead and disassembled by the following procedure:

1. Disconnect one of the two turnbuckles (41) that connect the horizontal roller chains (40 and 42). Remove the outboard chain guard (72) from the inside of the sprocket housing (75). Unwrap the chain from the sprocket that is to be removed.

2. If the left sprocket assembly (75) is to be removed, first remove the floor panel located between the control pedestal and left side of the fuselage. Loosen one of the aileron cable turnbuckles to relieve tension from the vertical roller chain (52). Disconnect one end of the chain where it attaches to the control cable and unwrap the chain from the sprocket.

3. Remove the cap bolts (39) that attach the sprocket housing to the bulkhead and remove the housing.

4. To disassemble the sprocket assembly, remove the bolt that secures the sprocket to the sprocket stud (74). Use a Kaynar wrench (P/N W10-3) to remove the hex nut.

Kaynar MFG. Co. Inc., P.O. Box 3001
Fullerton, California 92634
(714) 871-1550

5. Slide the sprocket stud from the sprocket housing (75).

TABLE V-I. CONTROL SURFACE TRAVEL AND CABLE TENSION

49571, 51184, 29406, 81932

AILERON AND AILERON TRIM TAB

A. 15° ± 1°
B. 20° ± 1°
C. 24° ± 1°
D. 14° ± 1°

NOTE: Trim Tab Travel with Aileron in Neutral Position

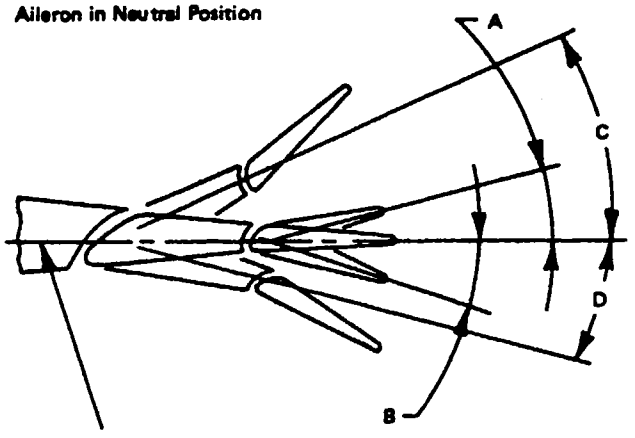

CONTROL WHEEL

NOTE:

1. The maximum total play with the sprocket and interconnect chain locked.
2. Rollers .050
   Universal .060

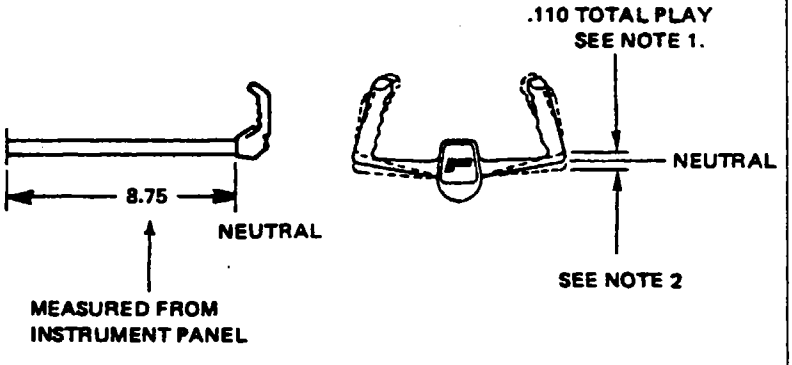

FLAP

15° ± 1° APPROACH

40° + 1° down

CABLE TENSIONS	PA-31T	PA-31T & PA-31T1	PA-31T2
Aileron	35 lbs ± 2 lbs	35 lbs ± 2 lbs	35 lbs ± 2 lbs
Aileron Trim Tab	14 lbs ± 2 lbs	14 lbs ± 2 lbs	14 lbs ± 2 lbs
Elevator	20 lbs ± 2 lbs	21 lbs ± 2 lbs	35 lbs ± 2 lbs
Elevator Trim Tab	14 lbs ± 2 lbs	14 lbs ± 2 lbs	14 lbs ± 2 lbs
Rudder	25 lbs ± 2 lbs	26 lbs ± 2 lbs	26 lbs ± 2 lbs
Rudder Trim Tab	14 lbs ± 2 lbs	14 lbs ± 2 lbs	14 lbs ± 2 lbs
SAS Actuator	See Note 2 and Note 4	— See Note 4	—

NOTES

1. MEASURE CABLE TENSION NEAR THE TURNBUCKLES USED TO ADJUST TENSION.
2. 23 ± 1 POUNDS TENSION ON EARLIER MODELS AND 10 ± 1 POUNDS TENSION ON MODELS WITH SERIAL NUMBERS 31T-7920053, 31T-8020001 AND UP.
3. WHEN ADJUSTING ELEVATOR CABLE TENSION, HOLD UP OR PLACE A BLOCK UNDER BOB WEIGHT, IF INSTALLED PRIOR TO CHECKING CABLE TENSIONS.
4. PA-31T MODELS WITH BOB WEIGHTS INSTALLED, CABLE TENSION SHOULD BE 10 ± 1 LBS.

504

TABLE V-I. CONTROL SURFACE TRAVEL AND CABLE TENSION

ELEVATOR AND ELEVATOR TRIM TAB

A. 1° ± 1° UP TRIM
B. 36° ± 1° DOWN TRIM
C. 16° ± .5° UP
D. 20° ± 1° DOWN

NOTES:

1. Trim Tab Neutral Position is Tab Trailing Edge even with trailing edge of the Elevator, with Elevator in Neutral Position.
2. Trim Tab Free Play Must Not Exceed 10 of an inch. Refer To Section IV For Procedure.

NOTE: Trim Tab Travel with Elevator in Neutral Position

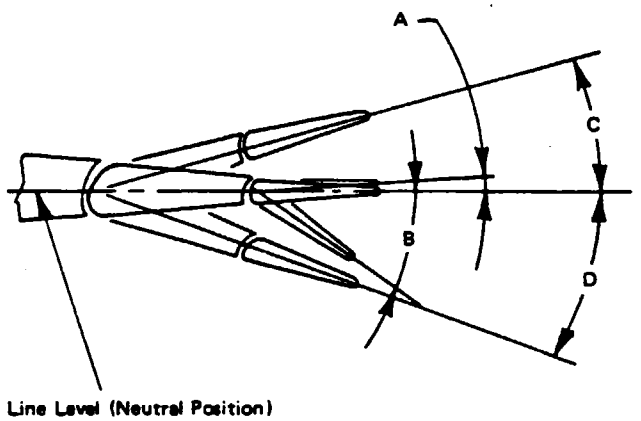

RUDDER AND RUDDER TRIM TAB

A. 15° ± 1°
B. 17° ± 1°
C. 20° ± 1°
D. 45° ± 1°
E. 35° + 0° -1°
F. 35° + 0° -1°
G. 2 1/4" + 1/16" - 0
H 5 1/8" + 1/16" - 0

NOTE: On aircraft models with serial numbers 31T-7400002 through 31T-8020007 and 31T-7804001 through 31T-8004008, refer to the latest revision of Piper Service Bulletin Number 674 for additional information on trim tab rigging.

NOTE: Trim Tab Travel with Rudder in Neutral Position

C225

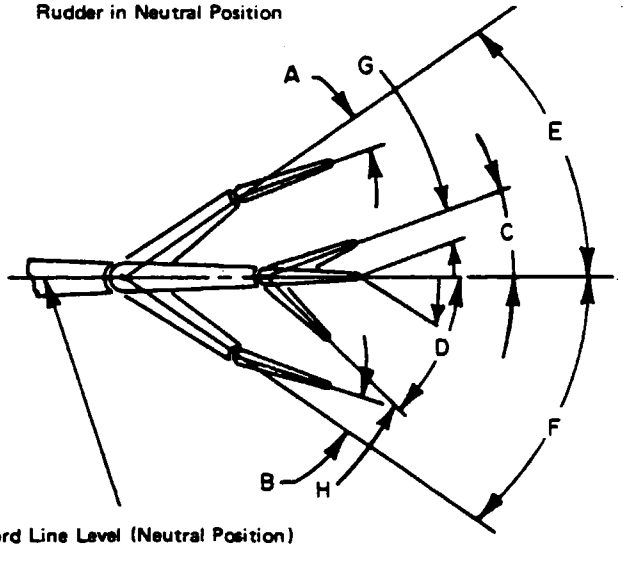

RUDDER PEDAL

21° 15' each way

Neutral to Fwd 3.87 in.
Neutral to Aft 3.63 in. } 7.50 Total

TABLE V-II. ELEVATOR TRIM DRUM AND CABLE SPECIFICATIONS

Drum Part No. and Location	Cable Part No. and Length	Length of Cable End 1 at start of wrapping	Cable end positions on drum after wrapping
51288-2 Left hand	80420-2 260.00 inches	125.5 inches	End 1 = 18.0 inches longer than End 2. (See Note)
51288-3 Right hand	41734-46 312.25 inches	164.75 inches	End 1 = 44.6 inches longer than End 2.
51288-5 Right hand when Auto-pilot is installed	41734-48 322.12 inches	174.75 inches	End 1 = 54.5 inches longer than End 2.
			NOTE: End 1 has the right hand turnbuckle terminal.

d. To remove the torque tube (14) assembly, use the following procedure:

1. With the floor panel removed from between the control pedestal and the left fuselage side panel and the links (30) disconnected from between the control tube housing (22) and the torque tube arms (11, 13, 16 and 18), loosen one of the elevator control cable turnbuckles enough to relieve cable tension.

2. Remove the bolts and roll pins (10 and 17) that secure the elevator control sector (8) and the right set of control arms (16 and 18) to the torque tube (14).

3. Loosen the bolts (20) that secure the right tube bearing (19).

4. Slide the tube (14) to the right and remove the control sector (8) from the tube. If desired, the cables may be removed from the sector.

5. Slide the tube from the left bearing (15), lower the left end of the tube and slide it from the right bearing (19).

6. The control arms and bearings may be removed, if desired.

e. The control tube guide located on the right side of the instrument panel may be removed by removing the assembly cover (49) and the screws that secure the housing (47).

1193

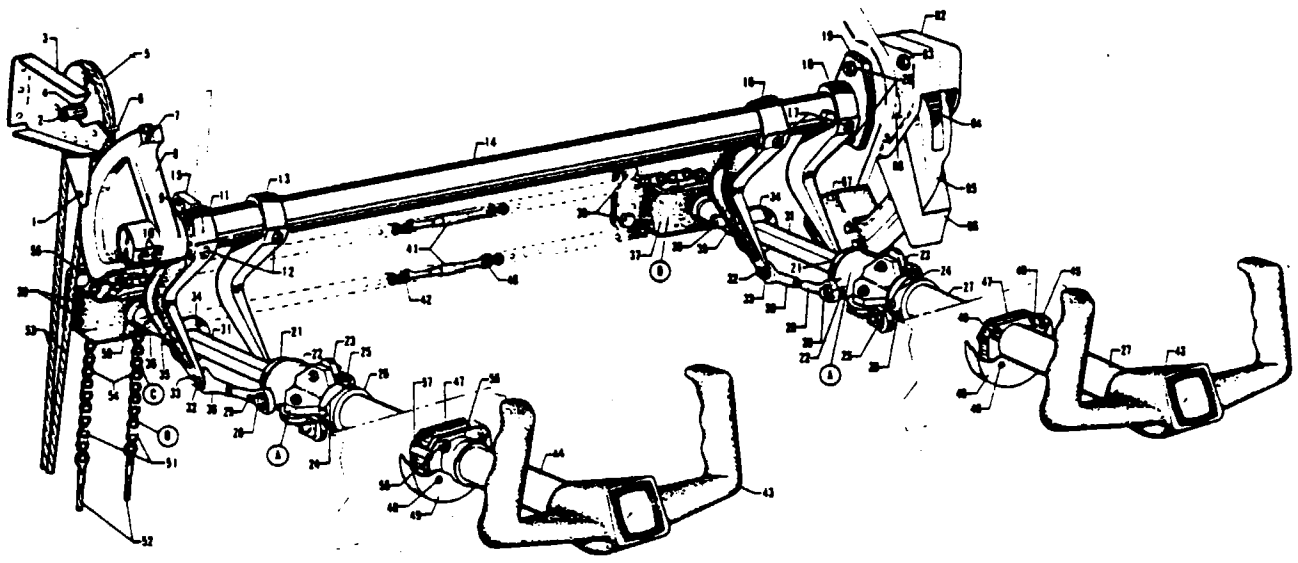

1 PIN, CABLE GUARD
2. BOLT ASSY
3 BRACKET, MOUNTING
4 BUSHING
5 PULLEY
6 PIN, CABLE GUARD
7 PLATE, CABLE ATTACH
8 SECTOR, CONTROL
9 BOLT ASSY
10 BOLT ASSY AND ROLL PIN
11 ARM, CONTROL L.O
12 BOLT ASSY AND ROLL PIN
13 ARM, CONTROL, L.I.
14 TUBE, TORQUE
15 BEARING, BLOCK
16 ARM, CONTROL, R I.
17 BOLT ASSY AND ROLL PIN
18. ARM, CONTROL, R O
19. BEARING, BLOCK
20 BOLT ASSY
21 COLLAR, CONTROL SHAFT
22 HOUSING, BEARING
23 FITTING, ROLLER
24 SAFETY WIRE
25 CAP BOLT
26 RING, CONTROL TUBE
27 CONTROL TUBE, RIGHT
28 BOLT
29 SAFETY WIRE
30. LINK ASSY
31. SQUARE TUBE
32. BOLT ASSY
33. COTTER PIN
34. COLLAR, STOP
35 BOLT ASSY
36 UNIVERSAL ASSY
37 HOUSING, SPROCKET
38 SCREW
39 CAP BOLT
40. CHAIN RIGHT
41 TURNBUCKLE
42. CHAIN LEFT
43. CONTROL WHEEL
44. CONTROL TUBE, LEFT
45 SCREW, ADJUSTMENT
46 BLOCK
47 HOUSING, GUIDE ASSY
48 SCREW
49 COVER
50. SPROCKET
51. LINK ASSY
52. CONTROL CABLE, AILERON
53 CONTROL CABLE, AILERON
54 CHAIN, AILERON
55. PLATE, CABLE ATTACH
56 BUSHING
57. COLLAR
58. NUT
59 CAP BOLT
60. WASHER
61 ROLLER
62. BLOCK
63. BEARING
64 WASHER, SPACER
65. BOLT ASSY
66 ANGLE
67 BUSHING, ECCENTRIC
68. PLATE, LINK
69 LOCK, CHAIN
70. PIN LINK
71 CABLE END
72. GUARD, CHAIN
73. BUSHING
74 BOLT ASSY
75 HOUSING, SPROCKET
76. BUSHING
77. NUT, KAYNAR
78. WASHERS
79 BULKHEAD
80. SHIM 032
81 SHIM 012
82. SUPPORT FITTING - SEE NOTE
83. BOLT ASSY - SEE NOTE
84 SPUR GEAR - SEE NOTE
85 ARM, BOBWEIGHT - SEE NOTE
86. STOP, BOBWEIGHT - SEE NOTE
87 BOBWEIGHT - SEE NOTE
88 GEAR BUSHING - SEE NOTE

NOTE
USED ON PA-31T WITH SERIAL NUMBERS 31T-7920053, 31T-8020001 AND UP, PA-31T1, AND PA-31T2

Figure 5-1 Control Column Installation.

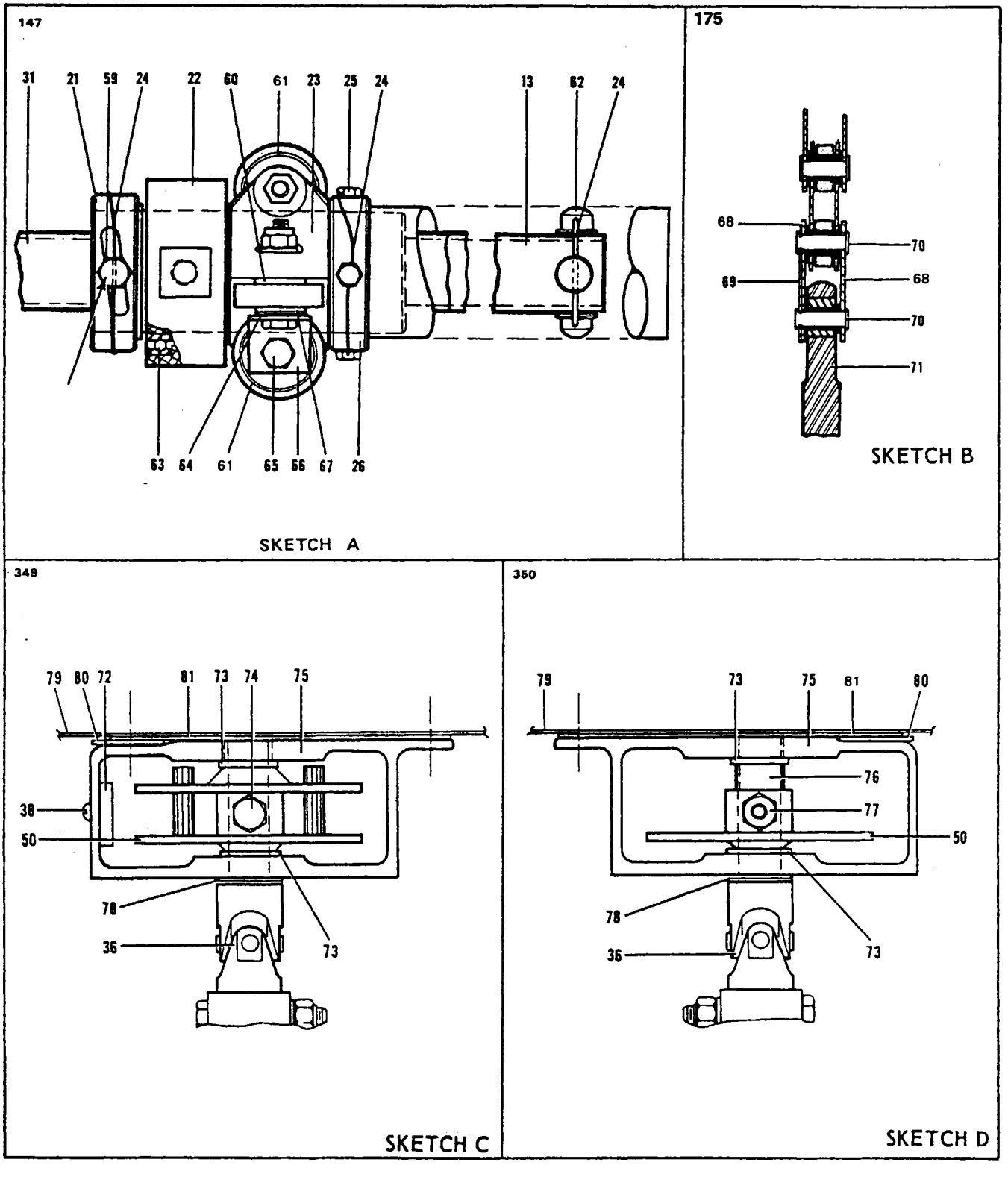

Figure 5-1. Control Column Installation (cont.)

f. The control tube guide and lock assembly, located on the left side of the instrument panel may be removed by removing the assembly cover (49), and the four nuts (58) which hold the bushing (56) and collar (57) to the panel.

5-7. INSTALLATION OF CONTROL COLUMN ASSEMBLY. (Refer to Figure 5-1.)

a. Installation of the control column torque assembly may be accomplished by the following procedure:

1. Attach the left torque bearing (15) to its mounting bracket and secure. Slide the left set of control arms (11 and 13) on the torque tube (14); install roll pins with bolts (12) and tighten bolts to a standard torque. Lubricate the bearing.

2. Place the right torque bearing (19) in position and tighten nuts only enough to hold the bearing from dropping. Lubricate the bearing.

3. Slide the right set of control arms (16 and 18) on the torque tube (14) and insert the right end of the tube through the right bearing (19).

4. Raise the left end of the tube enough to insert the end of the tube in the left bearing (15).

5. Slide the tube to the left and at the same time install the control sector (8), with cables attached, on the end of the tube. With the sector and arms in position, install roll pins and bolts (10 and 12) in the control sector and right set of control arms. Tighten sector, control arm and bearing bolts to a standard torque.

6. Reconnect elevator cable turnbuckle and set cable tension.

b. The aileron chain sprocket assembly may be assembled and installed by the following procedure:

1. Position the sprocket (50) in the housing, spacer bushing (76) (right only) and slide the stud in place. Insert bolt (74) through the sprocket and stud; install nut (77) and tighten to a standard torque. Use Kaynar wrench, P/N W10-3.

Kaynar MFG. Co. Inc., P.O. Box 3001
Fullerton, California 92634
(714) 871-1550

NOTE

The left sprocket must be placed in its housing to allow the sprocket to rotate 180° from stop to stop.

2. Attach the sprocket assembly to the bulkhead and torque.

3. Position the horizontal roller chain (40 and 42) around the right and left sprocket and temporarily connect turnbuckles. Check chain tension and correct position after both control wheels are installed.

4. Install chain guard (72) inside sprocket housing (75).

5. If the left sprocket assembly was removed, wrap the vertical chain around the sprocket and connect the chain to the control cable end. Ascertain that when the sprocket is centered between stops the roller chain is centered. Set elevator cable tension and safety turnbuckle.

c. The square tube (31) assembly may be assembled and installed by the following procedure:

1. Slide the square tube (31) in the roller housing (23).

2. Install the rollers (61) and washers (60) on the roller housing and adjust with the use of the eccentric bushings in each roller to allow .003 of an inch between the square tube and rollers. Finish by installing angles (66) shimmed with spacer washers (64) as required, and tighten bolt assemblies to a standard torque. Recheck clearance between rollers and square tube and lubricate the rollers.

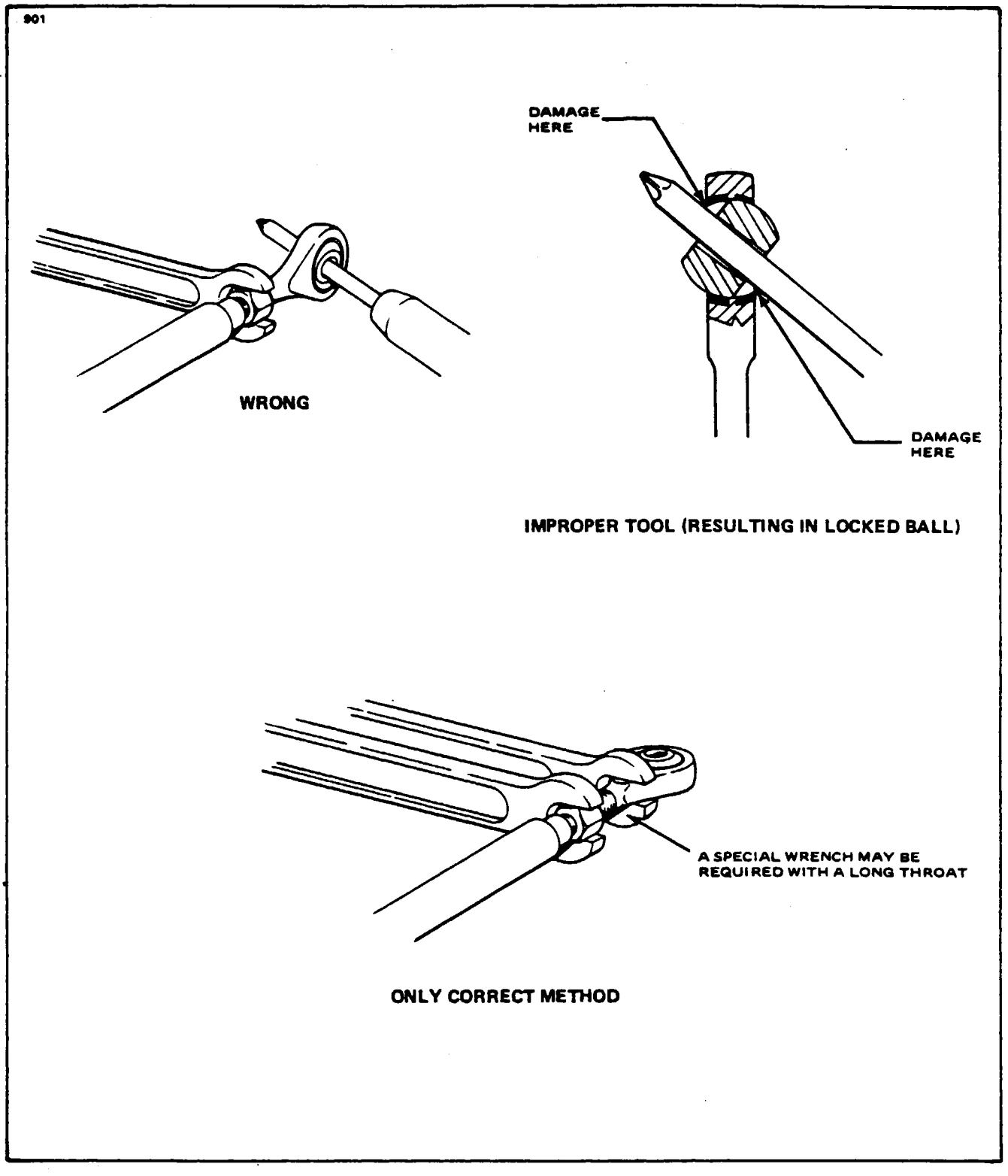

Figure 5-2. Correct Method of Installing Rod End Bearings

3. Install the bearing housing (22) with bearings (63) on the roller housing. Install collar (21) and cap bolts (59). Rotate the collar tight against the bearing housing, tighten cap bolts and safety.

4. Ascertain that the four nylon guides (62) are installed and safetied.

5. Slide the collar (34) on the forward end of the square tube.

6. Place the square tube assembly in position and connect it to the flexible joint (36) of the sprocket assembly. Install bolt assembly and secure.

d. Attach the right control tube guide block (47) to the front (face) side of the instrument panel. Tighten the two top attachment screws and leave the two bottom screws (48) loose until the final adjustment is made.

e. Attach the left control tube guide block (47) and lock assembly by positioning the collar (57) onto the studs, being sure the slotted end is toward the center control pedestal. Install the bushing (56) with the holes in a vertical position and secure the complete assembly with four nuts (58). Leave the two bottom nuts (58) loose until the final adjustment is made.

f. To install the control wheel, the following procedure may be used:

1. Slide the tube guide cover (49) on the control tube and insert the tube through the instrument panel.

2. Place the ring (26) over the end of the control tube and slide the end of the tube over the end of the roller fitting. Install cap bolt (25), torque and safety.

3. Check that when the left sprocket (50) is centered between its stops, the control wheel will also be centered. If the control wheel does not center, it may be necessary to remove the cap bolts (25) and rotate the control tube (44) on the roller housing (23) or remove the bolt (35) that joins the square tube (31) and flexible joint (36), and rotate the tube 180°. Reinstall bolts, torque and safety.

g. Adjust the control wheel tube slides (46) at the instrument panel by tightening the adjustment screw (45) to remove any play in the tube without restricting normal tube movement.

h. Adjust the horizontal roller chain so that when the left control wheel is held solid, in center position, the right wheel will also be centered with no play. Safety turnbuckles (41) and secure chain guard (72) in the sprocket housing (75).

i. Used on PA-31T with Serial Numbers 31T-7920053, 31T-8020001 and up, PA-31T1 and PA-31T2, rig the bobweight as follows:

1. With control wheels in their neutral position, the center of the bolt A (refer to Figure 5-3) must be in line with the edge of the bracket.

j. Check control operation.

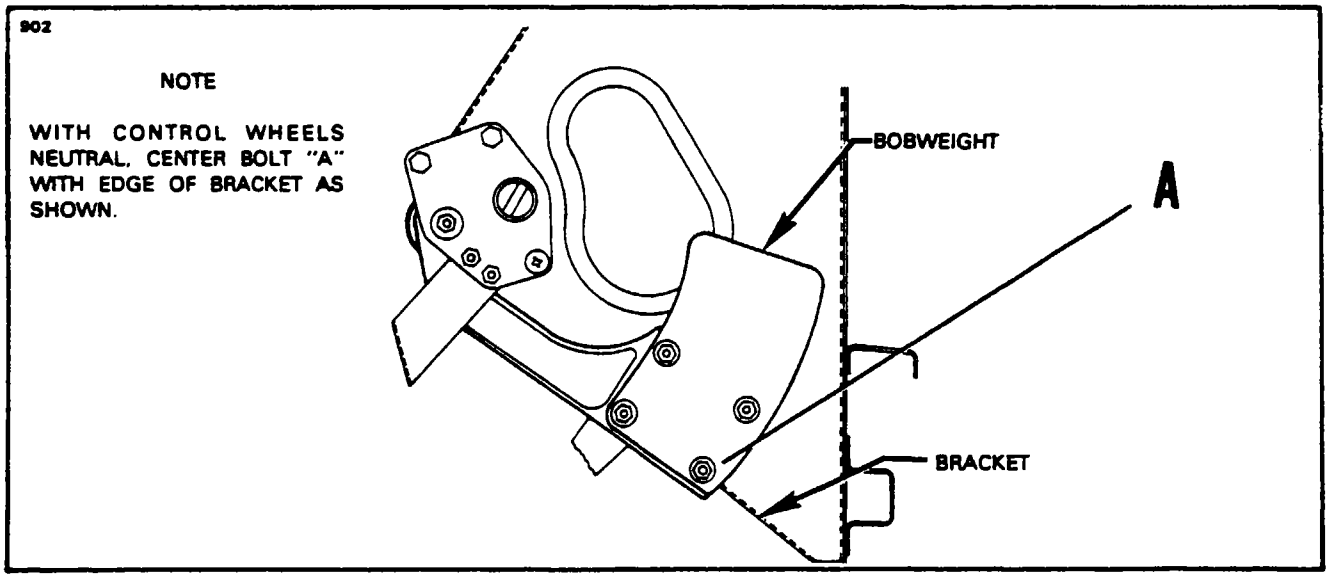

Figure 5-3. Rigging Bobweight

5-8. AILERON CONTROLS.

5-9. REMOVAL OF AILERON CONTROL CABLES. (Refer to Figure 5-4.)

a. Carefully remove the left floor panels located forward of the main spar and the left floor panel behind the main spar.

b. If the right or left balance cable (15 or 22) is to be removed, carefully remove the center floor panel aft of the main spar.

c. Remove the access plates located under the wing, along the trailing edge, at wing station 151.50 and 178 and the aft plate located on the fillet fairing between the fuselage and wing.

d. To remove the right or left primary control cables (16 and 23), the following procedure may be used:

1. Mark one set of cable ends to facilitate installation, and separate the aileron control cables at the turnbuckles (17) within the fuselage.

2. Loosen the turnbuckle, separating the ends at the forward end of the aileron bellcrank.

3. Remove the cable guard pins at wing stations 29 and 150 and within the fuselage at station 164.50 and 168.50. Also remove the fairleads at fuselage.

4. Draw the cable back through the fuselage, through the wing and out through the access hole at the aileron bellcrank.

e. Removal of the right balance cable (15) may be accomplished by the following procedure:

1. Loosen the turnbuckle, separating the turnbuckle ends at the aft end of the aileron bellcrank (1).

2. Separate the right and left balance cables at the cable ends (18) at fuselage station 171.25.

3. If not previously accomplished, remove the cable guard pins at wing stations 29 and 150 and fuselage station 171.25.

4. Draw the cable through the wing into the fuselage.

f. The left balance cable (22) may be removed by the following procedure:

1. Loosen the turnbuckle, separating the turnbuckle ends at the aft end of the aileron bellcrank (24).

2. If not previously accomplished, separate the right and left balance cables at the cable ends (18) at fuselage station 171.25.

3. Remove the access panels on the aft section of the fuselage and disconnect the interconnecting cables (20 and 21) that lead to the rudder cables, at the turnbuckles (26) at station 283.

4. If not previously accomplished, remove the cable guard pins at wing station 29 and 150 and fuselage stations 172.50 and 171.25.

5. Draw the cable from the wing into the fuselage.

6. Removed~e the cable guard pins at fuselage stations 242.50 and 274.92.

7. Draw the interconnecting cables forward through the fuselage.

5-10. INSTALLATION OF AILERON CONTROL CABLES. (Refer to Figure 5-4.)

a. The right or left primary control cables (16 or 23) may be installed by the following procedure:

1. From the access hole at the aileron bellcrank, draw the control cable through the wing into the fuselage and then forward through the fuselage.

2. Connect the control cable turnbuckle ends at the forward end of the aileron bellcrank.

3. Connect the control cable turnbuckle end to the forward control cable turnbuckle within the fuselage.

4. If balance cable is installed, install the cable guard pins at wing stations 29 and 150 and fuselage stations 164.50 and 168.50. Also install the fairleads at fuselage station 137.

b. The right balance cable (15) may be installed by the following procedure:

1. Ascertain that the right and left balance cables (15 and 22) are connected, if the left cable (22) is installed.

2. Draw the cable from the fuselage into the wing and attach the turnbuckle at the aft end of the aileron bellcrank (1).

3. With the aileron primary cable (16) installed, install the cable guard pins at wing stations 29 and 150 and fuselage station 171.25.

c. The left balance cable (22) may be installed by the following procedure:

1. Connect the right and left balance cables at the cable ends (18) at fuselage station 171.25.

2. Draw the interconnecting cables (20 and 21) to the rudder back through the fuselage and connect the cable ends to the rudder takeoff cable ends at the turnbuckles (26) at station 283.

3. Install cable guard pins at fuselage stations 242.50 and 274.92.

4. Draw the balance cable from the fuselage through the wing and attach the turnbuckles at the aft end of the aileron bellcrank (24).

5. Install cable guard pins at fuselage stations 171.25 and 172.50 and within the wing at stations 29 and 150.

d. Set cable tension per Table V-I and check control cable rigging and adjustment per Paragraph 5-11.

e. Install and seal access plates and panels.

5-11. RIGGING AND ADJUSTMENT OF AILERON CONTROLS. (Refer to Figure 5 1.)

a. To rig the aileron controls, set the right and left aileron bellcranks in neutral position by attaching an aligning tool within both wings as shown in Figure 5-5. (This tool may be fabricated from dimensions given in Figure 5-33.) The tool is used by the following procedure:

1. Remove the access plates to the aileron bellcranks at wing station 178.

2. Remove the cotter pin and nut that secures the forward turnbuckles fork end to the bellcrank (1 and 24). The bolt should not be removed.

3. Insert the tool between the bellcrank mounting brackets and over the end of the bolt from which the nut was removed. (It may be necessary to loosen one of the primary control cables or the balance cable.)

4. Position the tool so that it fits tight against the outboard side of the bellcrank stop block (54)

5. Clamp the tool to the lower support bracket with a small "C" clamp. Place a small block of wood or similar material between the clamp and lower bracket so as not to damage the bracket or bend the turned edge that is around the bracket lighting hole.

b. Check or adjust the aileron for neutral position by the following procedure:

1. Place a modified straightedge, as shown in Figure 5-6 against the underside of the wing, next to and outboard of the row of rivets at station 189 with the aft end of the tool even with the trailing edge of the aileron. (This tool may be fabricated from dimensions given in Figure 5-32.) Do not place tool over rivets.

2. With the bellcrank in neutral and the forward edge of the tool and spacer contacting the wing, the trailing edge of the aileron should make contact with the aft end of the tool.

3. Should the three points not contact, loosen the jam nuts (45 and 51) of the control rod ends (44 and 50) and rotate the rod (25) until the three contact points touch the skin surfaces. Tighten the rod end locknuts.

c. With the bellcrank in neutral position, adjust cable tension as given in Table V-I to maintain neutral center alignment of control wheels. Carefully remove the floor panel to the left of the control pedestal. Alternately adjust the primary and balance cable turnbuckles (2) at the bellcranks with the turnbuckles (17) within the fuselage. Cable tension should be taken at the non-rigid primary control cable. Safety turnbuckles.

d. To adjust the interconnecting cables between the aileron and rudder cables, first ascertain that the cable tension has been set for both the aileron and rudder cables. Ascertain that the aileron and rudder controls and surfaces are neutral, then remove the access panel at the aft section of the fuselage and adjust the interconnecting cable turnbuckles (26) at station 283 so that the springs (28) will extend .060 of an inch from their relaxed position.

e. Place a bubble protractor on the inboard section of the aileron and establish neutral or zero on the protractor. Remove the tools holding the aileron bellcranks in neutral; replace the nuts and safety them. Adjust the bellcrank stop bolts (52) to the specific aileron travel from neutral as given in Table V-I. Stops of both bellcranks should contact their stop blocks at the same time and before the control wheel contacts its stops.

NOTE

If provisions are provided for safety wiring the nut and screw on the aileron bellcrank assembly, safety wire with MS20995-C32 as shown in Figure 5-10.

f. Check control operation, bolts and turnbuckles for safety and installation of cable guard pins.
g. Install access plates and panels.

5-12. REMOVAL OF AILERON BELLCRANK ASSEMBLY. (Refer to Figure 5-4.)

a. Remove the access plate to the bellcrank assembly.
b. Relieve cable tension from the control system by rotating one of the turnbuckles (2) attached to the bellcrank (1 or 24).
c. Disconnect the turnbuckle ends (47 and 48) from the forward and aft ends of the bellcrank (1 or 24).
d. Disconnect the aileron control rod (25) at the bellcrank.
e. Remove the pivot bolt (55) securing the bellcrank and remove the bellcrank from the wing.
f. The stop block (54) may be removed by unbolting and removing from the wing.

5-13. INSTALLATION OF AILERON BELLCRANK ASSEMBLY. (Refer to Figure 5-4.)

a. Place the bellcrank (1 or 24) in its mounting bracket with the adjustable stops toward the outboard end of the wing.
b. Install the pivot bolt (55) and torque.
c. Install the aileron control rod (25), secure bolt assembly (49) and safety.
d. Connect the turnbuckle ends (47 and 48) to the bellcrank (1 or 24), secure and safety.

NOTE

The aft end of the bellcrank and balance cable end is painted red to help facilitate proper hookup. Do not tighten turnbuckle fork ends on bellcrank so tight that the ends cannot rotate.

e. Install stop block (54) and torque bolts.
f. Check aileron rigging and adjustment as per Paragraph 5-11.
g. Install access plate and secure.

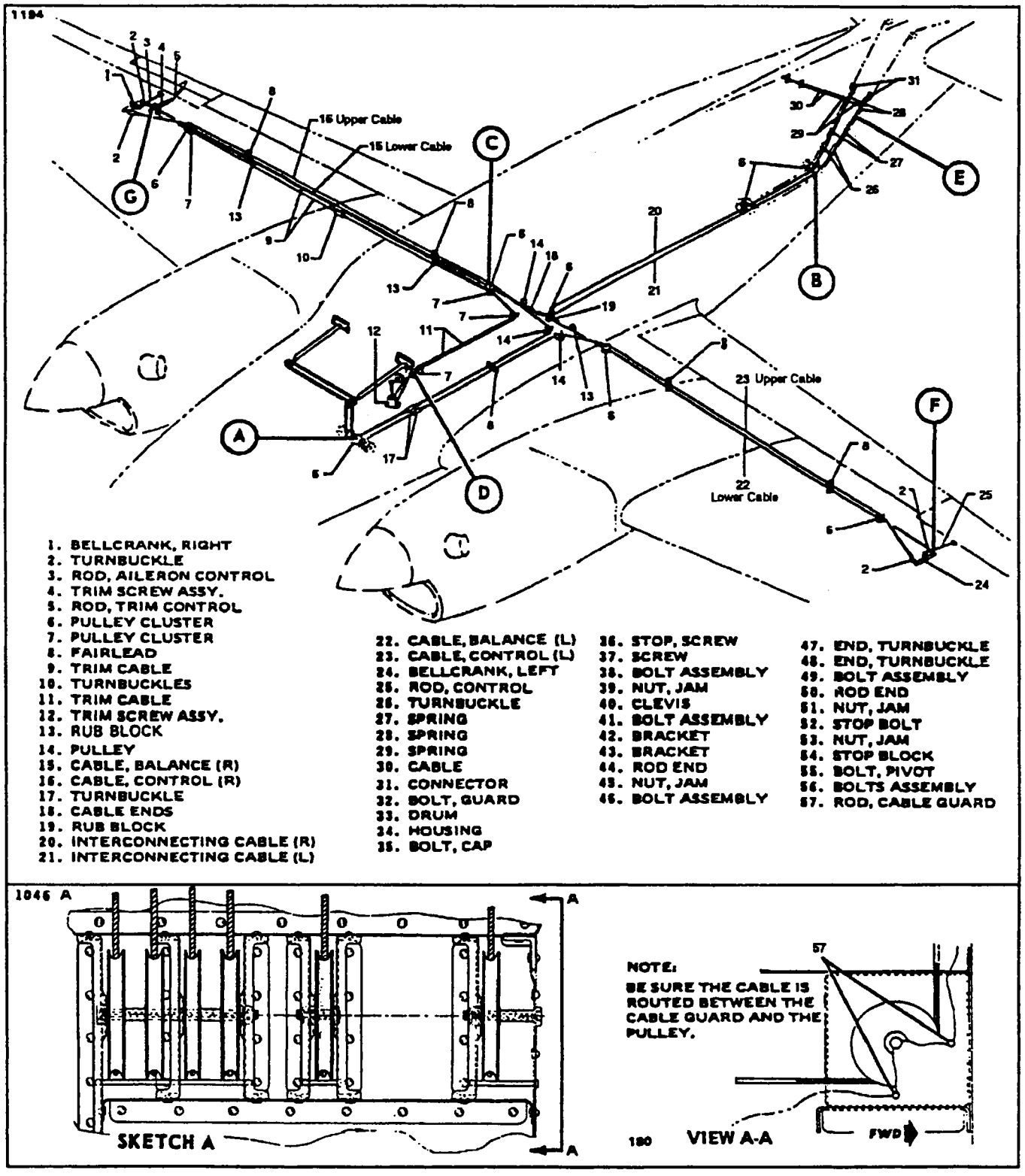

Figure 5-4. Aileron and Aileron Trim Controls

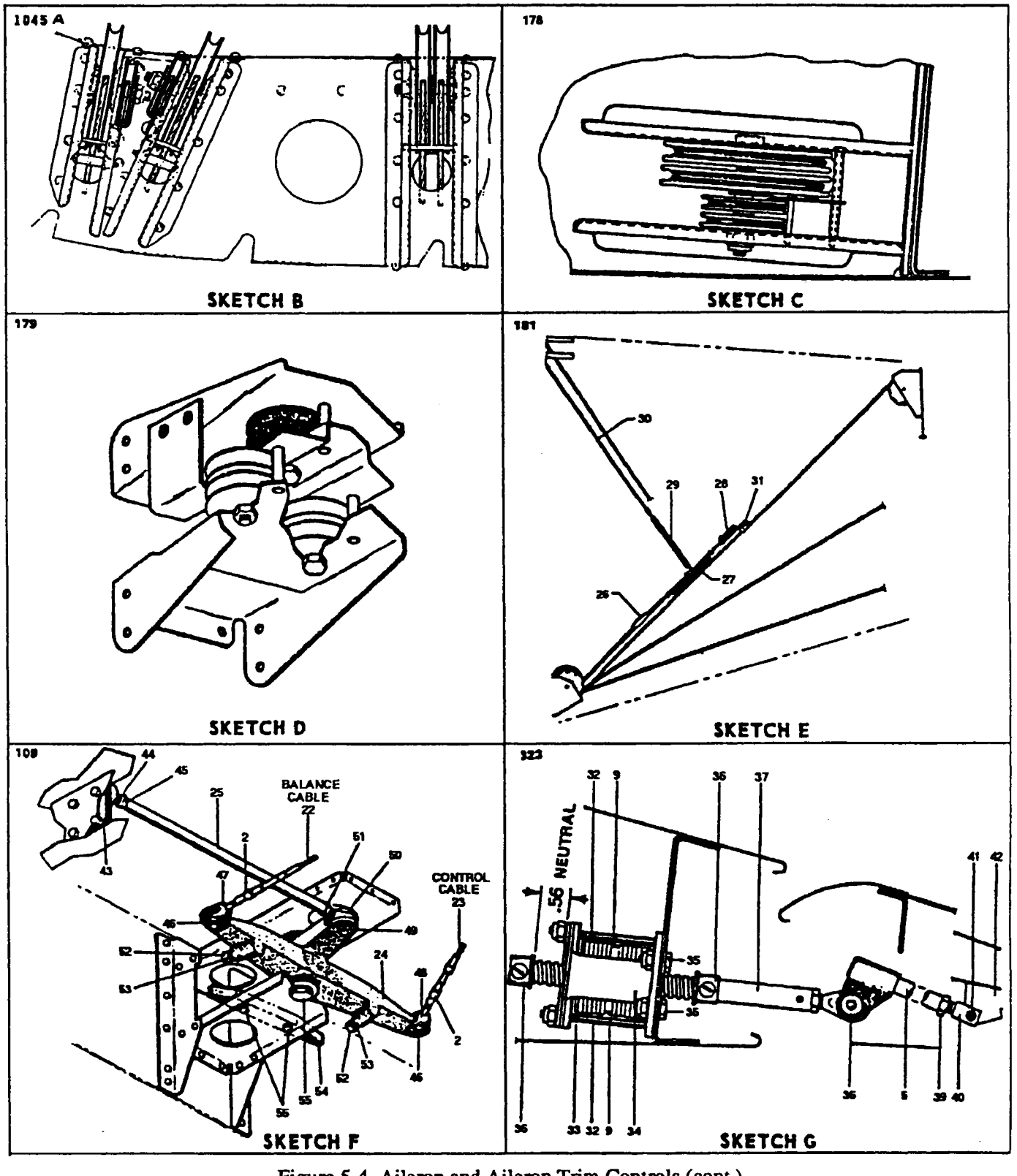

Figure 5-4. Aileron and Aileron Trim Controls (cont.)

5-14. AILERON TRIM CONTROLS.

5-15. REMOVAL OF AILERON TRIM ASSEMBLY (FUSELAGE). (Refer to Figure 5-4.)

NOTE

Fuselage station reference points are provided in order to facilitate the location of various components in the PA-31T, PA-31T1 and PA-31T2. Subtract 24 inches for all station points forward of fuselage station 135 for the PA-31T2, to find the proper location of various components in this aircraft.

a. Remove the right and left pilot's seat and the right row of seats within the cabin.

b. Carefully remove the floor panel aft of the control pedestal, and the right panels fore and aft of the main spar.

c. Relieve cable tension from the aileron cables by loosening one of the turnbuckles (17) in the fuselage at station 100.

d. Remove the aft access plate on the right fillet fairing located between the fuselage and wing. Remove the aileron and aileron trim pulleys in the wing at station 29.

e. Remove the outboard access plate located on the aft side of the wheel well. Remove one screw from each set of rub blocks at wing station 58.50 and 121.50; then open the blocks enough to allow the cable ends to pass through.

f. Remove the access plate on the underside of the wing at the trailing edge at station 92.50.

g. Block the trim cables at the screw assembly below the control pedestal and within the wing at station 96.50 to prevent cables from unwrapping from their drums by one of the methods shown in Figure 5-11. (If the trim assembly within the wing is also being removed, then remove the access plates at wing station 171 and block the cables at the trim screw assembly.)

h. Mark one set of cable ends within the wing at station 90 to facilitate installation and disconnect the cables at the turnbuckles (10).

i. Remove the pulleys within the fuselage at station 102 and the cable guard pins at stations 125.21 and 163.50.

j. Remove the pin holding the shafts together then unbolt the screw assembly from the mounting bracket and remove the screw assembly, drawing the cables from the wing and fuselage.

5-16. INSTALLATION OF AILERON TRIM ASSEMBLY (FUSELAGE). (Refer to Figure 5-4.) (See Note in 5-15.)

a. Ascertain that the cable is evenly wrapped on the trim drum (centered) and blocked to prevent unwrapping. (Refer to Wrapping the Trim Drum.)

b. Position the screw assembly (12) below, the pedestal on the mounting bracket and secure with bolts, washers and nuts.

c. Draw the cable (11) through the fuselage and into the wing.

d. Install the cable pulleys in the fuselage at station 102 and secure.

e. Install the aileron and aileron trim pulleys in the wing at station 29.

f. Set the aileron cable tension per Table V-I and check rigging and adjustment per Paragraph 5-11.

g. If the trim cables (9) from the screw assembly (4) within the wing are installed, connect the cable ends at the turnbuckles (10) at wing station 90. (If the trim assembly within the wing is not installed, pull the cables tight and block them, reaching through the access opening in the wing at station 92.50.)

h. With the cables connected, install the cable guard pins at fuselage stations 125.21 and 163.38.

i. Close the rub blocks within the wing at station 58.50 and 121.50 and secure.

j. Remove the cable blocks.

k. Install and seal the floor panels.

l. Set cable tension with the turnbuckles (10) in the wing at station 90 per Table V-I and check rigging and adjustment per paragraph 5-19.

m. Install access plates and panels on the fuselage under the wing and in the wheel well and install seats.

5-17. REMOVAL OF AILERON TRIM ASSEMBLY (WING). (Refer to Figure 5-4.)

a. Remove the access plates located under the wing along the trailing edge at stations 92.50, 117.50, 151.50 and 171.

b. Disconnect the trim control rod (5) located between the trim screw (37) and tab, at the screw.

c. Block the trim cables to prevent them from unwrapping their drums at the screw assembly and within the wing at station 87.50 by one of the methods shown in Figure 5-11.

d. Mark one set of cable ends at station 90 to facilitate installation and disconnect the cables at the turnbuckles (10).

e. Reach through the access opening at station 117.50, remove one screw from each set of rub blocks and open the blocks enough to allow the cable ends to pass through.

f. Remove the cable guard pin within the wing at station 150.

g. Remove the bolts (35) that secure the screw assembly to the rear spar and remove the assembly from the wing.

5-18. INSTALLATION OF AILERON TRIM ASSEMBLY (WING). (Refer to Figure 5-4.)

a. Ascertain that the trim cable assembly is evenly wrapped (centered) on the drum, the drum is centered between the stops on the trim screw and the cables are blocked to prevent them from unwrapping.

b. Position the screw assembly in the wing, install the attachment bolts (35) and torque 20-25 in.-lbs.

c. Draw the cables through the wing and connect them at the turnbuckles (10) at station 90. (If the cables from the fuselage are not installed, block the cables at the rib at station 87.50 by reaching through the access opening at station 92.50.)

d. Remove the cable blocks from next to the trim screw assembly and from the cables leading from the fuselage.

e. Connect the control rod (5) to the trim screw (37).

f. Install the cable guard pin at station 150.

g. Close the rub blocks at station 121.50 and secure.

h. If the complete cable system is installed, set cable tension with the turnbuckles (10) at station 90 per Table V-I and check rigging and adjustment per Paragraph 5-19.

i. Install and seal access plates.

5-19. RIGGING AND ADJUSTMENT OF AILERON TRIM. (Refer to Figure 5-4.)

a. To adjust the aileron trim, it must be ascertained that the following has been accomplished either during installation or as a preadjustment check:

1. The trim cables are evenly wrapped (centered) on their drums, both below the control pedestal and in the wing, and both cable turnbuckles (10) are located approximately at wing station 90.

2. That the trim drum (33) in the wing is centered between the stops of the trim screw (37).

3. The cable tension is set in accordance with Table V-I.

b. Remove the access plates on the underside of the right wing at stations 92.50 and 171.

c. With the trim screw (37) held from rotating, turn the trim drum (33) until .560 of an inch exists between the forward screw stop and the drum housing (34), as measured along the screw. (Neutral position of the screw is at this measurement.)

d. With the trim screw in neutral position, the trailing edges of the tab and aileron should align. Should they not, remove the bolt (41) from the aft end of the trim control rod (5) and adjust the rod end until the trailing edges align. Reinstall bolt (41) and tighten it so that the bushing will not rotate, then secure.

e. Turn the trim in each direction, to screw stops, to check the tab angles as given in Table V-I and also check the minimum number of cable wraps left on the drum. (Minimum allowable is one and one quarter turns.)

f. Check the adjustment of trim indicator per instructions given in this section.

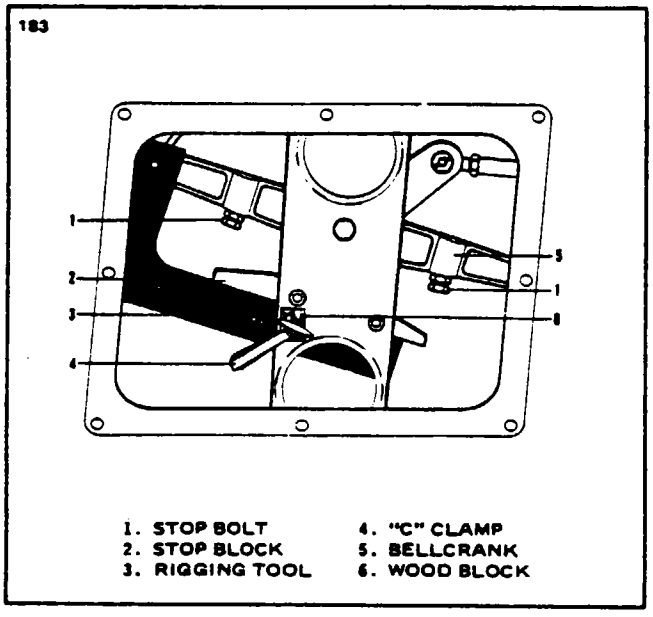

Figure 5-5. Installation of Bellcrank Rigging Tool

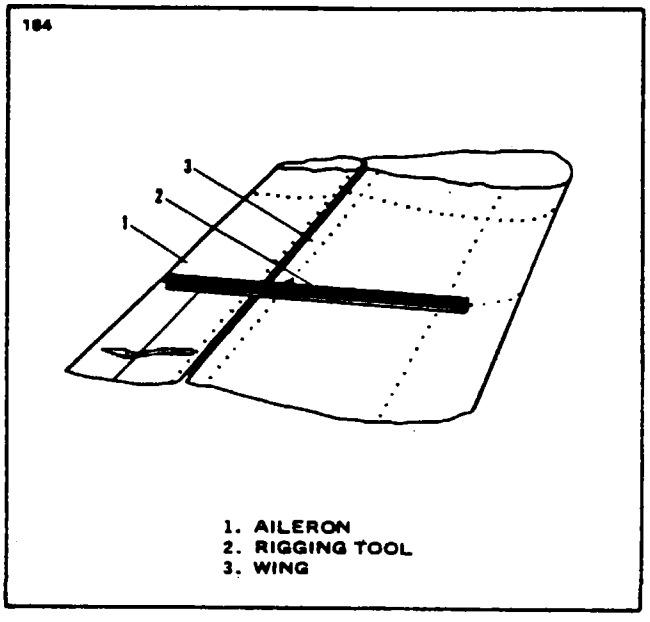

Figure 5-6. Installation of Aileron Rigging Tool

5-20. ELEVATOR CONTROLS.

NOTE

Any time service is accomplished on the elevator control system, a friction check must be made to insure system friction is within limits. (Refer to Paragraph 4-96, Section IV.)

5-21. REMOVAL OF ELEVATOR CONTROL CABLES. (Refer to Figure 5-7.)

NOTE

Fuselage station reference points are provided in order to facilitate the location of various components in the PA-31T, PA-31T1 and PA-31T2. Subtract 24 inches for all station points forward of fuselage station 135 for the PA-31T2, to find the proper location of various components in this aircraft.

CAUTION

Exercise care that the elevator control tube does not incur nicks, dents or deep scratches during installation, removal or rigging operations. Visually reinspect the elevator control tube each time it is removed or reinstalled in the aircraft. (Refer to the latest revision of Piper Service Bulletin No. 715.)

a. To remove control cables (1 and 2) that connect between the elevator control sector and the aft control cables (10 and 11), beginning at fuselage station 110.50, the following procedure should be used:

1. Remove the left pilot's seat and carefully remove the floor panel located on the left of the control pedestal.

2. Mark one set of cable ends to facilitate installation and disconnect the cables at turnbuckles (3) at station 110.50.

3. Remove the cable guard pins at the forward pulley cluster at station 83.34.

4. The inboard (right) cable (1) may be removed by removing the three cable guard pins at the control sector and pulley, disconnecting it from the lower end of the sector and drawing it aft, around the pullevs.

5. The outboard (left) cable (2) may be removed by removing the cable guard pin at the control sector (if not previously removed, when removing the inboard cable), disconnecting it from the upper end of the sector and drawing it aft, around the pulley.

b. To remove the control cables (10 and 11) that route aft, beginning from fuselage station 110.50 to the elevator bellcrank (14), the following procedure may be used:

1. Remove the left pilot's seat and the left and right row of seats in the fuselage.

2. Remove the floor panel to the left of the control pedestal, the left panels fore and aft of the main spar, and the center panels aft of the main spar back to station 244.

3. Remove the left or right access plate located on the aft section of the fuselage.

4. Mark one set of cable ends to facilitate installation and disconnect the cables at the turnbuckles (3) at station 110.50.

5. Mark and disconnect the cables (10 and 11) from the elevator bellcrank (14).

6. To remove the cable (10) that leads to the upper end of the elevator bellcrank (right cable), remove the cable guard pins at stations 121.38, 153.35, 192, 242 and 276.

7. To remove the cable (11) that leads to the lower end of the bellcrank (left cable), remove the cable guard pins at stations 121.38, 160.20, 203, 242 and 276.

8. Remove the fairleads at fuselage station 137.

9. Draw the cables aft through the fuselage.

5-22. INSTALLATION OF ELEVATOR CONTROL CABLES. (Refer to Figure 5-7.)

NOTE

Fuselage station reference points are provided in order to facilitate the location of various components in the PA-31T, PA-31T1 and PA-31T2. Subtract 24 inches for all station points forward of fuselage station 135 for the PA-31T2, to find the proper location of various components in this aircraft.

CAUTION

Exercise care that the elevator control tube does not incur nicks, dents or deep scratches during installation, removal or rigging operations. Visually reinspect the elevator control tube each time it is removed or reinstalled in the aircraft. (Refer to the latest revision of Piper Service Bulletin No. 715.)

a. The control cables (1 and 2) that connect between the elevator control sector and the aft control cables (10 and 11) may be installed by the following procedure:

1. The left cable (1) may be installed by drawing the cable forward from fuselage station 110.50, around the forward pulley cluster at station 83.34, upward and attach it to the upper end of the control sector.

2. The right cable (2) may be installed by drawing the cable forward from the fuselage station 110.50, around the forward pulley cluster at station 83.34, upward and over the pulley above the control column and attach it to the lower end of the control sector.

3. If aft control cables (10 and 11) are installed, connect the cables at station 110.50.

4. Install cable guard pins at forward pulley cluster.

1. CONTROL CABLE (FWD R)
2. CONTROL CABLE (FWD L)
3. TURNBUCKLE
4. PULLEY CLUSTER
5. PULLEY CLUSTER
6. TRIM CABLE
7. FAIRLEAD
8. PULLEY
9. RUB BLOCK
10. CONTROL CABLE
11. CONTROL CABLE
12. TURNBUCKLE
13. TRIM CABLE
14. BELLCRANK
15. ROD, CONTROL
16. ELEVATOR DOWN SPRING (SAS) - PA-31T ONLY
17. SERVO MOTOR - PA-31T ONLY
18. ARM, ELEVATOR
19. TRIM SCREW ASSY., LEFT
20. BOLT ASSEMBLY
21. CABLE END
22. BOLT ASSEMBLY
23. BOLT ASSEMBLY
24. BOLT, PIVOT
25. PULLEY
26. ROD END
27. BOLT ASSEMBLY
28. JAM NUT
29. TRIM SCREW ASSY.
30. ELEVATOR TORQUE TUBE
31. PULLEY CLUSTER
32. TRIM CABLE
33. GUIDE BRACKET
34. TRIM SCREW CLEVIS
35. BUSHING
36. TRIM TAB ROD
37. BOLT ASSEMBLY
38. ROD END
39. ROD, CABLE GUARD
40. CENTER CABLE
41. TURNBUCKLE

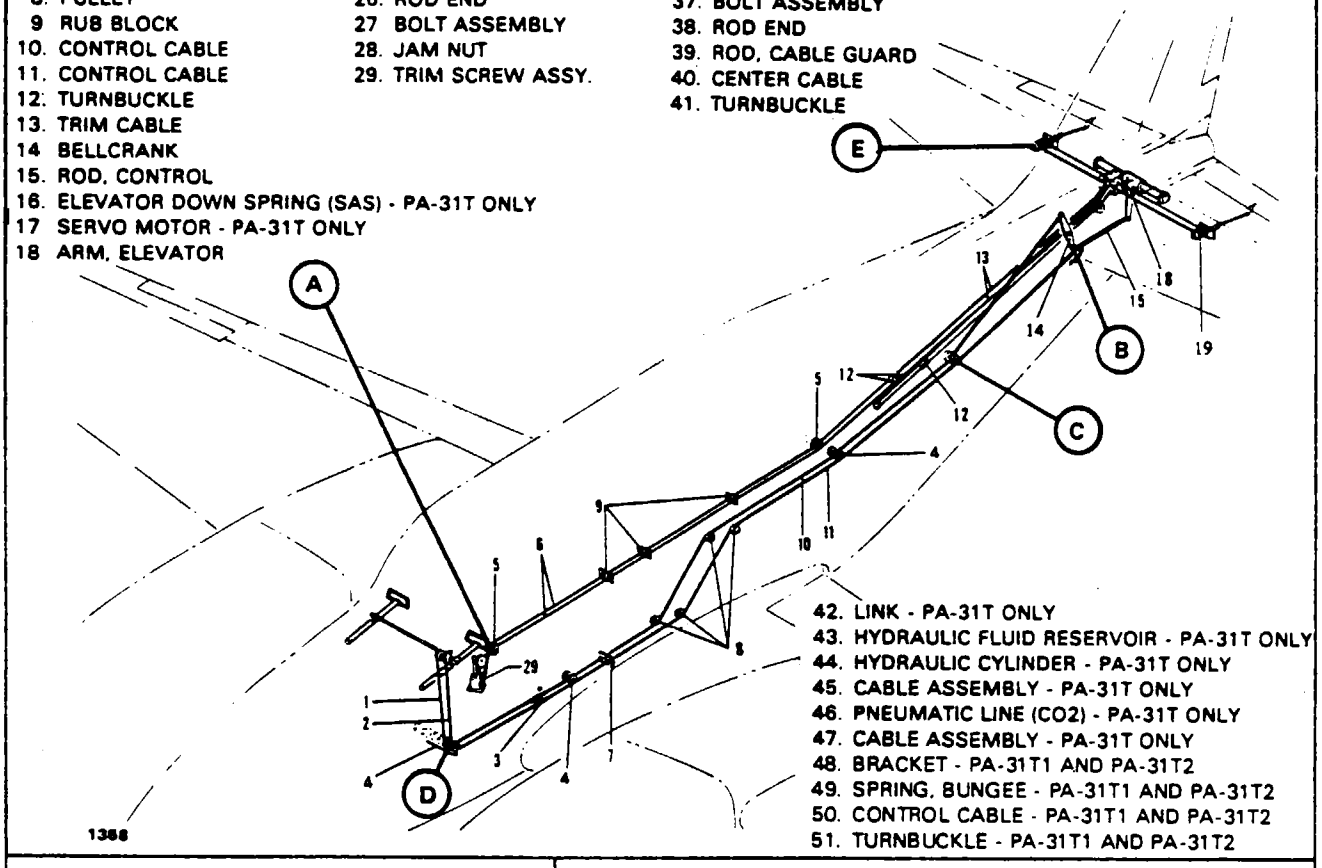

42. LINK - PA-31T ONLY
43. HYDRAULIC FLUID RESERVOIR - PA-31T ONLY
44. HYDRAULIC CYLINDER - PA-31T ONLY
45. CABLE ASSEMBLY - PA-31T ONLY
46. PNEUMATIC LINE (CO2) - PA-31T ONLY
47. CABLE ASSEMBLY - PA-31T ONLY
48. BRACKET - PA-31T1 AND PA-31T2
49. SPRING, BUNGEE - PA-31T1 AND PA-31T2
50. CONTROL CABLE - PA-31T1 AND PA-31T2
51. TURNBUCKLE - PA-31T1 AND PA-31T2

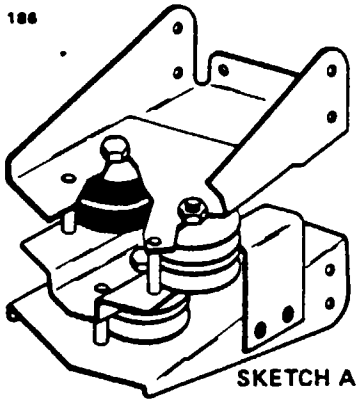

SKETCH A

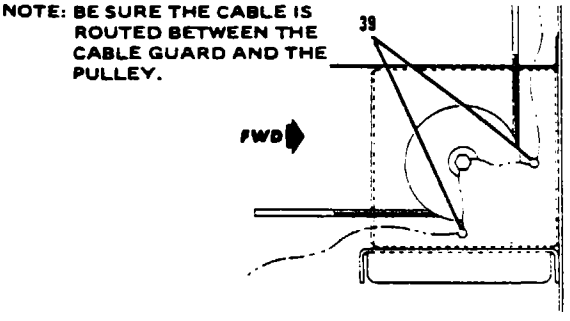

VIEW A-A

40880 51436 51770

Figure 5-7. Elevator and Elevator Trim Controls

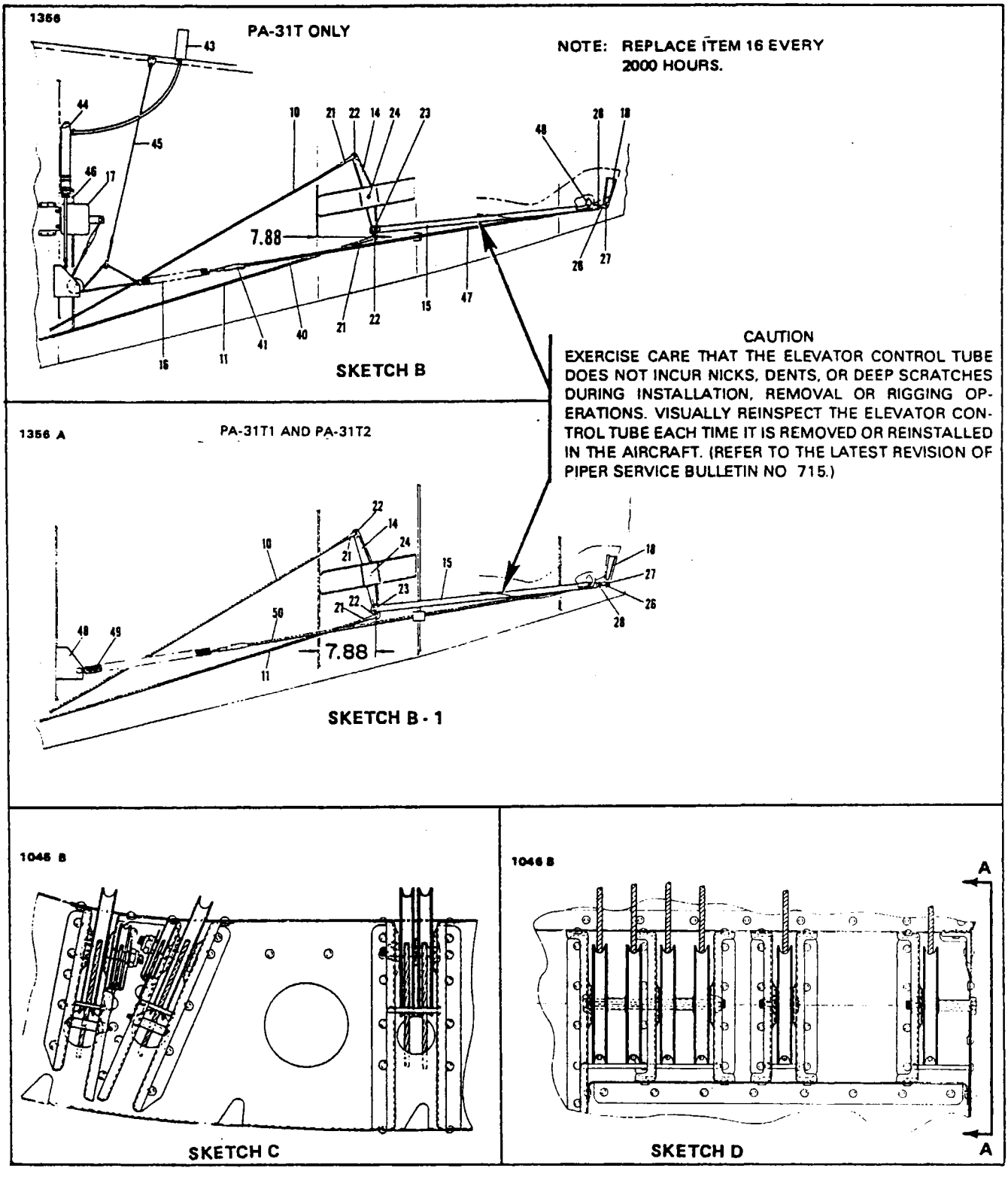

Figure 5-7. Elevator and Elevator Trim Controls (cont.)

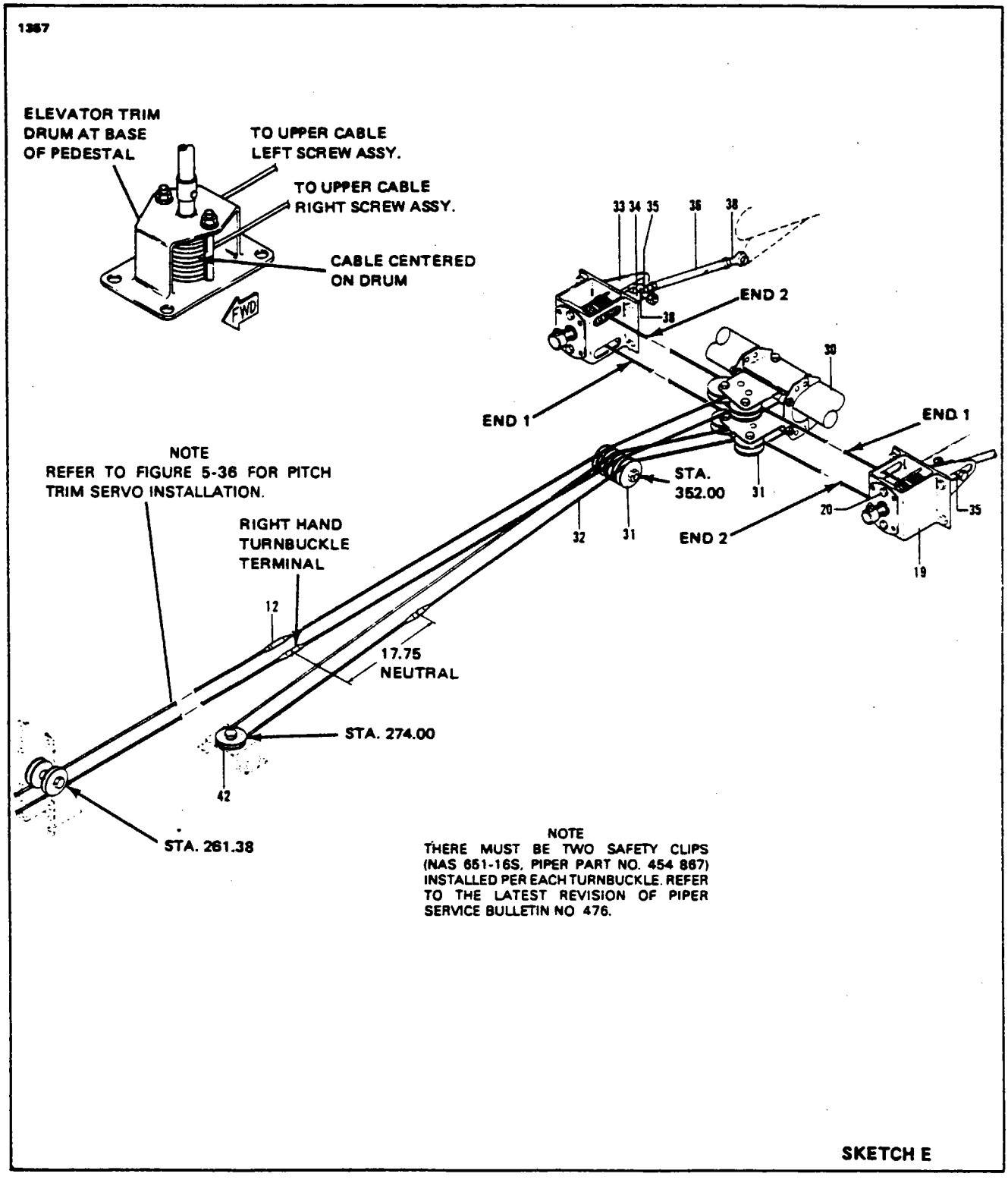

Figure 5-7. Elevator and Elevator Trim Controls (cont.)

b. The control cables (10 and 11) that go aft, beginning at fuselage station 110.50 to the elevator bellcrank, may be installed by the following procedure:

1. Connect the cables (10 and 11) to the elevator bellcrank (14), ascertain that cable (10) is connected to the top of the bellcrank.
2. Draw the cables forward through the fuselage as shown in Figure 5-7.
3. Connect the cables (10 and 11) to the forward cables (1 and 2) at station 110.50.
4. Install the cable guard pins for cable (10) at stations 121.38, 153.35, 192, 242 and 276.
5. Install the cable guard pins for cable (11) at stations 121.38, 160.20, 203, 242 and 276.
6. Install fairleads at fuselage station 137.

c. Adjust the cable tension at station 110.50 in accordance with cable tensions given in Table V-I and rigging and adjustment per Paragraph 5-23.

d. Install and seal access plates and panels, and install seats.

5-23. RIGGING AND ADJUSTMENT OF ELEVATOR CONTROLS. (Refer to Figure 5-7.)

CAUTION

Exercise care that the elevator control tube does not incur nicks, dents or deep scratches during installation, removal or rigging operations. Visually reinspect the elevator control tube each time it is removed or reinstalled in the aircraft. (Refer to the latest revision of Piper Service Bulletin No. 715.)

a. Ascertain that the left pilot's seat, the floor panel to the left of the control pedestal, an access plate on the side of the fuselage under the horizontal stabilizer and tail cone are all removed.

b. Put the elevator in neutral position by placing a modified straightedge as shown in Figure 5-8, against the underside of the horizontal stabilizer, next to and outboard of the row of rivets at station 38 with the aft end of the tool even with the trailing edge of the elevator. (This tool may be fabricated from dimensions given in Figure 5-32.)

c. With the elevator in neutral position, check or adjust the elevator bellcrank (14) for neutral. The bellcrank is neutral when the center of the forward attachment bolt (23) of the elevator control rod (15) is 7.88 inches when measured perpendicular from the bulkhead at station 317.75. Obtain this setting by turning the control rod end (26) to the desired length and secure with jam nut (28).

d. With the elevator bellcrank in neutral position, adjust the turnbuckles (3) to obtain cable tensions as given in Table V-I. Measure the cable tensions near the turnbuckles used to adjust the tension. Allow the control wheel to neutralize fore and aft. The neutral position of the control wheel is 3.5 inches aft of the full forward position measured along the underside of the control column from the face of the instrument panel to the center of the control wheel.

NOTE

Hold up or place a block under bobweight prior to checking cable tension.

e. With the elevator neutral, place a bubble protractor on the elevator and establish neutral or zero on the protractor. Move the elevator up until the control arm contacts its stop. (Refer to Figure 5-9.) Check the up travel as given in Table V-I. Adjust the stop screw in or out to obtain proper adjustment: Move the elevator down and check and adjust by the same method. After completion of rigging torque the screw locknuts to 20 to 40 inch pounds and seal with SENTRY SEAL. The elevator control arm should contact its stops before the control wheel contacts its stops.

NOTE

If provisions are provided for safety wiring the nut and screw on the elevator hinge assembly, safety wire with MS20995-C32 as shown in Figure 5-10. The lock wire should always be installed and twisted so that the loop around the head stays down and does not tend to come up over the bolt head and leave a slack loop.

NOTE

The elevator down spring (SAS) (16) must be replaced after 2000 hours of operation. (Refer to Figure 5-7, Sketch B.)

f. On the PA-31T only, adjust the turnbuckle (41) to obtain 23 ± 1 pounds tension on earlier models and 10 ± 1 pounds tension on models with serial numbers 31T-7920053, 31T-8020001 and up, with the servo unit arm in the full down position or relaxed position, the elevator down and the control wheel full forward against the stop. Check tension just below the turnbuckle (41). (Refer to Figure 5-7, also refer to Section XI for stability system checks and adjustments.)

g. "TOTAL FRICTION" in the PA-31T elevator control system shall not be in excess of 10 pounds on earlier models and 11 pounds on models with serial numbers 31T-7920053, 31T-8020001 and up, with the arm on SAS actuator full down and elevator in neutral position.

NOTE

The complete elevator control system (including autopilot if installed) shall be rigged to its proper travels and cable tensions prior to determining the friction in the system. (Refer to Paragraph 5-32.)

h. On the PA-31T1 only, adjust the turnbuckle (51) to obtain 43 ± 1 pounds tension and on the PA-31T2 only, 48 ± 1 pounds tension on the elevator control spring, with elevator in neutral position. "TOTAL FRICTION" in the PA-31T1 and PA-31T2 elevator control system shall not exceed 11 pounds.

i. Check control operation and direction of travel; bolts and turnbuckles for safety and installation of cable guards.

j. Check the complete elevator control system (including autopilot) to determine the friction in the system.

k. Install and seal access plates and panels and install tail cone and seats.

5-24. REMOVAL OF ELEVATOR BELLCRANK ASSEMBLY. (Refer to Figure 5-7.)

CAUTION

Exercise care that the elevator control tube does not incur nicks, dents or deep scratches during installation, removal or rigging operations. Visually reinspect the elevator control tube each time it is removed or reinstalled in the aircraft. (Refer to the latest revision of Piper Service Bulletin No. 715.)

a. Remove the left pilot's seat and the floor panel located to the left of the control pedestal.

b. Remove the access plates on the side of the fuselage and under the horizontal stabilizer and remove the tail cone.

c. Relieve the cable tension from the control system by loosening one of the cable turnbuckles (3) and the turnbuckle (41 or 51) on the elevator control cable (40 or 50).

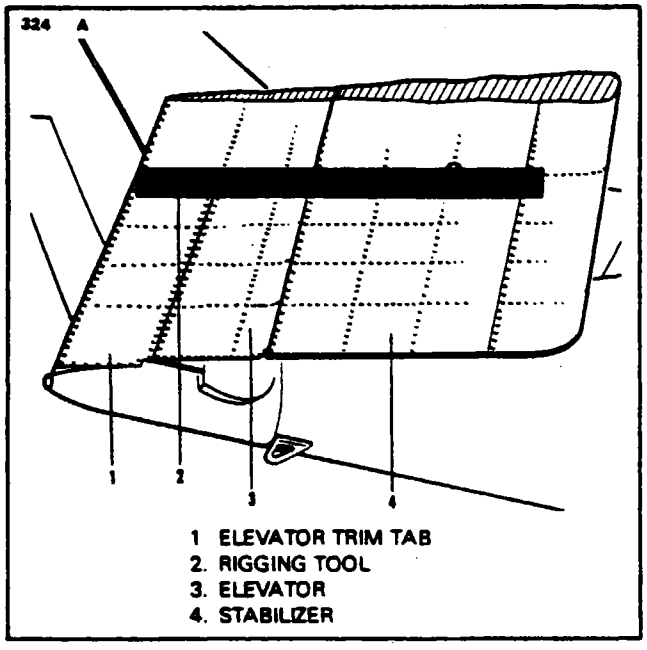

Figure 5-8. Installation of Elevator Rigging Tool

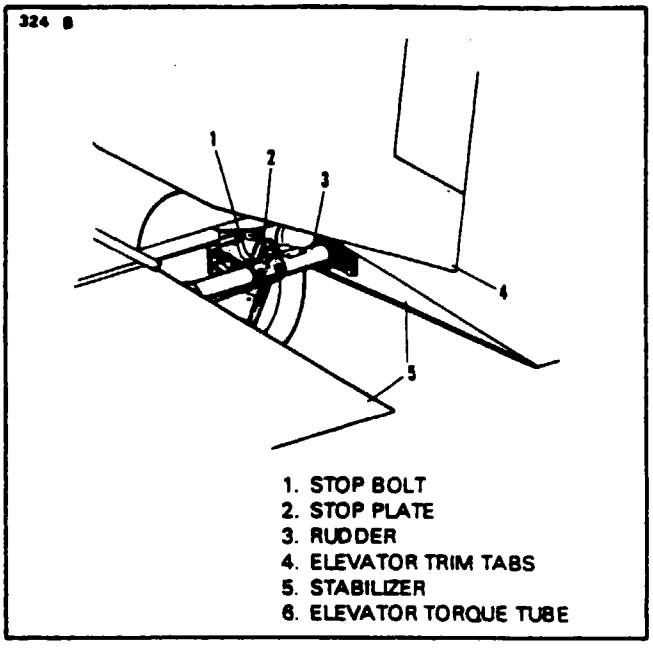

Figure 5-9. Elevator Travel Stops

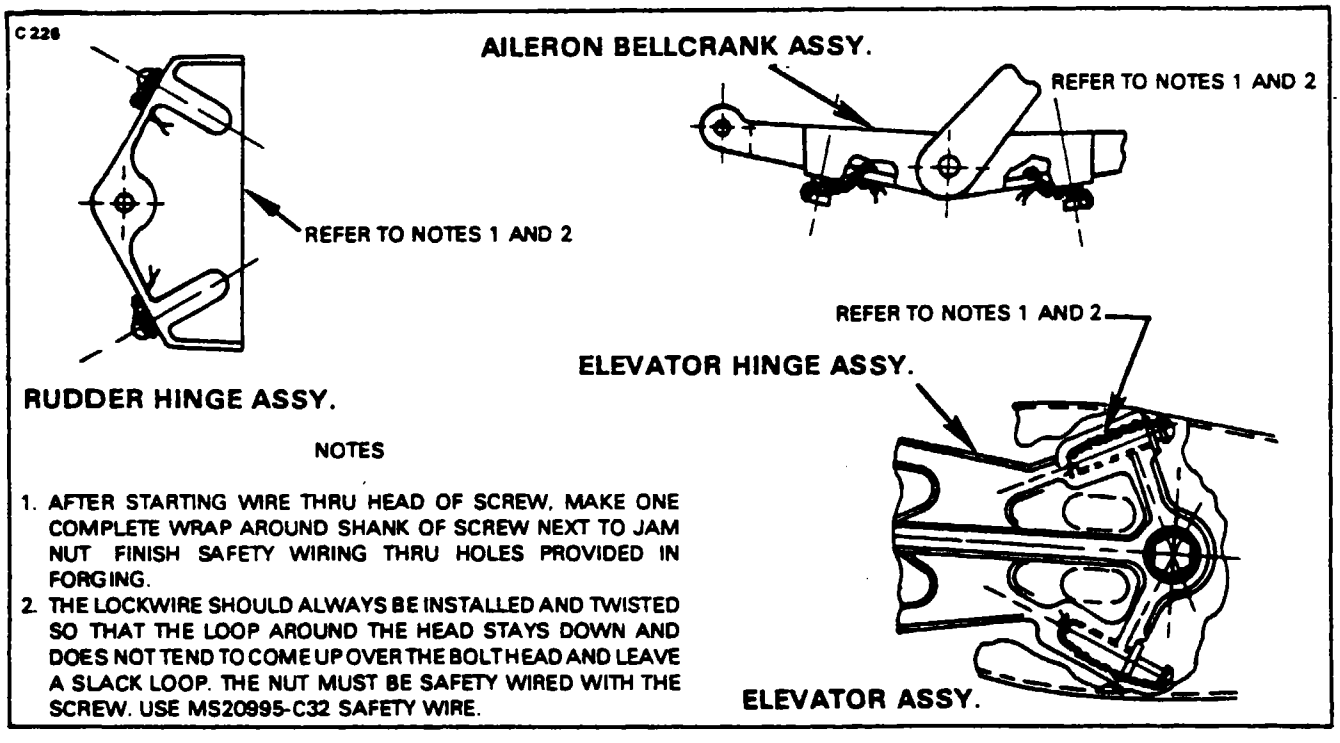

Figure 5-10. Safety Wiring

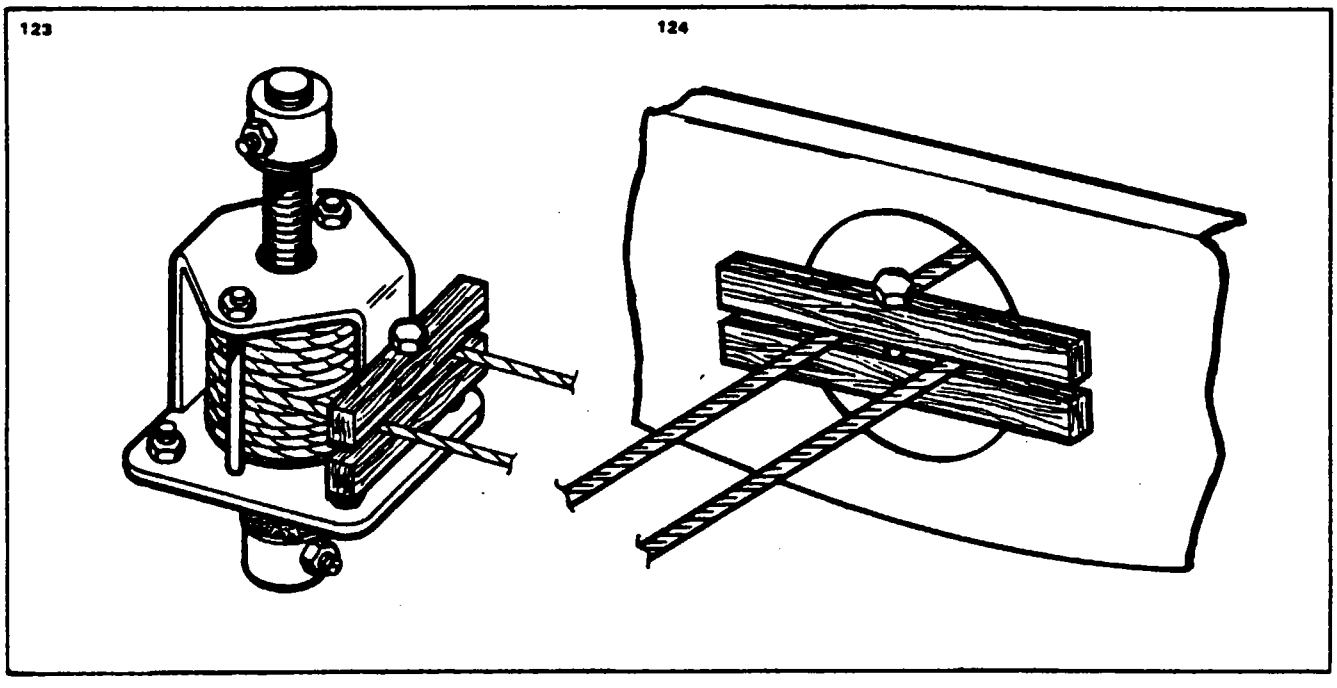

Figure 5-11. Methods of Blocking Trim Cables

d. Disconnect the elevator control cables (10 and 11) at the bellcrank (14).
e. Disconnect the elevator control rod (15) from the elevator bellcrank (14).
f. Remove the pivot bolt (24) and remove the bellcrank from its mounting bracket.

5-25. INSTALLATION OF ELEVATOR BELLCRANK ASSEMBLY. (Refer to Figure 5-7.)

CAUTION

Exercise care that the elevator control tube does not incur nicks, dents or deep scratches during installation, removal or rigging operations. Visually reinspect the elevator control tube each time it is removed or reinstalled in the aircraft. (Refer to the latest revision of Piper Service Bulletin No. 715.)

a. Position the bellcrank (14) in its mounting bracket; lubricate and install pivot bolt (24) and torque to 60 to 85 inch-pounds.
b. Attach the control rod (15) to the bellcrank and secure.
c. Connect the control cables (10 and 11) to the bellcrank. Check to be sure cable (10) is connected to the top of the bellcrank. Tighten bolts (22) so that the cable ends (21) may turn freely on the bellcrank and safety.
d. Connect the elevator control cable (40 or 50) to the elevator bungee spring (16 or 49).
e. Check cable tension per Table V-I, and rigging and adjustments as given in Paragraph 5-23.

5-26. ELEVATOR TRIM CONTROLS.

NOTE

See applicable AutoPilot System vendor publication and/or the CIP drawing (Custom Avionics List) delivered with the aircraft.

5-27. REMOVAL OF FORWARD ELEVATOR TRIM ASSEMBLY. (Refer to Figure 5-7.)

NOTE

Fuselage station reference points are provided in order to facilitate the location of various components in the PA-31T, PA-31T1 and PA-31T2. Subtract 24 inches for all station points forward of fuselage station 135 for the PA-31T2, to find the proper location of various components in this aircraft.

a. Remove the right pilot's seat and the right row of passenger seats.
b. Carefully remove the floor panel located aft of the control pedestal, the right panel forward of the main spar, the right panels off of the main spar, and the aft baggage area.
c. Block the forward trim cables (6) at the trim screw assembly below the control pedestal and the aft cables (13) at bulkhead 317.75, to prevent the cables from unwrapping from their drums, by one of the methods shown in Figure 5-11. (If the aft screw assembly (19) is also to be removed, then remove the access plate attached to the underside of the horizontal stabilizer and block the cables at the screw assembly instead of in the fuselage.)
d. Mark the cable ends within the fuselage at stations 291 and 308.75 to facilitate installation. Disconnect the cables at the turnbuckles (12).
e. Remove the cable guard pins at fuselage stations 125, 243.25 and 262.
f. Remove one screw from each set of rub blocks at stations 137, 162.60, 174 and 215, and open them far enough to allow the cable ends to pass through.
g. Slide the bushing up the shaft to separate the two halves of the trim screw assembly.
h. Remove the bolts that attach the screw assembly to the mounting bracket and draw the assembly with the cables from the fuselage.

5-28. INSTALLATION OF FORWARD ELEVATOR TRIM ASSEMBLY. (Refer to Figure 5-7.)

NOTE

Fuselage station reference points are provided in order to facilitate the location of various components in the PA-31T, PA-31T1 and PA-31T2. Subtract 24 inches for all station points forward of fuselage station 135 for the PA-31T2, to find the proper location of various components in this aircraft.

a. Ascertain that the cable is evenly wrapped on the trim drum (centered) and blocked to prevent unwrapping. (Refer to Wrapping the Trim Drum, in this section).
b. Position the forward trim screw (29) on the left side of the mounting bracket below the pedestal.
c. Draw the cables (6) aft through the fuselage back to station 291.
d. If the trim cables (13) from the elevator are installed, connect the cable ends. (If the cables (13) from the elevator are not installed, pull the cables (6) tight and block them in the fuselage at bulkhead 274.) (Refer to Paragraph 5-30.)
e. With the cables installed and connected, install the cable guard pins at stations 125, 243.25 and 262; also close and secure the rub blocks at stations 137, 162.60, 174 and 215.
f. Remove the cable blocks.
g. Set cable tension with the turnbuckles (12) at station 291 and 308.75 per Table V-I and check rigging and adjustment per Paragraph 5-31.
h. Install and seal access plates and panels and install seats.

5-29. REMOVAL OF REAR ELEVATOR TRIM ASSEMBLY. (Refer to Figure 5-7.)

a. Remove the access plates located on each side of the fuselage and on the bottom side of the elevator, and also remove the tail cone assembly.

b. Block the forward trim cables at bulkhead station 274 by one of the methods shown in Figure 5-11, to prevent the cables from unwrapping. (If the forward trim assembly is also being removed, block the cables at the forward trim screw below the pedestal.)

c. Mark the cable ends within the fuselage at stations 291 and 308.75 to facilitate installation. Disconnect the cables at the turnbuckles (12).

d. Remove the cable guard pins from the pulleys located at stations 274 and 352 and the pulleys mounted on the elevator torque tube.

e. Disconnect the trim tab rod from the trim screw clevis by removing the attachment hardware and bushings.

f. The right and left trim screws and guide brackets are removed in the same manner. Remove the bolts that attach the trim screw and guide bracket to the elevator spar; remove the trim screw assembly and guide bracket and draw the trim cables from the fuselage and elevator through the access openings in the elevator.

5-30. INSTALLATION OF REAR ELEVATOR TRIM. (Refer to Figure 5-7.)

a. Check to be certain the trim cables are properly wrapped on the trim drums. If a new cable is installed, the cable must be wrapped with the drum removed from the bracket as follows:

1. Ascertain which drum is being wrapped and be sure the proper cable is used. (Refer to Table V-II for parts numbers and specifications.)

2. Position the cable in the drum and install the cable pin in the drum slot. Ascertain the proper length of cable end number 1 prior to wrapping per Table V-II.

3. Wrap the cable in opposite directions toward the center with 6-1/2 turns on end number 1, and 12 turns on end number 2. (Refer to Figure 5-7, Sketch E.)

4. Check the cable end positions on the drum after wrapping per specifications in Table V-II.

5. Reassemble the trim screw and block the trim drum to prevent the cables from unwrapping during installation.

b. The right and left trim screws are installed in the same manner. Position the trim screw and guide bracket on the elevator spar and secure with attachment hardware.

CAUTION

Do not tighten bolts until tab linkage hookup is complete; then tighten equally as required to remove drum end play, being careful not to overtighten causing bearing preload.

c. Draw the trim cables through the elevator, around the pulleys mounted on the elevator torque tube, and over the pulleys at station 352 into the fuselage. Route the longest cable from the right-hand trim screw around the pulley at station 274 and connect it to the shorter cable of the left-hand trim screw assembly.

NOTE

If the autopilot is installed check to determine that the trim cable is properly wrapped around the capstan of the elevator trim servo located on the aft side of bulkhead station 317.75. Route the inboard trim cable (side with turnbuckle) from the forward part of the airplane around the bottom groove of the idler pulley, to the capstan and around the top groove of the idler pulley to the aft section of the airplane, completing a figure eight. (Refer to Figure 5-36.)

d. Connect the remaining trim cable from the left rear trim screw to the forward trim cable from the left side of the control drum in the pedestal, and the right rear cable to the forward cable from the right side of the control drum in the pedestal. (Refer to Figure 5-7, Sketch E.)

e. If the forward trim cables are not installed, draw the rear cables tight and block the cables at bulkhead station 296. Install the forward trim assembly in accordance with Paragraph 5-28.

f. Install the cable guard pins in the pulleys at stations 274, 352, and in the pulleys mounted on the elevator torque tube.

g. Connect the rod end from the trim tab to the trim screw clevis by inserting the bolt and bushing assembly that rides in the guide bracket.

h. With the trim control completely installed, set the cable tension with turnbuckles (12) per specifications given in Table V-I. Check to be certain the trim screws move freely in both directions and check the rigging and adjustments per Paragraph 5-31.

i. Install the access plates and tail cone assembly.

5-31. RIGGING AND ADJUSTMENT OF ELEVATOR TRIM. (Refer to Figure 5-7.)

a. To adjust the elevator trim, the following steps should be accomplished during installation or as a adjustment check:

1. Remove the access panels on the left and right side of the fuselage aft of the pressure bulkhead at station 274, and also the access panels on the bottom of the elevators. Carefully remove the access panel located in the floor of the control pedestal.

2. Check to be certain the trim cables are wrapped according to the instructions given in Paragraphs 5-28 and 5-30.

3. Determine that the trim cable tension is set in accordance with the specifications given in Table V-I.

4. Ascertain that the actuating screws are positioned so that the anti-rotation bushings (35) are at midpoint of slots.

b. Rotate the trim control wheel in the cockpit to the full nose up position. Be sure that turnbuckle (12) terminal does not strike center pulley (42).

NOTE

If turnbuckle (12) terminal does strike center pulley (42) before actuating screws are at their stops, disconnect the trim tab rods (36) and rotate the screws in the drums until screws are at stops before terminal of turnbuckle (12) strikes center pulley (42). It may be necessary to back off the trim wheel to reinstall the trim tab rods (36) and anti-rotation bushings (35).

c. Adjust the trim tab rods (36) so that the tabs are in specified down position per Table V-I with the elevators neutral.

d. Check the rod ends for adequate thread engagement.

e. Rotate the trim control wheel in the cockpit to the full nose down position and check the tab position per Table V-I with the elevators neutral. Adjust the screw stops to obtain proper travel.

f. Coordinate the trim wheel indicator with the tab position. (Refer to Paragraph 5-50.)

5-32. DETERMINING THE FRICTION IN THE ELEVATOR CONTROL SYSTEM. The complete elevator control system (including autopilot if installed) shall be rigged to its proper travels and cable tensions prior to determining friction in the system.

"TOTAL FRICTION" in the PA-31T elevator control system shall not be in the excess of 10 pounds on earlier models and 11 pounds on models with serial numbers 31T-7920053, 31T-8020001 and up, with the arm on SAS actuator full down and elevator in neutral position. On the PA-31T1 only, adjust the turnbuckle to obtain 43 ± 1 pounds tension and on the PA-31T2 only, 48 ± 1 pounds tension on the elevator control spring, with elevator in neutral position. "TOTAL FRICTION" in the PA-31T1 and PA-31T2 elevator control system shall not exceed 11 pounds. Determine the actual friction in the system by using the following procedure:

a. Attach a spring scale to the inboard trailing edge of the elevator, outboard of the tab.

b. With spring scale attached, position the elevator trailing edge down approximately 2.00 inches from the neutral position.

c. Record the force (see Step g.) required to raise the elevator thru the neutral position until the trailing edge is approximately 2.00 inches above neutral.

d. Record the restraining force lowering the elevator from the 2.00 inches up position thru the neutral position to the original 2.00 inches down.

e. Repeat the above raising and lowering processes until average forces are obtained.

f. The total friction is obtained by subtracting the two forces.

NOTE

Do not exceed 60 pounds force for any measurement.

g. The elevator shall be rotated with a steady movement and the force reading taken when the elevator is passing thru the neutral position. Do not stop rotation when taking reading.

5-33. RUDDER CONTROLS.

5-34. REMOVAL OF RUDDER CONTROL CABLES. (Refer to Figure 5-12.)

a. Remove the left pilot's seat and left row of passenger seats.

b. Carefully remove the left row of floor panels and outside access panels to the aft section of the fuselage.

c. Remove the tail cone and the access plate under the rudder on the top aft section of the fuselage.

d. Loosen the rudder and aileron interconnecting cables at turnbuckles (10) at station 288, in the aft section of the fuselage, enough to allow the large connecting spring (12) at station 295 to be disconnected from the rudder cable.

e. Mark one set of cable ends to facilitate installation and disconnect the cables (7 and 8) at turnbuckles (4).

f. Mark and disconnect the cables (7 and 8) from the rudder sector (17).

g. Remove the cable guard pins at fuselage stations 213, 242.50, 275, 315 and 345. Also when removing the left cable (7), remove the guard pins at stations 142 and 160.60.

h. Draw the cables aft through the fuselage and remove them from the airplane.

5-35. INSTALLATION OF RUDDER CONTROL CABLES. (Refer to Figure 5-12.)

NOTE

Fuselage station reference points are provided in order to facilitate the location of various components in the PA-31T, PA-31T1 and PA-31T2. Subtract 24 inches for all station points forward of fuselage station 135 for the PA-31T2, to find the proper location of various components in this aircraft.

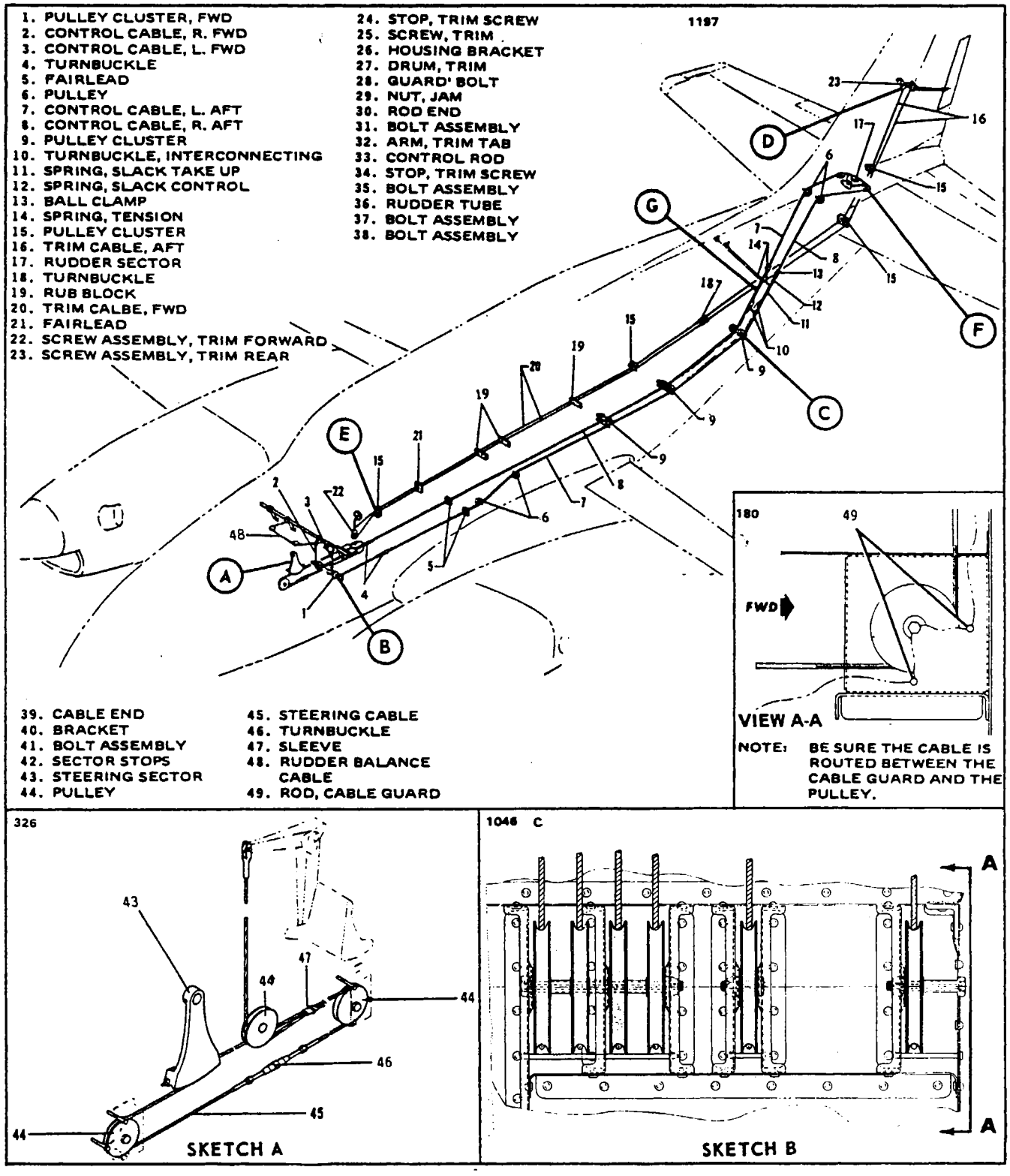

Figure 5-12. Rudder and Rudder Trim Controls

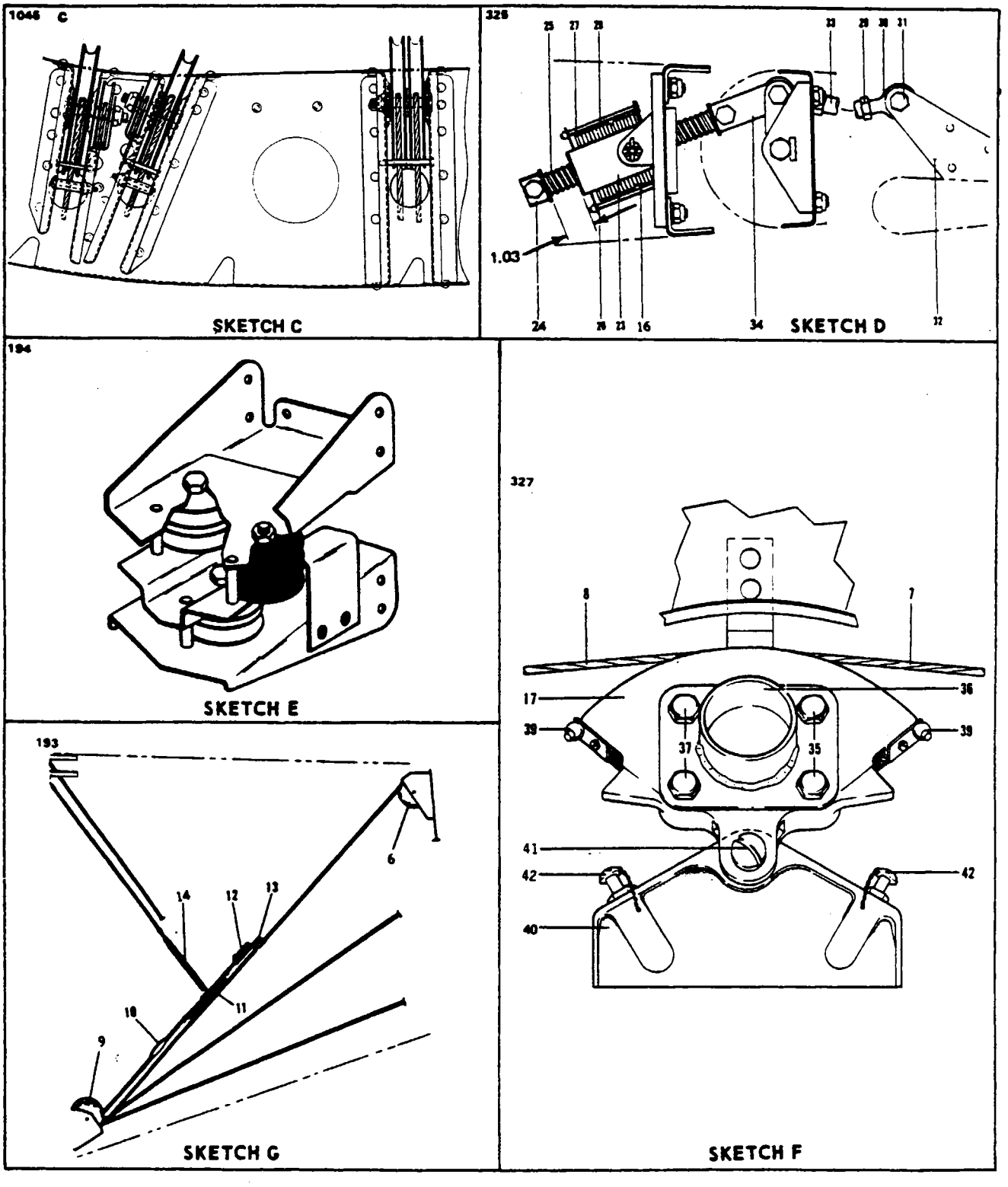

Figure 5-12. Rudder and Rudder Trim Controls

a. The control cables (2 and 3) that connect between the rudder pedals and the aft control cables (7 and 8) may be installed by the following procedure:

1. The left and right cables (2 and 3) are drawn forward from fuselage station 100, around the forward pulley cluster at station 83.34, upward and attached to the left and right rudder pedals.

b. The control cables (7 and 8) that route aft beginning at fuselage station 100 to the rudder sector may be installed by the following procedure:

1. Connect the cables (7 and 8) to the rudder sector (17).
2. Draw the cable forward through the fuselage as shown in Figure 5-12.
3. Connect the cables (7 and 8) to the forward cables (2 and 3) at station 100.
4. Install the cable guard pins at stations 345, 315, 275, 242.50, 213, 160.60 and 142, also at the forward pulley cluster.
5. Adjust the cable tension at station 100 in accordance with cable tensions given in Table V-I.

c. The steering cable (45) for the nose gear steering system may be installed by the following procedure:

1. Connect the cable (45) to the forward end of the steering sector (43) and route the cable aft through bulkhead 81 to the pulley at station 104, going over this pulley and connecting the turnbuckles at station 90, and the cable through bulkhead 81 to the pulley at station 68 and over this pulley back to the rear end of the steering sector (43). Connect this cable to the right rudder cable at station 95.25.
2. Install the cable guard pins on both pulleys and adjust the cable tensions at station 96 in accordance with cable tensions given in Table V-I and rigging and adjustment per Paragraph 5-36.

d. Install the access plates and panels and install seats.

5-36. RIGGING AND ADJUSTMENT OF RUDDER CONTROLS. (Refer to Figure 5-12.)

a. Remove the left pilot's seat, the floor panel to the left of the control pedestal, the left rear exterior access panel just aft of the entrance door and the tail cone.

b. Adjustment of the rudder and rudder pedal for neutral may be accomplished as follows:

1. Clamp the rudder pedals to align them in a lateral position as shown in Figure 5-16.
2. Adjust the turnbuckles (4) to obtain the proper cable tension per Table V-I and to align the rudder at neutral position. Neutral position of the rudder may be established by aligning vertically the forward overhang at the upper portion of the rudder with the vertical fin or with the use of a fabricated rudder rigging jig. (Specifications for the fabrication of this jig are given in Figure 5-34.)

c. Rudder travel adjustment with the use of the fabricated rigging tool (refer to Figure 5-13) may be accomplished as follows:

1. Level the airplane longitudinally and laterally. (Longitudinal leveling is not mandatory if a propeller protractor is used for this adjustment.)
2. Allow the elevator to remain in its down position.
3. Position the jig on the elevator torque tube and align with the centerline of the airplane.
4. Set a bubble protractor to 29° 28′ and position it on the centerline of the jig plate. (This angle assures rudder travel measurement perpendicular to the rudder hinge centerline.)
5. With protractor still set to 29° 28′, center the bubble by adjusting the screws at the aft end of the jig plate. (Keep jig legs tight to elevator torque tube.)
6. Position the pointer along the trailing edge of the rudder with the point approximately .125 inch from plate.
7. Set rudder with stops to the degree of travel as given in Table V-I and lock stops.

NOTE

If provisions are provided for safety wiring the nut and screw on the rudder hinge assembly, safety wire with MS20995-C32 as shown in Figure 5-10.

d. To adjust the interconnecting cables between the aileron and rudder cables, first ascertain that cable tension has been set for both the aileron and rudder cables. Ascertain that the aileron and rudder controls and surfaces are neutral and adjust the interconnecting cable turnbuckles (10) at station 288, so that the spring (12) will extend .060 of an inch.

NOTE

Adjustment of the nose gear steering can be found in Section VII.

e. Safety turnbuckles and install and seal access plates, panels and seats.

5-37. RUDDER TRIM CONTROLS.

5-38. REMOVAL OF FORWARD RUDDER TRIM ASSEMBLY. (Refer to Figure 5-12.)

NOTE

Fuselage station reference points are provided in order to facilitate the location of various components in the PA-31T, PA-31T1 and PA-31T2. Subtract 24 inches for all station points forward of fuselage station 135 for the PA-31T2, to find the proper location of various components in this aircraft.

a. Remove the right pilot's seat and right row of passenger seats.

b. Carefully remove the right row of floor panels and the access panel to the right aft section of the fuselage.

c. Block the forward trim cables (20) at the trim screw assembly below the control pedestal and also the rear cables (16) at bulkhead 296, to prevent the cables from unwrapping from their drums, by one of the methods shown in Figure 5-11.

d. If the aft screw assembly is also to be removed, then remove the access plate attached to the right side of the vertical fin and block the cables (16) at the screw assembly instead of in the fuselage. (Refer to Paragraph 5-40.)

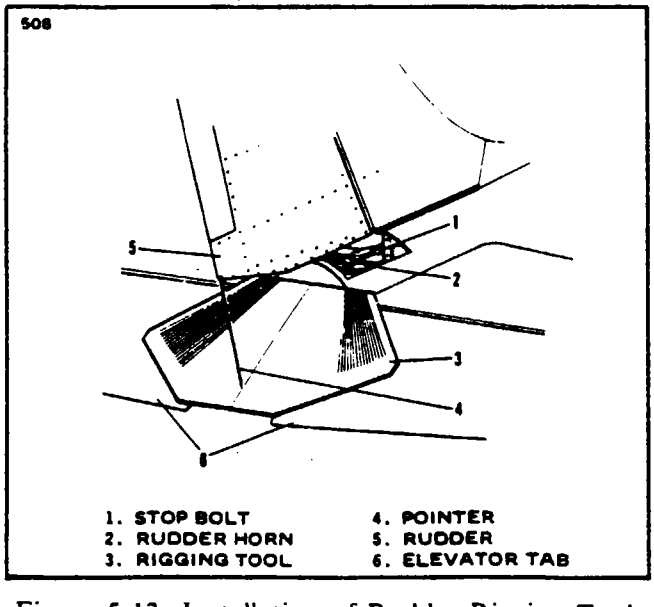

Figure 5-13. Installation of Rudder Rigging Tool

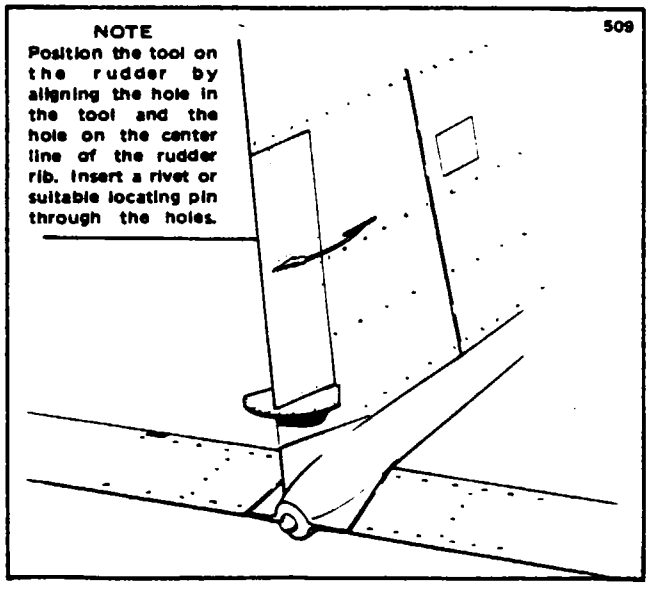

Figure 5-14. Installation of Rudder Trim Rigging Tool

e. Mark one set of cable ends at station 287.50 to facilitate installation and disconnect the cables (16 and 20) at the turnbuckles (18).

f. Remove the cable guard pins at station 125 and 243.25.

g. Remove one screw from each set of rub blocks (19) at stations 137, 162.60, 174 and 215, and open them far enough to allow the cable ends to pass through.

h. Slide the bushing up the shaft to separate the two halves of the trim screw assembly.

i. Remove the bolts that attach the screw assembly to the mounting bracket and draw the assembly with the cables from the fuselage.

5-39. INSTALLATION OF FORWARD RUDDER TRIM ASSEMBLY. (Refer to Figure 5-12.)

NOTE

Fuselage station reference points are provided in order to facilitate the location of various components in the PA-31T, PA-31T1 and PA-31T2. Subtract 24 inches for all station points forward of fuselage station 135 for the PA-31T2, to find the proper location of various components in this aircraft.

a. Ascertain that the cable is evenly wrapped (centered) on the trim drum and block to prevent unwrapping. (Refer to Wrapping the Trim Drum, in this section.)

b. Install the trim screw (22) on the right side of the mounting bracket and secure with attachment bolts.

c. Draw the cables (20) through the fuselage to the aft section of the fuselage at station 287.50.

d. If the trim cables (16) from the rudder are not installed, pull the cables (20) tight and block them in the fuselage at bulkhead 274.

e. With the cables installed and connected, install the cable guard pins at stations 125 and 243.25, also close and secure the rub blocks (19) at stations 137, 162.60, 174 and 215.

f. Remove the cable blocks.

g. Set the cable tension with the turnbuckles (18) at station 287.50 per Table V-I and check rigging and adjustment per instructions given in this section.

h. Install and seal access plates and panels and install seats.

5-40. REMOVAL OF REAR RUDDER TRIM ASSEMBLY. (Refer to Figure 5-12.)

a. Remove the access panel on the aft right section of the fuselage and also on the right side of the vertical fin and below the horizontal stabilizer.

b. Block the trim cables (16) to prevent them from unwrapping at the screw assembly within the vertical fin and within the fuselage of bulkhead station 274 by one of the methods shown in Figure 5-11.

c. If the forward trim assembly is also being removed, block the cable (20) at the trim screw assembly below the control pedestal. (Refer to Paragraph 5-38.)

d. Mark one set of cable ends within the fuselage at station 287.50 to facilitate installation and disconnect the cables (16 and 20) at the turnbuckles (18).

e. Remove the cable guard pins at fuselage stations 331.50 and 340.

f. Disconnect the trim control rod (33) from the trim screw (25).

g. Remove the bolts that secure the screw assembly to the spar.

h. Remove the screw assembly and trim cables through the access hole in the fin.

5-41. INSTALLATION OF REAR RUDDER TRIM ASSEMBLY. (Refer to Figure 5-12.)

a. Ascertain that the trim cable is evenly wrapped (centered) on the drum and block the cables to prevent them from unwrapping.

b. Position the screw assembly (23) in the vertical fin; install and secure the attachment bolts.

c Draw the cables (16) through the fin into the fuselage and connect them at the turnbuckles (18) at station 287.50 (If the cables (20) are not installed, draw the cables (16) tight and block them at the bulkhead at station 317.75. Install the forward trim assembly per Paragraph 5-39.)

d. Remove the cable blocks from the rear trim screw assembly (23) and from the forward trim cables (20).

e. Connect the control rod (33) to the trim screw (25) until the trim cable, drum, and screw are rigged and adjusted.

f. Install the cable guard pins at fuselage stations 331.50 and 340.

g. With the complete trim control system installed, set cable tension with the turnbuckles (18) at station 287.50 per Table V-I and check rigging and adjustment per instructions given in this section.

h. Install and seal access plates and panels.

5-42. RIGGING AND ADJUSTMENT OF RUDDER TRIM. (Refer to Figure 5-12.)

a. To adjust the rudder trim, it must be ascertained that the following has been accomplished either during installation or as a preadjustment check:

1. Trim cables are evenly wrapped (centered) on their drums and both cable turnbuckles are located approximately at fuselage station 287.50.

2. The cable tension is set in accordance with Table V-I.

b Remove the access plate on the right side of the vertical fin.

c. With the trim screw (25) disconnected from the control rod (33) and allowed to rotate, turn the trim drum until 11.50 turns of cable are on the forward end of the drum and 7.00 turns of cable on the aft end of the drum.

d. Now rotate the screw (25) so 1.03 of an inch exists between the forward screw stop (24) and the drum housing (26), as measured along the screw. (Neutral position of the screw is at this measurement.) Connect the control rod to the screw.

e. With trim screw in neutral position, the trailing edges of the tab and rudder should align. If they do not, remove the attachment bolt (31) and loosen the jam nut (29) on the rod end (30) at the aft end of the tab control rod. Turn the rod end until the trailing edges align. Install and secure the attachment bolt (31) and rod end jam nut (29).

f. Turn the trim in each direction until screw stops to check tab angles from the center line of the rudder as given in Table V-I. A rudder trim tab rigging tool may be fabricated to check the table angles. (Refer to Figure 5-35.) Install the tool as illustrated in Figure 5-14. Also check the minimum number of wraps left on trim drum. (Minimum allowable is one and one-quarter turns.)

g. Check adjustment of trim indicator per instructions given in this section.

5-43. REMOVAL OF RUDDER SECTOR. (Refer to Figure 5-12.)

a. Remove the left pilot's seat and floor panel to the left of the control pedestal.

b. Remove the access plate, under the rudder, on top of the aft section of the fuselage.

c. Relieve cable tension from the rudder control cables by loosening one of the turnbuckles (4).

d. Mark one end of the rudder sector (17) and cable end (39) to facilitate installation.

e. Disconnect the cables from the rudder sector ends.

f. Unbolt the rudder sector (17) from the rudder torque tube (36) and the hinge bracket (40). Remove the sector.

5-44. INSTALLATION OF RUDDER SECTOR. (Refer to Figure 5-12.)

a. Position the rudder sector (17) under the rudder torque tube (36) and hinge (40) and secure with bolts and torque.

b. Connect the rudder cables (7 and 8) to the rudder sector (17) and secure. Allow the cable ends (39) to rotate freely.

c. Set cable tension per Table V-I and check control cable rigging and adjustment per instructions given in this section.

d. Install and seal access plates and panels, also install left pilot's seat.

5-45. RUDDER PEDAL ASSEMBLY.

5-46. REMOVAL OF PEDAL ASSEMBLY. (Refer to Figure 5-15.)

a. Remove the left pilot's seat and the floor panel to the left of the control pedestal.

b. Relieve the tension from the rudder control cables by loosening one of the cable turnbuckles (4).

c. Disconnect the rudder control cables (25) from the pedal assembly.

d. Disconnect the brake master cylinder (26) from the pedal assembly.

e. Disconnect the balance cable (33) from the two inboard pedals (28 and 31), by removing the flat head pins at rudder pedals (28 and 31).

f. Remove the rudder torque tube guards (35), by removing the machine screws,nuts, and clamps (37) positioning the guards to the torque tube and remove the attaching hardware (36) securing each guard to the brake line support channel (34).

g. Remove the small round access plate (23) located on the right side of the fuselage.

h. Remove the bolts securing the retainer collars (5 and 18) and left pedals (31 and 32) on the torque tube (6).

i. Slide the torque tube out through the right side of the fuselage. (Note the number of spacer washers between each set of retainers (5 and 18) and bearings (3 and 21.)

j. The left pedals (31 and 32) are free to be removed.

k. To remove the outer torque tube (14) assembly with right pedals (27 and 28), unbolt and separate the tube's bearing blocks (12) located on top of the wheel housing. (Note the number of spacer washers (13) between the bearing blocks.)

l. Remove the outer tube assembly (14) and disassemble.

m. The torque tube bearings may be removed by removing the cap bolts that secure the bearings to their mounting brackets.

n. To remove the balance cable (33), remove the clevis pins at both ends and remove the pulley guard pins at both pulleys.

5-47. INSTALLATION OF PEDAL ASSEMBLY. (Refer to Figure 5-15.)

a. If the balance cable (33) is removed, install before proceeding with the rest of the installation. Replace pulley guard pins.

b. Install and secure the torque tube bearings (3 and 21) to their mounting brackets (2 and 22) with cap bolts (20).

c. Assemble the outer torque tube (14) assembly, including both right pedals (27 and 28).

d. Position the outer torque tube (14) assembly over the wheel housing and install bearing blocks (12). Spacers (13) are installed between the blocks, so that when the blocks are bolted together, the tube will be free to rotate with minimum up and down play. (Spacers are available in thickness of .012 ± .02; P/N 81102-35, .018 ± .02, P/N 81102-36 and .032, P/N 81102-37.)

e. Lubricate and slide the torque tube (6) through side of the fuselage and right bearing (21) far enough to slide the right retainer collar (18) on the tube.

f. Slide the tube (6) through the outer torque tube (14) assembly, installing the left pedals (31 and 32) and left retainer collar (5).

g. Insert the bolts (4 and 19) through bolt retainer collars (5 and 18) and tube (6) (do not install nut) and determine number of spacer washers required to allow minimum slide play. The tube may be slid to either side when the collar bolts are removed to allow the spacer washers to be divided and installed evenly between each set of retainers (5 and 18) and bearings (3 and 21).

h. With the spacer washers installed, install the bolts through the retainers (5 and 18) and both left rudder pedals (31 and 32). Install nuts with washers and secure.

i. Wipe off excess lubricant from torque tube.

j. Install the rudder torque tube guards (35) by positioning each guard in front of the torque tube and securing it in place with two machine screws and nuts (36) at the brake line support channel (34). Install the clamps around the torque tube and fasten to the guards with machine screws and nuts (37).

NOTE

The clamps around the torque tube must not be deformed or permitted to interfere with the rotation of the torque tube.

k. Connect the balance cable (33) to the rudder pedals. Pedal alignment may be checked by referring to Paragraph 5-48.

l. Connect rudder cables (25) to the pedal assembly and set cable tension per Table V-I and check rigging and adjustment per instructions given in this section.

m. Install and seal access plates, panels and seats.

1. NUT, ANCHOR
2. BRACKET, MOUNTING
3. BLOCK, BEARING
4. BOLT ASSEMBLY
5. RETAINER
6. TORQUE TUBE
7. BOLT ASSEMBLY
8. ROLL PIN-BOLT
9. CABLE END
10. BOLT ASSEMBLY
11. BOLT ASSEMBLY
12. BLOCK, BEARING
13. SPACER
14. TORQUE TUBE, OUTER
15. BOLT ASSEMBLY
16. ROLL PIN-BOLT
17. BOLT ASSEMBLY
18. RETAINER
19. BOLT ASSEMBLY
20. BOLT, CAP
21. BLOCK, BEARING
22. BRACKET, MOUNTING
23. PLATE
24. ROD
25. CONTROL CABLE
26. BRAKE CYLINDER
27. REDAL, RIGHT OUTER
28. PEDAL, RIGHT INNER
29. NUT, JAM
30. BOLT ASSEMBLY
31. PEDAL, LEFT INNER
32. PEDAL, LEFT OUTER
33. BALANCE CABLE
34. BRAKE LINE SUPPORT CHANNEL
35. TORQUE TUBE GUARD
36. MACHINE SCREWS AND NUTS
37. SCREWS, NUTS AND CLAMPS
38. PULLEY
39. FLAT HEAD PINS

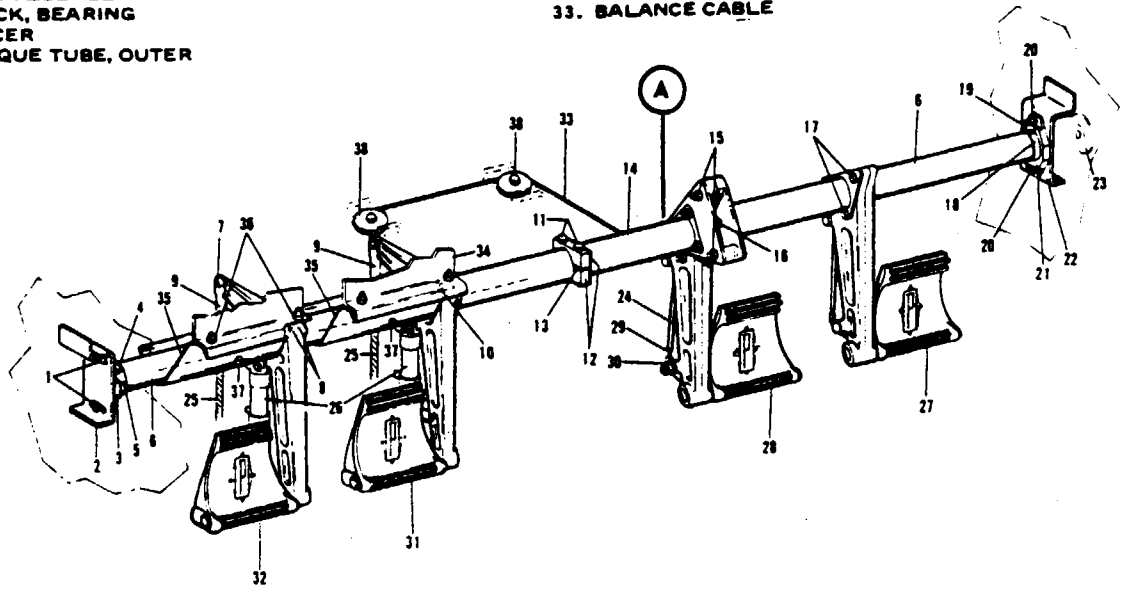

1198

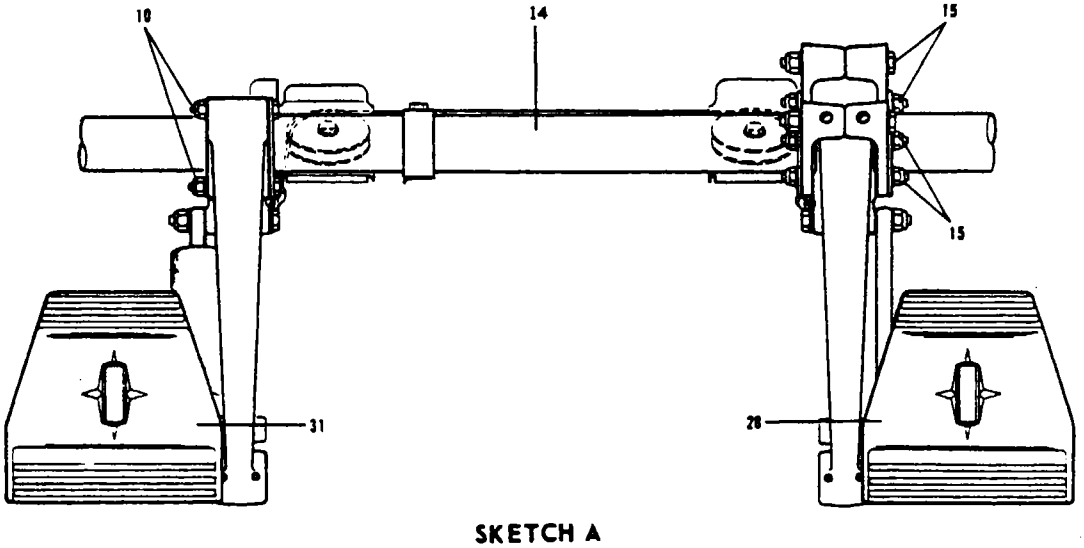

1199

SKETCH A

Figure 5-15. Rudder Pedal Installation

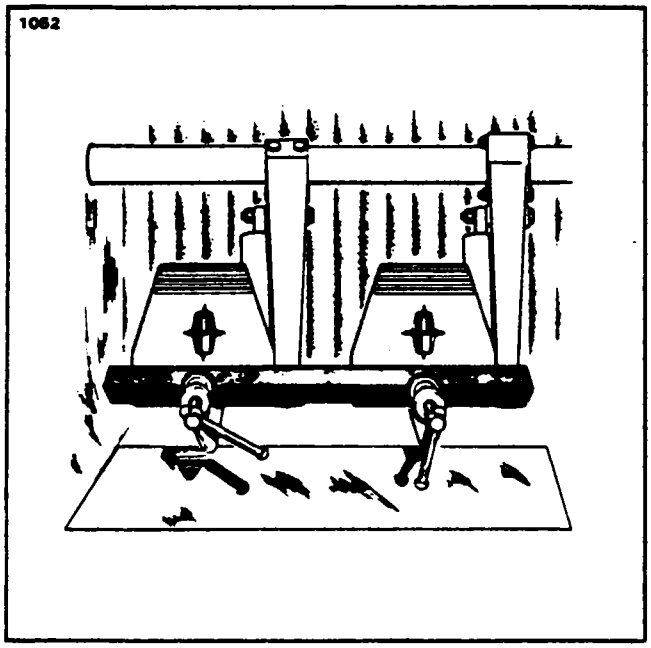

Figure 5-16. Clamping Rudder Pedals

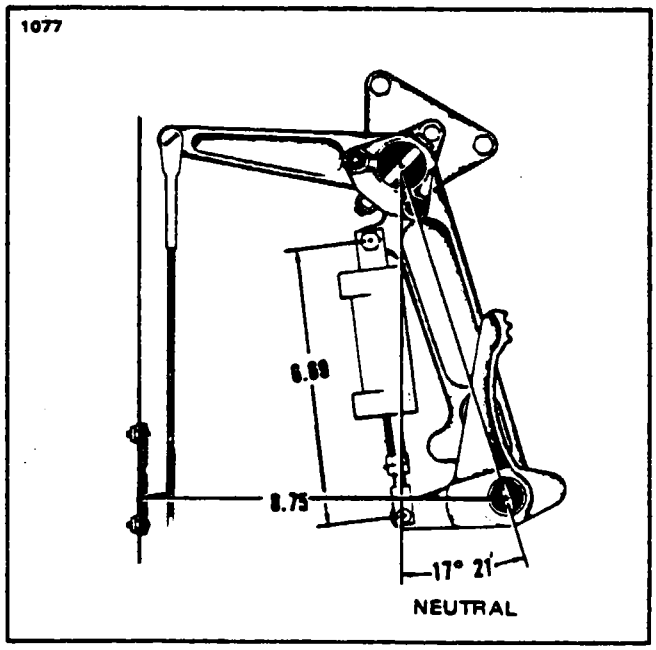

Figure 5-17. Rigging Rudder Pedals

5-48. RIGGING AND ADJUSTMENT OF RUDDER PEDALS. (Refer to Figure 5-16 and 5-17.)

a. Clamp the rudder pedals on the left or right side to align in a lateral position.

b. Adjust the brake master cylinder (26) and rods (24) to obtain 6.69 inches measured from the upper fitting to the lower fitting on the pedal assembly as shown in Figure 5-17.

c. The neutral angle of the rudder pedals is 17° 21' aft of the vertical position, with the airplane level, as shown in Figure 5-17.

5-49. TRIM INDICATORS.

5-50. ADJUSTMENT OF TRIM INDICATORS.

a. Check the indicator mechanism for freedom of movement and proper lubrication in accordance with the lubrication chart in Section II.

b. Maintain the trim tabs at the control surfaces in a neutral position.

c. Ascertain that the trim drums are at their neutral positions.

d. If the trim indicators are not aligned with the neutral marker on the pedestal, proceed with the following steps:

1. Remove the trim control wheel from the shaft.
2. Loosen the three screws which hold the indicator discs to the indicator mechanism.
3. Rotate the discs to the right or left to align the neutral position of the discs with the marker on the pedestal.
4. Tighten the three screws and replace the trim control wheel.

5-51. FORWARD TRIM MECHANISM. (Refer to Figure 5-18.) All three forward screw assemblies are mounted on the same bracket located below the floor level of the control pedestal and should be removed and installed in accordance with the following procedures.

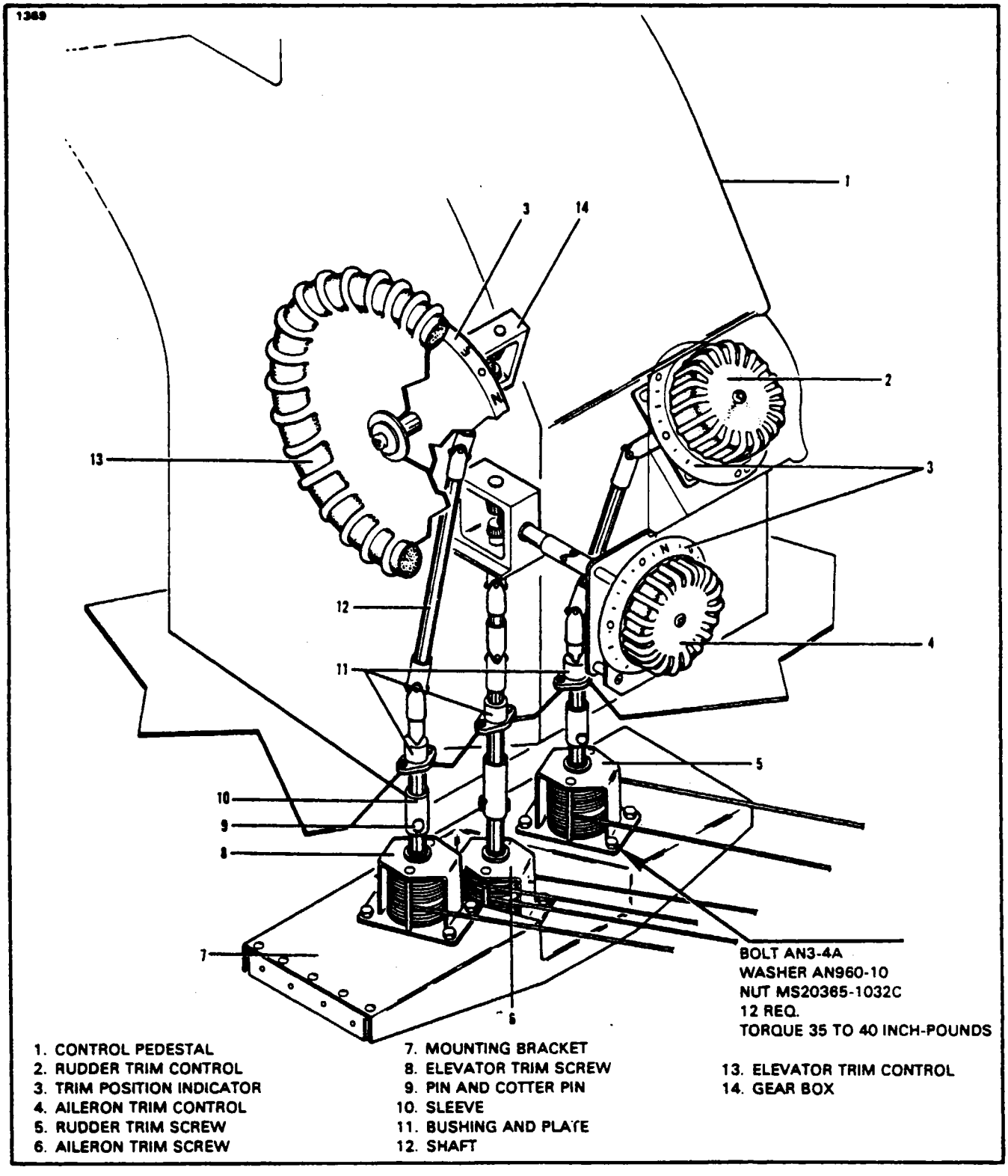

Figure 5-18. Trim Controls Installation

5-52. REMOVAL OF FORWARD TRIM MECHANISM.

a. Carefully remove the access panel located on the floor in front of the control pedestal and at the turnbuckles for the particular trim system being serviced.

b. Block the particular trim cables at the screw mechanism and aft of the turnbuckles for that system.

c. Disconnect the turnbuckles and remove the cotter pin and clevis pin (9) from the sleeve (10) of the trim mechanism being serviced.

d. Remove the four bolts which secure the screw assembly to the mounting bracket (7).

e. Slide the sleeve (10) up on the shaft and disengage the male and female shaft ends and remove the screw assembly from the mounting bracket.

f. It is now possible to remove the complete trim screw assembly and forward trim cables from the airplane for any further service.

5-53. INSTALLATION OF FORWARD TRIM MECHANISM.

a. Install the trim screw assembly and forward trim cables into the airplane, through the access panel opening in front of the control pedestal.

b. Connect the forward trim cables to the aft trim cables and secure the turnbuckles.

c. Position the trim screw assembly on the mounting bracket and align the male and female shaft ends together.

d. Slide the sleeve over the shaft connection and install the four bolts to secure the trim mechanism to the mounting bracket. Torque bolts 35 to 40 inch-pounds.

e. Install the clevis pin through the sleeve and shaft and secure it in place with a new cotter pin.

f. Remove the blocks from the trim cables and rig the particular trim system in accordance with the instructions given in this section of the service manual for the system being serviced.

g. Replace the access panels and any other items removed to accomplish the servicing of the mechanism.

5-54. TRIM DRUM.

5-55. WRAPPING THE TRIM DRUM. (Refer to Figure 5-19.) All trim drums except the elevator trim are wrapped basically by the same procedure and must be removed from the airplane.

NOTE

Refer to Paragraph 5-30 for wrapping elevator trim drums.

a. Mark the end of the drum (2) toward the base (11) of the housing bracket (3) for a reference when later installing and wrapping the cable on the drum.

b. With the drum housing bracket (3) firmly held, remove one of the cable guard bolts (8) from the housing bracket.

c. Remove the drum screw (4) or the drum shaft (9) from the trim screw assembly. The screw (4) is removed by removing the stop (5) located on the end of the screw, opposite the base (11) of the housing bracket. Turn the screw from the drum (2). The shaft (9) is removed by driving the roll pin (10) from the center of the drum (2). Press the shaft from the drum.

d. Remove the drum from the housing.

e. Unwrap the trim cable (1) and remove the cable and lockpin (13) from the drum. (If one end of the cable has been marked to facilitate hookup of the cable ends, note this location in relation to the drum when installing a new cable on the drum.)

f. Check the condition of the bushing (7) in the housing bracket for excess wear.

g. To install and wrap the trim cable, locate the center of the cable, measuring from end to end.

h. Insert the center of the cable into the cable slot in the drum and install the lockpin (13).

i. Hold the drum (2) with the previously marked or base end of the drum down.

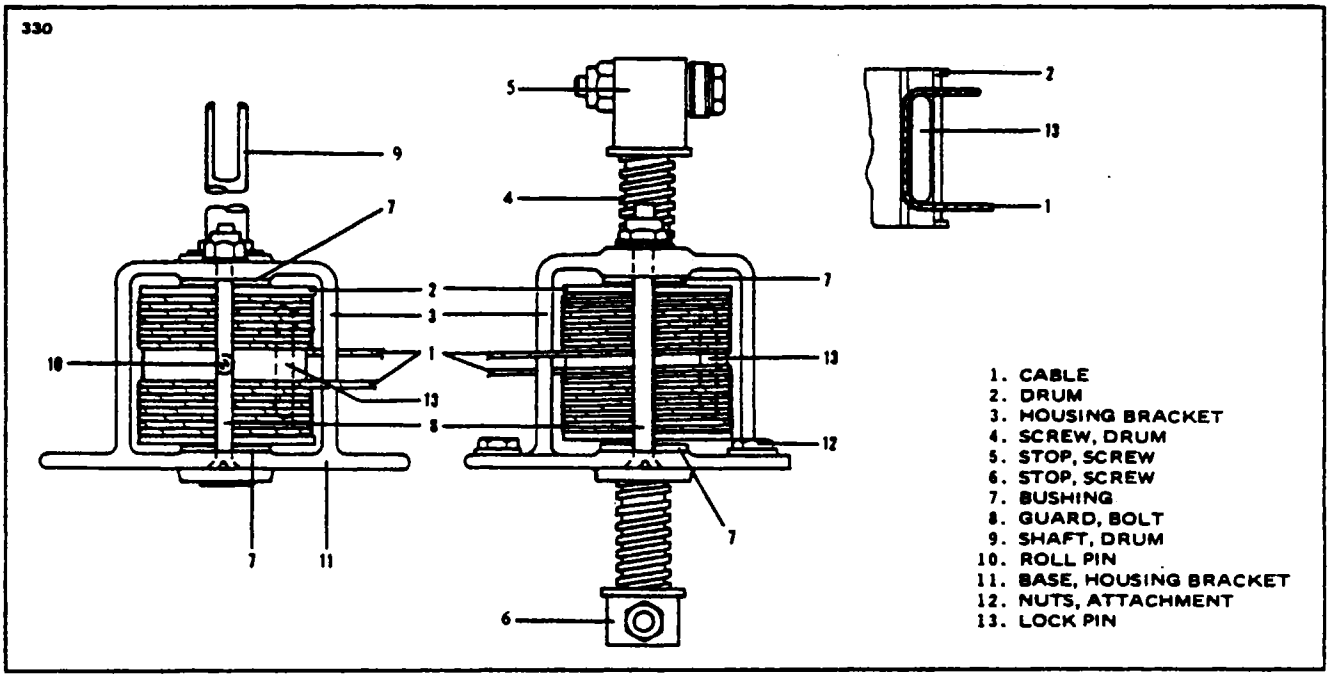

Figure 5-19. Trim Screw Assembly

j. Looking down on the drum, wrap the cable that leads from the base end up nine and one-quarter turns in a counterclockwise direction. The cable from the upper end, wrap down in a clockwise direction, nine and one-quarter turns.

k. Insert the drum in the housing bracket, position the drum and route the cables from the assembly as shown in Figure 5-19.

l. Install the screw (4) and screw stop (5) on the drum shaft (9) and secure with the roll pin (10).

m. Block the trim cables in center position to keep them tight and from unwrapping, by the method shown in Figure 5-11.

n. Center the drum between the stops on the screw by rotating the screw.

5-56. WING FLAP CONTROLS. (Piper System)

5-57. REMOVAL OF FLAP ACTUATOR MOTOR. (Refer to Figure 5-20.)

a. Remove the center floor panel located in the main cabin area. The flap actuator motor (5) is located on the forward side of the fuselage bulkhead at station 174.

b. Disconnect the electrical leads from the motor.

c. Cut safety wire (12) and disconnect the flexible drive shaft ends (4 and 6) from the motor.

d. Remove the clamp (9) that holds the motor on its mounting bracket (13). Remove the motor.

e. If desired to replace the shock grommets in the bulkhead, the motor with its mounting bracket may be removed together by removing the bracket mounting bolts at the bulkhead.

5-58. INSTALLATION OF FLAP ACTUATOR MOTOR. (Refer to Figure 5-20.)

a. Install the shock grommets in the bulkhead at station 174.
b. Install the flap actuator motor (5) and bracket (13) on the forward side of the bulkhead. Ascertain that the anti-rotation pin on the motor fits in the pinhole in the mounting bracket. Secure the holding clamp (9).
c. Connect the flexible drive shaft ends (4 and 6) to the motor (per Paragraph 5-60) and secure nut (10) with .040 safety wire (12).
d. Connect the electrical leads.
e. Check flap rigging and adjustment per instruction given in this section.
f. Install access plates and panels.

5-59. REMOVAL OF FLEXIBLE ACTUATOR SHAFT. (Refer to Figure 5-20.)

a. Remove the center floor panel located in the main cabin area.
b. Remove the right and/or left row of seats and floor panels aft of the main spar.
c. Remove the aft access plate on the fairing located on the underside between the fuselage and wing.
d. Remove the access plates at the aft side of the wheel well at stations 34.50, 44.50 and 54, and on the underside of the wing at stations 65, 82.75 and 92.50.
e. Cut the safety wire (12) and disconnect the shaft (4 and 6) from the actuator motor (5) and flap transmission (3 and 7).
f. Remove the support clamp on the fuselage bulkhead and the support grommets within the wing and fuselage.
g. Remove the actuator shaft.

5-59a. INSPECTION OF FLEXIBLE ACTUATOR SHAFT. (See paragraph 3-9, Section III.)

5-60. INSTALLATION OF FLEXIBLE FLAP ACTUATOR SHAFT. (Refer to Figure 5-20.)

a. Draw the shaft 4 or 6 through the wing into the fuselage.
b. Align and insert the tang on shaft assembly into slot in transmission. Tighten nut finger tight and wrench not over 1/16 turn from finger tight. When properly installed, the nut on flexible shaft will bottom or be within 3/16 of an inch of bottoming against transmission, thus insuring that the end of shaft housing is firmly seated against transmission. Safety nut with .040 wire.
c. After the transmission end of shaft has been connected, observe the clearance between the outer sheath and inner cable. Twist outer sheath in proper direction; bring clearance to 3/64 ± 1/32 of an inch. It may be necessary to loosen clamp on fuselage bulkhead in order to twist outer sheath if cable has not been removed from aircraft. Holding outer sheath in this position, insert spline into flap motor and tighten nut. Safety nut with .040 wire. The clearance check noted above must be conducted on every occasion that the flexible shaft is disconnected from the motor or transmission.
d. Check the flap rigging and adjustments per instructions given in this section.
e. Install the access plates, panels, clamps, grommets and seats.

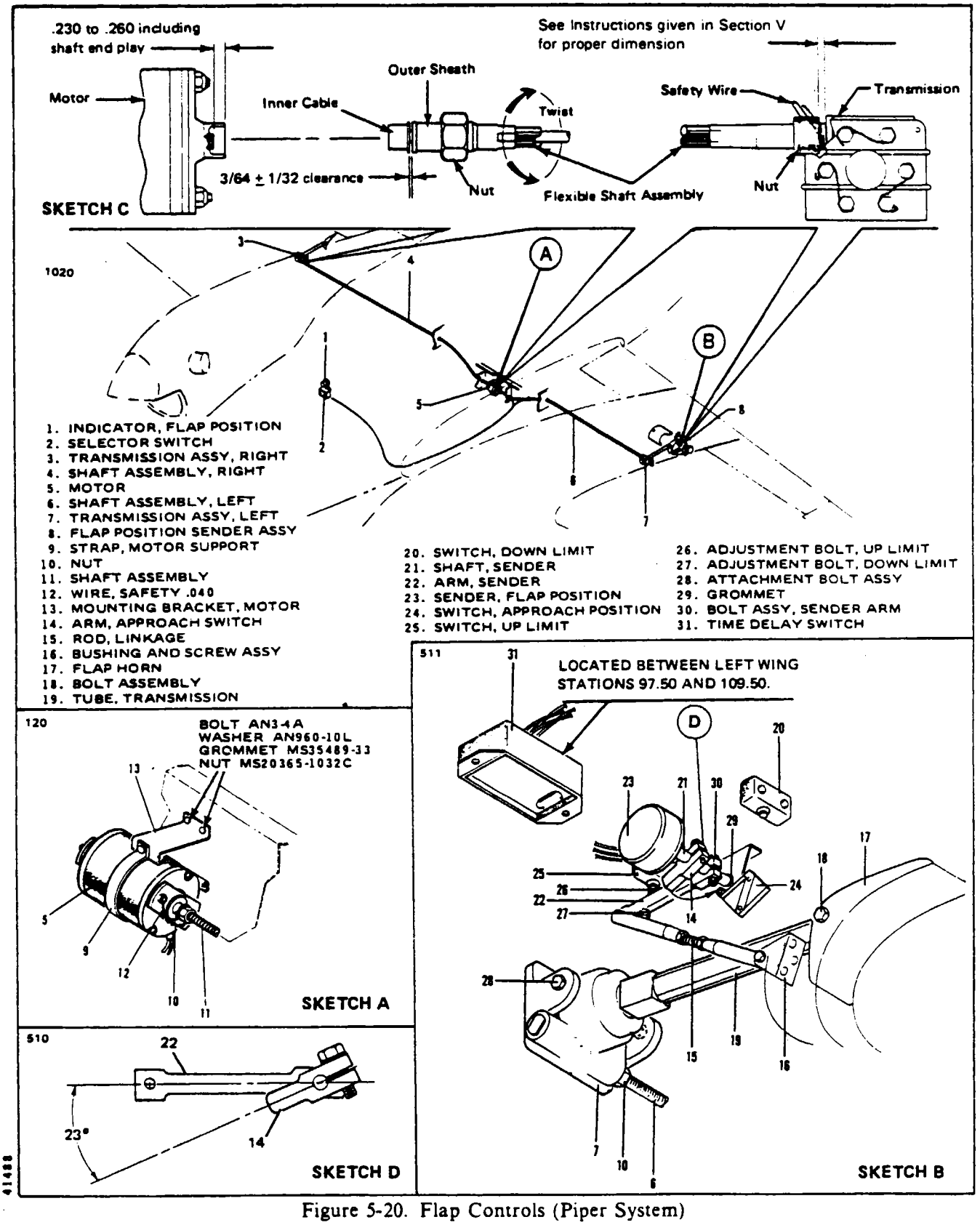

Figure 5-20. Flap Controls (Piper System)

5-61. REMOVAL OF FLAP TRANSMISSION ASSEMBLY. (Refer to Figure 5-20.)

a. Lower the flap and remove the access plate on the aft underside of the wing and at the false spar area, both of which are at station 92.50.
b. Disconnect the transmission tube (19) from the flap horn bracket (17).
c. Remove the safety wire (12) and disconnect the flexible actuator shaft (4 and 6).
d. Remove the spreader bushing and washers (14) from between the transmission attachment brackets.
e. Remove the transmission from its mounting brackets and draw the unit through the access opening in the wing false spar.

5-62. CLEANING, INSPECTION AND REPAIR OF FLAP TRANSMISSION. (See paragraphs 3-8, 3-9, 3-10, and 3-11, Section III, for Wing Flap Transmission and Actuator Cable Inspection and Repair.)

a. Clean the transmission assembly with a suitable solvent.
b. Inspect the transmission tube for excessive end or side play on the transmission screws.
c. Check that the transmission tube, screw, and rod end are not distorted or bent.
d. Check that the screw bearing is not loose on the transmission screw or within the transmission housing. Excess wear can be determined by holding the transmission and moving the screw up and down.
e. Check for excess wear within the transmission by turning the screw by hand and noting the end and side play in the transmission drive shaft. End play should not be great enough to cause end pressure on the motor drive shaft.
f. Should any of these checks show excess wear, corrosion or damage, the transmission or its components should be replaced.
g. Check the solenoid brake assembly for any excess wear, broken parts, sticking or burned out solenoid, and repair or replace the assembly.
h. After the transmission screw and tube have been cleaned and dried, a coating of Aircraft Actuator Grease, Specification MIL-G-23827, should be applied to the screw, ball nut and transmission.
i. When the transmission assembly is disassembled for any reason, or at 500 hours, it should be repacked 75 percent full with Dukes P/N 2196-74-1 grease.

5-63. INSTALLATION OF FLAP TRANSMISSION ASSEMBLY. (Refer to Figure 5-20.)

Ascertain that the correct flap transmission assemblies are being installed by checking the part numbers on the assemblies with information in the latest Parts Catalog. The reason for this is to prevent the possible use of different transmissions with different gear ratios, such as one 20: 1 transmission and one 40: 1 transmission used on the same airplane flap installation.

a. Lubricate the flap transmission assembly in accordance with lubrication chart.
b. Insert the transmission through the access opening in the wing false spar and attach to its mounting brackets. To allow the transmission to rotate, tighten the attachment bolts (28) only finger tight and safety.
c. Install the spreader bushing with one washer between each mounting bracket and bushing. Install the through bolt and secure.
d. If working with the left transmission (7), connect the flexible actuator shaft (6) (per Paragraph 5-60) and safety with .040 safety wire. Attach the right flexible shaft (4) during rigging and adjustment.
e. Check the flap rigging and adjustment per instructions given in this section.
f. Install access plates.

5-64. REMOVAL OF FLAP POSITION SENDER. (Refer to Figure 5-20.)

a. Lower the flap and remove the access plates on the left wing false spar at stations 92.50 and 101.
b. Loosen the sender arm (22) and the flap position actuator (14) on the sender shaft (21).
c. Disconnect the electrical leads from the sender (23).
d. Loosen the sender attachment nut and slide the sender from its mounting bracket.
e. The Flap limit switches (20 and 25) and the flap approach position switch (24) may also be removed through the access opening.

5-65. INSTALLATION OF FLAP POSITION SENDER. (Refer to Figure 5-20.)

a. Start the sender shaft (21) through its mounting bracket hole and install the attachment washer and nut over the shaft. Continue to slide the shaft through the hole and install the arm (22) and actuator (14) on the shaft. Secure the sender (23) in position. Allow the sender arm (22) and the actuator (14) to be free to rotate.

b. Connect the electrical leads.

c. Check rigging and adjustment per instructions given in this section.

5-66. RIGGING AND ADJUSTMENT OF FLAP. (Refer to Figure 5-20.)

a. Remove the access plate on the right wing false spar at station 92.50 and on the left wing false spar at stations 92.50 and 101.

b. The rigging and adjustment of the flap may be accomplished by the following procedure:

1. Ascertain that the flexible actuator shaft (6) to the left transmission assembly (7) is connected and safetied and that the right shaft (4) is disconnected from the right transmission (3). (Refer to Paragraph 5-60.)

2. Ascertain that the position sender arm (22) is free to rotate on the sender shaft (21) or the linkage rod (15) is disconnected at the flap and taped back inside the wing.

3. With the flap disconnected from the transmission tube (19), turn the actuator tube out 28 turns from its forward stop position; align the attachment hole in the tube with the holes in the flap horn and temporarily install bolt (18).

4. Check alignment of the actuator and flap horn (17) by sighting along the actuator tube (19) while the flap is in both the near extended and retracted positions. Do not run flap to its extreme position (end of tracks).

5. Should the tube (19) and horn (17) not align, disconnect the tube and loosen the bolts securing the horn to the flap enough to allow the horn to be moved by tapping with a soft hammer. Connect the tube to the horn and tap the horn to achieve a satisfactory alignment. Lower the flap to the near extended position; disconnect the tube from the horn and torque the horn attachment bolts.

6. With the actuator tube (19) and flap horn (17) aligned, connect the tube to the horn with bolt assembly (18). Tighten the castellated nut so as to allow .03 inches thrust play of the bolt and safety.

7. Connect the right flexible actuator shaft (4) to the right transmission assembly (3). (Refer to Paragraph 5-60.)

8. With the right flap disconnected from the transmission tube, turn the right tube out as far as necessary to give the right flap the same angular setting as the left flap. (Rigging the right flap to the left flap may require a smaller angular adjustment than can be accomplished by rotating the transmission actuator sleeve 180° on the screw. This can be done by disconnecting the flexible shaft from the transmission and turning the transmission worm gear with a short slot head screwdriver.)

NOTE

When measuring flap deflection angles, lift the trailing edge of the flap to eliminate play between rollers and track slots.

c. The adjustment of the flap limit switches may be accomplished by the following procedure:

1. Run the flaps to the full down position and if not previously accomplished, loosen the screw that clamps the sender arm (22) on the sender shaft (21).

2. Laterally locate the arm on the sender shaft so the adjustment bolts (26 and 27) on the arm (22) will contact the limit switch (20 and 25) plungers in the center of the bolt head.

3. Tighten the arm clamping screw (30) in such a way that moving the arm (22) will rotate the sender shaft (21), but the arm will slip on the shaft if the shaft is securely held.

4. Connect the linkage rod (15) to the tab on the flap using the rod attachment bushing (16) and screw with nylon insert. The rod should extend through the bushing (16) and screw with nylon insert. The rod should extend through the bushing .12 of an inch.

5. Adjust the flaps to extended settings as given in Table V-I by loosening the jam nut on the proper adjustment bolt (27) and turning in or out as required to actuate the down limit switch (20). Tighten the jam nut.

6. Run the flap up to a near retracted position. Make a full extension run to insure that the momentum of the flap going down and tightening of the jam nut has not moved the flap setting from the setting tolerance.

7. Adjustment of the up limit switch (25) is accomplished in the same manner except that the flaps should be stopped in the retracted position just as the flap rollers approach the end of track slots. (Approximately 1/16 of an inch on the closest roller both flaps.)

8. Laterally locate the approach switch arm (14) on the sender shaft so the arm will contact the roller on the switch actuator in the center. Position the arm on the sender shaft as shown in Figure 5-20, Sketch D.

d. Check the adjustment of the flap position indicator.

e. Refer to Section III, for information on reduction of friction and for wing flap motor no load RPM check if operational problems exist in the flap system.

f. Flexible shaft assemblies disconnected from transmissions or from flap motor necessitates a check of the clearance between the inner cable and outer cable sheath with the transmission end of the cable connected per Paragraph 5-60.

g. Check that all necessary bolts are safetied, clamps secured and access plates installed.

5-67. RIGGING AND ADJUSTMENT OF FLAP POSITION SENDER.

a. Lower the flaps and remove the access plates on the left wing false spar at stations 92.50 and 101.

b. Lower the flaps to an angle of 15° ± 1° (lift flap trailing edge to obtain angle measurement); loosen sender arm (22) on the sender shaft (21) and rotate the shaft until the wing flap indicator on the instrument panel shows the flap at the takeoff position (bottom of white arc).

c. Tighten the arm (22) on the sender shaft. Check the three flap positions (retracted, takeoff and extended) with respect to the angular settings and indicated positions on the wing flap indicator.

d. Position the approach switch arm (14) on the sender shaft per instructions given in Paragraph 5-66. Check that the approach flap switch (24) is activated when the flaps are lowered to 15° ± 1° (lift flap trailing edge to obtain angle measurement).

e. Install the access plates.

5-68. ADJUSTMENT OF FLAP SELECTOR SWITCHES. (Refer to Figure 5-21.) The flap selector switches are located on the forward side of the instrument panel directly behind the flap selector handle. There are two switches used in this installation; the larger switch is identified on the electrical schematic (of Section XV) as SW-1 while the second switch (smaller) is SW-2. Adjustment should be made with the switch assembly removed from the instrument panel.

a. With switch SW-1 in its center position, adjust the bottom set screw (2) on the actuator bracket (4) until it just touches the toggle of switch SW-2 which must have its toggle in the down position; then lock the set screw.

b. Move the selector actuator (1) to actuate switch SW-2 with set screw (2); return the actuator to its center position.

c. Adjust the top set screw (5) until it just touches the toggle of switch SW-2; then lock the set screw in place.

d. Move the selector actuator (1) in both extreme positions, full up and full down to assure that switch SW-2 is actuated in both extreme positions, but not actuated in the center position.

5-69. INSPECTION OF TIME DELAY SWITCH OPERATION. (Between Left Wing Stations 97.50 and 109.50.) This inspection should be done after the flaps have been rigged and checked for normal operation. The time delay switch is installed in the flap electrical system so that when the flap switch is actuated (flaps completely extended or retracted), and if after one second the left flap does not move off the limit switches, the time delay switch shuts off the flap motor. The right flap will travel approximately 4.5° ± 1°.

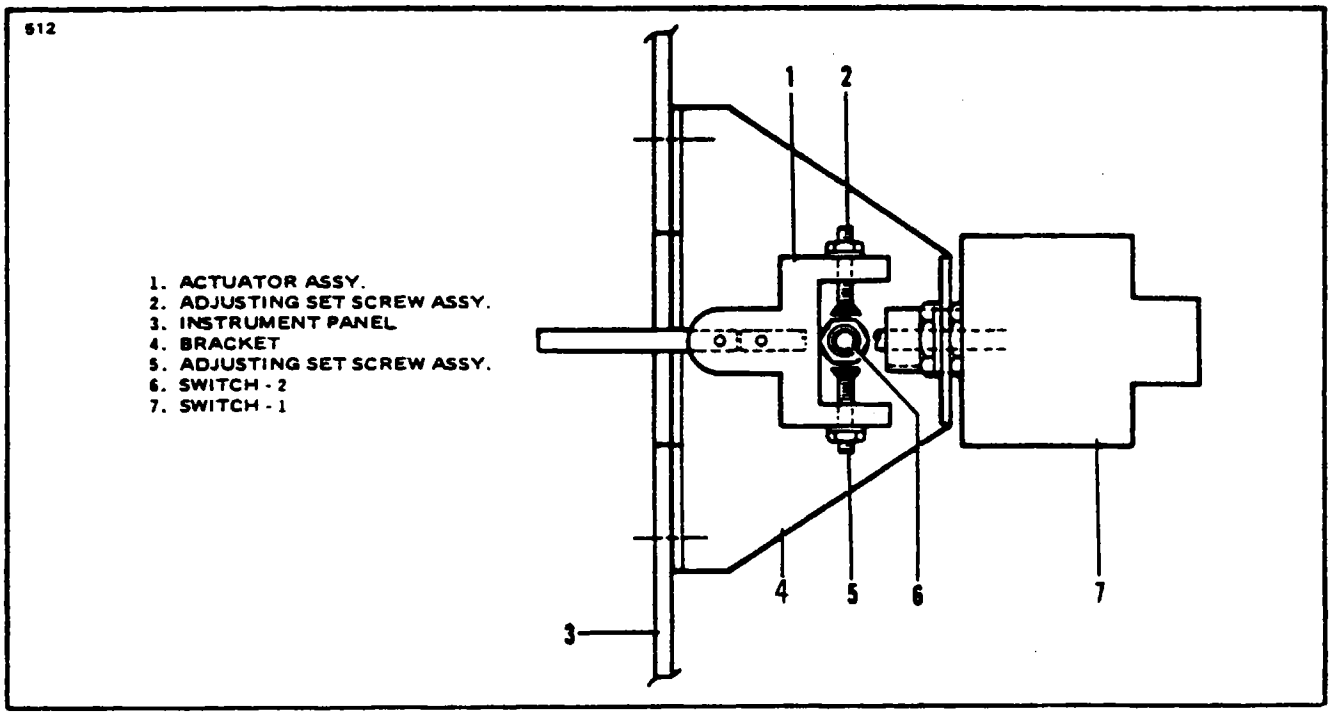

Figure 5-21. Flap Selector Switch (Piper System)

a. Lower the flaps and remove the access plates to the limit switches in the left wing false spar at stations 92.50 and 101.

b. With the flaps part way down, depress the up limit switch and select flap down. The system should shutdown within one second. With the limit switch still depressed (if the limit switch is opened, the time delay switch will reset and allow the system to become operative), return the flap selector switch to neutral position and again select flaps down. The system should be inoperative. Determine that the flap travel was not more than 4.5° ± 1°.

c. Repeat Step b except depress the down limit switch and select flaps up. The system should again shutdown in one second and the flap travel should not exceed 4.5° ± 1°.

NOTE

The only way that further right flap extension can occur after the time delay switch shuts off the motor, is if the pilot would cycle the flap circuit breaker off and on, and again select flaps.

The time delay switch does not affect or shutoff the flap motor if a failure occurs when the left flap is between the up and down limit switches.

The time delay switch is passive in the flap electrical system during normal flap operation.

d. Reinstall the access plates in the left wing false spar at stations 92.50 and 101.

5-70. WING FLAP CONTROLS. (CALCO SYSTEM.) (Refer to Figures 5-22 and 5-31.)

5-71. DESCRIPTION AND OPERATION. The wing flap control system provides continuous control and monitoring of flap position and condition over its full range. In addition to the limiting of both up and down overtravel, the system will shut the driving mechanism off in the event of a 5° differential position between right and left flap position and it will self-monitor and automatically react appropriately in the event of critical component failure in the control circuitry.

Preselection of any desired flap position from full up (0°) to full down (40°) is possible thru the positioning of the selector control which has an 80° stroke analog lever. (That is, 2° of lever movement represents 1° of wing flap movement.) The selector incorporates a friction type drag brake to hold the lever at any desired intermediate position as well as ball lock detents at 0°, 15°, and 40° of flap extension. Flaps are deployed mechanically by a single motor driving through two flexible shafts connected to individual ball screw actuators.

Selection of the desired flap position moves RC relative to RL with a resultant amplifier output which will operate the flap motor through contactors K1 and K2 to move the left and right flaps to the desired position. If at any time the amplifier sees a differential voltage in excess of 0.55 VDC between RL and RR, the amplifier will shut the system off. This condition corresponds to a maximum differential of 5° of flap position.

A flap fault test switch is provided to check the control circuitry for asymmetrical flap protection as well as the operation of the fault lamp switching transistor. The activation of this switch while flaps are in motion will give a false signal to the right side follower potentiometer, simulating an out-of-sync condition causing the amplifier to shut the system off and illuminate the fault light. Release of the switch will clear the simulated fault and allow the system to respond normally to selector position command.

5-72. REMOVAL OF FLAP ACTUATOR MOTOR. (Refer to Figure 5-24.)

a. Remove the center floor panel located in the main cabin area. The flap actuator motor (5) is located on the forward side of the fuselage bulkhead at station 174.

b. Disconnect the electrical leads from the motor.

c. Cut the safety wire (12) and disconnect the flexible drive shaft ends (4 and 6) from the motor.

d. Remove the clamp (9) that holds the motor on its mounting bracket (13). Remove the motor.

e. If desired to replace the shock grommets in the bulkhead, the motor with its mounting bracket may be removed together by removing the bracket mounting bolts at the bulkhead.

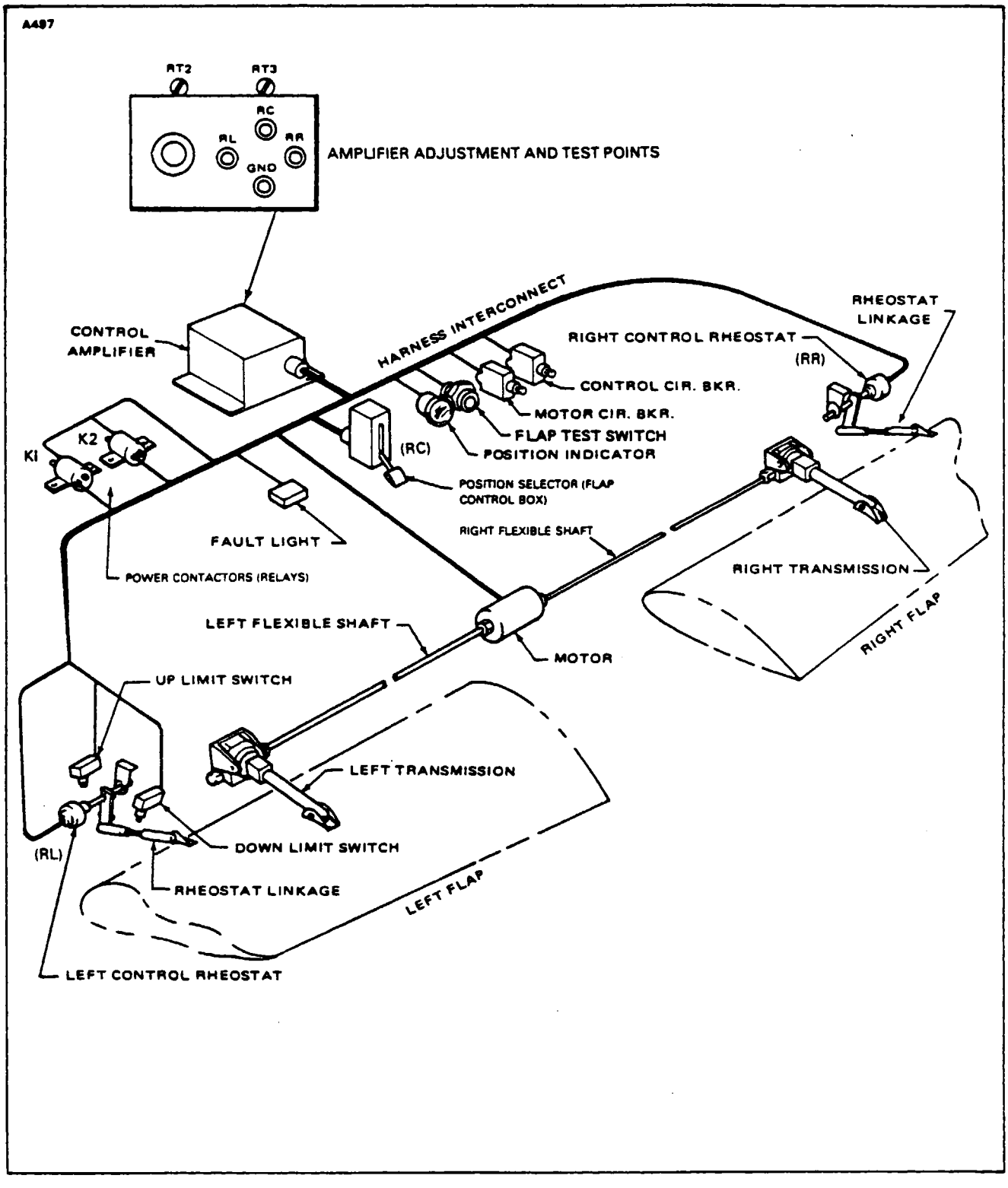

Figure 5-22. Flap System Diagram (Calco)

5-73. DISASSEMBLY OF FLAP ACTUATOR MOTOR. (Refer to Figure 5-23.)

a. Remove nuts (2), lockwashers (3) and screws (4) from motor.
b. Remove rear end bell (1) from sleeve and magnet assembly (18).
c. Remove front end bell (5) from sleeve and magnet assembly.
d. Remove armature assembly (17) from sleeve and magnet assembly.

CAUTION

Strong magnet pull will be encountered when removing the armature from the sleeve and magnet assembly.

e. Remove spring washer (16) and ball bearing (15) from armature shaft.
f. Remove brushes (6) and brush springs (7) from brush holders.
g. Remove four screws (9) and insulator assembly (8) from front end bell (5).
h. Remove nuts (11), lockwashers (12), contact studs (10) and nylon shoulder washers (13) from front end bell.

5-74. SERVICE OF FLAP ACTUATOR MOTOR.

a. Wash all disassembled parts except brushes, bearings and armature with a suitable dry cleaning solvent.
b. Examine all parts for cracks, burrs and corrosion.
c. Visually inspect the armature for the following:
   1. Commutator for pitting, scoring or burning.
   2. Loose windings.
   3. Damaged or worn splines.
   4. Worn shaft caused by bearing seizure.
d. Except for repairs to commutator, all parts found to be defective or worn must be replaced with new parts. Do not attempt to repair defective parts. Ball bearings must be replaced at overhaul.
e. Commutator may be turned down to a minimum diameter of 1.093 inch. Polish with fine grade sandpaper.
d. Measure length of brushes. If less than .437 inch they must be replaced.
g. Electrically test the armature as follows:
   1. Bar to bar continuity. Resistance readings should be the same when measuring two adjacent bars as measurement is stepped around commutator.
   2. Insulation resistance between commutator and shaft should be 10 megohm minimum at 85v.

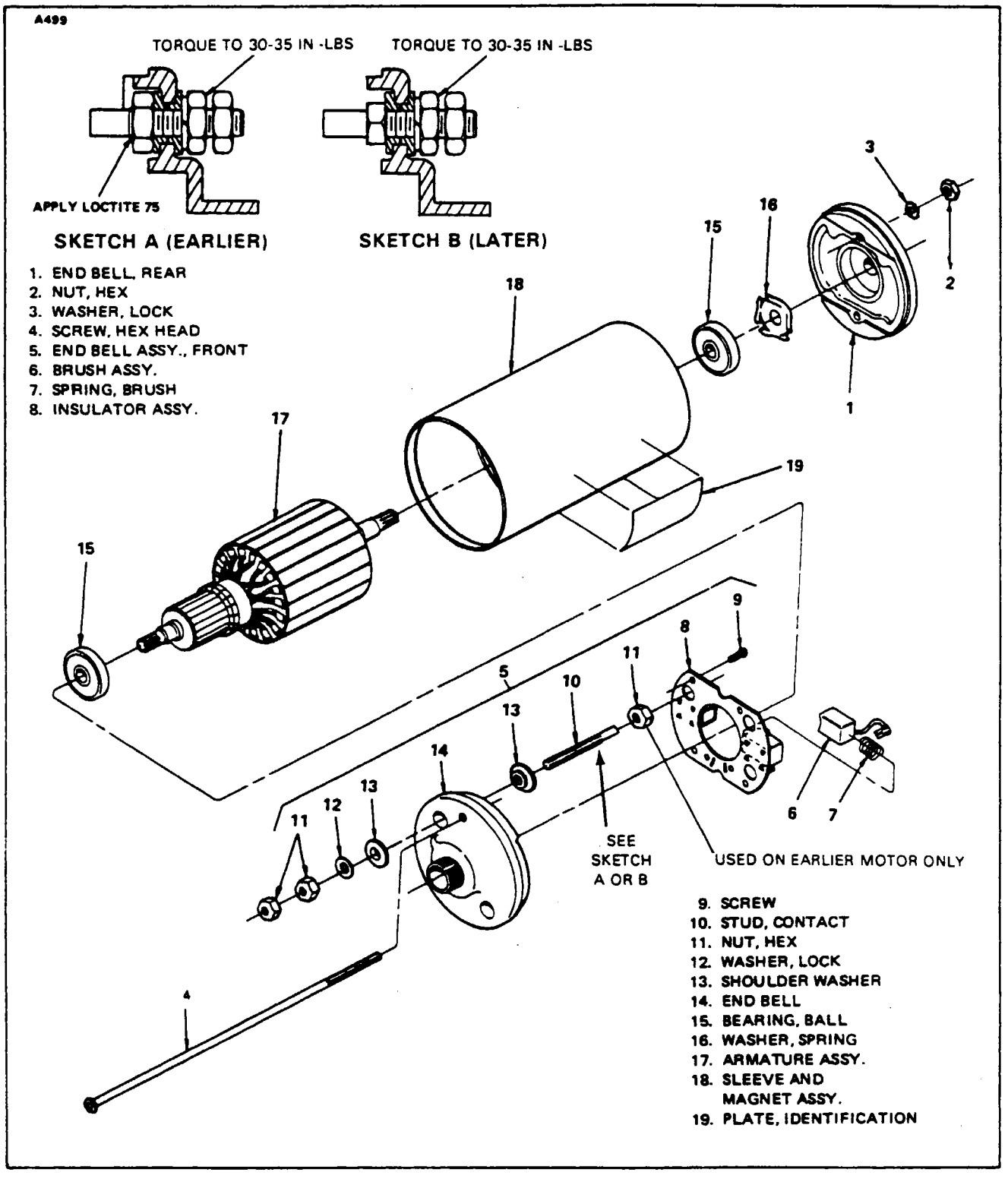

Figure 5-23. Motor Assembly, Exploded View (Calco)

5-75. ASSEMBLY OF FLAP ACTUATOR MOTOR. (Refer to Figure 5-23.)

a. Assemble shoulder washers (13), contact studs (10), lockwashers (12) and nuts (11) to front end bell. Position flat on contact studs parallel to the side of the brush holder. Apply Loctite 75 adhesive to inner nut (11) (see Sketch A of Figure 5-23) and torque outer nut (11) to 30-35 in.-lbs.

b. Install insulator assembly (8) on front end bell and secure with 4 screws (9).

c. Install brush springs (7) and brush (6) into brush holders. Position brush leads through slot towards center of end bell and connect to contact studs.

d. Attach ball bearings (15) to each end of the armature shaft.

NOTE

A light press fit on the bearings may be required on the shaft.

e. Install front end bell assembly onto commutator end of armature.

f. Insert armature assembly into sleeve and magnet assembly (18) with commutator end of armature towards larger recess in motor sleeve.

CAUTION

A strong magnet pull will be encountered when inserting armature assembly into sleeve and magnet assembly.

g. Position front end bell on sleeve so that mounting holes are in line with pin in sleeve and lockwire hole is to the right of the pin.

h. Insert spring washer (16) into bearing bore of rear end bell (1) with tangs on washer pointing up.

i. Install rear end bell on sleeve with mounting holes lined up with pin in sleeve and lockwire hole to the left of the pin.

j. Insert screws (4) through front end bell (5) and rear end bell (1). Secure with lockwashers (3) and hex nuts (2). torque nuts (2) 30-40 in. lb.

5-76. INSTALLATION OF FLAP ACTUATOR MOTOR. (Refer to Figure 5-24.)

a. Install the shock grommets in the bulkhead at station 174.

b. Install the flap actuator motor (5) and bracket (13) on the forward side of the bulkhead. Ascertain that the anti-rotation pin on the motor fits in the pinhole in the mounting bracket. Secure the holding clamp (9).

c. Connect the flexible drive shaft ends (4 and 6) to the motor and attach nut (10) finger tight and secure with MS20995-C41 safety wire (12).

d. Connect the electrical leads.

e. Check flap rigging and adjustments per instructions given in this section.

f. Install access plates and panels.

5-77. REMOVAL OF FLEXIBLE ACTUATOR SHAFT. (Refer to Figure 5-24.)

a. Remove the center floor panel located in the main cabin area.

b. Remove the right and/or left row of seats and floor panels aft of the main spar.

c. Remove the aft access plate on the fairing located on the underside between the fuselage and wing.

d. Remove the access plates at the aft side of the wheel well at stations 34.50, 44.50 and 54, and on the underside of the wing at stations 65, 82.75 and 92.50.

e. Cut the safety wire (12) and disconnect the shaft (4 and 6) from the actuator motor (5) and flap transmission (3 and 7).

f. Remove the support clamp on the fuselage bulkhead and the support grommets within the wing and fuselage.

g. Remove the actuator shaft.

5-78. INSTALLATION OF FLEXIBLE ACTUATOR SHAFT. (Refer to Figure 5-24.)

a. Draw the shaft (4 or 6) through the wing into the fuselage.

b. Connect the flexible drive shafts to the transmissions. Be sure that the splines are properly engaged and run the shaft attaching nut on finger tight. Safety the nut with MS20995-C41 safety wire.

c. Check the flap rigging and adjustments per instructions given in this section.

d. Install the access plates, panels, clamps, grommets and seats.

5-79. REMOVAL OF FLAP TRANSMISSION. (Refer to Figure 5-24.)

a. Lower the flap and remove the access plate on the aft underside of the wing and at the false spar area, both of which are at station 92.50.

b. Disconnect the transmission tube (18) from the flap horn bracket (16).

c. Remove the safety wire (12) and disconnect the flexible actuator shaft (4 and 6).

d. Remove the spreader bushing and washers (15) from between the transmission attachment brackets.

e. Remove the transmission from its mounting brackets and draw the unit through the access opening in the wing false spar.

5-80. DELETED.

5-81. SERVICE OF FLAP TRANSMISSION.

a. Wash all parts in a suitable dry cleaning solvent.

b. Examine all parts for cracks, burrs and corrosion.

c. Parts are not available to repair the transmission in the field. Therefore the transmission should be replaced (if defective).

5-82. DELETED.

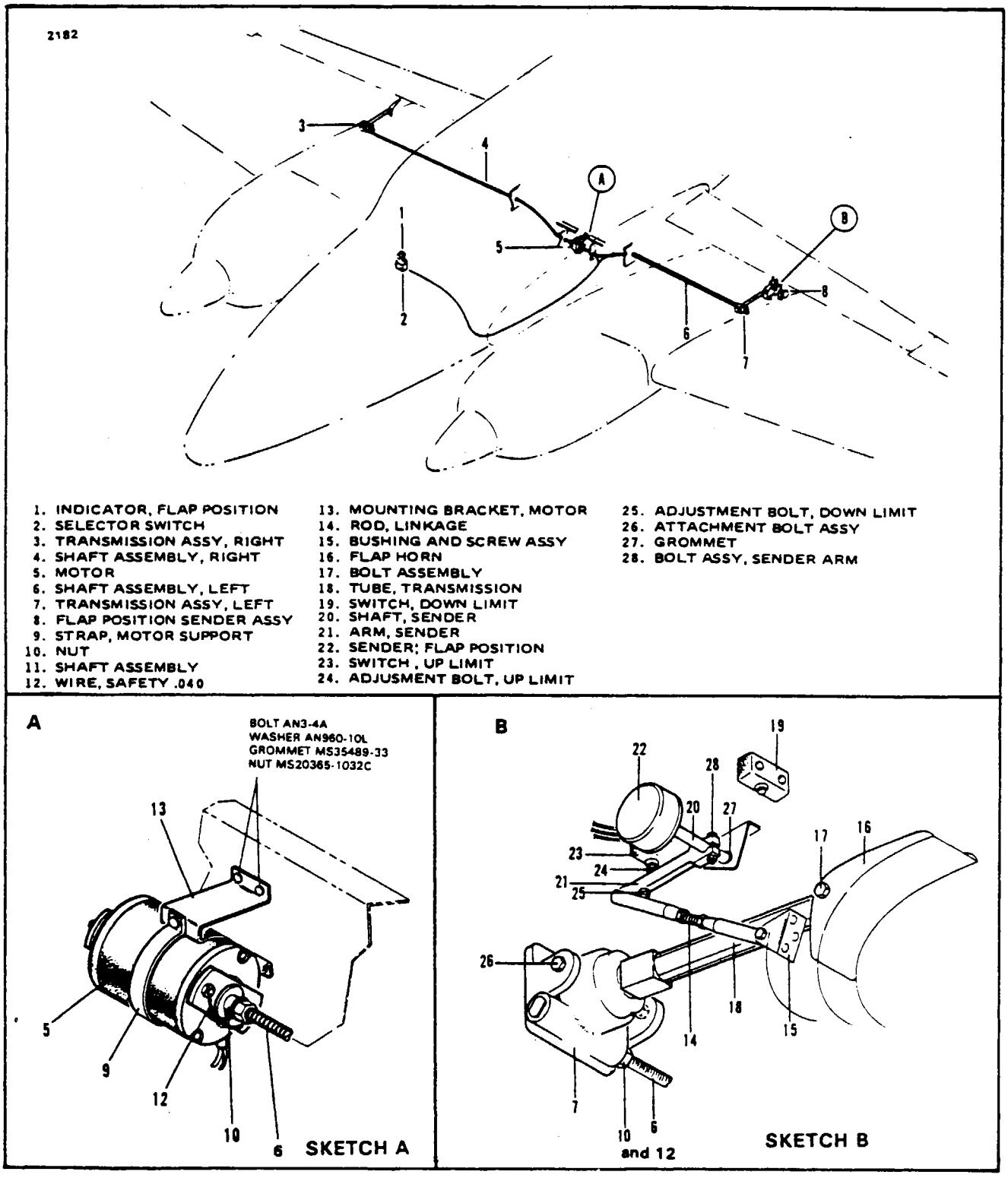

Figure 5-24. Flap Controls (Calco)

5-83. FUNCTIONAL TEST OF FLAP TRANSMISSION.

a. Test equipment required:
   1. Tool 7801-T3
   2. Torque Wrench

b. Check no load torque as follows:
   1. Attach torque wrench to input pinion.
   2. Measure torque to rotate pinion with no load applied to screwjack.
   3. No load torque to be 12 in. oz. maximum.

c. Lockwire (MS20995-C20) all bolts and screws.

d. Install protective cap (15). Do not lockwire.

5-84. INSTALLATION OF FLAP TRANSMISSION. (Refer to Figure 5-24.)

Ascertain that the correct flap transmission assemblies are being installed by checking the part numbers on the assemblies with information in the latest PA-31T Parts Catalog.

a. Lubricate the flap transmission assembly in accordance with lubrication chart.

b. Insert the transmission through the access opening in the wing false spar and attach to its mounting brackets. To allow the transmission to rotate, tighten the attachment bolts (26) only finger tight and safety.

c. Install the spreader bushing with one washer between each mounting bracket and bushing. Install the through bolt and secure.

d. If working with the left transmission (7), connect the flexible actuator shaft (6) and safety with MS20995-C41 safety wire. Attach the right flexible shaft (4) during rigging and adjustment.

e. Safety wire (MS20995-C20) Protective Cap.

f. Check the flap rigging and adjustment per instructions given in this section.

g. Install access plates.

5-85. REMOVAL OF FLAP CONTROL BOX (SELECTOR).

a. Remove the knob from the control box.

b. Remove the electrical connector from the rear side of the control box.

c. Remove the two screws that secure the control box to the instrument panel.

d. Remove the control box from the instrument panel.

NOTE

It is recommended that the flap control box (selector) be sent back to the manufacturer for servicing. Environ Division of Calco MFG. Co., 205 Factory Road, Addision, IL 60101 (312) 628-2330.

5-90. INSTALLATION OF FLAP CONTROL BOX (SELECTOR).

a. Install the flap control box in the instrument panel.
b. Install the two screws that secure the control box.
c. Connect the electrical leads.
d. Install the knob.

5-91. REMOVAL OF FLAP CONTROL AMPLIFIER.

a. Gain access to amplifier located under the floor panels on the PA-31T and PA-31T1 and in the nose section on the PA-31T2.
b. Disconnect the electrical plug from the amplifier.
c. Remove the attaching screws and remove the amplifier from the airplane.

5-92. INSTALLATION OF FLAP CONTROL AMPLIFIER.

a. Install control amplifier in airplane and secure with attaching screws.
b. Connect the electrical plug to the amplifier.
c. Check rigging and adjustment of flaps per information given in this section.
d. Close and secure access door.

5-93. RIGGING AND ADJUSTMENT OF FLAPS. Following are definitions of terms used in the description and service information presented in the following paragraphs:

RC = Control Potentiometer Wiper at Selector
RL = Left Wing Flap Potentiometer Wiper
RR = Right Wing Flap Potentiometer Wiper
VC = Voltage at RC (Control)
VL = Voltage at RL (Left Flap)
VR = Voltage at RR (Right Flap)
ΔVCL = Voltage difference between VC and VL at flap up position
ΔVCR = Voltage difference between VC and VR at flap up position
ΔVRL = Voltage difference between VR and VL
RT2 = Amplifier Trimmer Adjustment - Left
RT3 = Amplifier Trimmer Adjustment - Right

The control rheostat operated by the flap selector will be referred to throughout this rigging procedure as RC (rheostat control). The wing flap rheostats will be designated as RL (rheostat left) and RR (rheostat right). The voltages present or read at the center taps will be referred to as VC, VL and VR respectively.

Proper operation after rigging, requires that the rheostat (RL) on the left flap must respond to any changes in the flap position selector rheostat (RC) in the form of VL and VC. It follows that the amount of stroke travel, as well as how it is centered with respect to the ends, will be determined by how RL is adjusted relative to RC. Since VC is fixed and cannot be changed, a trimmer pot RT2 is provided in the control amplifier to allow adjustment of VL to agree with VC.

Throughout all of the adjustment procedures it is important that, whatever changes are made to RL and RT2, must also be made to RR and RT3. It is the function of RR to track RL over the entire stroke range and shut the system OFF if the outputs in the form of VL and VR deviate by more than 0.55-volts. This voltage differential (ΔV) corresponds to a five-degree asymmetrical flap condition. An additional function of RR is to provide a voltage input to the control amplifier in order to provide an output to the flap position indicator.

All adjustments are made with the motor circuit breaker pulled (off) and the flaps in the down position. Adjustment procedures will require a digital voltmeter.

NOTE

In general, the adjustments of RL, RR, RT2 and RT3 are always made with the flaps in the DOWN position and the magnitude of these adjustments will be based on the values of VC, VL and VR measured with flaps in the UP position.

WARNING

All adjustments must be made with the motor power off.

CAUTION

Ascertain that all electrical power to the flap control system is OFF. (Pull flap control and motor circuit breakers, set battery master switch OFF and have no external power applied to the aircraft.)

1. Remove access plates on the false spar at wing stations 92.50 and 101.0 for both right and left wings.
2. Remove access plates on the bottom of the wings at wing stations 82.75 and 92.50.
3. Ascertain that the flap position sender arm is free to rotate on the rheostat shaft and that the linkage rod is set at the proper length. (See Figure 5-30, Sketch A.)
4. With the transmission assemblies NOT attached to the flaps and turned in all the way to the ball nut seat, ascertain that the flaps are free to roll full travel on the flap tracks.
5. By manually moving the flap, adjust the UP limit actuating bolt so that the switch is actuated with .03 inch maximum gap between the rollers and the end of the flap track slots. (See Figure 5-30, Sketch B.)

NOTE

It is the intent here that the electrical limit be reached just prior to the mechanical bottoming-out of the rollers in the slot.

6. Repeat the procedure of Step 5 preceding, to adjust the DOWN limit switch. (See preceding NOTE.)
7. With the flaps resting on a .06 inch diameter rod between the rollers and the end of the flap track slots, turn the transmission sleeves out from their forward stops approximately 32 turns, align the attachment holes in the sleeves with the holes in their respective flap horns and temporarily install the attachment bolts. The difference in the number of turns between the right and left transmissions should not exceed 1/2 turn.
8. Check for proper alignment of sleeve and flap horn. Should the sleeve and horn not align, loosen the bolts attaching the horn to the flap enough to allow the horn to be moved by tapping to achieve proper alignment. Retorque horn attachment bolts.
9. With the sleeve and horn properly aligned, connect the sleeve to the horn with bolt and castellated nut. Tighten the nut so as to allow .03 inches thrust play of the bolt. Install cotter pin.
10. Connect the flexible drive shafts to the transmissions. Be sure that the splines are properly engaged and run the shaft attaching nut on finger tight. Safety with MS20995C41 wire.
11. Remove the covers from RT2 and RT3 on flap control amplifier and ascertain that both trimmers are in their full clockwise position (maximum resistance).
12. Apply external power to the aircraft and establish bus voltage at 28 ± .5-volts.
13. Place the flap selector in the DOWN position.
14. Engage flap control circuit breaker - DO NOT engage flap motor circuit breaker at this time. Allow five minute warm-up time.
15. Measure VC voltage at RC and adjust voltages VL and VR to 0.20-volts below VC by rotating the shafts on rheostats RL and RR in the wings. (If VC is 9.0; VL and VR are to be 8.80-volts.)
16. Lock actuator arms on rheostat shafts. Remeasure VC, VL and VR to be sure they are still the same values. Readjust if necessary. Record voltages on work sheet.
17. Move flap selector to the UP position. Listen for audible click of motor solenoid. If solenoid does not actuate check wiring for proper interconnect.

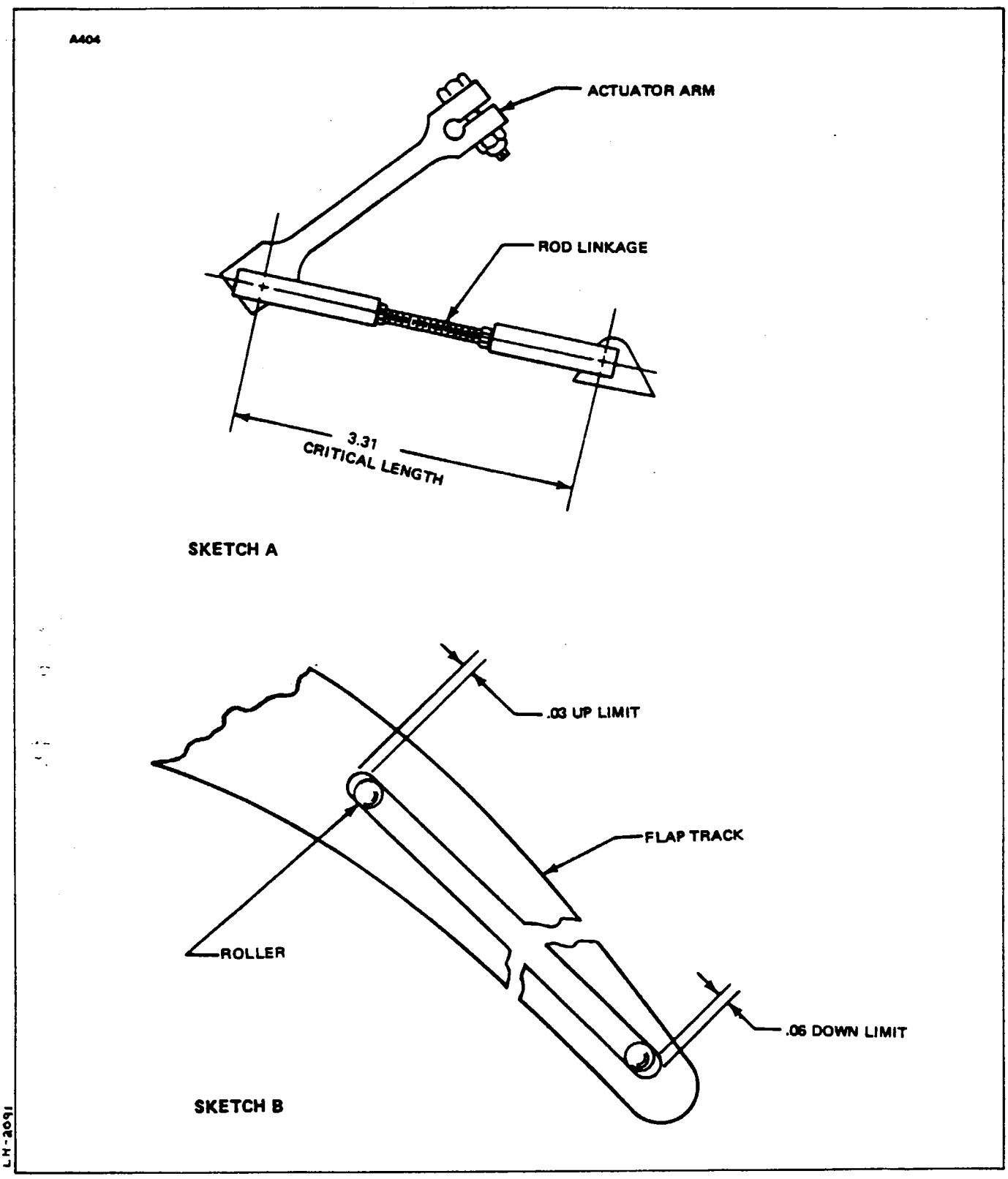

Figure 5-25. Flap Rigging Adjustment (Calco)

18. Move flap selector back to full DOWN position.

19. Engage flap motor circuit breaker and move selector to full UP flaps. When the flaps stop moving (actuating arm may not engage the UP limit switch) record system voltages on a work sheet as follows:

	VC	VL	VR
DOWN Position	X·XX	X·XX	X·XX
UP Position	X·XX	X·XX	X·XX

20. The values at the DOWN position have already been established for VC, VL and VR in Step 15. At this time enter the readings for VC, VL and VR at the UP position. The work sheet might now resemble the following example (Voltage values used in this example are for illustrative purposes only. They are NOT system requirements):

	VC	VL	VR
DOWN Position	9.15	8.95	8.95
UP Position	4.06	*4.42	*4.36

(a) *If VL and VR in the preceding example differ by more than .5-volts, an out of sync. shutdown has occurred due to an actuator arm being loose on the rheostat shaft. If this has happened, select flaps full DOWN and place a jumper wire between RL and RR at the amplifier. Pull flap motor circuit breaker and readjust voltages at RR and RL as per Step 15 and begin again.

(b) *If VL is equal to or less than VC, the system has shutdown because the amplifier sees that voltage inputs from position selector (VC) and the position sensor (VL) have been satisfied.

21. If the system has completed a full stroke (up limit switch has been engaged) and the flap position indicator reads correctly, no further adjustment is necessary. (It is considered acceptable if the indicator pointer centerline is even with the upper or lower edge of the indicator graduation mark.) If position and/or indicator criteria are not satisfied, proceed as follows:

CAUTION

No adjustments are to be made at the wing rheostats (RL and RR) until the flap motor circuit breaker is pulled.

(a) VL at the UP position should be equal to VC (within .1-volts, +0-.05-volts). From the example in Step 20 preceding, it can be seen that VL is too high in relation to VC by .36-volts.

(b) In order to correct this condition, it is necessary to adjust the value of VL both mechanically and electrically while in the DOWN position as follows:

(1) While in the DOWN position (VL should again read 8.95-volts), loosen the actuator arm on RL and mechanically rotate the RL shaft until the VL reading is reduced by twice the difference between VC and VL noted in example of Step 15 in preceding Paragraph 5-93. (i.e. 8.95 - (2x.36) = 8.95 - .72 = 8.23-volts.)

(2) With the VL voltage at 8.23-volts, tighten the actuator arm on the RL shaft and return VL electrically to its original value of 8.95-volts (.2-volts less than VC which is 9.15-volts) by turning the trim pot RT2 in the amplifier counterclockwise.

22. Make the same adjustment to RR in the same sequence as done on RL, i.e., first mechanically to twice the difference of the voltage error, then electrically (with RT3) back to the original value (of 8.95-volts). However, VR may be adjusted to within .01-volts of VC in order to give a correct indicator presentation.

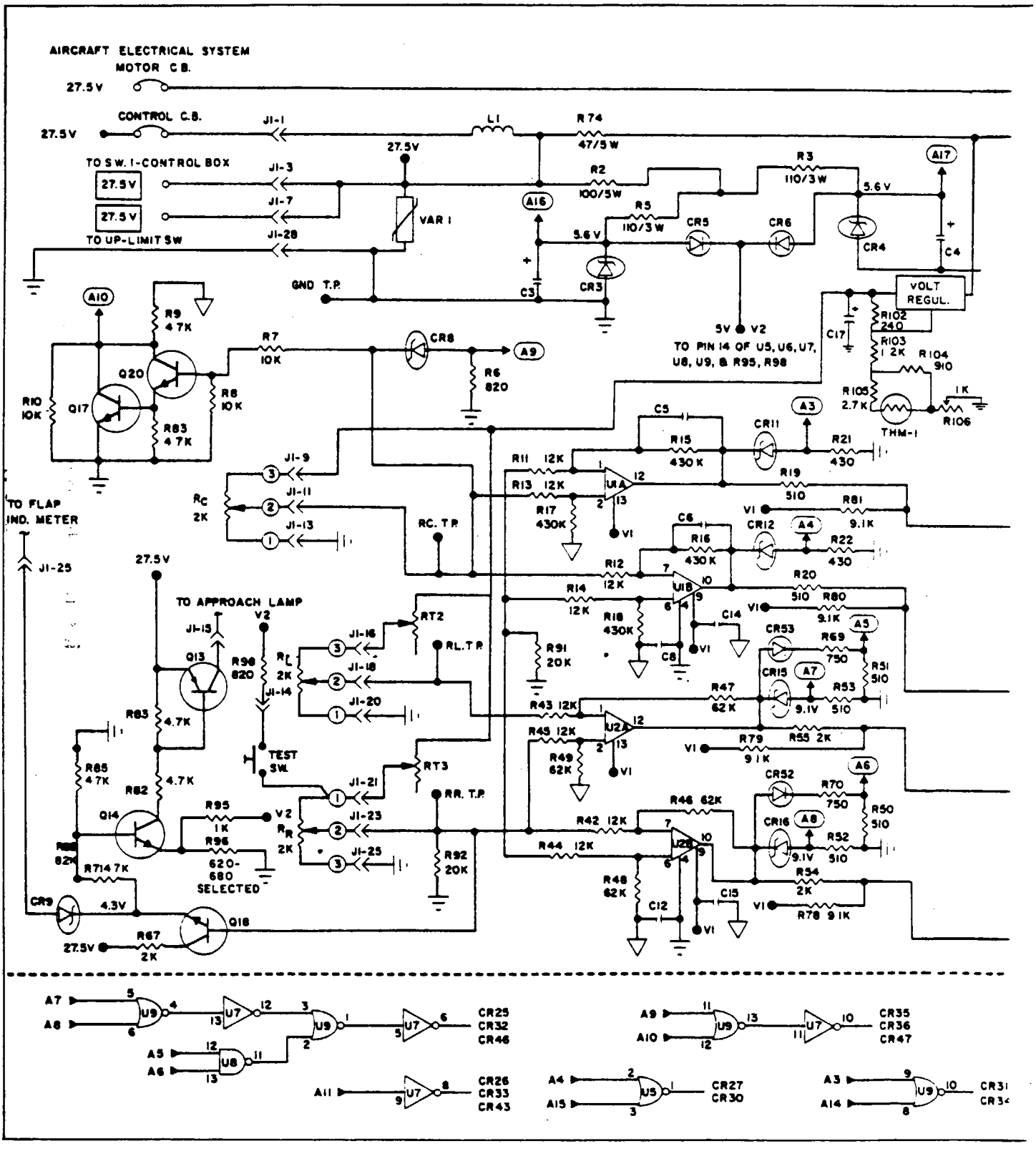

Figure 5-26. Amplifier - Electrical Schematic, P/N 8482 (Calco)

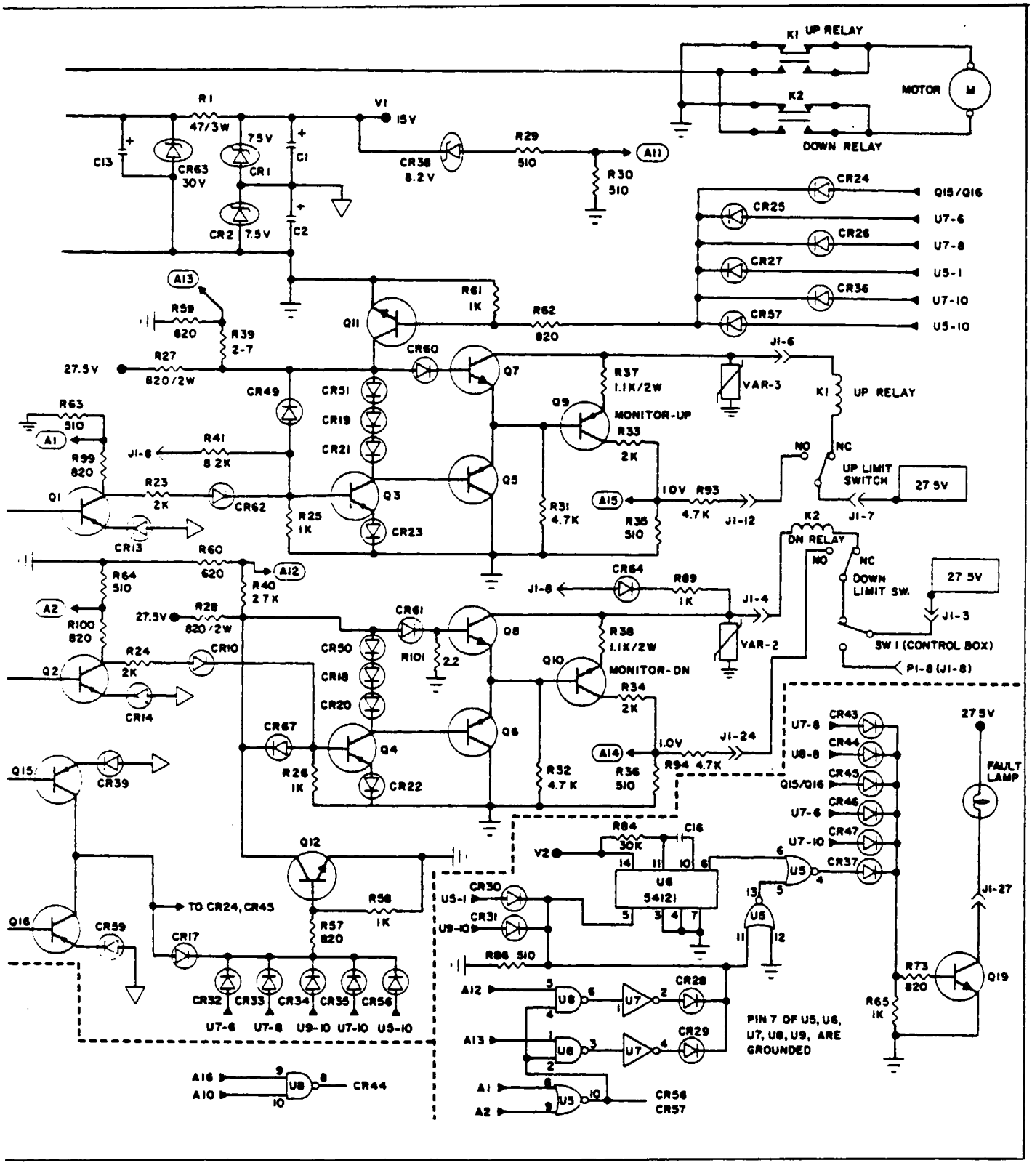

Figure 5-26. Amplifier - Electrical Schematic, P/N 8482 (Calco) (cont.)

23. Reinstate flap motor circuit breaker and select flaps full UP. Record voltages as per Step 19 and repeat procedures if required. No more than two repeats should be necessary.

24. After the system is properly rigged for stroke and position indication, place the positive probe of the digital voltmeter in "RR" at the amplifier and the negative lead in "RL". Select the flaps full DOWN and monitor the voltage throughout the extension. Voltage is not to exceed .15-volts at any time.

NOTE

The system should be allowed to warm-up for approximately five minutes before making any electrical adjustments.

25. It is considered to be a proper flap position indication if the centerline of the indicator pointer is within (or even with) the edges of the target instrument marking.

5-94. ELECTRICAL SYSTEM FUNCTIONAL TEST PROCEDURE.

NOTE

The serviceman should refer to Figure 5-31 for the schematic diagram of the flap amplifier and Sections 7 and 8 for complete electrical system when accomplishing this test procedure. To gain access to the system components refer to the appropriate Removal and Installation Instructions in this section of the manual.

a. Pull all Circuit Breakers to the OUT position.

b. Actuate the Flap Motor and Flap Control Circuit Breakers.

c. Turn ON Battery Master Switch or connect External Power to aircraft.

d. Operate the flap selector handle in the control box and observe UP and DOWN operation of wing flaps.

e. If the wing flaps fail to operate, check fault light. If fault light is ON proceed to step m. If fault light is OFF proceed to step f.

f. Check for 27.5 volts at motor contactor and Pin 1 of connector J1 (Conn. E368, airframe harness) to verify circuit breakers and wiring are not defective.

g. Check for 27.5 volts across power terminals of both K1 and K2 relays.

h. Disconnect the flex shaft(s) from the motor assembly.

i. If the drive motor fails to operate, check the UP and DOWN limit switches in the 27.5 volt leg of the coils of relays K1 and K2. Do this by checking for 27.5 volts at the N.C. contacts on the limit switches.

j. To check the drive motor and relay operation, disconnect the electrical harness plug connector E368 Ground relay K1 at pin 6 or relay K2 at pin 4 of the connector, then fabricate a jumper lead to extend from pin 1 (A+) of the connector to either wire lead F4E of relay K1 or wire lead F4D of relay K2 to actuate either the up or down relay and run the motor.

k. Check the 27.5 volt power at the drive motors while another person is energizing relays K1 and K2. If 27.5 volts is not present at the drive motor, the contacts of relays K1 and/or K2 are defective. Replace defective relay(s). If the drive motor operates by energizing relays K1 and/or K2 locally, the trouble is in the control box, the left wing potentiometer RL, the right wing potentiometer RR, or in the flap control amplifier.

l. Reconnect the flex shaft(s) to the motor assembly and connect the electrical harness plug to connector J1.

m. Pull the Flap Motor circuit breaker to prevent the flap motor from running for the remainder of the test procedure.

n. Using a precision voltmeter (10 volt range) connect the negative lead to the GND test jack of the amplifier and the positive lead to the RC test jack. Slowly operate the flap selector handle in the control box over its entire range. The voltage readings should be approximately + 9 volts in the down position and approximately + 4 volts in the up position.

o. If the RC voltage readings are too high or too low, the problem is either in the harness wiring or the control box. Test the harness wiring, if defective repair or replace the harness wiring. If the harness wiring is good replace the control box.

p. Connect the voltmeter between test jacks RR and RL on the amplifier. If this voltage exceeds 0.5-volts the shut down is due to flap asymmetry. Correct cause of asymmetry and rerig flap system.

q. If the problem is not located at this point, the amplifier is defective and must be replaced.

r. Turn Battery Master Switch OFF or remove External Power from the aircraft.

s. Connect flex shaft(s) to motor assembly. Flex shafts nuts must be lockwired to motor assembly.

THIS SPACE INTENTIONALLY LEFT BLANK

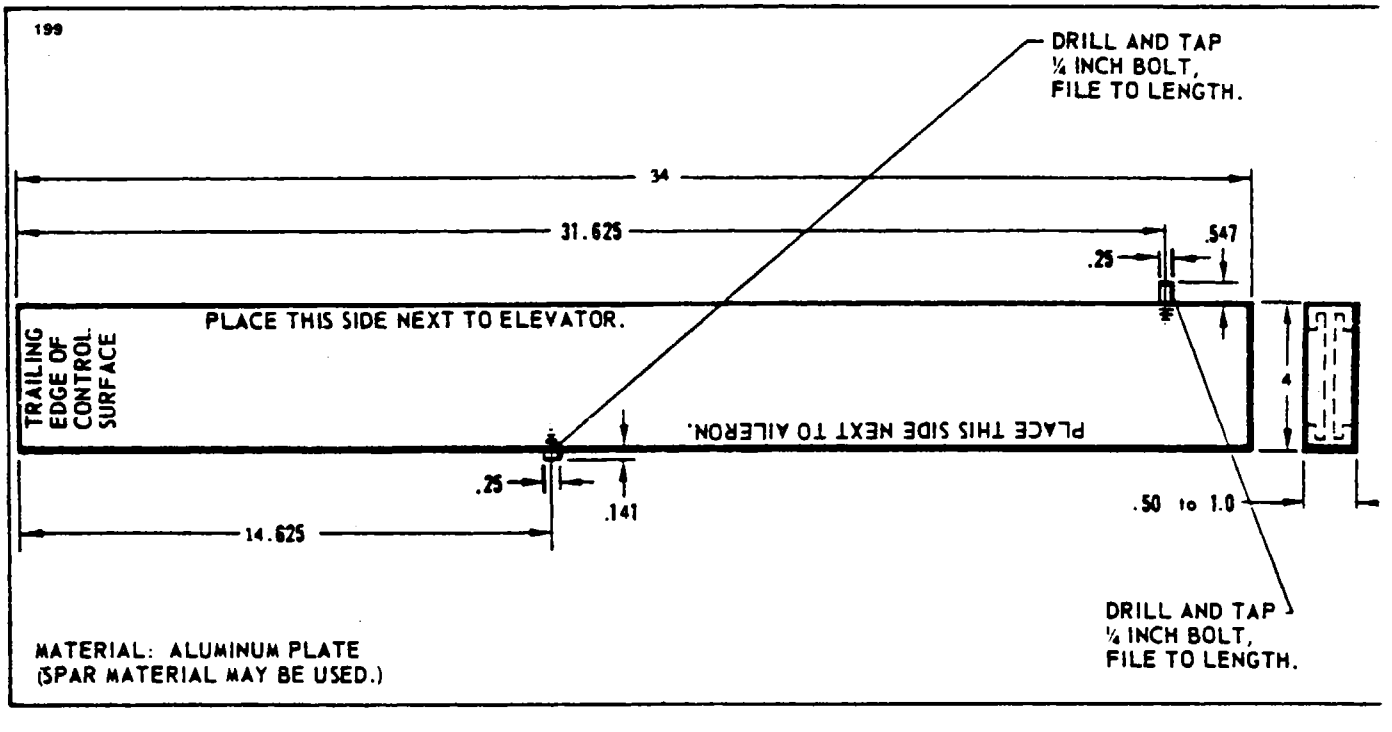

Figure 5-27. Fabricated Aileron-Elevator Rigging Tool

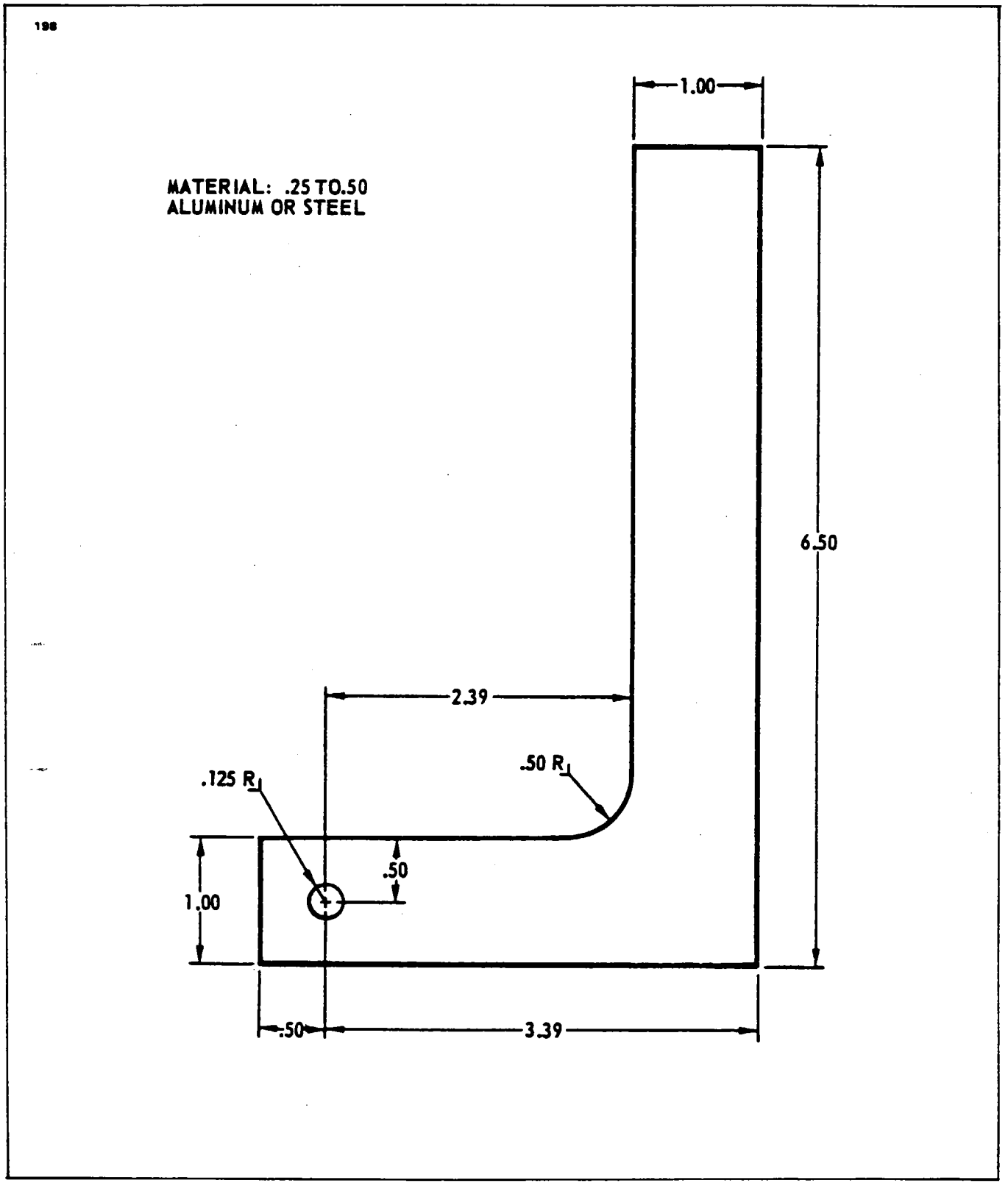

Figure 5-28. Fabricated Bellcrank Rigging Tool

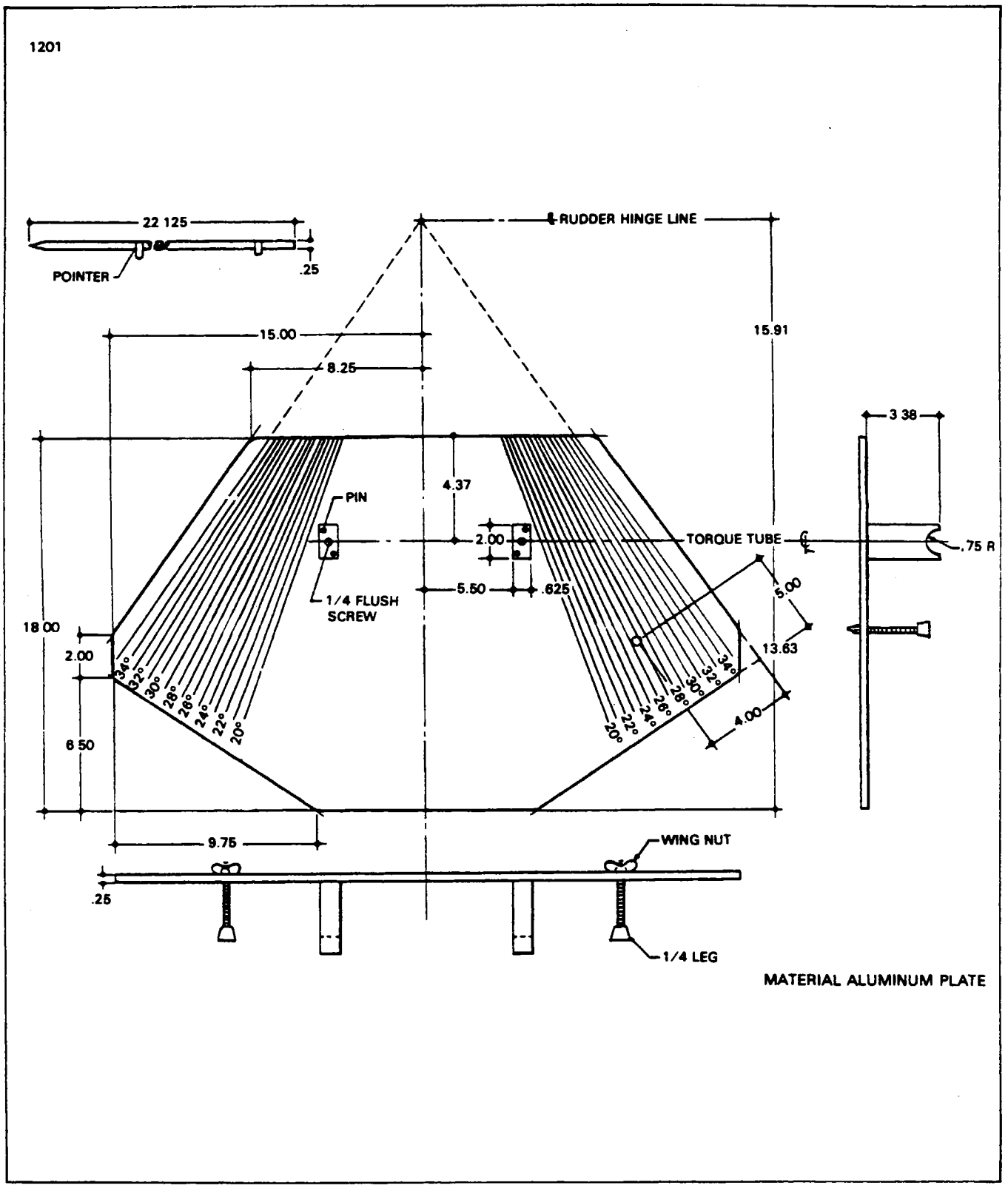

Figure 5-29. Fabricated Rudder Rigging Tool

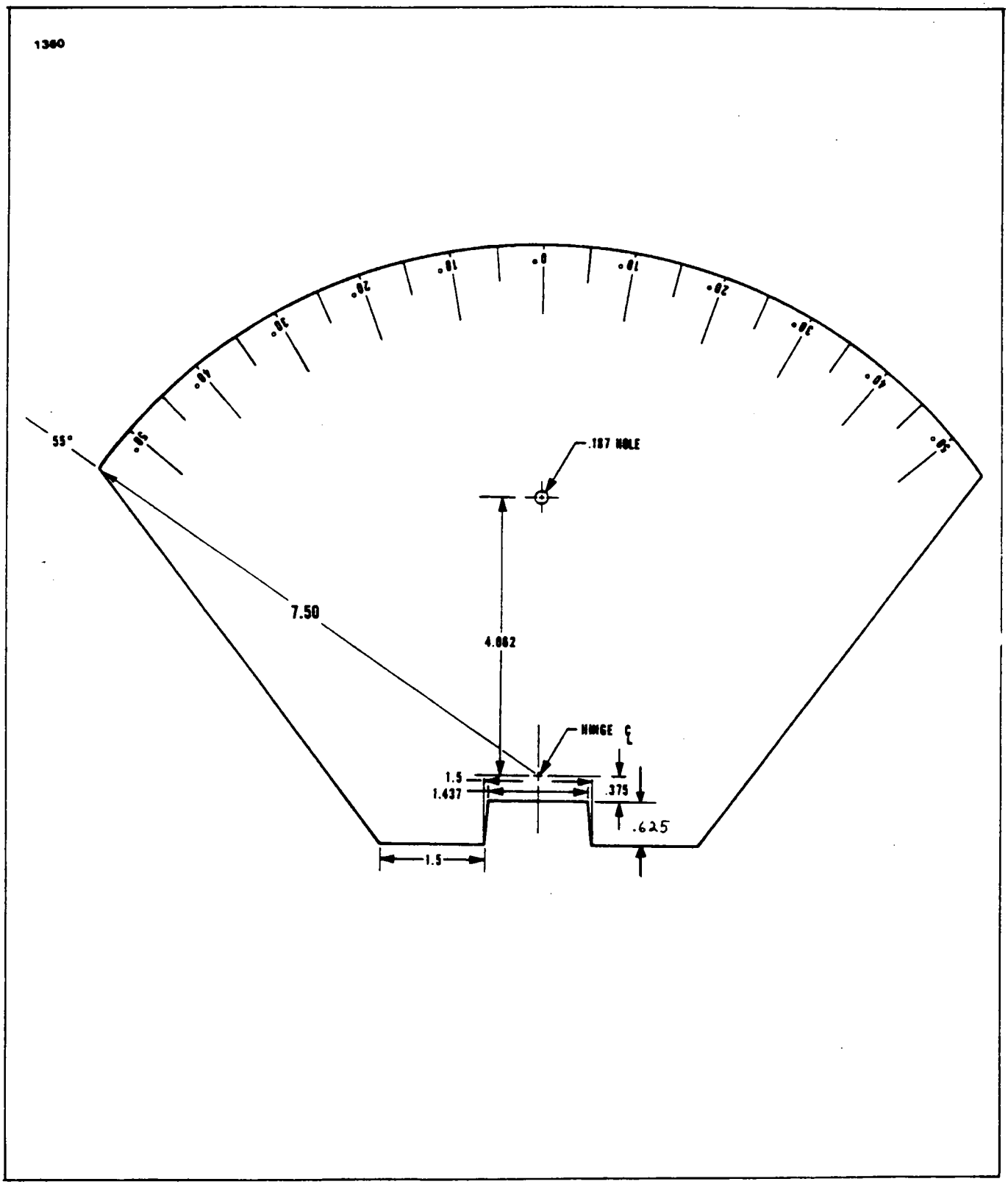

Figure 5-30. Fabricated Rudder Trim Tab Rigging Tool

THIS PAGE INTENTIONALLY LEFT BLANK

TABLE V-III. TROUBLESHOOTING CHART (SURFACE CONTROLS)

Trouble	Cause	Remedy
	AILERON CONTROL SYSTEM	
Lost motion between control wheel and aileron.	Cable tension too low.	Adjust cable tension. (Refer to Paragraph 5-11.)
	Linkage loose or worn.	Check linkage and tighten or replace.
	Broken pulley.	Replace pulley.
	Cables not in place on pulleys.	Install cables correctly. Check cable guards.
Resistance to control wheel rotation.	System not lubricated properly.	Lubricate system.
	Cable tension too high.	Adjust cable tension. (Refer to Paragraph 5-11.)
	Control column horizontal chain improperly adjusted.	Adjust chain tension. (Refer to Paragraph (5-7.)
	Pulleys binding or rubbing.	Replace binding pulleys and/or provide clearance between pulleys and brackets.
	Cables not in place on pulleys.	Install cables correctly. Check cable guards.
	Bent aileron and/or hinge.	Repair or replace aileron and/or hinge.
	Cables crossed or routed incorrectly.	Check routing of control cables.
Control wheels not synchronized.	Incorrect control column rigging.	Rig in accordance with Paragraph 5-7.

TABLE V-III. TROUBLESHOOTING CHART (SURFACE CONTROLS) (cont.)

Trouble	Cause	Remedy
AILERON CONTROL SYSTEM (cont.)		
Control wheels not horizontal when ailerons are neutral.	Incorrect rigging of aileron system.	Rig in accordance with Paragraph 5-ll.
Incorrect aileron travel.	Aileron control rods not adjusted properly. Aileron bellcrank stops not adjusted properly.	Adjust in accordance with Paragraph 5-11. Adjust in accordance with Paragraph 5-11.
Correct aileron travel cannot be obtained by adjusting bellcrank stops.	Incorrect rigging of aileron cables, control wheel and control rod.	Rig in accordance with Paragraph 5-11.
Control wheel stops before control surfaces reach full travel.	Incorrect rigging between control wheel and control cables.	Rig in accordance with Paragraph 5-11.
AILERON TRIM CONTROL SYSTEM		
Lost motion between trim control wheel and trim tab.	Cable tension too low. Cables not in place on pulleys. Broken pulley. Linkage loose or worn.	Adjust in accordance with Paragraph 5-19. Install cables according to Paragraphs 5-16, 5-18 and 5-19. Replace pulley. Check linkage and tighten or replace.
Trim control wheel moves with excessive resistance.	System not lubricated properly.	Lubricate system.

TABLE V-III. TROUBLESHOOTING CHART (SURFACE CONTROLS) (cont.)

Trouble	Cause	Remedy
AILERON TRIM CONTROL SYSTEM (cont.)		
Trim control wheel moves with excessive resistance. (cont.)	Cable tension too high.	Adjust in accordance with Paragraph 5-19.
	Pulleys binding or rubbing.	Replace binding pulleys. Provide clearance between pulleys and brackets.
	Cables not in place on pulleys.	Refer to Paragraphs 5-16, 5-18 and 5-19.
	Trim tab hinge binding.	Lubricate hinge. If necessary, replace.
	Cables crossed or routed incorrectly.	Check routing of control cables.
	Shaft binding at floorboard bushing.	Clean, align, lubricate or replace bushing.
Trim tab fails to reach full travel.	System incorrectly rigged.	Check and/or adjust rigging per Paragraph 5-19.
	Either or both trim drums incorrectly wrapped.	Check and/or adjust rigging per Paragraph 5-19.
Trim indicator fails to indicate correct trim position.	Trim indicator unit not adjusted properly.	Adjust in accordance with Paragraph 5-50.

TABLE V-III. TROUBLESHOOTING CHART (SURFACE CONTROLS) (cont.)

Trouble	Cause	Remedy
	ELEVATOR CONTROL SYSTEM	
Lost motion between control wheel and elevator.	Cable tension too low.	Adjust cable tension per Paragraph 5-23.
	Linkage loose or worn.	Check linkage and tighten or replace.
	Broken pulley.	Replace pulley.
	Cables not in place on pulleys.	Install cables correctly.
Resistance to elevator control movement.	System not lubricated properly.	Lubricate system.
	Cable tension too high.	Adjust cable tension per Paragraph 5-23.
	Binding control column.	Adjust and lubricate per Paragraph 5-7.
	Pulleys binding or rubbing.	Replace binding pulleys and/or provide clearance between pulleys and brackets.
	Cables not in place on pulleys.	Install cables correctly.
	Bent elevator or hinge.	Repair or replace elevator or hinge.
	Cables crossed or routed incorrectly.	Check routing of control cables.
Incorrect elevator travel.	Elevator arm stops incorrectly adjusted.	Adjust stop screws per Paragraph 5-23.
	Elevator control rod incorrectly adjusted.	Adjust control rod per Paragraph 5-25.

TABLE V-III. TROUBLESHOOTING CHART (SURFACE CONTROLS) (cont.)

Trouble	Cause	Remedy
ELEVATOR CONTROL SYSTEM (cont.)		
Correct elevator travel cannot be obtained by adjusting elevator arm stops.	Elevator cables incorrectly rigged.	Rig cables in accordance with Paragraph 5-23.
ELEVATOR TRIM CONTROL SYSTEM		
Lost motion between trim control wheel and trim tab.	Cable tension too low.	Adjust in accordance with Paragraph 5-31.
	Cables not in place on pulleys.	Install cables according to Paragraphs 5-28, 5-30 and 5-31.
	Broken pulley.	Replace pulley.
	Linkage loose or worn.	Check linkage and tighten or repalce.
Trim control wheel moves with excessive resistance.	System not lubricated properly.	Lubricate system.
	Cable tension too high.	Adjust in accordance with Paragraph 5-31.
	Pulleys binding or rubbing.	Replace binding pulleys. Provide clearance between pulleys and brackets.
	Cables not in place on pulleys.	Refer to Paragraphs 5-28, 5-30 and 5-31.
	Trim tab hinge binding.	Lubricate hinge. If necessary, replace.
	Cables crossed or routed incorrectly.	Check routing of control cables.
	Shaft binding at floorboard bushing.	Clean, align, lubricate or replace bushing.

TABLE V-III. TROUBLESHOOTING CHART (SURFACE CONTROLS) (cont.)

Trouble	Cause	Remedy
ELEVATOR TRIM CONTROL SYSTEM (cont.)		
Trim tab fails to reach full travel.	System incorrectly rigged.	Check and/or adjust rigging per Paragraph 5-23.
	Either or both trim drums incorrectly wrapped.	Check and/or adjust rigging per Paragraph 5-19.
Trim indicator fails to indicate correct trim position.	Trim indicator unit not adjusted properly.	Adjust in accordance Paragraph 5-49.
RUDDER CONTROL SYSTEM		
Lost motion between rudder pedals and rudder.	Cable tension too low.	Adjust cable tension per Paragraph 5-36.
	Linkage loose or worn.	Check linkage and tighten or replace.
	Broken pulley.	Replace pulley.
	Bolts attaching rudder to bellcrank are loose.	Tighten bellcrank bolts.
Excessive resistance to rudder pedal movement.	System not lubricated properly.	Lubricate system.
	Rudder pedal torque tube bearing in need of lubrication.	Lubricate torque tube bearings.
	Cable tension too high.	Adjust cable tension per Paragraph 5-36.

TABLE V-III. TROUBLESHOOTING CHART (SURFACE CONTROLS) (cont.)

Trouble	Cause	Remedy
RUDDER CONTROL SYSTEM (cont.)		
	Pulleys binding or rubbing.	Replace binding pulleys and/or provide clearance between pulleys and brackets.
	Cables not in place on pulleys.	Install cables correctly. Check cable guards.
	Cables crossed or routed incorrectly.	Check routing of control cables.
Rudder pedals not neutral when rudder is streamlined.	Rudder cables incorrectly rigged.	Rig in accordance with Paragraph 5-36.
Incorrect rudder travel.	Rudder bellcrank stop incorrectly adjusted.	Rig in accordance with Paragraph 5-36.
	Nose wheel contacts stops before rudder.	Rig in accordance with Paragraph 5-36.
RUDDER TRIM CONTROL SYSTEM		
Lost motion between trim control wheel and trim tab.	Cable tension too low.	Adjust in accordance with Paragraph 5-42.
	Cables not in place on pulleys.	Install cables according to Paragraphs 5-39, 5-41 and 5-42.
	Broken pulley.	Replace pulley.
	Linkage loose or worn.	Check linkage and tighten or replace.

TABLE V-III. TROUBLESHOOTING CHART (SURFACE CONTROLS) (cont.)

Trouble	Cause	Remedy
RUDDER TRIM CONTROL SYSTEM (cont.)		
Trim control wheel moves with excessive resistance.	System not lubricated properly.	Lubricate system.
	Pulleys binding or rubbing.	Replace binding pulleys. Provide clearance between pulleys and brackets.
	Cables not in place on pulleys.	Install cables according to Paragraphs 5-39, 5-41 and 5-42.
	Trim tab hinge binding.	Lubricate hinge. Replace if necessary.
	Cables crossed or routed incorrectly.	Check routing of control cables.
Trim tab fails to reach full travel.	System incorrectly rigged.	Check and/or adjust rigging per Paragraph 5-42.
	Either or both trim drums incorrectly wrapped.	Check and/or adjust rigging per Paragraph 5-42.
Trim indicator fails to indicate correct trim position.	Trim indicator unit not adjusted properly.	Adjust in accordance with Paragraph 5-50.

TABLE V-III. TROUBLESHOOTING CHART (SURFACE CONTROLS) (cont.)

Trouble	Cause	Remedy
	FLAP CONTROL SYSTEM	
Flaps fail to extend or retract though flap solenoid actuates. (Motor circuit.)	Battery switch off.	Turn switch on.
	Flap motor circuit breaker open.	Reset circuit breaker.
	Defective flap selector switch.	Replace selector switch.
	Defective flap motor circuit relay.	Replace relay.
	Ground open from flap motor circuit relay.	Check ground connection.
	Ground open from flap selector switch.	Check ground connection.
	Defective flap motor.	Replace motor.
	Defective circuit wiring.	Isolate cause and repair.
Flaps fail to extend or retract. Flap solenoid does not actuate. (Solenoid circuit.)	Battery switch off.	Turn switch on.
	Flap solenoid circuit breaker open.	Reset circuit breaker.
	Defective flap selector switch.	Replace selector switch.
	Defective up or down limit switch.	Replace defective switch.
	Defective flap solenoid.	Replace flap solenoid.
	Ground open from flap solenoid.	Check ground connection.
	Defective cirucit wiring.	Isolate cause and repair.

TABLE V-III. TROUBLESHOOTING CHART (SURFACE CONTROLS) (cont.)

Trouble	Cause	Remedy
FLAP CONTROL SYSTEM (cont.)		
Flaps fail to retract completely.	Up limit switch incorrectly adjusted.	Adjust flap in accordance with Paragraph 5-66.
Flaps do not extend completely.	Down limit switch incorrectly adjusted.	Adjust in accordance with Paragraph 5-66.
Flaps not synchronized or fail to fit evenly when retracted.	Incorrect adjustment of the transmission tube.	Rig in accordance with Paragraph 5-66.
Flaps have erratic operation during extension and retraction.	Binding between flexible shaft and motor.	Isolate cause and lubricate cable if required.
	Binding between track and rollers.	Refer to Rigging and Adjustment, Paragraph 5-66.
	Slipping or stripped transmission.	Replace transmission.
	Loose electrical connection.	Check and repair electrical connections.
	Transmission needs lubrication.	Lubricate transmission.
Flap on one side fails to operate.	Broken flexible actuator shaft.	Replace flexible shaft.
	Defective transmission.	Replace transmission.
	Faulty time delay switch.	Check operation in accordance with Paragraph 5-68.

TABLE V-III. TROUBLESHOOTING CHART (SURFACE CONTROLS) (cont.)

Trouble	Cause	Remedy
	FLAP CONTROL SYSTEM (cont.)	
No indication of flap position on indicator.	Battery switch off.	Turn switch on.
	Circuit breaker open.	Reset circuit breaker.
	Sender unit ground open.	Check ground connection.
	Defective indicator unit.	Replace indicator unit.
	Defective sender unit.	Replace sender unit.
	Sender unit not adjusted properly.	Adjust sender unit in accordance with Paragraph 5-67.
	Defective wiring.	Check and repair wiring.

THIS PAGE INTENTIONALLY BLANK

APPENDIX

CONTROL CABLE INSPECTION

Aircraft control cable systems are subject to a variety of environmental conditions and forms of deterioration that, with time, may be easy to recognize as wire/strand breakage or the not-so-readily visible types of wear, corrosion, and/or distortion. The following data may help in detecting the presence of these conditions:

CABLE DAMAGE

Critical areas for wire breakage are sections of the cable which pass through fairleads and around pulleys. To inspect each section which passes over a pulley or through a fairlead, remove cable from aircraft to the extent necessary to expose that particular section. Examine cables for broken wires by passing a cloth along length of cable. This will clean the cable for a visual inspection, and detect broken wires, if the cloth snags on cable. When snags are found, closely examine cable to determine full extent of damage.

The absence of snags is not positive evidence that broken wires do not exist. Figure 1A shows a cable with broken wires that were not detected by wiping, but were found during a visual inspection. The damage became readily apparent (Figure 1B) when the cable was removed and bent using the techniques depicted in Figure 1C.

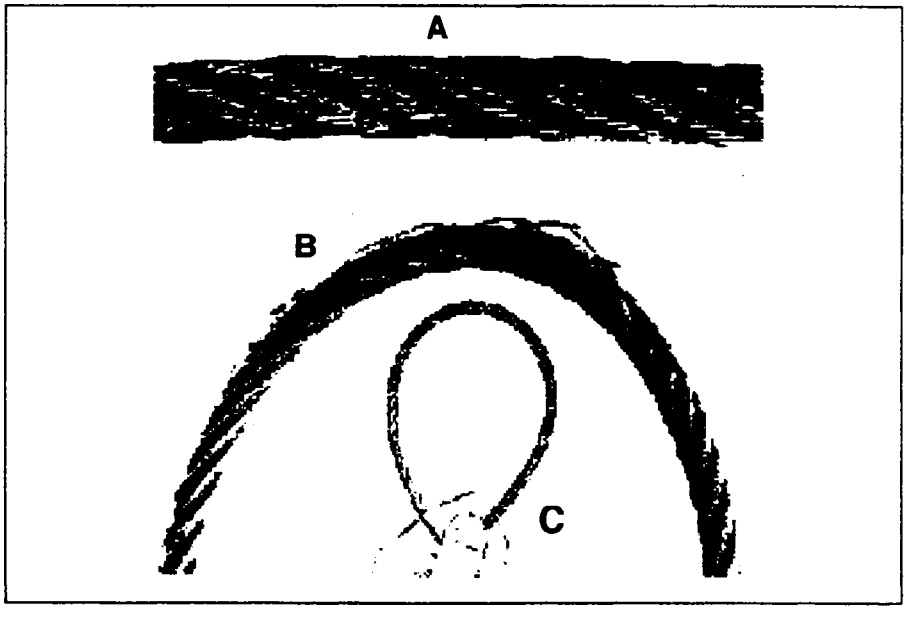

Figure 5-APP-1. Control Cable Inspection Technique

EXTERNAL WEAR PATTERNS

Wear will normally extend along cable equal to the distance cable moves at that location. Wear may occur on one side of the cable only or on its entire circumference. Replace flexible and non-flexible cables when individual wires in each strand appear to blend together (outer wires worn 40-50 percent) as depicted in Figure 2.

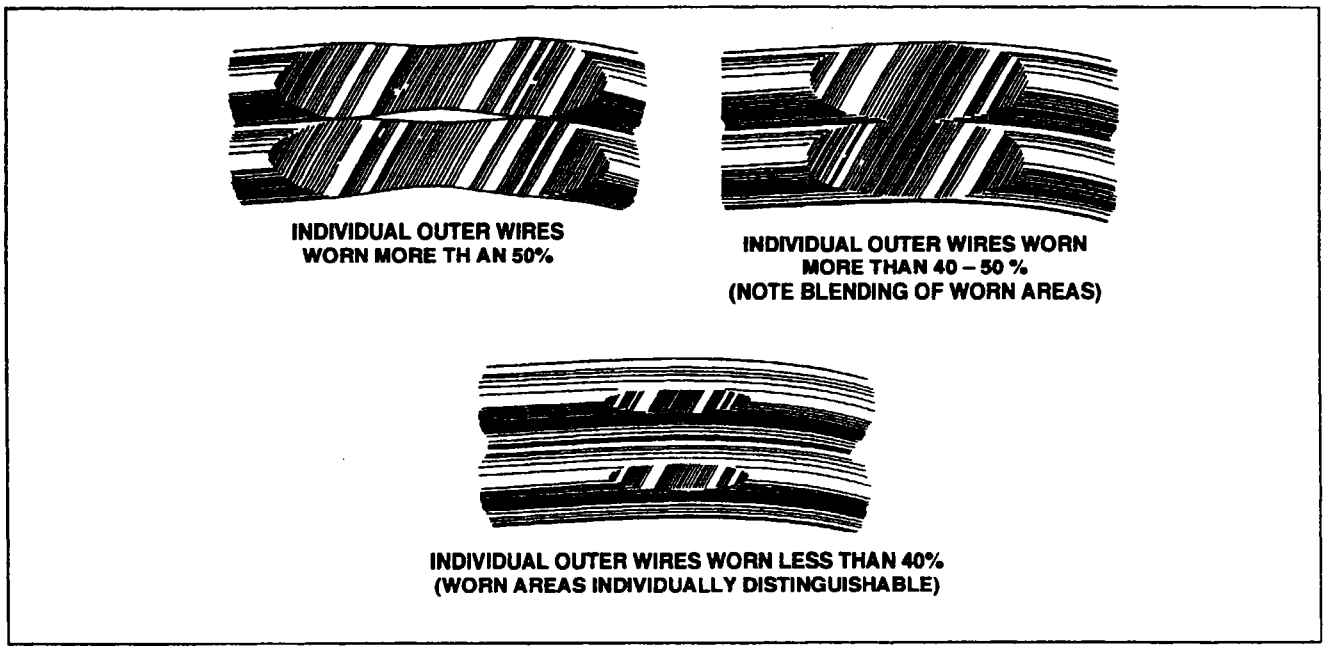

Figure 5-APP-2. Cable Wear Pattern

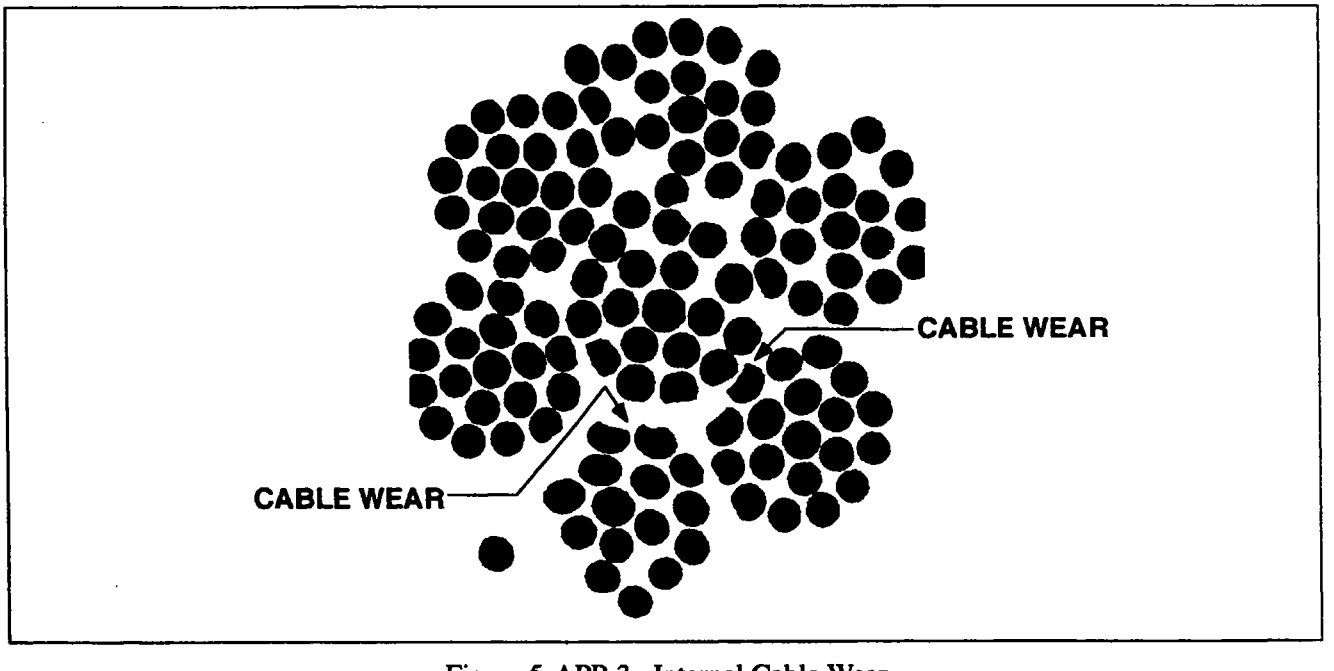

Figure 5-APP-3. Internal Cable Wear

INTERNAL CABLE WEAR

As wear is taking place on the exterior surface of a cable, the same condition is taking place internally, particularly in the sections of the cable which pass over pulleys and quadrants. This condition, shown in Figure 3, is not easily detected unless the strands of the cable are separated. Wear of this type is a result of the relative motion between inner wire surfaces. Under certain conditions the rate of this type wear can be greater than that occurring on the surface.

CORROSION

Carefully examine any cable for corrosion that has a broken wire in a section not in contact with wear producing airframe components such as pulleys, fairleads, etc. It may be necessary to remove and bend the cable to properly inspect it for internal strand corrosion as this condition is usually not evident on the outer surface of the cable. Replace cable segments if internal strand rust or corrosion is found.

Areas especially conducive to cable corrosion are battery compartments, lavatories, wheel wells, etc., where concentrations of corrosive fumes, vapors, and liquids can accumulate.

– Note –

Check all exposed sections of cable for corrosion after a cleaning and/or metal-brightening operation has been accomplished in that area.

CABLE MAINTENANCE

Frequent inspections and preservation measures such as rust prevention treatments for bare cable areas will help to extend cable service life. Where cables pass through fairleads, pressure seals, or over pulleys, remove accumulated heavy coatings of corrosion prevention compound. Provide corrosion protection for these cable sections by lubricating with a light coat of graphite grease or general purpose, low-temperature oil.

– CAUTION –

AVOID USE OF VAPOR DEGREASING, STEAM CLEANING, METHYLETHYLKETONE (MEK) OR OTHER SOLVENTS TO REMOVE CORROSION-PREVENTATIVE COMPOUNDS, AS THESE METHODS WILL ALSO REMOVE CABLE INTERNAL LUBRICANT.

CABLE FITTINGS

Check swaged terminal reference marks for an indication of cable slippage within fitting. Inspect fitting assembly for distortion and/or broken strands at the terminal. Assure that all bearings and swivel fittings (bolted or pinned) pivot freely to prevent binding and subsequent failure. Check turnbuckles for proper thread exposure and broken or missing safety wires/clips.

PULLEYS

Inspect pulleys for roughness, sharp edges, and presence of foreign material embedded in the grooves. Examine pulley bearings to assure proper lubrication, smooth rotation, freedom from flat spots, dirt, and paint spray. Periodically rotate pulleys, which turn through a small arc, to provide a new bearing surface for the cable. Maintain pulley alignment to prevent the cable from riding on flanges and chafing against guards, covers, or adjacent structure. Check all pulley brackets and guards for damage, alignment, and security.

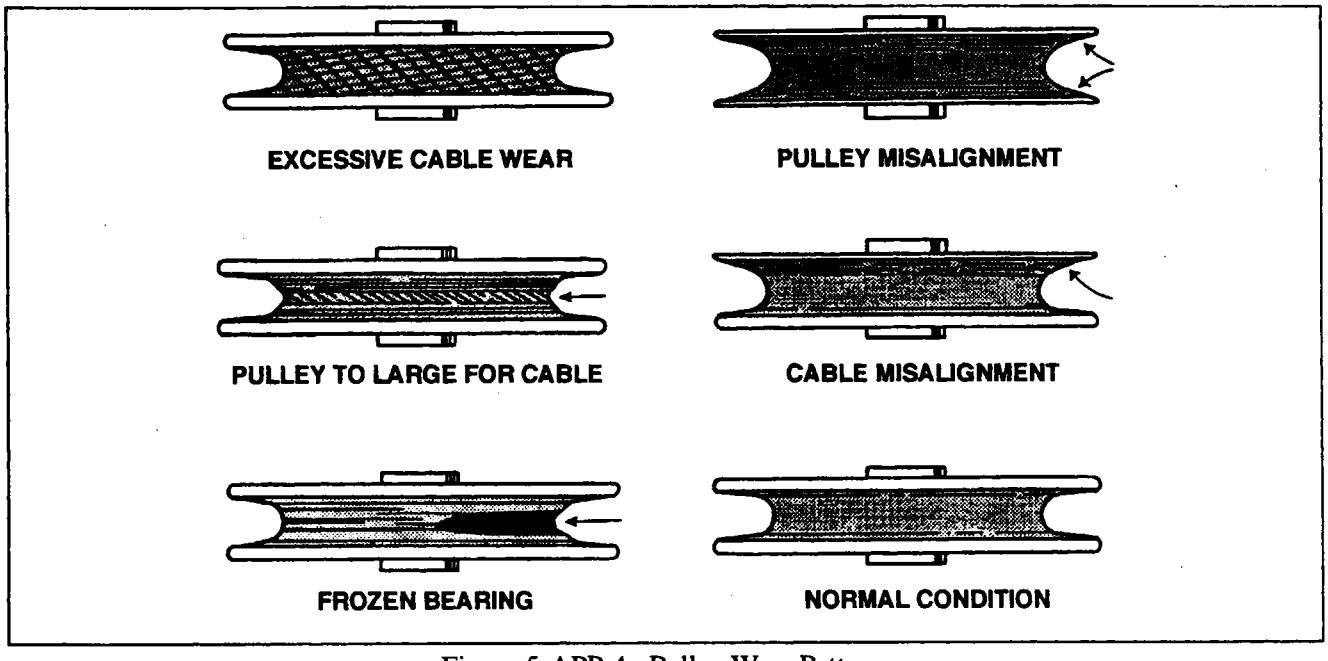

Figure 5-APP-4. Pulley Wear Patterns

PULLEY WEAR PATTERNS

Various cable system malfunctions may be detected by analyzing pulley conditions. These include such discrepancies as too much tension, misalignment, pulley bearing problems, and size mismatches between cables and pulleys. Examples of these conditions are shown in Figure 4.

THIS SPACE INTENTIONALLY BLANK

THIS PAGE INTENTIONALLY BLANK

THIS PAGE INTENTIONALLY BLANK

Cheyenne

AIRPLANE

SERVICE MANUAL

CARD 2 OF 8

PA-31T CHEYENNE

PA-31T CHEYENNE II

PA-31T1 CHEYENNE I

PA-31T1 CHEYENNE IA

PA-31T2 CHEYENNE II XL

PIPER AIRCRAFT CORPORATION

PART NUMBER 753 826

2A1

JULY 2, 1984
INTERIM REVISION: OCTOBER 15, 1997

SERIAL NUMBER INFORMATION

PA-31T, CHEYENNE

Serial Numbers 31T-7400002 to 31T-7720069 inclusive.

PA-31T, CHEYENNE II

Serial Numbers 31T-7820001 to 31T-8120104 inclusive.

PA-31T1, CHEYENNE I

Serial Numbers 31T-7804001 to 31T-8104101 inclusive.

PA-31T1, CHEYENNE IA

Serial Numbers 31T-8304001 to 31T-8304003 inclusive;
(then, serial number series changed to)
Serial Numbers 31T-1104004 to 1104017 inclusive.

PA-31T2, CHEYENNE II XL

Serial Numbers 31T-8166001 to 31T-8166076 inclusive;
(then, serial number series changed to)
Serial Numbers 31T-1166001 to 1166008 inclusive.

AEROFICHE EXPLANATION AND REVISION STATUS

Service manual information incorporated in this set of Aerofiche cards has been arranged in accordance with general specifications of Aerofiche adopted by General Aviation Manufacturer's Association, (GAMA).

Information compiled in this Aerofiche Service Manual will be kept current by revisions distributed periodically. These revisions supersede all previous revisions and are complete Aerofiche card replacements and supersede Aerofiche cards of same number in set.

Conversion of Aerofiche alpha/numeric code numbers:
First number is Aerofiche card number.
Letter is horizontal line reference per card.
Second number is vertical line reference per card.
Example: 2J16 Aerofiche card number two of given set, Grid location J16.

To aid in locating the various chapters and related service information desired, the following is provided:

1. At the beginning of Aerofiche Card No. 1:
   a. A complete Section Index for all fiche in this set.
   b. A complete list of Illustrations for all fiche in this set.
   c. A complete list of Tables for all fiche in this set.
   d. A complete list of Charts for all fiche in this set.
2. At the beginning of each subsequent Aerofiche Card:
   a. A complete Section Index for all fiche in this set.
   b. A complete list of Illustrations for that fiche only.
   c. A complete list of Tables for that fiche only.
   d. A complete list of Charts for that fiche only.
3. A complete Table of Contents showing paragraph titles and appropriate grid location numbers is given at the beginning of each Section relating to the information within that Section.
4. Identification of revised material:
   Revised text and illustrations are indicated by a black vertical line along the left-hand margin of the frame, opposite revised, added or deleted material. Revision lines indicate only current revisions with changes and additions to or deletions of existing text and illustrations. Changes in capitalization, spelling, punctuation, indexing, physical location of material, or complete page additions are not identified by revision lines.

AEROFICHE EXPLANATION AND REVISION STATUS (cont)

5. Revisions to Service Manual 753 826 issued December 1973 are as follows:

Revision	Publication Date	Aerofiche Card Effectivity
ORG731208	December 8, 1973	
CR810206	February 6, 1981	1, 2, 3, 4, 5, 6, 7 and 8
PR810923	September 23, 1981	1, 2, 3, 4, 5, 6, 7 and 8
PR810925	September 25, 1981	1 Only
PR820215	February 15, 1982	1, 2, 3, 4, 5, 6, 7 and 8
PR821015	October 15, 1982	1, 2, 3, 4, 5, 6, 7 and 8
PR830425	April 25, 1983	1, 2, 3, 4, 5, 6, 7 and 8
PR840105	January 5, 1984	1, 2, 3, 4, 5, 6, 7 and 8
PR840323	March 23, 1984	1, 2, 3, 4, 5, 6, 7 and 8
PR840702	July 2, 1984	1, 2, 3, 4, 5, 6, 7 and 8
IR860220	February 20, 1986	3
IR860430	April 30, 1986	3
IR860821	August 21, 1986	1
IR871009	June 15, 1988	2
IR900313	March 13, 1990	1
IR941019	October 19, 1994	1 and 2
IR950320	March 20, 1995	1
IR971015 *	October 15, 1997	1, 2, 3, 4, 5, 6, 7 and 8

*** INTERIM REVISION TO SERVICE MANUAL 753-826**

Revisions appear in all eight Aerofiche cards. Discard your entire existing Aerofiche card set (Cards 1 - 8) and replace it with the revised Aerofiche card set (Cards 1 - 8) dated 10/15/97.

Consult the Customer Service Information Catalog Aerofiche (P/N 1753-755) for current revision dates for this manual.

SECTION INDEX

SECTION	AEROFICHE CARD NO. 1	GRID NO.
I	INTRODUCTION	1A19
II	HANDLING AND SERVICING	1A22
III	INSPECTION	1D23
IV	STRUCTURES	1E13
V	SURFACE CONTROLS	1I8
	AEROFICHE CARD NO. 2	
VI	HYDRAULIC SYSTEM	2A10
VII	LANDING GEAR AND BRAKE SYSTEM	2D19
VIII	POWER PLANT (PA-31T AND PA-31T1)	2I11
	AEROFICHE CARD NO. 3	
VIIIA	POWER PLANT (PA-31T2)	3A8
IX	FUEL SYSTEM	3D7
X	INSTRUMENTS	3F2
	AEROFICHE CARD NO. 4	
XI	ELECTRICAL SYSTEM	4A7
	AEROFICHE CARD NO. 5	
XII	ELECTRONICS	5A9
XIII	ENVIRONMENTAL CONTROL SYSTEM (PA-31T AND PA-31T1)	5B1
	AEROFICHE CARD NO. 6	
XIIIA	ENVIRONMENTAL CONTROL SYSTEM (PA-31T2)	6A8
XIV	ACCESSORIES AND UTILITIES	6C1
	AEROFICHE CARD NO. 7	
XV	ELECTRICAL SCHEMATICS (PA-31T AND PA-31T1)	7A5
	AEROFICHE CARD NO. 8	
XVA	ELECTRICAL SCHEMATICS (PA-31T2)	8A5

LIST OF ILLUSTRATIONS

Figure		Aerofiche Grid No.
6-1.	Schematic Diagram of Hydraulic System With Gear Door Actuators	2A16
6-1a.	Schematic Diagram of Hydraulic System Without Gear Door Actuators	2A17
6-2.	Schematic of Power Pack Electrical System	2A18
6-3.	Power Pack Installation	2B2
6-4.	Location of Power Pack Components (Ozone)	2B3
6-5.	Hydraulic Power Pack (Ozone)	2B5
6-6.	Power Pack Manifold (Ozone)	2B9
6-7.	Power Pack Handle-Release (Ozone)	2B13
6-8.	Safetying Control Arms (Ozone)	2B13
6-9.	Timing of Selector Spool (Ozone)	2B15
6-10.	Handle-Release Adjustment (Ozone)	2B16
6-11.	Location of Power Pack Components (Wiebel Tool)	2B20
6-12.	Hydraulic Power Pack (Wiebel Tool)	2B21
6-13.	Power Pack Manifold (Wiebel Tool)	2B24
6-14.	Power Pack Handle-Release Mechanism (Wiebel Tool)	2C2
6-15.	Safetying Control Arm (Wiebel Tool)	2C5
6-16.	Indexing of Selector Spool (Wiebel Tool)	2C6
6-17.	Handle-Release Adjustment (Wiebel Tool)	2C8
6-18.	Hydraulic System Schematic	2C10
6-19.	Hand Pump (Ozone)	2C13
6-20.	Hand Pump (Wiebel Tool)	2C16
6-21.	Nose Gear Actuating Cylinder (Ozone OAS 2923-3)	2C18
6-22.	Nose Gear or Main Actuating Cylinder (Wiebel Tool WTC 2115-1, WTC 2235-1 and WTC 2236-1)	2C20
6-23.	Main Gear Actuating Cylinder (Ozone OAS 5107-1)	2C23
6-24.	Main Gear Actuating Cylinder (Wiebel Tool WTC 2145-1 and WTC 2145-3)	2D1
6-25.	Gear Door Actuating Cylinder (Ozone OAS 2924-3)	2D2
6-26.	Gear Door Actuating Cylinder (Wiebel Tool, WTC 2114-1)	2D5
6-26a.	Gear Door Actuating Cylinder (Wiebel Tool, WTC 2218-1)	2D8
6-27.	Hydraulic Filter	2D10
6-28.	Hydraulic Pump	2D11
6-29.	Power Pack Test Harness Schematic	2D15
7-1.	Nose Gear Oleo Strut Assembly	2E1
7-1a.	Installation of T-Rings	2E4
7-2.	Nose Landing Gear Installation	2E6
7-3.	Clamping Rudder Pedals in Neutral Position	2E14
7-4.	Rudder Pedals Neutral Angle	2E14
7-5.	Aligning Nose Gear	2E16
7-6.	Nose Gear Steering Installation	2E19
7-7.	Main Gear Oleo Strut Assembly	2E22
7-8.	Main Landing Gear Installation	2E24
7-8a.	Aligning Main Gear	2F7
7-9.	Inboard Main Gear Door Hinge	2F9
7-9a.	Test Equipment Installation, Emergency Gear Extension System	2F12

LIST OF ILLUSTRATIONS (cont.)

Figure		Aerofiche Grid No.
7-9b.	Fabricated Test Fitting, Emergency Gear Extension System	2F13
7-9c.	Landing Gear Actuating System (PA-31T2)	2F14
7-10.	Adjusting Main Gear Down Limit Switch	2F17
7-11.	Gear Warning Switches Installation	2F20
7-12.	Nose Wheel Assembly (B.F. Goodrich 3-1331)	2F22
7-13.	Nose Wheel Assembly (B.F. Goodrich 3-1076)	2F24
7-14.	Main Wheel Assembly (Goodyear 9544171-1)	2G2
7-15.	Main Wheel Assembly (Cleveland 40-106 and 40-106A)	2G7
7-16.	B.F. Goodrich Main Wheel Installation (3-1392 and 3-1424)	2G9
7-17.	B.F. Goodrich Wheel Repair Limits (3-1392 and 3-1424)	2G12
7-18.	Wheel Brake Assembly (Goodyear 5002376)	2G17
7-19.	Rivet Head Grinding Limits (Goodyear 5002376)	2G19
7-20.	Fabricated Rivet Tools (Goodyear 5002376)	2G20
7-21.	Snow Shield Modification (Goodyear 5002376)	2G21
7-22.	Wear Pad-Wear Limits (Goodyear 5002376)	2G22
7-23.	Limits for Repadded Pressure and Back Plates (Goodyear 5002376)	2G22
7-24.	Brake Disc Visual Check for Serviceable Limits (Goodyear 5002376)	2G24
7-25.	Removal and Installation of Anchor Bolts	2H6
7-26.	Wheel Brake Assembly (Cleveland 30-106)	2H8
7-27.	B.F. Goodrich 2-1435-2 Brake Installation	2H10
7-27a.	Brake Removal Wear Limit	2H11
7-27b.	Brake Removal Wear Limit	2H11
7-28.	Brake Master Cylinder Assembly	2H20
7-29.	Parking Brake Valve Assembly	2H20
7-30.	Fabricated Tool, Nose Gear Gauge Link Travel	2H21
7-31.	Fabricated Tool, Main Gear Side Brace Link Travel	2H22
7-32.	Fabricated Tool, Main Gear Toe-in Adjustment	2H23
7-33.	Nose Gear Wear Limits	2I4
7-34.	Main Gear Wear Limits	2I7
8-1.	Engine Cowling	2I16
8-2.	Engine Air Inlet Ice Protection System	2I20
8-2a.	Air Inlet Ice Protection System (S/N 31T-8304001 and up)	2I21
8-2b.	Special Equipment for Rigging Inertial Separator Doors (S/N 31T-8304001 and up)	2I22
8-3.	Oil Cooler Door Installation	2I23
8-4.	Propeller Installation	2J2
8-5.	Typical Nicks and Removal Method	2J3
8-6.	Engine Installation (Typical)	2J9
8-7.	Throttle Control Cable Handling Procedure	2J13
8-8.	Engine Controls	2J15
8-9.	Low Pitch Stop Switch Adjustment	2J22
8-10.	Minor Torque Adjustment	2K3
8-11.	Running Adjustment Settings	2K6

LIST OF ILLUSTRATIONS (cont.)

Figure		Aerofiche Grid No.
8-11a.	Fuel Nozzle Adapter Inspection	2K24
8-12.	Fuel Manifold Test Rig	2L2
8-13.	Oil Filter Element	2L6
8-14.	Torque System Calibration	2L9
8-15.	Cheyenne IA Torquemeter Test Setup	2L12
8-16.	Cheyenne IA Torquemeter Transducer Test Setup	2L13
8-17.	T5 Thermocouple Harness Loop Resistance Check	2L15
8-18.	T5 Harness Insulation Resistance Check	2L15
8-19.	Inter-Turbine Temperature Calibration Check	2L16

LIST OF TABLES

Table		Aerofiche Grid No.
VI-I.	Leading Particulars, Hydraulic Power Pack (Ozone)	2A20
VI-II.	Leading Particulars, Hydraulic Power Pack (Wiebel Tool)	2A21
VI-III.	Inspection and Repair, Hydraulic Pump	2D12
VI-IV.	Troubleshooting, Hydraulic System	2D16
VII-I.	Inspection Limits (Goodyear 9544171-4)	2G5
VII-II.	Inspection Limits (Goodyear 5002376)	2H1
VII-III.	Brake Wear Limits (B.F. Goodrich, 2-1435-2)	2H15
VII-IV.	Troubleshooting Chart (Brakes) (B.F. Goodrich 2-1435-2)	2H17
VII-V.	Troubleshooting Chart (Landing Gear System)	2H24
VIII-I.	Propeller Specifications	2J4
VIII-II.	List of Vendor Publications	2J4
VIII-III.	Troubleshooting Chart (Fuel Scavenger System)	2L1
VIII-IV.	Torque System Calibration Data	2L9
VIII-V.	Cheyenne IA Torquemeter Calibration Data	2L12
VIII-VI.	Cheyenne IA Torquemeter Transducer Pressure Test Specifications	2L13
VIII-VII.	Troubleshooting Chart (Engine)	2L18

LIST OF CHARTS

Chart		Aerofiche Grid No.
8-1.	Ground Adjustment Check Sheet (PA-31T)	2K11
8-2.	Ground Adjustment Check Sheet (PA-31T1)	2K12
8-3.	2000 RPM Torque Curve	2K13
8-4.	Fuel Flow (PA-31T)	2K14
8-5.	Gas Generator Speed/Data Plate Speed (PA-31T)	2K15
8-6.	Inter-Turbine Temperature (PA-31T)	2K16
8-7.	Torque (PA-31T)	2K17
8-8.	Data Plate Speed Ratio Curve (PA-31T)	2K 18
8-9.	Fuel Flow (PA-31T1)	2K19
8-10.	Gas Generator Speed	2K19
8-11.	Inter-Turbine Temperature (PA-31T1)	2K20
8-12.	Torque (PA-31T1)	2K20

SECTION VI

HYDRAULIC SYSTEM

Paragraph		Aerofiche Grid No.
6-1.	Introduction	2A14
6-2.	Description and Principle of Operation	2A14
6-3.	Troubleshooting	2A15
6-4.	Flushing Hydraulic System	2A19
6-5.	Hydraulic System Operational Checks	2A19
6-6.	Hydraulic Test Unit (Piper No. 753 080)	2A19
6-7.	Introduction (Piper Test Unit)	2A19
6-8.	Connecting Test Unit	2A19
6-9.	Cycling Landing Gear	2A22
6-10.	Checking Time Delay Valve	2A22
6-11.	Checking Handle Release to Neutral	2A23
6-12.	Checking Priority Valve	2A23
6-13.	Checking Main Relief Valve	2A24
6-14.	Checking Hand Pump Relief Valve	2A24
6-15.	Checking for Suction Air Leakage	2A24
6-16.	Checking Landing Gear Cycle Time	2B1
6-17.	Disconnecting Test Unit	2B1
6-18.	Hydraulic Test Unit (Optional)	2B1
6-19.	Hydraulic Power Pack (Ozone)	2B4
6-20.	Removal of Power Pack	2B4
6-21.	Disassembly of Power Pack	2B4
6-22.	Disassembly of Manifold	2B7
6-23.	Disassembly of Hand Pump Suction Screen	2B8
6-24.	Disassembly of Hand Pump Relief Valve	2B8
6-25.	Disassembly of Main Relief Valve	2B8
6-26.	Disassembly of Priority Valve	2B8
6-27.	Disassembly of Hand Pump Check Valve	2B8
6-28.	Disassembly of Standpipe and Filter	2B8
6-29.	Disassembly of Door Vent Valve	2B10
6-30.	Disassembly of Landing Gear Handle and Handle-Release Mechanism	2B10

Revised: 4/25/83

Paragraph		Aerofiche Grid No.

6-31.	Cleaning, Inspection and Repair of Power Pack	2B10
6-32.	Assembly of Power Pack	2B10
6-33.	Assembly of Door Vent Valve	2B10
6-34.	Assembly of Standpipe and Filter	2B11
6-35.	Assembly of Hand Pump Check Valve	2B11
6-36.	Assembly of Priority Valve	2B11
6-37.	Assembly of Main Relief Valve	2B11
6-38.	Assembly of Hand Pump Relief Valve	2B11
6-39.	Assembly of Hand Pump Suction Screen	2B12
6-40.	Assembly of Manifold	2B12
6-41.	Assembly of Power Pack Handle-Release Mechanism	2B14
6-42.	Installation of Manifold	2B14
6-43.	Installation and Adjustment of Inboard Gear Doors Solenoid Valve Switch	2B15
6-44.	Power Pack Bench Test Adjustment	2B16
6-45.	Adjustment of Handle-Release Mechanism	2B17
6-46.	Adjustment of Hand Pump Relief Valve	2B17
6-47.	Adjustment of Main Relief Valve	2B17
6-48.	Adjustment of Priority Valve	2B18
6-49.	Adjustment of Door Solenoid Valve	2B18
6-50.	Testing of Door Vent Valve	2B18
6-51.	Assembly of Power Pack	2B18
6-52.	Testing Reservoir for Leakage	2B18
6-53.	Hydraulic Power Pack (Wiebel Tool)	2B19
6-54.	Removal of Power Pack	2B19
6-55.	Disassembly of Power Pack	2B19
6-56.	Disassembly of Manifold	2B23
6-57.	Disassembly of Hand Pump Suction Screen	2B23
6-58.	Disassembly of Hand Pump Relief Valve	2B23
6-59.	Disassembly of Main Relief Valve	2C1
6-60.	Disassembly of Priority Valve	2C1
6-61.	Disassembly of Hand Pump Check Valve	2C1
6-62.	Disassembly of Standpipe - Filter	2C1
6-63.	Disassembly of Vent Filter	2C1
6-64.	Disassembly of Door Vent Valve	2C1
6-65.	Disassembly of Time Delay Check Valve	2C1
6-66.	Disassembly of Landing Gear Spring Cartridge Assembly	2C1
6-67.	Disassembly of Landing Gear Handle Release Mechanism	2C2
6-68.	Cleaning, Inspection and Repair of Power Pack	2C2
6-69.	Assembly of Power Pack	2C2
6-70.	Assembly of Time Delay Check Valve	2C3
6-71.	Assembly of Door Vent Valve	2C3
6-72.	Assembly of Vent Filter	2C3
6-73.	Assembly of Standpipe-Filter	2C3
6-74.	Assembly of Hand Pump Check Valve	2C3
6-75.	Assembly of Priority Valve	2C3
6-76.	Assembly of Main Relief Valve	2C3
6-77.	Assembly of Hand Pump Relief Valve	2C4

Paragraph		Aerofiche Grid No.

6-78.	Assembly of Hand Pump Suction Screen	2C4
6-79.	Assembly of Reservoir	2C4
6-80.	Assembly of Manifold	2C4
6-81.	Assembly of Power Pack Handle Release Mechanism	2C5
6-82.	Installation of Manifold	2C6
6-83.	Installation and Adjustment of Inboard Gear Doors Switch	2C7
6-84.	Power Pack Bench Test Adjustment	2C7
6-85.	Adjustment of Handle-Release Mechanism	2C7
6-86.	Adjustment of Hand Pump Relief Valve	2C8
6-87.	Adjustment of Main Relief Valve	2C8
6-88.	Adjustment of Priority Valve	2C9
6-89.	Adjustment of Door Solenoid Valve	2C9
6-90.	Adjustment of Door Vent Valve	2C9
6-91.	Assembly of Power Pack	2C9
6-92.	Testing Reservoir for Leakage	2C9
6-93.	Installation of Power Pack	2C11
6-94.	Landing Gear Selector Handle Mechanism	2C11
6-95.	Operation of Gear Selector Handle Mechanism	2C11
6-96.	Inspection of Landing Gear Selector Handle	2C11
6-97.	Adjustment of Landing Gear Selector Handle	2C11
6-98.	Filling Hydraulic Reservoir	2C12
6-99.	Bleeding the Hydraulic System	2C12
6-100.	Hand Pump (Emergency) (Ozone)	2C12
6-101.	Removal of Hand Pump	2C12
6-102.	Disassembly of Hand Pump	2C12
6-103.	Cleaning, Inspection and Repair of Hand Pump	2C14
6-104.	Assembly of Hand Pump	2C14
6-105.	Installation of Hand Pump	2C14
6-106.	Bleeding Hand Pump	2C14
6-107.	Hand Pump Test	2C14
6-108.	Hand Pump (Emergency) (Wiebel Tool)	2C15
6-109.	Removal of Hand Pump	2C15
6-110.	Disassembly of Hand Pump	2C15
6-111.	Cleaning, Inspection and Repair of Hand Pump	2C15
6-112.	Assembly of Hand Pump	2C15
6-113.	Installation of Hand Pump	2C17
6-114.	Bleeding Hand Pump	2C17
6-115.	Hand Pump Test	2C17
6-116.	Nose Gear Actuating Cylinder (Ozone)	2C19
6-117.	Removal of Nose Gear Actuating Cylinder	2C19
6-118.	Disassembly of Nose Gear Actuating Cylinder	2C19
6-119.	Cleaning, Inspection and Repair of Nose Gear Actuating Cylinder	2C19
6-120.	Assembly of Nose Gear Actuating Cylinder	2C19
6-121.	Installation of Nose Gear Actuating Cylinder	2C19

Paragraph		Aerofiche Grid No.
6-122.	Nose or Main Gear Actuating Cylinder (Wiebel Tool WTC 2115-1, WTC 2235 and WTC 2236-1)	2C21
6-123.	Removal of Nose or Main Gear Actuating Cylinder	2C21
6-124.	Disassembly of Nose or Main Gear Actuating Cylinder	2C21
6-125.	Cleaning, Inspection and Repair of Nose or Main Gear Actuating Cylinder	2C21
6-126.	Assembly of Nose or Main Gear Actuating Cylinder	2C21
6-127.	Installation of Nose or Main Gear Actuating Cylinder	2C21
6-128.	Main Gear Actuating Cylinders (Ozone)	2C22
6-129.	Removal of Main Gear Actuating Cylinders	2C22
6-130.	Disassembly of Main Gear Actuating Cylinders	2C22
6-131.	Cleaning, Inspection and Repair of Main Gear Actuating Cylinders	2C22
6-132.	Assembly of Main Gear Actuating Cylinders	2C22
6-133.	Installation of Main Gear Actuating Cylinders	2C22
6-134.	Main Gear Actuating Cylinders (Wiebel Tool WTC 2145-1 and WTC 2145-3)	2C24
6-135.	Removal of Main Gear Actuating Cylinders	2C24
6-136.	Disassembly of Main Gear Actuating Cylinders	2C24
6-137.	Cleaning, Inspection and Repair of Main Gear Actuating Cylinders	2C24
6-138.	Assembly of Main Gear Actuating Cylinders	2C24
6-139.	Installation of Main Gear Actuating Cylinders	2C24
6-140.	Gear Door Actuating Cylinders (Ozone)	2C24
6-141.	Removal of Gear Door Actuating Cylinders (OAS2924-3)	2C24
6-142.	Disassembly of Gear Door Actuating Cylinders (OAS2924-3)	2C24
6-143.	Cleaning, Inspection and Repair of Gear Door Actuating Cylinders (OAS2924-3)	2D3
6-144.	Assembly of Gear Door Actuating Cylinder (OAS2924-3)	2D3
6-145.	Installation of Gear Door Actuating Cylinder (OAS2924-3)	2D3
6-146.	Gear Door Actuating Cylinders (Wiebel Tool)	2D4
6-147.	Removal of Gear Door Actuating Cylinders (WTC 2114-1)	2D4
6-148.	Disassembly of Gear Door Actuating Cylinders (WTC 2114-1)	2D4
6-149.	Cleaning, Inspection and Repair of Gear Door Actuating Cylinders	2D4
6-150.	Assembly of Gear Door Actuating Cylinder (WTC 2114-1)	2D4
6-151.	Installation of Gear Door Actuating Cylinder (WTC 2114-1)	2D6
6-151a.	Removal of Gear Door Actuating Cylinders (WTC 2218-1)	2D6
6-151b.	Disassembly of Gear Door Actuating Cylinders (WTC 2218-1)	2D6
6-151c.	Cleaning, Inspection and Repair of Gear Door Actuating Cylinders (WTC 2218-1)	2D6
6-151d.	Assembly of Gear Door Actuating Cylinders (WTC 2218-1)	2D6
6-151e.	Installation of Gear Door Actuating Cylinders (WTC 2218-1)	2D7
6-152.	Hydraulic Lines	2D7
6-153.	Removal and Installation of Hydraulic Lines	2D7
6-154.	Hydraulic Filter	2D7
6-155.	Removal and Installation of Hydraulic Filter	2D7
6-156.	Replacement of Filter Element	2D9
6-157.	Hydraulic Pump	2D9
6-158.	Hydraulic Pump Operational Check	2D9
6-159.	Procedure After Engine Driven Hydraulic Pump Failure	2D9
6-160.	Removal of Hydraulic Pump	2D9
6-161.	Disassembly of Hydraulic Pump	2D10
6-162.	Cleaning, Inspection, Repair of Hydraulic Pump	2D13
6-163.	Assembly of Hydraulic Pump	2D13
6-164.	Installation of Hydraulic Pump	2D14
6-165.	Priming Hydraulic Pump	2D14
6-166.	Hydraulic System Failure	2D14
6-167.	High Altitude Gear Operation	2D15

SECTION VI

HYDRAULIC SYSTEM

6-1. INTRODUCTION. The hydraulic system components covered in this section consist of Power Pack, hand pump, actuating cylinders, hydraulic lines, filters and hydraulic pump. The brake system, although hydraulically operated, is not included in this section. The brake system along with landing gear is covered in Section VII.

This section also provides instructions for remedying difficulties which may arise in the operation of the hydraulic system. The instructions are organized so that the mechanic can refer to: Principles of Operation, for a basic understanding of the system; Troubleshooting, for a methodical approach in locating the difficulty; Corrective Maintenance, for removal, repair and installation of components; and Adjustments and Tests, for the operation of the repaired system.

CAUTION

Prior to starting any investigation of the hydraulic system, place the airplane on jacks. (Refer to Jacking, Section II.)

6-2. DESCRIPTION AND PRINCIPLE OF OPERATION. The hydraulic power pack is located in the fuselage nose section just aft of the nose baggage compartment, and is operated by a selector lever in the shape of a wheel mounted to the right of the left control column. The power pack contains the system reservoir and assorted valves which control the system operation. The power pack works in conjunction with various electrical switches and solenoid valves to perform the desired sequence of operation as selected by the control lever in the cockpit. Movement of the selector lever operates a control arm on the power pack through the use of a flexible cable assembly and connecting arms. A solenoid operated lock is located behind the instrument panel as part of the selector assembly to prevent the lever from being moved to the up position while the airplane is on the ground. (Weight of the airplane on the landing gear.) This solenoid is spring-loaded to the locked position and is activated by an anti-retraction (squat) switch mounted on the left main gear, upper torque link. The anti-retraction switch will also sound a warning horn if the selector lever is moved to the gear up position while the aircraft is on the ground and the master switch is ON. If the selector handle can be moved to the up position while the airplane is on the ground, it is an indication of an improperly adjusted selector mechanism or the anti-retraction system is inoperative. The anti-retraction switch is actuated by the last .250 of an inch of oleo extension. When the selector is moved to either the up or down position, it is locked in place by the action of the handle release valve at the power pack, acting against the release mechanism detent. The handle will remain in this position until it is manually released or until fluid pressure in the actuator and lock release reaches a preset pressure. At this time, the pressure forces the plunger in the lock release down, allowing the lever to return to either the up or down neutral position. (Depending on what the selector lever was set to.) An electrically operated door solenoid valve located in the power pack will position itself in the door (main inboard gear doors) open position when the selector lever is placed in the up or down position with the master switch on; this valve is spring-loaded in the open position and requires electrical current to remain in the closed position. In the event of an electrical failure, the valve will position itself in the open position and allow the doors to open when the selector lever is actuated and hydraulic pressure routed through the system.

The engine driven hydraulic pumps draw fluid from the power pack reservoir and pump it through the system filters mounted on the engine side of the fire wall, and check valves back to the pressure port of the power pack. Within the power pack, fluid travels into the gear door solenoid valve and landing gear selector pressure chamber. When the selector valve is in the neutral position, the fluid travels through the landing gear selector valve back to the reservoir.

When the selector valve is moved either to the up or down position, it electrically actuates the door solenoid valve to the open position, thus allowing fluid to flow through the door solenoid valve and into the hydraulic cylinders thus opening the doors. During the time the doors open, the gear priority valve remains closed as less pressure is required to operate the door cylinders. After the gear doors have opened, pressure continues to build up enough to allow the priority valve to open and permit fluid to flow through the gear selector valve to the gear actuating cylinders, thus allowing the gear to move to the selected up or down position.

After the gear has moved to the full up or down position, limit switches are actuated which cause the electrically operated door solenoid valve to move to the door closed position, allowing the door actuating cylinders to close the gear doors. When the doors have fully closed, pressure builds up in the time delay valve, operated by pressure in the closed door cylinders. The valve opens and allows fluid to flow to the handle release valve, thus returning the selector lever to neutral. With the selector in neutral, fluid is allowed to circulate back to the reservoir.

The main relief valve functions as a safety between the pump and selector valves. When the main relief valve opens, fluid is directed back to the reservoir. The hand pump relief valve also serves as a secondary relief valve. Valve operating pressures can be found in Table VI-I for Ozone Power Pack or Table VI-II for Wiebel Tool Power Pack.

The thermal relief vent valve functions as a safety to relieve pressure due to thermal expansion in the gear door actuating cylinders.

The hand pump serves as an emergency pump, should the engine driven pumps fail. The system check valves prevent the fluid from backing up through the engine driven pumps into the reservoir. In the event of severe leakage of the hydraulic fluid, the standpipe in the reservoir prevents the fluid level from dropping below the emergency quantity required for the operation of the system by means of the hand pump. The engine driven pumps are supplied with fluid through the standpipe, so that when the fluid level goes below the top of the standpipe, no fluid will flow. Thus, even though the system may develop a break, and the engine driven pumps continue to operate, devouring the system of fluid, the standpipe insures enough fluid in the reservoir for hand pump operation.

In case of an electrical failure, the door solenoid valve will move (spring pressure) to the door open position and remain in that position. The doors will not open until the selector lever is moved to the gear down position.

6-3. TROUBLESHOOTING. Malfunctions of the hydraulic system will result in failure of the landing gear to operate properly. When trouble arises, jack up the airplane (refer to Jacking, Section II), and then proceed to determine the extent of the trouble. Generally, hydraulic system troubles fall into two types; troubles involving the hydraulic supplying system and troubles in the landing gear hydraulic system. The extent of trouble can be found by operating the selector valve on the Power Pack. Table VI-IV, at the back of this section, lists the troubles which may be encountered and their probable cause, and suggests a remedy for the trouble involved. A hydraulic system operational check may be conducted beginning with Paragraph 6-5. When the trouble has been recognized, the first step in troubleshooting is isolating the cause. Hydraulic system troubles are not always traceable to one cause. It is possible that a malfunction may be the result of more than one difficulty within the system. Starting first with the most obvious and most probable reasons for the trouble, check each possibility in turn and, by process of elimination, isolate the troubles.

NOTE

If it is found that the Power Pack is at fault and requires disassembly, it is recommended that it be replaced on an exchange basis or overhauled by a recommended overhaul shop. If, however, this cannot be achieved, the Power Pack may be repaired in accordance with the instructions in this manual.

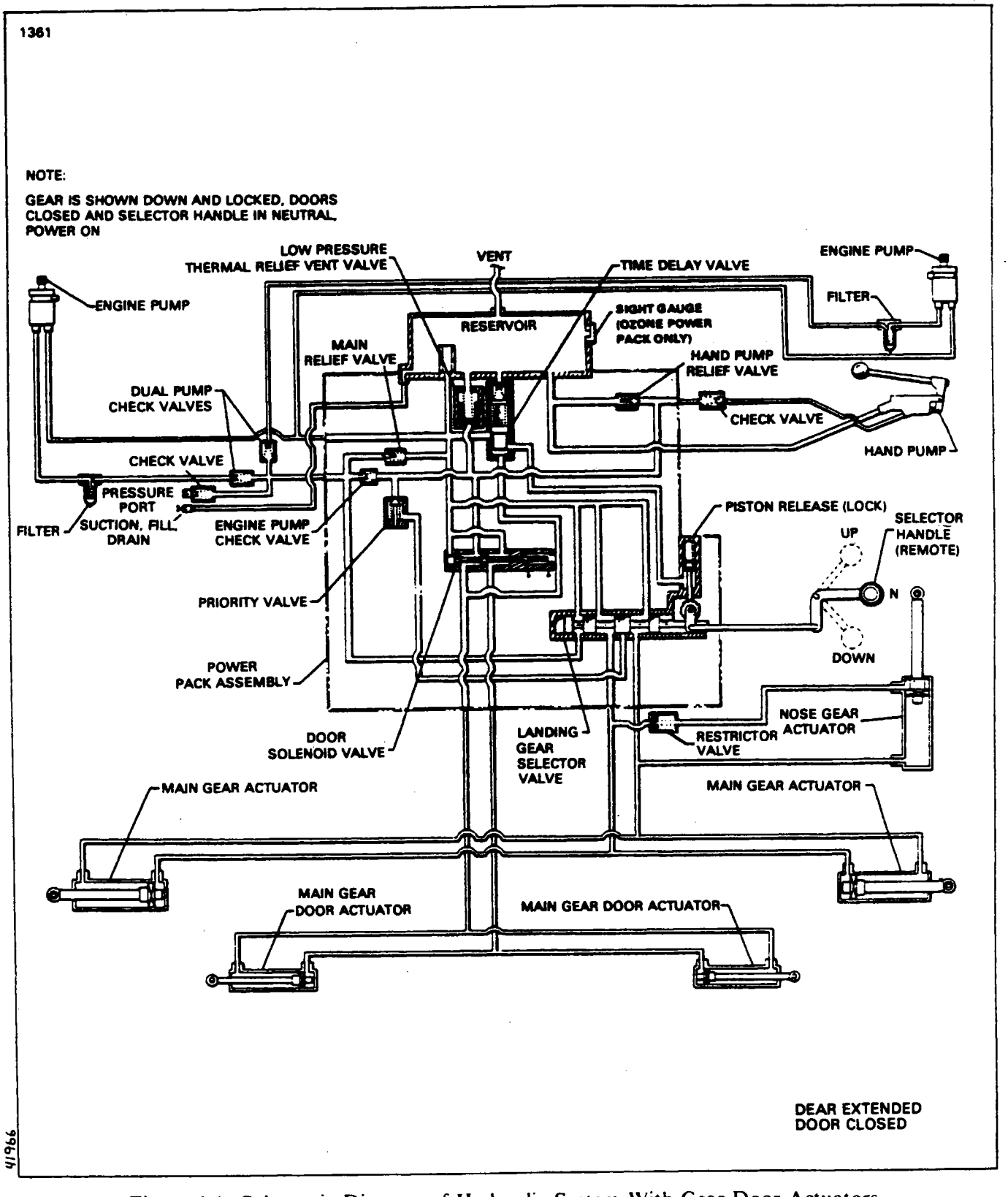

Figure 6-1. Schematic Diagram of Hydraulic System With Gear Door Actuators

NOTE
GEAR IS SHOWN DOWN AND LOCKED
AND SELECTOR HANDLE IN NEUTRAL

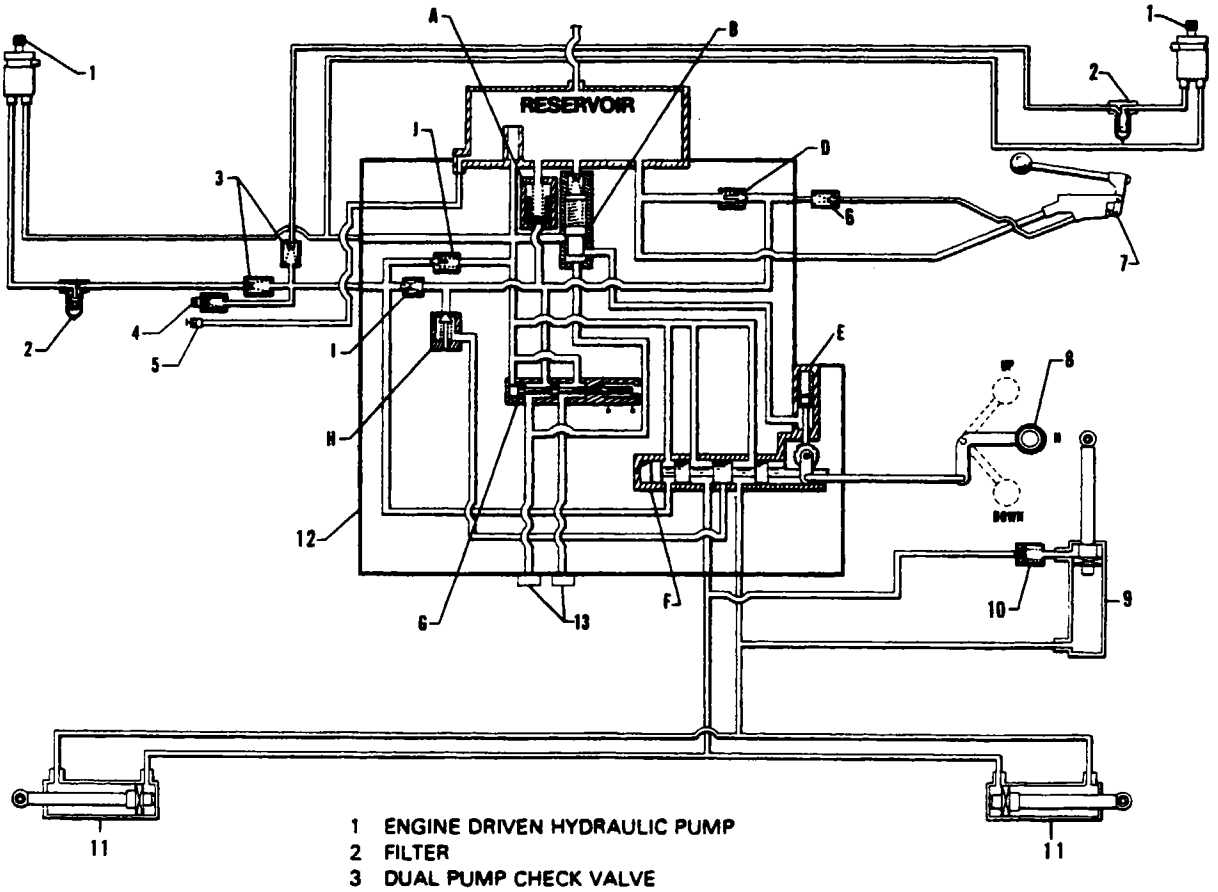

1 ENGINE DRIVEN HYDRAULIC PUMP
2 FILTER
3 DUAL PUMP CHECK VALVE
4 PRESSURE PORT
5 SUCTION - FILL
6 HAND PUMP CHECK VALVE
7 HAND PUMP
8 GEAR SELECTOR HANDLE
9 NOSE GEAR ACTUATOR
10 RESTRICTOR VALVE
11 MAIN GEAR ACTUATOR
12 POWER PACK ASSEMBLY
- A LOW PRESSURE THERMAL RELIEF VALVE
- B TIME DELAY VALVE
- C DELETED
- D HAND PUMP RELIEF VALVE
- E PISTON RELEASE (LOCK)
- F LANDING GEAR SELECTOR VALVE
- G DOOR SOLENOID VALVE
- H PRIORITY VALVE
- I ENGINE PUMP CHECK VALVE
- J MAIN RELIEF VALVE

13 PLUGS

02137

Figure 6-1a. Schematic Diagram of Hydraulic System Without Gear Door Actuators

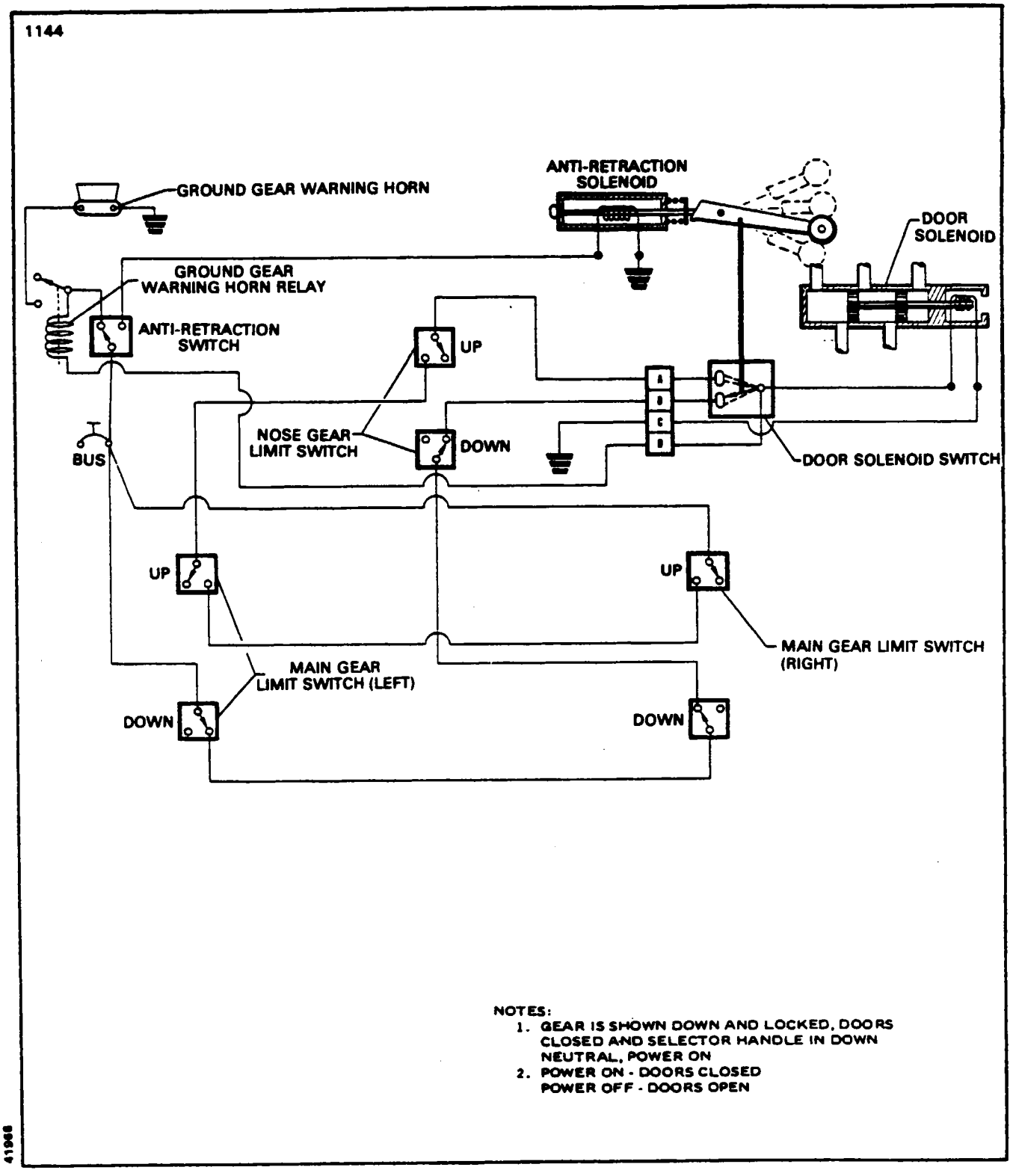

Figure 6-2. Schematic of Power Pack Electrical System

6-4. FLUSHING HYDRAULIC SYSTEM. When contamination of the hydraulic system is suspected, observe the color of hydraulic fluid in airplane's reservoir. If fluid appears discolored, or any other reason exists to suspect fluid contamination, draw off a fluid sample by uncapping the reservoir drain at the forward side of the Power Pack.

NOTE

Fluid sampling is necessary only when evidence exists to suspect contamination.

If contamination exists, the complete system should be drained and flushed to remove contaminated fluid. The cause and type of contamination should be determined and corrected. The following steps can be used to remove contaminated fluid:

a. Remove the engine cowlings as explained in Section VIII or Section VIIIA.
b. Drain the hydraulic fluid from the Power Pack reservoir.
c. Disconnect the hydraulic lines at the engine driven pumps.
d. Disconnect the hydraulic lines at the actuating cylinders and drain the fluid from all the hydraulic lines.
e. Remove the filter elements and flush out the filter bowls and install new filter elements. (Refer to Paragraph 6-154.)
f. Flush the hydraulic system with clean hydraulic fluid (MIL-H-5606). Examine seals and cylinder bores for damage.
g. When the hydraulic system is completely flushed and there is no more indication of contamination, reconnect the previously disconnected fittings and replenish the system with clean hydraulic fluid.
h. Bleed the hydraulic system and check for leaks. (Refer to Paragraph 6-99.)
i. Replace the engine cowlings as explained in Section VIII or Section VIIIA.

6-5. HYDRAULIC SYSTEM OPERATIONAL CHECKS.

6-6. HYDRAULIC TEST UNIT (PIPER NO. 753 080).

6-7. INTRODUCTION (PIPER TEST UNIT). This test unit will offer invaluable assistance in checking hydraulic systems, hydraulic Power Pack and related components. Examples are: gear cycling operation, Power Pack operating pressure, main relief valve cracking pressure, thermal relief vent valve cracking pressure, landing gear detent release pressure, etc.

This unit consists of an electric motor driven hydraulic pump, bypass valve, fluid reservoir, filter, pressure gauge, hoses, and adapter fittings housed in a metal cabinet mounted on casters.

6-8. CONNECTING TEST UNIT. Connect the hydraulic test unit to the aircraft as follows:

a. Remove the access panel on the right side of the nose section.
b. If the system requires filling only, remove the protective cap from the suction-fill-drain valve, and connect the pressure hose from the test unit. Open the valve on the suction port, and by placing the control lever in the up position, proceed to fill the system per instructions with test unit. Observe the sight gauge on Ozone power packs only, to determine when the reservoir is full or stop filling operation when fluid is seen draining from the overflow.
c. If the system must be operated during various ground checks, overhaul, or inspection of its components, remove the protective caps from both the suction and the pressure ports, and connect the test unit pressure hose to the pressure port and the test unit suction hose to the suction port. Open the valve on the suction port and proceed to operate the test unit according to instructions furnished with it.

TABLE VI-I. LEADING PARTICULARS, HYDRAULIC POWER PACK (OZONE)

NOMENCLATURE	OAS2930-7
Main Relief Valve Pressure (Primary)	1875-1925 PSI (-7)
Hand Pump Relief Valve Pressure (Secondary)	2050-2100 PSI (-7)
Hand Pump Relief Valve Reseat Pressure	1500 PSI
Low Pressure Thermal Relief (Door Vent) Valve Cracking Pressure	50 PSI
Low Pressure Thermal Relief (Door Vent) Valve Reseat Pressure	150 PSI
Priority Valve Cracking Pressure	600 to 650 PSI
Engine Pump Check Valve Cracking Pressure	10 PSI
Landing Gear Handle Position Release	1650-1775 PSI (-7)
Time Delay Valve	3 to 9 seconds
Hydraulic Fluid Required	MIL-H-5606
Reservoir Operating Capacity (Engine Pump)	2.46 pints
Reservoir Capacity (Emergency)	0.935 pints
Weight Dry - Power Pack	10.50 pounds
Hydraulic Fluid Flow Rate	1.6 G.P.M.

TABLE VI-II. LEADING PARTICULARS, HYDRAULIC POWER PACK (WIEBEL TOOL)

NOMENCLATURE	WTC 2135-1
Operating Pressure	1900 PSI
Main Relief Valve Pressure (Primary)	1900-1950 PSI
Hand Pump Relief Valve Pressure (Secondary)	2025-2100 PSI
Hand Pump Relief Valve Reseat Pressure	1900 PSI Min.
Low Pressure Thermal Relief Vent Valve "Open"	0 to 100 PSI
Low Pressure Thermal Relief Vent Valve "Closed"	150 PSI Max.
Priority Valve Cracking Pressure	600 to 650 PSI
Hand Pump Check Valve Cracking Pressure	1 to 3 PSI
Landing Gear Handle Position Release	800-1250 PSI
Time Delay Valve	5 to 9 seconds
Hydaulic Fluid Required	MIL-H-5606
Weight Dry - Power Pack	10.50 pounds
Hydraulic Fluid Flow Rate (Both Pumps Operating)	1.6 G.P.M.

6-9. CYCLING LANDING GEAR.

CAUTION

When cycling the landing gear DO NOT use the manual hand pump located between the pilot and copilot seats for this operation.

a. Connect the hydraulic test unit in accordance with Paragraph 6-8 and jack the airplane as outlined in Section II.
b. Set the hydraulic test unit bypass valve open.
c. Start the test unit pump motor.
d. Slowly close the bypass valve completely.
e. Using the landing gear control handle in the airplane, operate the gear as desired.

NOTE

Gear cycling time can be prolonged by slowly opening the test unit bypass valve part way. This will bleed off part of the pump flow.

f. After completion of cycling, open the test unit bypass valve and stop the pump motor.
g. Disconnect the hydraulic test unit in accordance with Paragraph 6-17.
h. Ascertain that the landing gear selector handle is in the down neutral position, and that the landing gear is down and locked.
i. Check the indicator lights for proper operation.
j. Remove the airplane from jacks.

6-10. CHECKING TIME DELAY VALVE.

a. Connect the hydraulic test unit in accordance with Paragraph 6-8.
b. With test unit operating and airplane master switch ON, move the landing gear selector handle to the down position. Note the delay of the handle returning to the neutral position.

NOTE

The time delay between moving the selector handle to the down position (master switch must be ON) and the automatic releasing of the selector handle to neutral should be (refer to Tables VI-I or VI-II) at room temperature. Colder temperature will cause a longer delay.

c. If the time delay fails specification given in preceding "Note" ascertain that valve is not air locked. Bleed air out by holding selector down for 30 seconds, then make three or four rapid movements to neutral and back to down.
d. There is no adjustment of the time delay valve. If it is defective, refer to Paragraph 6-21 or 6-55 for disassembly and repair of the Power Pack.
e. Disconnect hydraulic test unit in accordance with Paragraph 6-17.

6-11. CHECKING HANDLE RELEASE TO NEUTRAL.

a. Place airplane on jacks. (Refer to Jacking, Section II.)

b. Connect hydraulic test unit in accordance with Paragraph 6-8.

c. Cycle the landing gear through two complete cycles in accordance with Paragraph 6-9, ending with gear down and locked, and inboard doors closed.

d. Set the hydraulic test unit bypass valve full open.

e. Place the landing gear selector handle in the full down position.

f. Very slowly close the bypass valve until the handle trips back to neutral. Read the gauge at the point of handle trip. The pressure should be as indicated in Table VI-I or VI-II. Be sure to allow for the time delay valve to open.

NOTE

One release valve serves to release the handle from both the gear down and gear up positions. If the handle return springs are adjusted correctly, the release valve should release the handle from both positions at the same pressure. The preceding procedure checks the release pressure from the gear down position, and the following procedure checks the release pressure from the gear up position. This is performed only to assure satisfactory operation of other equipment relative to handle release operations.

g. Set the hydraulic test unit bypass valve full open.

h. Place the landing gear selector handle in the full up position.

i. Very slowly close the bypass valve until the handle trips back to neutral. Read the gauge at the point of handle trip. This pressure should be as indicated in Table VI-I or VI-II. Be sure to allow for time delay valve to open.

j. Refer to Paragraph 6-45 or 6-85 for handle release adjustment.

k. Ascertain that the landing gear selector handle is in the down neutral position, and that the landing gear is down and locked.

l. Disconnect the test unit in accordance with Paragraph 6-17 and remove the airplane from jacks.

6-12. CHECKING PRIORITY VALVE.

a. Connect the hydraulic test unit in accordance with Paragraph 6-8 and place the airplane on jacks, in accordance with Jacking, Section II.

b. Cycle the landing gear through two complete cycles in accordance with Paragraph 6-9.

c. With gear down and locked and test unit operating, turn the master switch off to open the gear doors. Leave the switch off to permit the doors to remain open, thereby making it easier and faster to complete this check.

d. Open the hydraulic test unit bypass valve.

e. Place the landing gear selector handle full up. Very slowly close the bypass valve, observing the pressure gauge of the test unit and noting the pressure at which the priority valve opens. Priority valve should open at the pressure indicated in Table VI-I or VI-II.

NOTE

As the priority valve opens, the nose gear downlock starts to release. Read the pressure gauge at this point.

f. Refer to Paragraph 6-48 or 6-88 for priority valve adjustment.

g. Ascertain that the landing gear selector handle is in the down neutral position, and that the landing gear is down and locked.

h. Disconnect the test unit in accordance with Paragraph 6-17 and remove the airplane from jacks.

6-13. CHECKING MAIN RELIEF VALVE.

a. Connect the test unit in accordance with Paragraph 6-8.

b. Open the test unit bypass valve.

c. Hold the landing gear selector handle in the full down position.

d. Slowly close the bypass valve, observing pressure buildup and the point at which the pressure stabilizes on the test unit gauge. Stabilization indicates relief valve setting. The relief valve pressure and flow rate are given in Table VI-I or VI-II.

e. The Ozone power pack must be removed and partially disassembled to adjust the main relief valve setting. (Refer to Paragraph 6-47.) The Wiebel Tool power pack main relief valve adjustment is accomplished with the power pack installed in the airplane. Remove the cover to gain access to adjusting screw. (Refer to Paragraph 6-87.)

f. Disconnect the hydraulic test unit in accordance with Paragraph 6-17.

6-14. CHECKING HAND PUMP RELIEF VALVE.

a. Place the landing gear selector handle in the full down position. With the master switch OFF, operate the emergency hand pump to open the landing gear doors.

b. Disconnect the door open line (upper fitting) from the main gear door cylinder and connect the hydraulic test unit pressure hose to the door open line. Cap the actuator fitting.

c. Close the bypass valve on the hydraulic test unit.

d. Operate emergency hand pump in airplane, observing hydraulic test unit pressure gauge for pressure at which hand pump relief valve opens. This pressure should be as indicated in Table VI-I or VI-II.

e. The Ozone power pack must be removed and partially disassembled to adjust hand pump relief valve setting. (Refer to Paragraph 6-46.) The Wiebel Tool power pack hand pump relief valve adjustment is accomplished with the power pack installed in the airplane. Remove the cover to gain access to adjusting screw. (Refer to Paragraph 6-86.)

f. Open bypass valve on test unit to release the pressure, disconnect the test unit pressure hose from door open line. Remove cap from actuator fitting and reconnect door open line to main gear door actuator.

g. Replenish hydraulic reservoir fluid as required.

6-15. CHECKING FOR SUCTION AIR LEAKAGE.

a. Remove the engine cowling for access.

b. Disconnect the hydraulic pump suction (larger) hose from the pump and connect the test unit suction hose to the airplane suction hose, using a suitable fitting.

c. Disconnect the hydraulic pump pressure (smaller) hose from the pump and connect the test unit pressure hose to the airplane pressure hose, using a suitable fitting.

d. Connect the test unit electrical cable to an appropriate electrical power source.

e. Jack the airplane and cycle the landing gear through five complete cycles.

f. Observe the test unit reservoir for any air bubbles which would indicate leakage in the suction line, hose or fittings. Replace defective parts.

NOTE

If replacement of parts stops any visible air in the test unit reservoir, but air still enters the hydraulic system, the engine driven pump may have a suction leak.

g. Ascertain that the landing gear selector handle is in the down neutral position, and that the landing gear is down and locked.

h. Remove the airplane from jacks and disconnect the test unit in accordance with Paragraph 6-17.

6-16. CHECKING LANDING GEAR CYCLE TIME. When the hydraulic system on the airplane is suspected of malfunction because gear cycle time is slow, it could be caused by low fluid in airplane reservoir causing system to be full of air. The following procedure will purge air from system and fill the reservoir:

a. Place the airplane on jacks in accordance with Jacking, Section II.

b. Cycle the landing gear through two complete cycles in accordance with Paragraph 6-9.

c. With landing gear extended, place gear handle in full up position and record time required for gear to retract and doors to close. Time should not exceed 9 seconds ± .5 seconds plus the time required for the time-delay valve to operate. (Refer to Paragraph 6-10.)

d. With landing gear retracted, place gear handle in full down position and record time required for gear to extend and doors to close. Time should not exceed 8 seconds ± .5 seconds plus the time required for the time-delay valve to operate. (Refer to Paragraph 6-10.)

NOTE

These times are taken using a single test unit. These times can be reduced considerably with the use of two test units, one hooked to each fire wall fitting.

NOTE

If time is within limit when operated by test unit, but exceeds limit when operated by engine driven pump, there is internal leakage in the pump. Repair or replace the pump. If time exceeds the limit when operated either by the test unit or engine driven pump, internal leakage is in the hydraulic system. Check actuators for internal leakage. Repair or replace actuators as required. If actuators are not defective, Power Pack internal leakage is indicated. Repair or replace Power Pack. (Refer to Paragraph 6-31 or 6-68 for repair of hydraulic components.)

6-17. DISCONNECTING TEST UNIT.

a. Ascertain that the landing gear selector is in the down neutral position, and the landing gear is down and locked.

b. Shutdown the test unit per instruction supplied with the unit.

c. Close the suction-fill-drain valve in the airplane by placing the control lever in the down position and disconnecting the test unit hose from the fitting. Install the protective cap over the fitting. Disconnect and remove the test unit pressure hose from the pressure fitting in the airplane if previously connected. Install the protective cap on the fitting.

d. Check the fluid level in the Power Pack reservoir and check the system for leaks.

e. Install the access panel on the right side of the nose section.

6-18. HYDRAULIC TEST UNIT (OPTIONAL). Multi-purpose hydraulic test units can be used to provide the same functions as the Piper unit; however, the test unit must be capable of duplicating and monitoring the operating pressures and flow rate given in Table VI-I or VI-II.

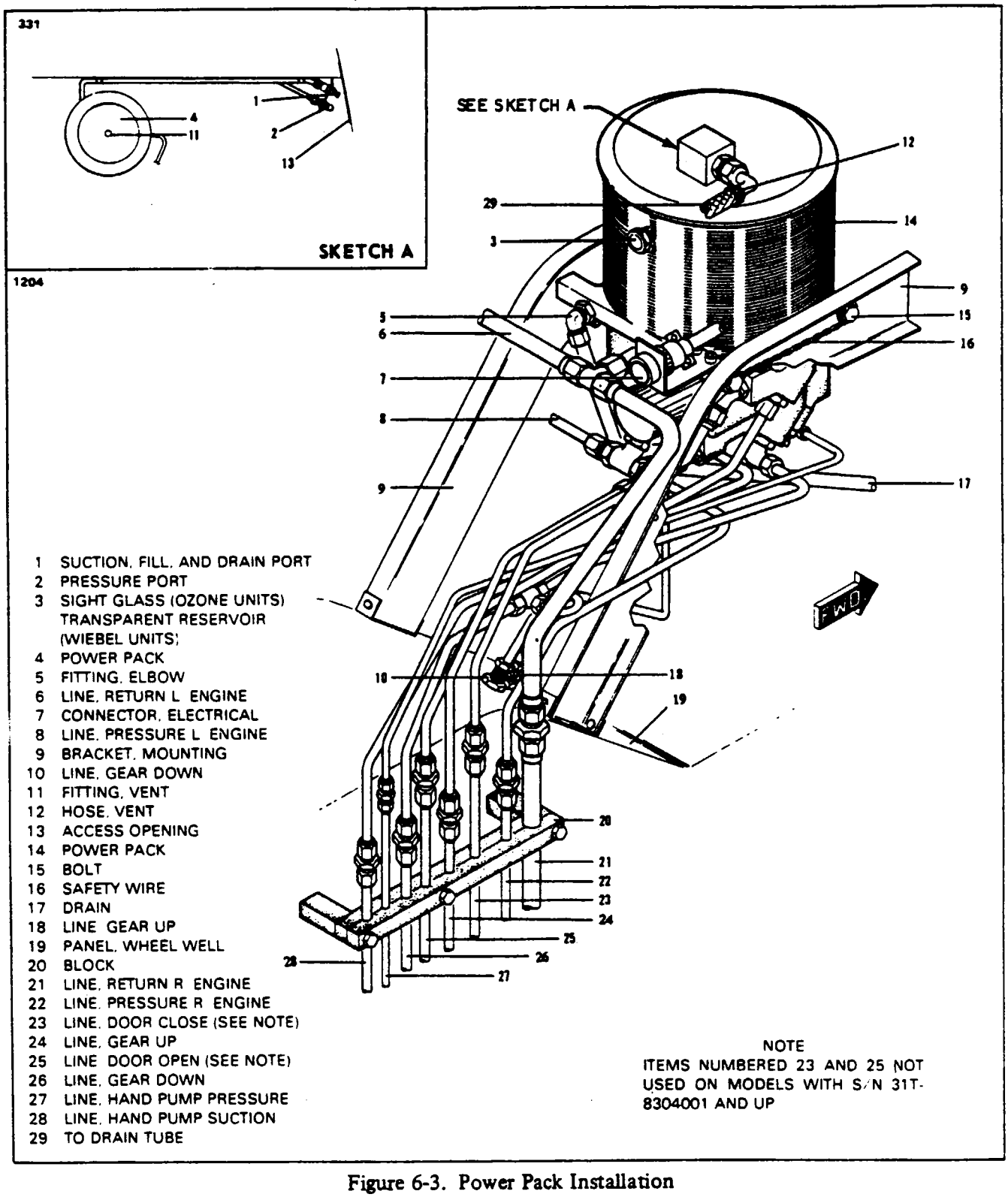

Figure 6-3. Power Pack Installation

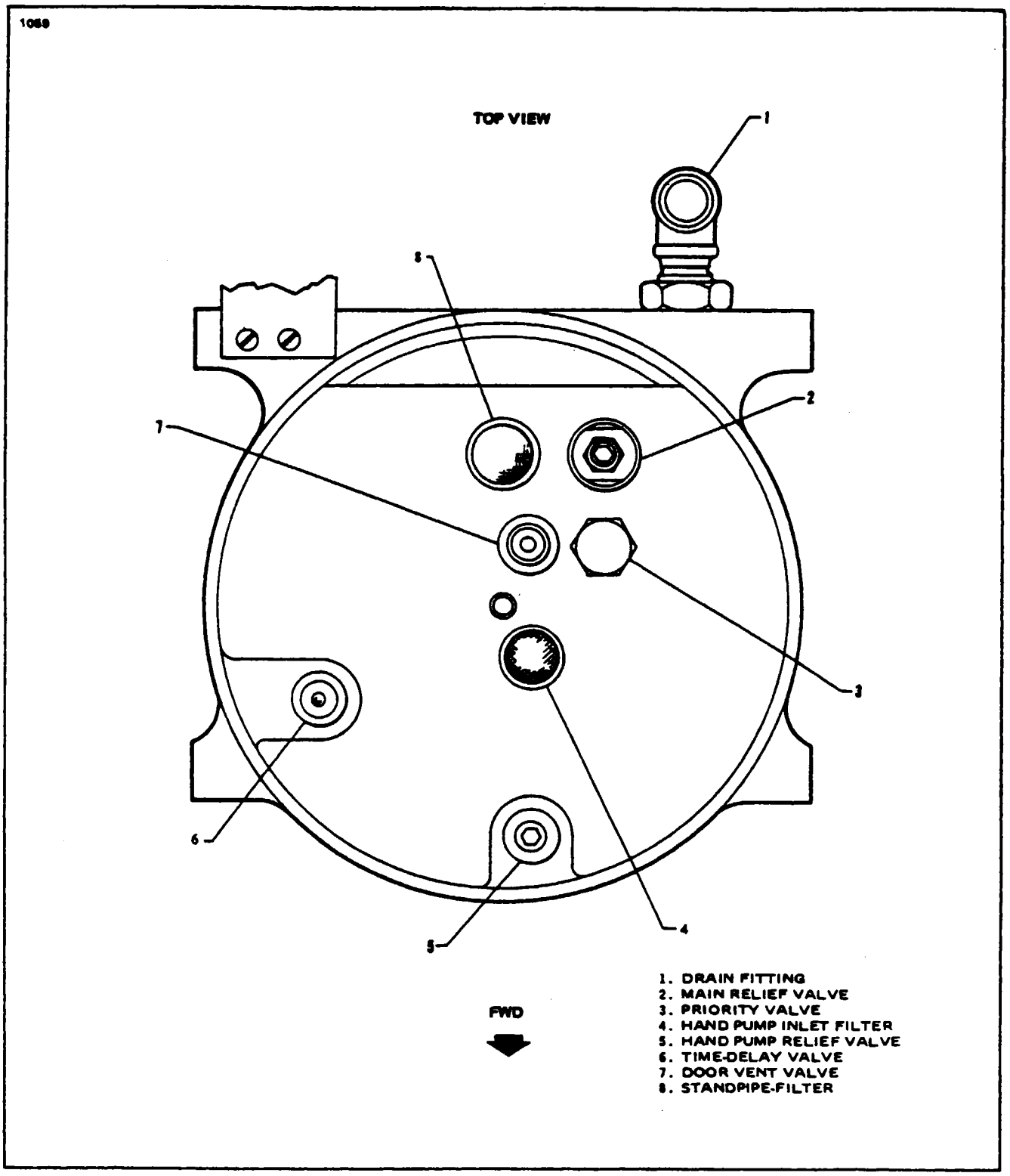

Figure 6-4. Location of Power Pack Components (Ozone)

6-19. HYDRAULIC POWER PACK (OZONE).

6-20. REMOVAL OF POWER PACK. (Refer to Figure 6-3.)

a. Remove the access panels to the Power Pack on both sides of the fuselage nose section. Also remove the upper access panel on the aft bulkhead of the forward baggage compartment.

NOTE

All disconnect and removal work can be accomplished from the upper baggage compartment access or right access panel.

b. Drain the Power Pack by removing the drain cap from the end of the drain line (17) on the right side of the fuselage nose section. Place a suitable container under the drain to catch the fluid. Replace the cap after the reservoir is empty.

c. To gain access to Power Pack, remove return air duct muffler, combustion air blower and appropriate hoses from right side of fuselage nose section.

d. Disconnect the electrical connector (7) located at the aft end of the Power Pack (4).

e. Disconnect the vent line (12) from the Power Pack cap (4).

f. Disconnect the gear selector control cable from the Power Pack control arm on the left side of the Power Pack.

g. Disconnect the various hydraulic lines from the Power Pack. Cap the open lines to prevent contamination.

h. Cut the safety wire and remove the attachment bolts (15) which secure the Power Pack to the mounting brackets (9).

i. Move the Power Pack to the rear and then out the right access panel.

6-21. DISASSEMBLY OF POWER PACK. (Refer to Figure 6-5.) After the Power Pack has been removed from the airplane and all ports are capped or plugged, spray with cleaning solvent (Federal Specification P-S-661, or equivalent) to remove all accumulated dust or dirt. Dry with filtered compressed air. To disassemble the unit, proceed as follows:

a. Remove the retaining nut (85), O-ring (86) and reservoir cover (55). The cover is a snug fit on the reservoir. Use a soft mallet and tap the cover lightly to remove. Remove large O-ring (84).

b. Remove the sight gauge (20).

c. Remove the spacer (83) from the cover center stud (21); cut safety wire and remove baffle (80) from the reservoir. Drain the remaining hydraulic fluid from the reservoir.

d. Remove the reservoir cover center stud (21). This stud may be removed by using a double locknut at the top of the stud. Use care to prevent damage to the stud threads.

e. Turn the Power Pack upside down so that the top of the reservoir serves as a support base.

NOTE

All electrical wires are coded with color stripes. Disregard the color of the wire terminals or plastic sleeving. If color codes are matched when wires are reinstalled, the wires will be connected correctly.

f. Cut the safety wire and remove the screws attaching the landing gear up-down switch and bracket. Retain washers between bracket and Power Pack manifold. (Refer to Figure 6-6.)

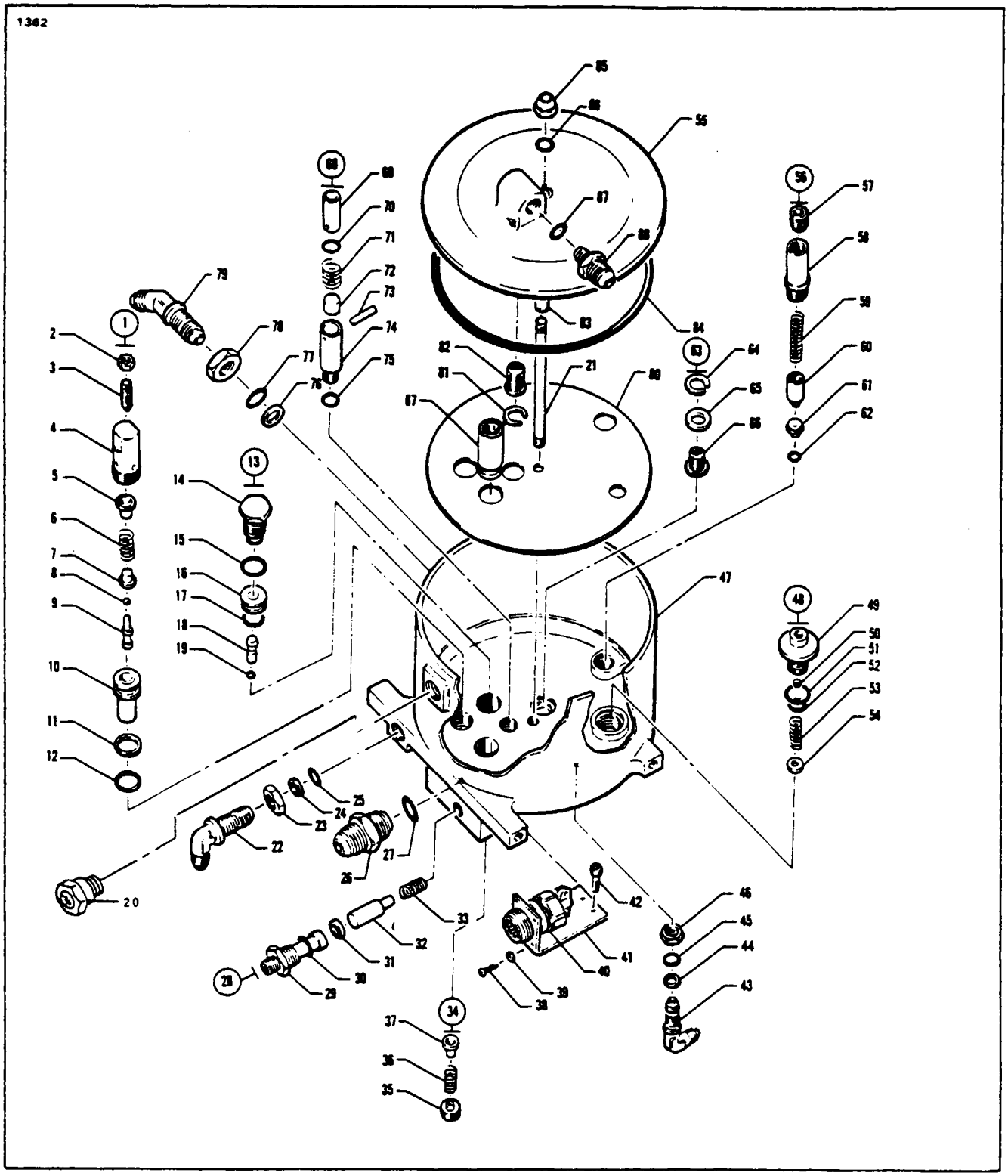

Figure 6-5. Hydraulic Power Pack (Ozone)

1. MAIN RELIEF VALVE
2. LOCK NUT
3. ADJUSTING SCREW
4. RETAINER
5. BUTTON
6. SPRING
7. BUTTON
8. BALL
9. POPPET
10. POPPET SEAT
11. BACK-UP RING
12. "O" RING
13. PRIORITY VALVE
14. RETAINER, PRIORITY
15. "O" RING, RETAINER
16. POPPET SEAT
17. "O" RING, POPPET SEAT
18. POPPET
19. "O" RING, POPPET
20. SIGHT GAUGE
21. CENTER STUD
22. FITTING
23. NUT
24. BACK-UP RING
25. "O" RING
26. FITTING
27. "O" RING
28. HAND PUMP CHECK VALVE
29. SYSTEM PRESSURE PORT FITTING
30. "O" RING, FITTING
31. "O" RING
32. PLUNGER
33. SPRING
34. PRIORITY VALVE ADJUSTMENT
35. RETAINER, ADJUSTING PLUG
36. SPRING
37. BUTTON
38. SCREW
39. WASHER
40. PLUG
41. BRACKET
42. SCREW
43. FITTING
44. BACK-UP
45. "O" RING
46. NUT
47. BODY
48. TIME DELAY VALVE
49. RETAINER
50. BALL
51. "O" RING, RETAINER HEX
52. "O" RING, RETAINER BODY
53. SPRING
54. SPACER
55. COVER, RESERVOIR
56. HAND PUMP RELIEF VALVE
57. ADJUSTING PLUG
58. RETAINER, HAND PUMP RELIEF
59. SPRING
60. POPPET
61. SEAT
62. "O" RING
63. HAND PUMP SUCTION SCREEN
64. SNAP RING
65. SPACER
66. SCREEN, SUCTION
67. STANDPIPE - FILTER
68. DOOR VENT VALVE
69. RETAINER
70. "O" RING
71. SPRING
72. POPPET
73. PIN
74. BODY, VALVE
75. "O" RING
76. BACK-UP
77. "O" RING
78. NUT
79. FITTING
80. PLATE -
81. SNAP RING
82. FILTER, VENT
83. SPACER
84. "O" RING, LARGE
85. NUT, RETAINER
86. "O" RING, COVER
87. "O" RING, VENT
88. FITTING, VENT

Figure 6-5. Hydraulic Power Pack (Ozone) (cont.)

g. Turn the Power Pack over and cut the safety wire at the time-delay valve.
h. Remove the time-delay valve ball, spring, spacer, and spring by removing the time-delay retainer.

NOTE

Do not remove the time-delay plunger until after the manifold assembly has been removed.

i. Cut the safety wire and remove the screws attaching the gear and rack protective cover. Remove the cover.
j. Remove the clamp attaching the electrical wires to the door solenoid valve and remove the safety wire from the door solenoid valve.
k. Cut the safety wire and remove the four screws attaching the manifold assembly. Work the manifold assembly from the Power Pack, taking care to prevent loss of transfer tubes between the manifold and Power Pack.
l. Remove the seven transfer tubes from the manifold or Power Pack.

CAUTION

As the manifold is separated from the Power Pack body, the rack on the landing gear selector spool becomes disengaged from the gear. This will permit the selector spool to move. DO NOT remove the selector spool from its position. Never move it to a position that is more than flush with the manifold body at the end opposite the selector spool rack. If moved beyond this position, an O-ring will become caught and the selector spool will then be extremely difficult to remove.

6-22. DISASSEMBLY OF MANIFOLD. (Refer to Figure 6-6.)
a. Cut the safety wire (30) and remove the door solenoid (11) by unscrewing it from the manifold (24). This solenoid is hand tightened. Use a strap wrench or strip of sandpaper to grip the door solenoid for removal. Remove the plunger return spring (13).
b. Remove the plunger retainer pin (14), and then remove the plunger (15) from the spool (7) by carefully pulling it from the manifold.
c. Using a hook formed from a brass welding rod, withdraw the transfer sleeve from the manifold by inserting the hook into the oil hole in the transfer sleeve (5).

NOTE

Be sure that the end of the hook is not over .062 inch long, and use the hook with care to prevent scratching the bore in the manifold. The sleeve will be hard to withdraw due to O-ring friction.

d. Remove the plunger (3) of the time-delay valve, using a small wooden dowel inserted in the center of the plunger. The plunger should slide out of the manifold easily.
e. Remove the landing gear selector spool (26) by grasping the rack end of the spool and carefully pulling it from the manifold.

NOTE

Do not bend the selector spool. Pull it straight out. The landing gear selector spool (26), time-delay plunger (3), and manifold (24) are matched, lapped parts. If it is necessary to replace any one of these parts, replace them as an assembly only.

f. Remove the landing gear handle-release retainer (17) (adjusting plug), nut (31), spring (18), screw (32), and poppet (20) from the manifold. The end of the poppet has a ball which should remain in the poppet. If it doesn't, remove the ball from the manifold.

g. Remove the caps from the fittings and wash the manifold in cleaning solvent (Federal Specification P-S-661 or equivalent) and dry it with filtered compressed air. Be sure internal passages are clean; then reinstall caps on fittings.

6-23. DISASSEMBLY OF HAND PUMP SUCTION SCREEN. (Refer to Figure 6-5.)

a. Remove the suction screen (63) by removing the snap ring (64) and spacer (65).

6-24. DISASSEMBLY OF HAND PUMP RELIEF VALVE. (Refer to Figure 6-5.)

a. Remove the adjusting plug (57) at the top of the hand pump relief valve.
b. Remove the hand pump relief valve retainer (58) by unscrewing it from the body.
c. Remove the spring (59) and poppet (60) from the body.
d. Use a brass hook to remove the seat (61) from the body. Use care to prevent scoring the bore.
e. Remove the O-ring (62) from the bottom of the cavity.

6-25. DISASSEMBLY OF MAIN RELIEF VALVE. (Refer to Figure 6-5.)

a. Loosen the locknut (2) at the top of the main relief valve.
b. Remove the adjusting screw (3) and locknut (2) from the top of the relief valve.
c. Unscrew the retainer (4).
d. Remove the two buttons (5 and 7), spring (6) and ball (8).
e. Remove the poppet (9) from the poppet seat (10) by lifting out of the poppet assembly. The poppet and poppet seat are matched parts.
f. Using a brass hook not over .125 inch long, pull the poppet seat up out of the body. Hook through holes in the side of the seat and use care not to damage the bore in the body.

6-26. DISASSEMBLY OF PRIORITY VALVE. (Refer to Figure 6-5.)

a. Remove the priority retainer (14) from the reservoir.
b. Turn the Power Pack upside down and remove the retainer (35) (adjusting plug), spring (36), and button (37) from the bottom of the Power Pack.
c. While the Power Pack is upside down, push the poppet (18) and poppet seat (16) into the reservoir, using a punch of .125 inch maximum diameter. Make sure that the face of the punch is square and flat.

6-27. DISASSEMBLY OF HAND PUMP CHECK VALVE. (Refer to Figure 6-5.)

a. Remove the system pressure port fitting (29). The spring (33) and plunger (32) should fall out of the Power Pack after the O-ring (31) is removed. Use hook, if necessary to remove the O-ring.

6-28. DISASSEMBLY OF STANDPIPE AND FILTER. (Refer to Figure 6-5.)

a. The standpipe and filter assembly (67) should not be removed unless it is damaged, since it is a press fit in the reservoir.
b. Remove the vent filter (82) by removing the snap ring (81).

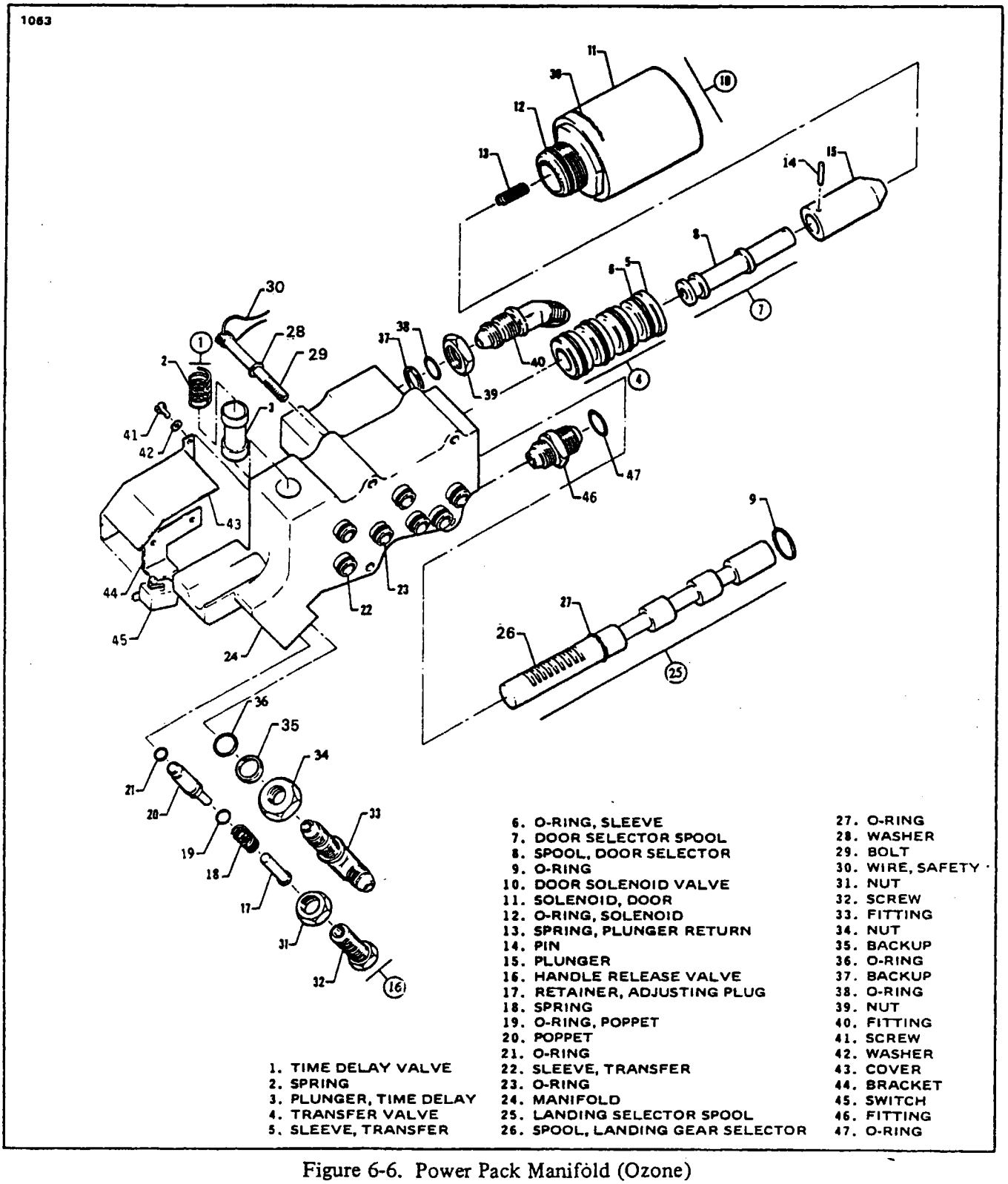

Figure 6-6. Power Pack Manifold (Ozone)

6-29. DISASSEMBLY OF DOOR VENT VALVE. (Refer to Figure 6-5.)

a. Remove the door vent valve (68) from the reservoir. Remove the O-ring (75) from the body. The door vent valve should not be disassembled except for replacement of parts.

b. Remove the pin (73) from the valve body (74) and retainer (69). Use care when removing the pin, as the spring (71) is under a slight load.

c. Remove the retainer (69), O-ring (70), and poppet (72) from the valve body (74).

NOTE

The valve body and poppet are matched parts. If necessary to replace, replace as an assembly only.

6-30. DISASSEMBLY OF LANDING GEAR HANDLE AND HANDLE-RELEASE MECHANISM. (Refer to Figure 6-7.)

a. Remove the two hex-head retainers (12) (adjusting plugs), springs (11), and plungers (10) from the handle return housing.

b. Cut the safety wire (9) and remove the two screws (8) attaching the handle release housing to the Power Pack, and remove the housing.

c. Using a punch, drive the roll pin from the cam, and remove the cam from the landing gear handle shaft.

d. Pull the assembly from the Power Pack.

6-31. CLEANING, INSPECTION AND REPAIR OF POWER PACK.

a. Discard all old O-rings and gaskets.

b. Remove the line fitting caps and wash all parts in dry cleaning solvent (Federal Specification P-S-661, or equivalent) and dry them with filtered compressed air.

c. Inspect all parts for scratches, scores, chips, cracks, and indications of excess wear.

d. Repairs are limited to replacement of parts, O-rings and gaskets.

e. The Parts Catalog should be used to obtain the proper parts for the Power Pack being serviced.

6-32. ASSEMBLY OF POWER PACK.

a. Use new O-rings and gaskets during assembly.

b. Lubricate all O-rings with petrolatum per VV-P-236 or equivalent during assembly.

c. Lubricate all threaded surfaces on the various valves in the Power Pack with MIL-G-7711 grease or equivalent before installing.

6-33. ASSEMBLY OF DOOR VENT VALVE. (Refer to Figure 6-5.)

NOTE

The valve body and poppet are matched parts. If necessary to replace, replace as an assembly only.

a. Install the poppet (72) in the valve body (74) and insert the spring (71) in the body. Be sure that the spring enters the poppet.

b. Lubricate and install the O-ring (70) on the retainer (69) and insert the retainer in the valve body (74). Align the holes in the retainer with the holes in the valve body.

c. Install the pin (73) through the valve body and retainer.

d. Lubricate threads; install O-ring (75) on the valve body and install the assembly in the reservoir. Tighten securely.

6-34. ASSEMBLY OF STANDPIPE AND FILTER. (Refer to Figure 6-5.)

a. If the standpipe and filter assembly (67) was removed, press into the body until the standpipe bottoms.

b. Replace the vent filter (82) and the snap ring (81).

6-35. ASSEMBLY OF HAND PUMP CHECK VALVE. (Refer to Figure 6-5.)

a. With the pressure port up, drop the spring (33) into the port.

b. Drop in the plunger (32), making sure that the small end of the plunger goes into the spring. Check freeness of the plunger in the body by depressing the plunger against the spring. Use a small wooden dowel or plastic rod to depress the plunger when checking for freedom of movement. The plunger must move freely in the body bore.

c. Lubricate and install the O-rings (30 and 31) on the flange of the fitting (29) and at the end of the fitting. Lubricate the threads; insert the fitting. Start threads and tighten securely.

6-36. ASSEMBLY OF PRIORITY VALVE. (Refer to Figure 6-5.)

a. Lubricate and install the O-ring (19) on the poppet (18) and insert the poppet in the body through the reservoir. Push the poppet down firmly. Either surface may be used as the seating surface.

b. Inspect the poppet seat for a sharp seating edge. Lap as necessary to obtain a sharp seating edge. Lubricate and install the O-ring (17) on the poppet seat (16).

c. Install the poppet seat in the body through the reservoir, with the sharp seating edge toward the poppet. Push the poppet seat (16) down firmly against the poppet (18).

d. Lubricate and install the O-ring (15) on the retainer (priority) assembly (14); lubricate the retainer threads and install the retainer. Tighten securely.

e. Turn the Power Pack upside down; lubricate the spring (36) and button (37) and install the body (47). Apply lubricant to hold the button in the spring and install with the button in the hole first.

f. Lubricate the threads on the retainer (35) (adjusting plug) and install. This plug provides adjustment for the priority valve. Install flush at this time.

6-37. ASSEMBLY OF MAIN RELIEF VALVE. (Refer to Figure 6-5.)

a. Inspect the poppet (9) and poppet seat (10) for pitting or scoring. Since they are matched parts, if either or both are pitted or scored, replace as an assembly only.

b. Lubricate and install the O-ring (12) and backup ring (11) on the poppet seat (10); insert the poppet (9) in the seat (10) and install the assembly in the body.

c. Lubricate the ball (8), buttons (5 and 7) and spring (6). Install with the ball entering the hole first. Be sure that the ball enters the cavity at the top of the poppet.

d. Lubricate the threads on the retainer (4) and install over the button (5) and spring (6). Tighten securely.

e. Lubricate the threads of the adjusting screw (3) and install at the top of the retainer (4). Turn the adjusting screw full down to lock the main relief valve closed but do not tighten the locknut (2). This is done so that the hand pump relief valve, which opens at a higher pressure, can be adjusted before the main relief valve is adjusted.

6-38. ASSEMBLY OF HAND PUMP RELIEF VALVE. (Refer to Figure 6-5.)

a. Lubricate and install the O-ring (62) in the body (47). Make sure the O-ring seats properly.

b. Inspect the seating surface of the seat (61). It should have a very sharp edge. The seat may be lapped to obtain a sharp edge.

c. Install the seat (61) in the body, with the sharp edge of the seating surface up.

d. Install the poppet (60) and spring (59) together and insert in the body with the ball end toward the seat.

e. Lubricate the threads on the retainer hand pump, secondary relief (58). Start the retainer over the spring (59) and tighten securely.

f. Lubricate the threads on the adjusting plug (57) and install at the top of the retainer (58). Do not tighten the adjusting plug. Screw it down only until the spring is contacted. This is done so that air may be bled from the valve during adjustment.

6-39. ASSEMBLY OF HAND PUMP SUCTION SCREEN. (Refer to Figure 6-5.)

a. Install the suction screen (66) and spacer (65); secure with snap ring (64).

6-40. ASSEMBLY OF MANIFOLD. (Refer to Figure 6-6.)

a. Lubricate and install the O-ring (27) on the landing gear selector spool (26), and the O-ring (9) in the manifold (24) at the opposite end.

NOTE

The landing gear selector spool, time-delay valve plunger, and manifold are matched, lapped parts. If necessary to replace, replace as an assembly only.

b. Insert the selector spool (26) in the manifold (24) from the landing gear handle end of the manifold. Insert only until the end of the selector spool is flush with the solenoid end of the manifold.

CAUTION

If the selector spool is moved much more than flush with the manifold at the end opposite the rack (before the manifold is installed and the rack engaged properly with the gear), an O-ring will become caught. The selector spool will then have to be removed; the manifold cleaned to remove all O-ring particles and a new O-ring installed. The selector spool then must be reinstalled correctly.

c. Check that the landing gear selector spool (25) slides freely.

d. Inspect the door solenoid spool for freedom of movement within the transfer sleeve assembly.

NOTE

The spool and sleeve are matched parts. If necessary to replace, replace as an assembly only.

e. Lubricate and install the O-ring (23) on the transfer sleeve (22) and install the sleeve in the manifold.

f. Attach the plunger (15) to the door selector spool (8) and pin (14).

g. Lubricate and install the O-ring (12) on the door solenoid (11).

h. Lubricate the door solenoid (11) threads and plunger return spring (13) and insert the plunger (15); then install the solenoid over the spring and plunger. Screw the solenoid into the manifold. Do not over-tighten the solenoid, but tighten securely by hand. Safety the solenoid to the adjacent Power Pack mounting lug.

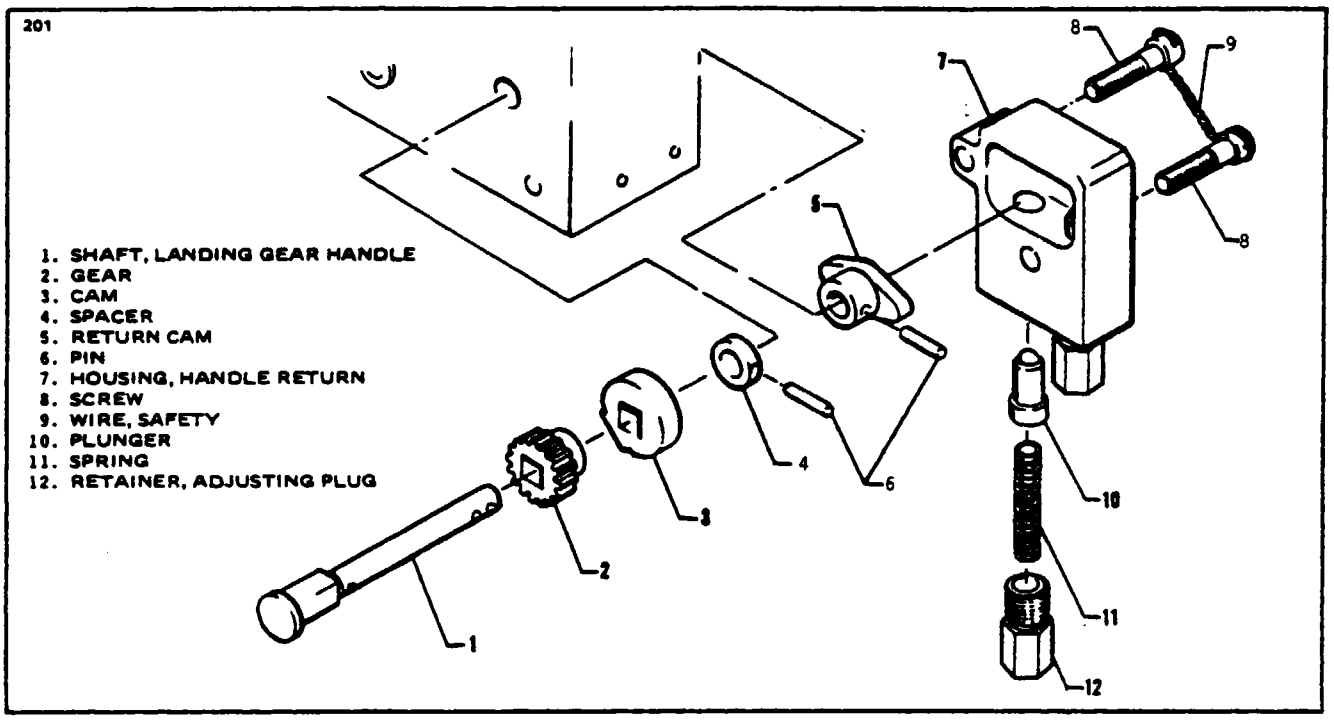

Figure 6-7. Power Pack Handle Release (Ozone)

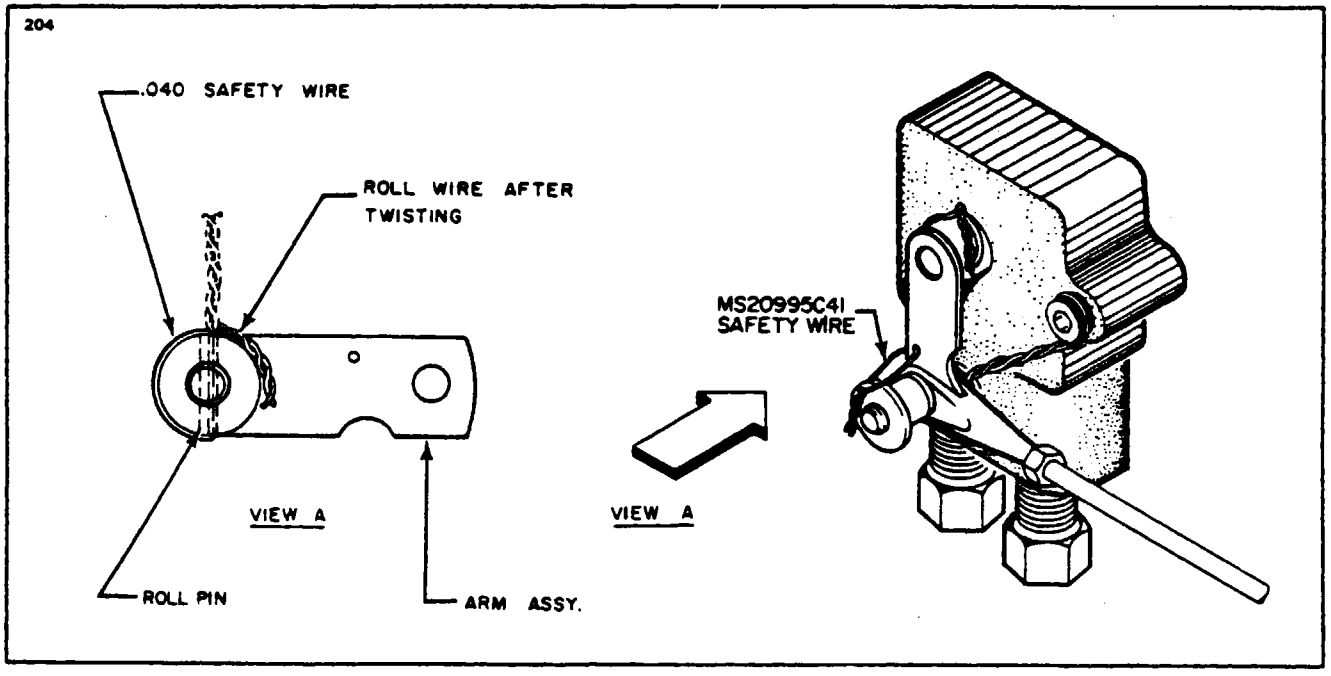

Figure 6-8. Safetying Control Arms (Ozone)

6-41. ASSEMBLY OF POWER PACK HANDLE-RELEASE MECHANISM. (Refer to Figure 6-7.)

a. If the landing gear handle shaft (1) or gear (2) was removed, the parts must be indexed and assembled as shown in Figure 6-9.

b. Lubricate the shaft (1); install the cam (3) and spacer (4) on the shaft, and insert the shaft into the Power Pack.

c. Install the return cam (5) with the roll pin (6). Both sides of the cam surfaces are identical. Check the landing gear handle shaft for freedom of movement in the Power Pack. Check for slight endplay in the shaft. If shaft binds, remove the cam and lap inside boss of cam to obtain slight endplay in the shaft with the cam installed.

d. Install the handle-release housing and safety the attaching screws. Check the landing gear shaft for freedom of movement.

e. Install the Power Pack control arm on the end of the shaft with the arm pointing down. Align the holes between the shaft and the arm assembly and install the roll pin. Install .040 safety wire through the roll pin and around half of the arm. Roll the twisted end of the safety wire around the other half of the arm assembly. (Refer to Figure 6-8.)

NOTE

Do not install the plungers, springs, and hex-head retainers (adjusting plugs) at this time.

6-42. INSTALLATION OF MANIFOLD. (Refer to Figure 6-6.)

a. Lubricate and install the O-rings (23) on the seven transfer tubes (22).

b. Insert the transfer tubes into the Power Pack body.

c. Install the time-delay valve plunger (3) in the manifold. The plunger must move freely in the manifold without binding.

d. Mate the manifold to the Power Pack body, using care to prevent damage to the O-rings on the transfer tubes. Align the dowel pin on the Power Pack with the dowel hole in the manifold.

NOTE

When installing the manifold, time the landing gear assembly to the rack on the selector spool as shown in Figure 6-9. Refer to the following steps if binding exists.

e. Install the four manifold attaching bolts (29) and washers (28). Torque the screws to 35 inch-pounds and safety. Do not over-torque the screws, as this will cause binding in the movement of the landing gear handle.

f. Lubricate and install the two O-rings on the time-delay valve retainer. (Refer to Figure 6-5.)

g. Lubricate and insert the larger spring and spacer in the body through the reservoir.

h. Lubricate and insert the ball and smaller spring in the time-delay valve retainer (ball next to the top of the retainer).

i. Lubricate threads on the time-delay valve retainer and install the retainer in the body through the reservoir. Do not over-tighten the time-delay valve retainer as this will cause the landing gear selector to bind in the manifold. After tightening the time-delay valve retainer, check for freedom of movement of the landing gear selector spool.

j. Thoroughly lubricate the handle return springs and plungers, and install them in the housing with the hex-head retainers. Do not tighten the retainers at this time.

k. Lubricate and install the two O-rings on the landing gear handle release plunger and insert the plunger in the body.

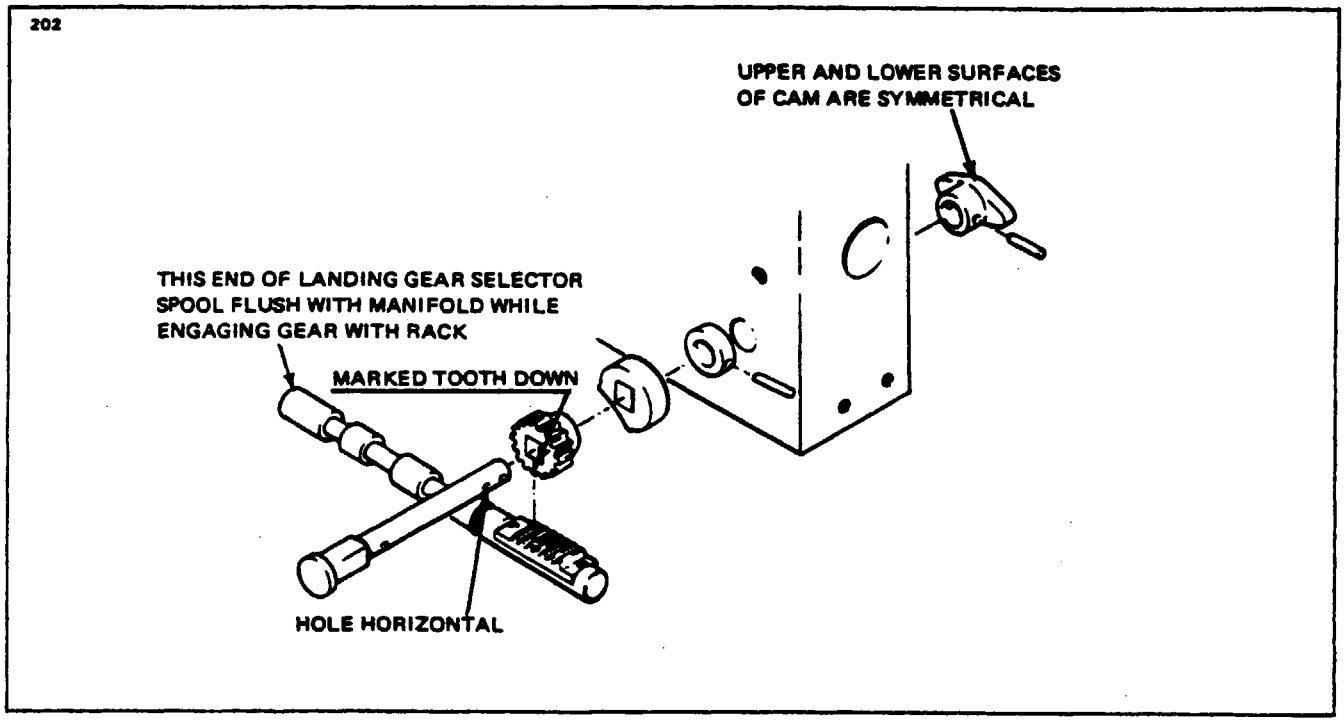

Figure 6-9. Timing of Selector Spool (Ozone)

l. Lubricate the landing gear handle release spring, guide, retainer and nut and install them in the body. Tighten the retainer (adjusting plug) until approximately .312 inch of thread is engaged.

m. Install the gear and rack protective cover. Safety the attaching screws.

6-43. INSTALLATION AND ADJUSTMENT OF INBOARD GEAR DOORS SOLENOID VALVE SWITCH. (Refer to Figure 6-6.)

a. Install the landing gear up-down switch and the switch attaching bracket. Note that the washers are used between the bracket and Power Pack. The switch bracket has slotted holes for switch adjustment.

b. Adjust the top edge of the bracket (44) to be flush with the edge of the manifold assembly. Tighten the screws securely and safety wire.

c. Adjust the switch to the full up position in the slot provided.

d. Move the selector spool to the gear up position, and check that the switch retraction arm does not bottom on the switch body.

e. Move the selector spool to the gear up and gear down positions to ensure that the switch actuates on and off.

f. If removed, install the terminal strip and place the capacitor along side the strip. Connect electrical wires to the terminal strip and ground; clamp wires to the door solenoid valve.

NOTE

Electrical wires are coded with color stripes. Disregard the color of wire terminals or plastic sleeving. If the color codes are matched when the wires are installed, the wires will be connected correctly.

g. Continue reassembly of the Power Pack after pressure adjustments have been completed.

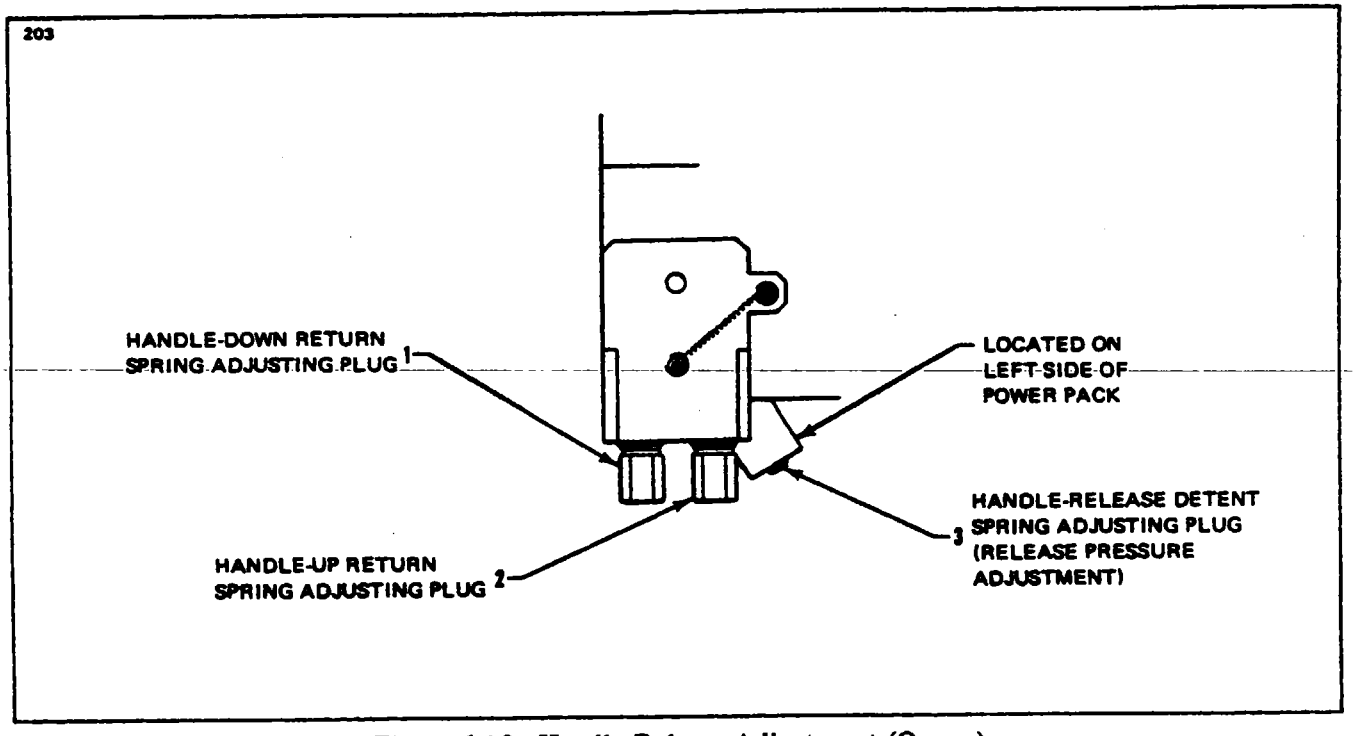

Figure 6-10. Handle Release Adjustment (Ozone)

6-44. POWER PACK BENCH TEST ADJUSTMENT. After completion of the overhaul, the Power Pack may be bench tested prior to installation in the airplane using a hydraulic test unit or similar test equipment. This procedure requires a minimum of test equipment for testing the Power Pack.

a. Use only clean hydraulic fluid (MIL-H-5606).

b. Minimum equipment needed is as follows:

1. Test unit pump or hand pump with a 3000 psi capacity.
2. One hydraulic pressure gauge of 3000 psi capacity.
3. One hydraulic pressure gauge of 150 psi capacity.

c. Connect the test pressure hose to the pressure inlet port of the Power Pack. The 3000 psi gauge is to operate off of the pressure line.

d. Connect the suction hose to the suction port of the Power Pack.

e. If a vent hose is part of the test unit, connect it to the vent port at the top of the Power Pack.

f. Cap all other fittings with high pressure caps.

NOTE

For control of the door valve solenoid, it will be necessary to fabricate an electric harness as shown in Figure 6-29. This harness, when connected to a 24-volt battery, will allow control of the electrical current to the door valve solenoid, permitting operation of the door hydraulic circuits.

6-45. ADJUSTMENT OF HANDLE-RELEASE MECHANISM. (Refer to Figure 6-10.) The following procedure outlines preliminary adjustments to set the handle-release detent spring load and the handle-return spring load adjusting plugs in approximately their correct positions before installing the Power Pack in the airplane. After it has been installed, the system must be checked and final adjustments, if needed, made at that time. Use a .078 inch punch to rotate the gear handle shaft.

a. Ascertain that the handle-return spring adjusting plugs (1 and 2) are not tightened, and the detent spring adjusting plug (3) has been screwed in until approximately .312 inch of thread is engaged. The spring, however, must not bottom out.

b. Place the handle in the up-detent position; then hold it beyond this position (in overtravel).

c. Tighten the forward handle-return spring adjusting plug (2) until the handle just starts to move out of overtravel; then loosen the adjusting plug one turn.

d. Place the handle in the down-detent position; then hold it beyond this position (in overtravel).

e. Tighten the aft handle-return spring adjusting plug (1) until the handle just starts to move out of overtravel; then loosen the adjusting plug one turn.

f. Place the handle in the up-detent position and tighten the handle-release detent spring adjusting plug (3) until the spring bottoms out; then back the adjusting plug out two turns.

g. The handle must hold in both detent positions, but must return with a positive snap when manually released from either detent position. Connect a spring scale to the arm and pull fore and aft, perpendicular to the centerline of the arm, to determine that it will leave the detent at a force of 9 + 1-2 pounds. The handle-release detent spring adjusting plug (3) may be readjusted slightly more or less than the two turns specified in the preceding step, if necessary. When proper detent adjustment has been obtained, tighten the nuts and safety.

6-46. ADJUSTMENT OF HAND PUMP RELIEF VALVE.

a. With the landing gear handle in either the up or down position, apply test unit pressure very slowly until fluid flows from the hand pump relief valve.

CAUTION

It is very important that the test unit be operated very slowly as pressure is being increased to bleed the hand pump relief valve. If the test pump is operated rapidly, damage to the valve can occur as air permits parts to "slam" against each other.

b. Bleed air from the Power Pack by cracking the cap on the door-open fitting.

c. Adjust the retainer plug at the top of the valve until the valve cracks at the pressure stated in Table VI-I (using a slow flow). Bleed pressure by cracking the cap on the door-open fitting after each adjustment.

d. Safety wire the hand pump relief valve to the time-delay valve.

6-47. ADJUSTMENT OF MAIN RELIEF VALVE.

a. Loosen the locknut and back out the adjusting screw at the top of the valve until very little load is left on the spring.

b. With the landing gear handle in the down position, apply pressure until fluid flows from the main relief valve.

c. Adjust the main relief valve until the valve cracks at the pressure stated in Table VI-I. Bleed pressure after each adjustment by cracking the cap on the door-open fitting. Tighten the locknut on the adjusting screw after obtaining the correct adjustment.

6-48. ADJUSTMENT OF PRIORITY VALVE.

a. Place the landing gear handle in the up position and remove the cap from the gear up fitting.

b. Apply pressure and note the priority valve cracking pressure by observing the pressure gauge when fluid first starts to flow from the gear-up port.

c. Adjust the priority valve to crack at the pressure stated in Table VI-I. Bleed pressure after each adjustment by cracking the cap on the door-open fitting.

d. Disconnect the test unit and cap all open fittings.

6-49. ADJUSTMENT OF DOOR SOLENOID VALVE.

a. Remove the caps from the door-open and door-close fittings on Power Pack.

b. Connect a test harness to the electrical plug of the Power Pack and power source. (A test harness may be fabricated as shown in Figure 6-29.)

c. With the test harness switch in the OFF position, and the landing gear handle in either the up or down neutral position, apply pressure and note that fluid flows from the door-open fitting.

d. With the test harness switch in either the gear up or down position, the landing gear handle in either the up or down neutral position, apply pressure and note that fluid flows from the door-close fitting.

e. Disconnect the test equipment and cap all open fittings.

6-50. TESTING DOOR VENT VALVE.

a. Remove the cap from the door-open fitting on the Power Pack, and attach the pressure hose from the hand pump with the 150 psi pressure gauge to the door-open fitting.

b. Slowly apply 50 psi pressure and check to see that fluid seeps from the door vent valve.

c. Increase the pressure to 150 psi minimum and check to see that the door vent valve shuts off fluid flow. (Slow decrease in pressure from the valve leakage is normal.)

d. Relieve pressure by cracking the hose fitting from the hand pump.

e. Disconnect the test unit and cap all open fittings.

6-51. ASSEMBLY OF POWER PACK. (Refer to Figure 6-5.) To complete the reassembly of the Power Pack, proceed as follows:

a. Install the reservoir cover attaching center stud (21). Install with the longer threaded end down, and screw in until the stud bottoms in the reservoir.

b. Install the plate (80) and spacer (83) of the center stud. Safety wire the main relief valve locknut (2) to the screened standpipe (67).

c. Lubricate and install the O-ring (84) in the groove of the reservoir cover.

d. Position the cover (55) on the reservoir, aligning the index marks on the reservoir and cover.

CAUTION

Be sure that the large O-ring is positioned properly in the groove of the reservoir cover, and that the O-ring is not pinched as the cover is installed.

e. Lubricate and install the O-ring of the cover (86) at the top of the cover and around the center stud (21).

f. Install the cover retaining nut (85) (cap nut), tighten and safety.

6-52. TESTING RESERVOIR FOR LEAKAGE.

a. Remove the filler and drain tee or drain fitting as applicable, and attach a test unit and 150 psi gauge to the filler or drain port.

b. Remove the cap from the reservoir vent fitting at the top of the reservoir and operate the test pump until the reservoir is completely full, as indicated by fluid coming out of the fitting.

c. Cap the reservoir vent fitting.

d. Operate the test hand pump very slowly until the pressure gauge indicates 15 psi maximum.

e. Check for leaks. There should be no external leakage.

f. Crack the vent fitting to release pressure, remove the test equipment, drain the reservoir and cap the fittings.

g. The hydraulic Power Pack is now ready to be installed in the airplane.

6-53. HYDRAULIC POWER PACK (WIEBEL TOOL).

6-54. REMOVAL OF POWER PACK. (See Paragraph 6-20.)

6-55. DISASSEMBLY OF POWER PACK. (Refer to Figure 6-12.) After the Power Pack has been removed from the airplane and all ports are capped or plugged, spray with cleaning solvent (Federal Specifications P-S-661, or equivalent) to remove all accumulated dust or dirt. Dry with filtered compressed air. To disassemble the unit, proceed as follows:

a. Remove wire (37), nut (35), reservoir cover (36) and "O" ring (47). Cover is a snug fit on reservoir. Use a soft mallet and tap cover lightly to remove.

b. Remove deflector plate (107) and snap ring (44) from center stud (41) and remove baffle plate (45) from reservoir. Drain remaining hydraulic fluid from reservoir.

c. Remove the reservoir (46) and "O" ring (104). Reservoir is a snug fit in body (67) and requires a hard pull to disengage from body.

d. Remove center stud (41) and "O" ring (40).

NOTE

All electrical wires are color coded. Disregard color of wire terminals. If colored wires are matched when wires are re-installed, the wires will be connected correctly.

e. Remove screws (46), washers (45), switch assembly (44) and insulating plate (43). Switch will remain hanging from the electrical wires. (Refer to Figure 6-13.)

f. Remove plastic strap (48) attaching the electrical wires to the door solenoid valve (11) and remove the safety wire (47) from the door solenoid valve. (Refer to Figure 6-13.)

g. Disconnect electrical wires of switch and door solenoid from terminal block (80).

h. Remove four bolts (42) attaching the manifold assembly. Work the manifold assembly from the Power Pack, taking care to prevent the loss of the transfer sleeves (36) between the manifold and the Power Pack. (Refer to Figure 6-13.)

i. Remove the five transfer sleeves (36) from the manifold (35). (Refer to Figure 6-13.)

NOTE

As the manifold is separated from the Power Pack body, the teeth on the landing gear selector spool become disengaged from the gear. This will permit the selector spool to move. DO NOT remove the selector spool from its position. Never move it to a position that is more than flush (±.06 inch) with the manifold body at the end opposite the selector spool teeth. If moved beyond this position, an "O" ring will become caught and the selector spool will then be difficult to remove.

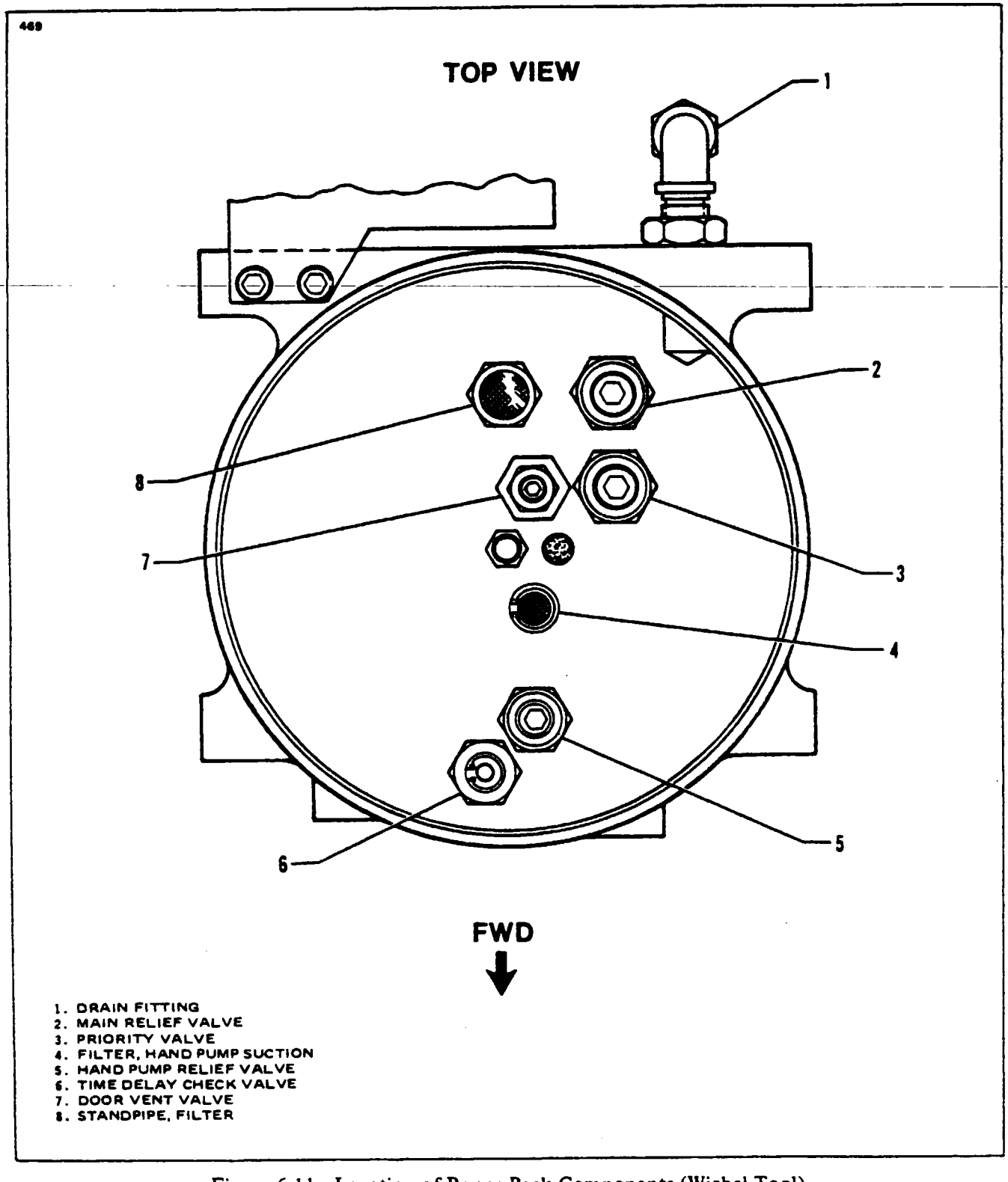

Figure 6-11. Location of Power Pack Components (Wiebel Tool)

1323

NOTE

The shaded parts, poppet (6) and poppet seat (7) are matched parts and must be replaced as an assembly.

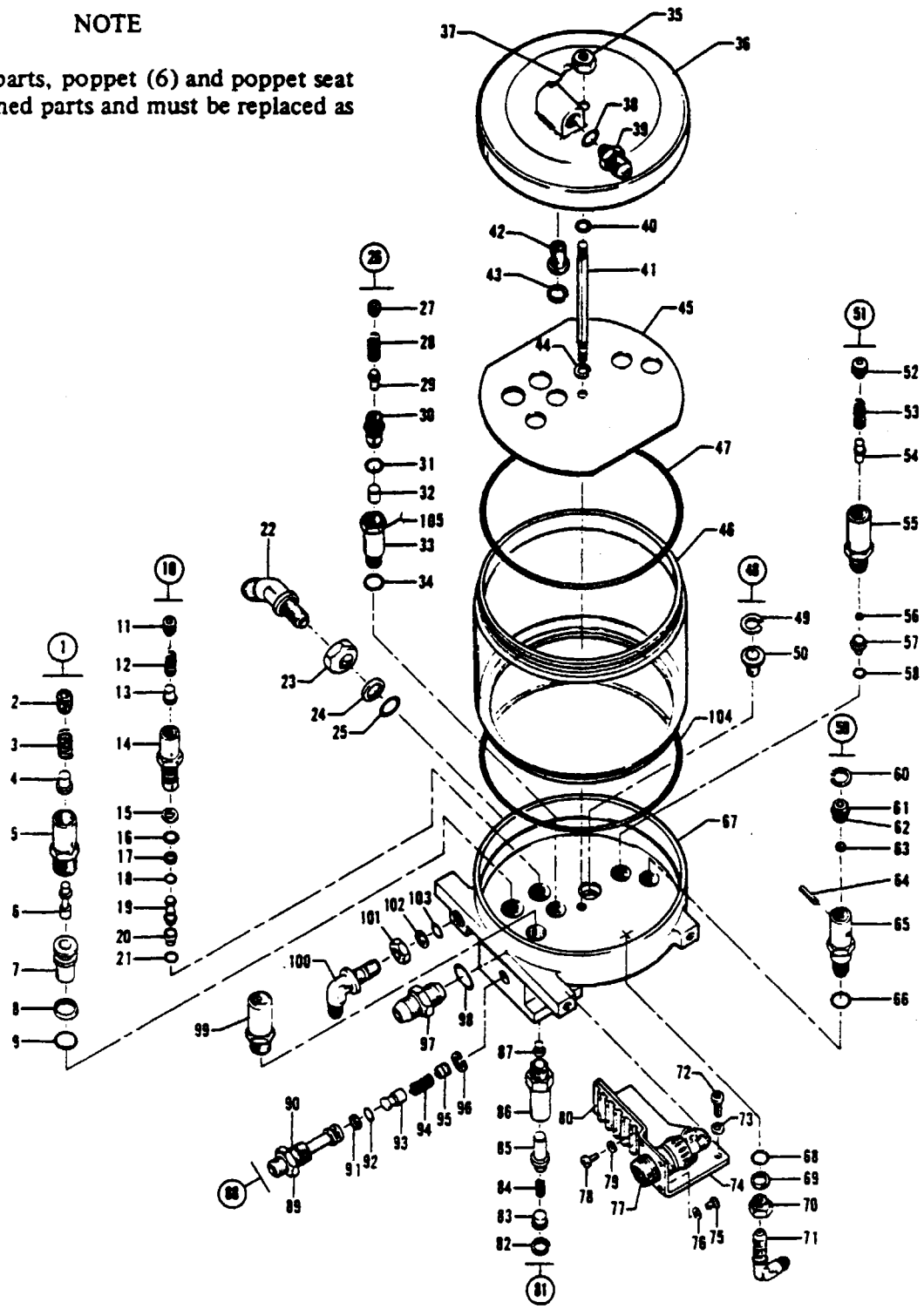

Figure 6-12. Hydraulic Power Pack (Wiebel Tool)

1. MAIN RELIEF VALVE
2. ADJUSTING SCREW
3. SPRING
4. BUTTON
5. BODY, RELIEF VALVE
6. POPPET
7. POPPET SEAT
8. BACK UP
9. "O" RING
10. PRIORITY VALVE
11. ADJUSTING SCREW
12. SPRING
13. BUTTON
14. BODY, PRIORITY VALVE
15. BACK UP
16. "O" RING
17. BACK UP
18. "O" RING
19. POPPET
20. POPPET SEAT
21. "O" RING
22. FITTING
23. NUT
24. BACK UP
25. "O" RING
26. DOOR VENT VALVE
27. ADJUSTING SCREW
28. SPRING
29. STEM
30. RETAINER
31. "O" RING
32. PISTON
33. BODY, VENT VALVE
34. "O" RING
35. NUT
36. COVER, RESERVOIR
37. WIRE, SAFETY
38. "O" RING
39. FITTING
40. "O" RING
41. CENTER STUD
42. FILTER, VENT
43. SNAP RING
44. SNAP RING
45. BAFFLE PLATE
46. RESERVOIR
47. "O" RING
48. FILTER, HAND PUMP SUCTION
49. SNAP RING
50. FILTER, HAND PUMP
51. HAND PUMP RELIEF VALVE
52. ADJUSTING SCREW
53. SPRING
54. STEM
55. BODY, SECONDARY RELIEF VALVE
56. BALL
57. SEAT
58. "O" RING
59. CHECK VALVE, TIME DELAY
60. SNAP RING
61. "O" RING
62. SEAT
63. BALL
64. PIN
65. BODY, CHECK VALVE
66. "O" RING
67. BODY
68. "O" RING
69. BACK UP
70. NUT
71. FITTING
72. BOLT
73. WASHER
74. BRACKET
75. BOLT
76. WASHER
77. PLUG, ELECTRICAL
78. SCREW
79. WASHER
80. TERMINAL BLOCK
81. SPRING CARTRIDGE
82. SNAP RING
83. BUTTON
84. SPRING
85. PLUNGER
86. BODY, HANDLE RELEASE
87. SCREW, STOP
88. HAND PUMP CHECK VALVE
89. FITTING
90. "O" RING
91. BACK UP
92. "O" RING
93. POPPET
94. SPRING
95. GUIDE
96. SNAP RING
97. FITTING
98. "O" RING
99. STANDPIPE FILTER
100. FITTING
101. NUT
102. BACK UP
103. "O" RING
104. "O" RING
105. WIRE SAFETY
106. BRACKET ASSEMBLY
107. DEFLECTOR PLATE

Figure 6-12. Hydraulic Power Pack (Wiebel Tool) (cont.)

6-56. DISASSEMBLY OF MANIFOLD. (Refer to Figure 6-13.)

a. Remove the door solenoid (12) by unscrewing it from the manifold (35). Use proper wrench. Remove the plunger return spring (14).

b. Remove the pin (16), and then remove the plunger (15) from the spool (10) by carefully pulling it from the manifold.

c. Using a hook formed from a brass welding rod, withdraw the transfer valve sleeve (7) from the manifold, by inserting the hook into one of the oil holes in the transfer valve sleeve.

NOTE

Be sure that the end of the hook is not over .06 inches long and use the hook with care to prevent scratching the bore in the manifold. The sleeve will be hard to withdraw due to "O" ring friction.

d. Remove screw (5), spring (3) and the plunger (2) using a small wooden dowel inserted in the center of the plunger. The plunger should slide out very easily.

e. Remove the landing gear selector spool (19) by grasping the rack (teeth) end of the spool and pulling it from the manifold.

NOTE

DO NOT bend the selector spool, pull straight out. The landing gear selector spool (19), time delay plunger (2) and the manifold (35) are matched, lapped parts. If it is necessary to replace any of these three parts, replace them as an assembly only.

f. Remove the landing gear handle-release retainer (26), spring (25) and plunger (23) from the manifold. The end of the plunger has a ball which should remain in the plunger. If it does not, remove the ball from the manifold.

g. Remove the caps and the fittings and wash the manifold in cleaning solvent (Federal Specification P-S-661 or equivalent) and dry with filtered, compressed air. Be sure internal passages are clean. Reinstall caps on fittings.

6-57. DISASSEMBLY OF HAND PUMP SUCTION SCREEN. (Refer to Figure 6-12, item 48.)

a. Remove the suction screen (50) by removing the snap ring (49).

6-58. DISASSEMBLY OF HAND PUMP RELIEF VALVE. (Refer to Figure 6-12, item 51.)

a. Remove the adjusting screw (52) at the top of the hand pump relief valve.
b. Remove the hand pump relief valve body (55) by unscrewing from the body (67).
c. Remove the spring (53) and the stem (54) from body (55).
d. Remove ball (56).
e. Use a brass hook and remove the seat (57) from the body (67). Be careful not to score the bore.
f. Remove the "O" ring (58) from the bottom of the cavity.

1324

NOTE

THE SHADED PARTS, TIME DELAY PLUNGER (2), LANDING GEAR SELECTOR SPOOL (19) AND MANIFOLD (35) ARE MATCHED, LAPPED PARTS. IF IT IS NECESSARY TO REPLACE ANY OF THESE PARTS, REPLACE THEM WITH A MATCHED ASSEMBLY CONTAINING (2), (19) AND (35). SHADED PARTS, TRANSFER VALVE SLEEVE (7), AND SPOOL (10) ARE ALSO MATCHED AND LAPPED PARTS AND MUST BE REPLACED BY A MATCHED ASSEMBLY CONTAINING (7) AND (10).

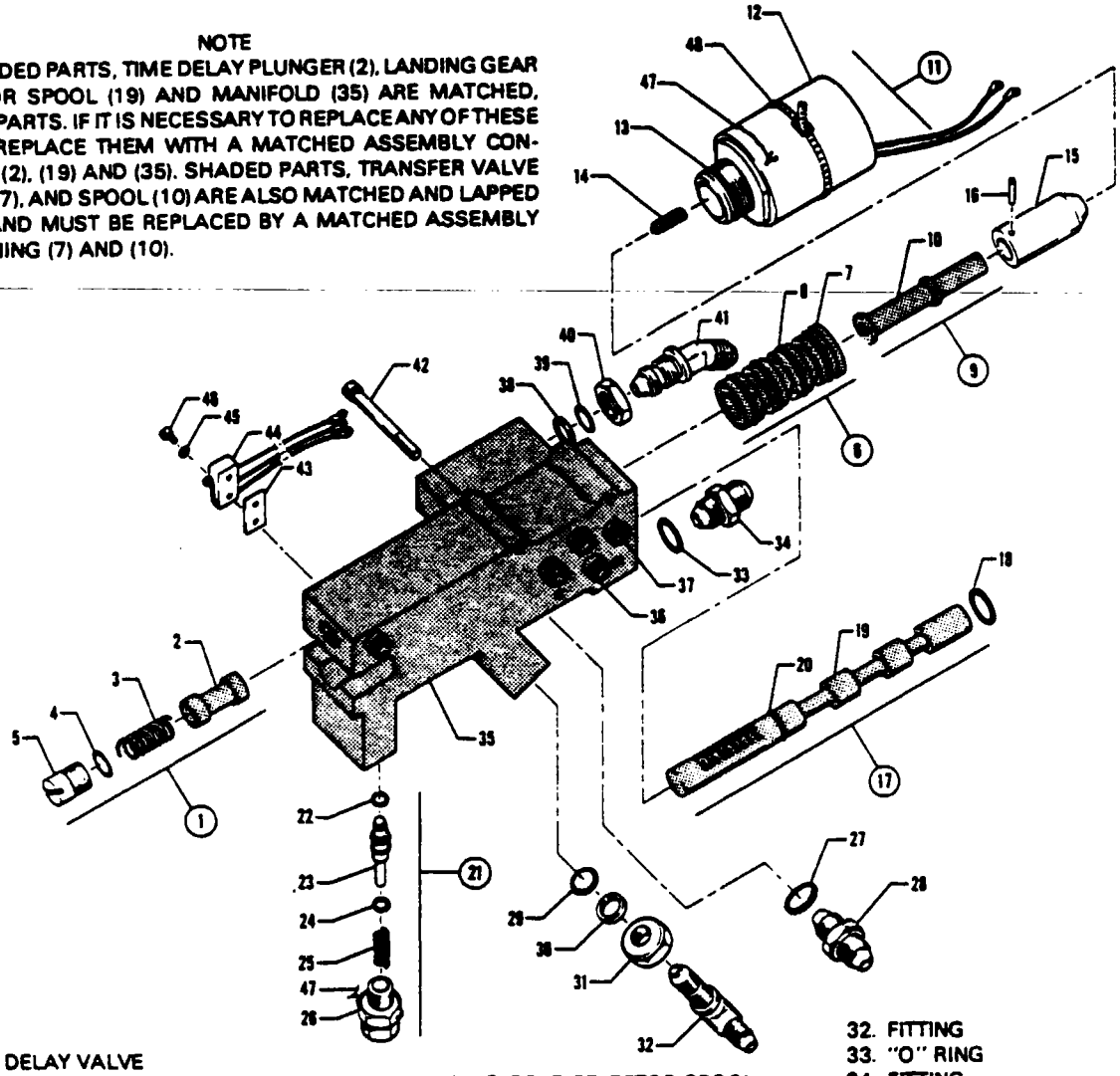

1. TIME DELAY VALVE
2. PLUNGER, TIME DELAY
3. SPRING
4. "O" RING
5. SCREW
6. TRANSFER VALVE
7 SLEEVE, TRANSFER VALVE
8. "O" RING, SLEEVE
9. DOOR SELECTOR SPOOL
10. SPOOL, DOOR SELECTOR
11. DOOR SOLENOID VALVE ASSEMBLY
12. SOLENOID, DOOR
13. "O" RING, SOLENOID
14 SPRING, PLUNGER RETURN
15. PLUNGER
16. PIN
17. LANDING GEAR SELECTOR SPOOL
18. "O" RING
19. SPOOL, LANDING GEAR SELECTOR
20. "O" RING
21. HANDLE DETENT ASSEMBLY
22. "O" RING
23. PLUNGER
24. "O" RING
25. SPRING
26. RETAINER
27. "O" RING
28. FITTING
29. "O" RING
30. BACK UP
31. NUT
32. FITTING
33. "O" RING
34. FITTING
35. MANIFOLD ASSEMBLY
36. SLEEVE, TRANSFER
37. "O" RING
38. "O" RING
39. BACK UP
40. NUT
41. FITTING
42. BOLT
43. INSULATING PLATE
44. SWITCH ASSEMBLY
45. WASHER
46. SCREW
47 WIRE, SAFETY
48. STRAP, PLASTIC

Figure 6-13. Power Pack Manifold (Wiebel Tool)

6-59. DISASSEMBLY OF MAIN RELIEF VALVE. (Refer to Figure 6-12, item 1.)

a. Remove the adjusting screw (2) at the top of the main relief valve.
b. Remove relief valve body (5) with spring (3) and button (4).
c. Remove the poppet (6) from the poppet seat (7).
d. Use a brass hook, not over .125 inches long, and pull the poppet seat (7) up and out of the body (67). Hook through the holes in the side of the seat and use care not to damage the bore in the body (67).
e. Reassemble poppet (6) into poppet seat (7). The poppet and poppet seat are matched parts.

6-60. DISASSEMBLY OF PRIORITY VALVE. (Refer to Figure 6-12, item 10.).

a. Remove the adjusting screw (11) at the top of the priority valve.
b. Remove priority valve body (14) with spring (12), button (13) and poppet (19).
c. Use a brass hook and remove the poppet seat (20) from the body (67). Be careful not to score the bore.
d. Remove the "O" ring (21) from the bottom of the cavity.

6-61. DISASSEMBLY OF HAND PUMP CHECK VALVE. (Refer to Figure 6-12, item 88.)

a. Remove the fitting (89) from the body (67).
b. Remove the snap ring (96) from fitting (89).
c. Remove guide (95), spring (94) and poppet (93).

6-62. DISASSEMBLY OF STANDPIPE-FILTER. (Refer to Figure 6-12.)

a. Remove the standpipe-filter (99) from body (67).

6-63. DISASSEMBLY OF VENT FILTER. (Refer to Figure 6-12.)

a. Remove snap ring (43) and pull out filter (42).

6-64. DISASSEMBLY OF DOOR VENT VALVE. (Refer to Figure 6-12, item 26.)

a. Remove adjusting screw (27) from top of retainer (30).
b. Remove vent valve body (33) from body (67).
c. Remove spring (28) and stem (29).
d. Cut wire (105) and remove retainer (30) from vent valve body (33).
e. Remove "O" ring (31) and piston (32).

6-65. DISASSEMBLY OF TIME DELAY CHECK VALVE. (Refer to Figure 6-12, item 59.)

a. Remove check valve body (65) from body (67).
b. Remove snap ring (60).
c. Using a brass hook, pull out seat (62).
d. Remove ball (63).

NOTE

A pin (64) is pressed into the body (65); do not remove. If it is necessary to replace any of these parts, replace as an assembly only.

6-66. DISASSEMBLY OF LANDING GEAR SPRING CARTRIDGE ASSEMBLY. (Refer to Figure 6-12, item 81.)

a. Remove the two handle release bodies (86) from body (67).
b. Remove snap rings (82), buttons (83), springs (84) and plungers (85).

CAUTION

Take care when removing snap rings (82), cartridges are spring loaded.

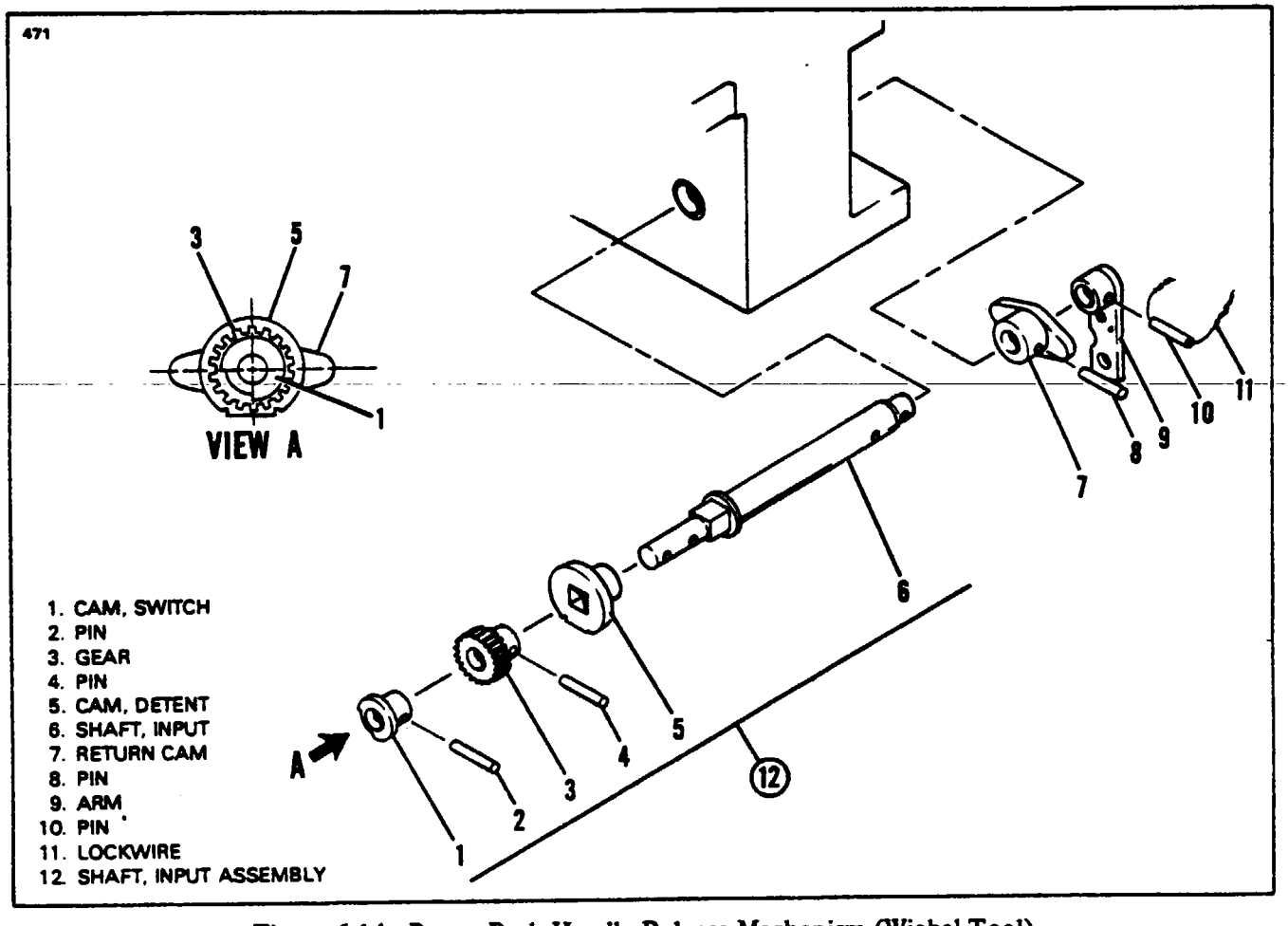

Figure 6-14. Power Pack Handle-Release Mechanism (Wiebel Tool)

6-67. DISASSEMBLY OF LANDING GEAR HANDLE RELEASE MECHANISM. (Refer to Figure 6-14.)

a. Remove lockwire (11).
b. Using a punch, drive the roll pin (10) out of the arm (9) and remove arm.
c. Using a punch, drive the roll pin (8) out of the return cam (7), and remove return cam.
d. Pull the input shaft assembly (12) from Power Pack.

6-68. CLEANING, INSPECTION AND REPAIR OF POWER PACK.

a. Discard all old "O" rings and gaskets.
b. Remove the line fitting caps and wash all parts in dry cleaning solvent (Federal Specification P-S-661, or equivalent) and dry with filtered compressed air.
c. Inspect all parts for scratches, scores, chips, cracks and indications of excess wear.
d. Repairs are limited to replacement of parts, "O" rings and gaskets.
e. The parts catalog should be used to obtain the proper parts for the Power Pack being serviced.

6-69. ASSEMBLY OF POWER PACK.

a. Use new "O" rings and gaskets during assembly.
b. Lubricate all "O" rings with petrolatum per VV-P-236 or equivalent during assembly.
c. Lubricate all threaded surfaces on the various valves in the Power Pack with MIL-G-7711 grease or equivalent before installing.

6-70. ASSEMBLY OF TIME DELAY CHECK VALVE. (Refer to Figure 6-12, item 59.)

a. Install ball (63) into check valve body (65).

b. Lubricate and install the "O" ring (61) in the seat (62).

c. Install seat (62) into check valve body (65) and secure with snap ring (60).

d. Lubricate threads, install "O" ring (66) on the valve body (65) and install the assembly into the body (67). Torque to 45 inch-pounds.

6-71. ASSEMBLY OF DOOR VENT VALVE. (Refer to Figure 6-12, item 26.)

a. Install the piston (32) into the vent valve body (33).

b. Lubricate and install the "O" ring (31) on the retainer (30) screw retainer into the valve body (33), tighten and secure with wire (105).

c. Install stem (29), spring (28) and adjusting screw (27) into the retainer (30). Install adjusting screw (27) flush.

d. Lubricate threads, install "O" ring (34) on the valve body (33) and install assembly into body (67). Torque to 55 inch-pounds.

6-72. ASSEMBLY OF VENT FILTER. (Refer to Figure 6-12.)

a. Install vent filter (42) into reservoir cover (36) and secure with snap ring (43).

6-73. ASSEMBLY OF STANDPIPE-FILTER. (Refer to Figure 6-12.)

a. Install standpipe-filter (99) into body (67). Torque to 55 inch-pounds.

6-74. ASSEMBLY OF HAND PUMP CHECK VALVE. (Refer to Figure 6-12, item 88.)

a. Install poppet (93), spring (94) and guide (95) into fitting (89) and secure with snap ring (96).

b. Lubricate threads, install "O" ring (90), back up (91) and "O" ring (92) on the fitting (89) and install assembly into body (67). Torque to 55 inch-pounds.

6-75. ASSEMBLY OF PRIORITY VALVE. (Refer to Figure 6-12, item 10.)

a. Lubricate and install the "O" ring (18) and the back up (17) on the poppet (19) and insert the poppet into the priority valve body (14).

b. Lubricate "O" ring (21) and install into the body (67).

c. Inspect the poppet seat (20) for a sharp seating edge. Lap as required to obtain a good, sharp seating edge. Push the poppet seat into the valve body (14) and install assembly into body (67). Torque to 70 inch-pounds.

d. Install button (13) and spring (12) and secure with adjusting screw (11). The adjusting screw provides adjustment for the priority valve. Install flush at this time.

6-76. ASSEMBLY OF MAIN RELIEF VALVE. (Refer to Figure 6-12, item 1.)

a. Inspect the poppet (6) and the poppet seat (7) for pitting or score marks. The two parts are matched parts. If either or both are damaged, replace as an assembly only.

b. Lubricate and install the "O" ring (9) and back up ring (8) on the poppet seat (7); insert the poppet (6) into the seat (7) and install the assembly into the body (67).

c. Lubricate threads and install relief valve body (5) into the body (67). Torque to 70 inch-pounds.

d. Install button (4) and spring (3) into the relief valve body (5) and secure with adjusting screw (2). The adjusting screw provides adjustment for the main relief valve. Install flush at this time.

6-77. ASSEMBLY OF HAND PUMP RELIEF VALVE. (Refer to Figure 6-12, item 51.)

a. Lubricate and install "O" ring (58) into the body (67).

b. Inspect the seating surface of the seat (57). Seating edge has to be sharp, lap if necessary to obtain a clean, sharp edge.

c. Drop ball (56) into the cavity of the hand pump relief valve body (55) and install seat (57) into the body (55), trapping the ball between the two parts.

d. Lubricate threads and install assembly into the body (67). Torque to 70 inch-pounds.

e. Insert the stem (54) and the spring (53) into the valve body (55) and install adjusting screw (52). The adjusting screw provides adjustment for the hand pump relief valve. Install flush at this time.

6-78. ASSEMBLY OF HAND PUMP SUCTION SCREEN. (Refer to Figure 6-12, item 48.)

a. Install the filter (50) into the body (67) and secure with snap ring (49).

6-79. ASSEMBLY OF RESERVOIR. (Refer to Figure 6-12.)

a. Install center stud (41) into body (67). Torque to 45 inch-pounds.

b. Lubricate "O" ring (47) and "O" ring (104) and install on reservoir (46).

c. Push reservoir (46) into body (67).

d. Drop baffle plate (45) into reservoir (46) and secure by placing snap ring (44) onto center stud (41).

e. Slide deflector plate (107) over center stud (41).

f. Lubricate "O" ring (40) and install onto center stud (41).

6-80. ASSEMBLY OF MANIFOLD. (Refer to Figure 6-13.)

a. Lubricate and install the "O" ring (20) on the landing gear selector spool (19), and the "O" ring (18) into the manifold (35) at the opposite end.

NOTE

The landing gear selector spool, time delay valve plunger and manifold are matched, lapped parts. If necessary to replace, replace as an assembly only.

b. Insert the selector spool (19) into the manifold (35) from the landing gear handle end of the manifold. Insert only until the taper of the selector spool is protruding out the manifold end, approximately .06 inches.

CAUTION

If the selector spool is not protruding .06 inches out of the manifold opposite the rack when installing into the body (67) (see Figure 6-12), the gear will not be engaged in its proper position. Also, do not move the selector spool more than .12 inches out of the manifold opposite the rack. "O" ring (18) could be caught and damaged, and would have to be replaced by a new "O" ring (18).

c. Check that the landing gear selector spool (17) slides freely.

d. Inspect the door solenoid spool (10) for freedom of movement within the transfer valve sleeve (7).

NOTE

The spool (10) and the transfer valve sleeve (7) are matched, lapped parts. If necessary to replace, replace as an assembly only.

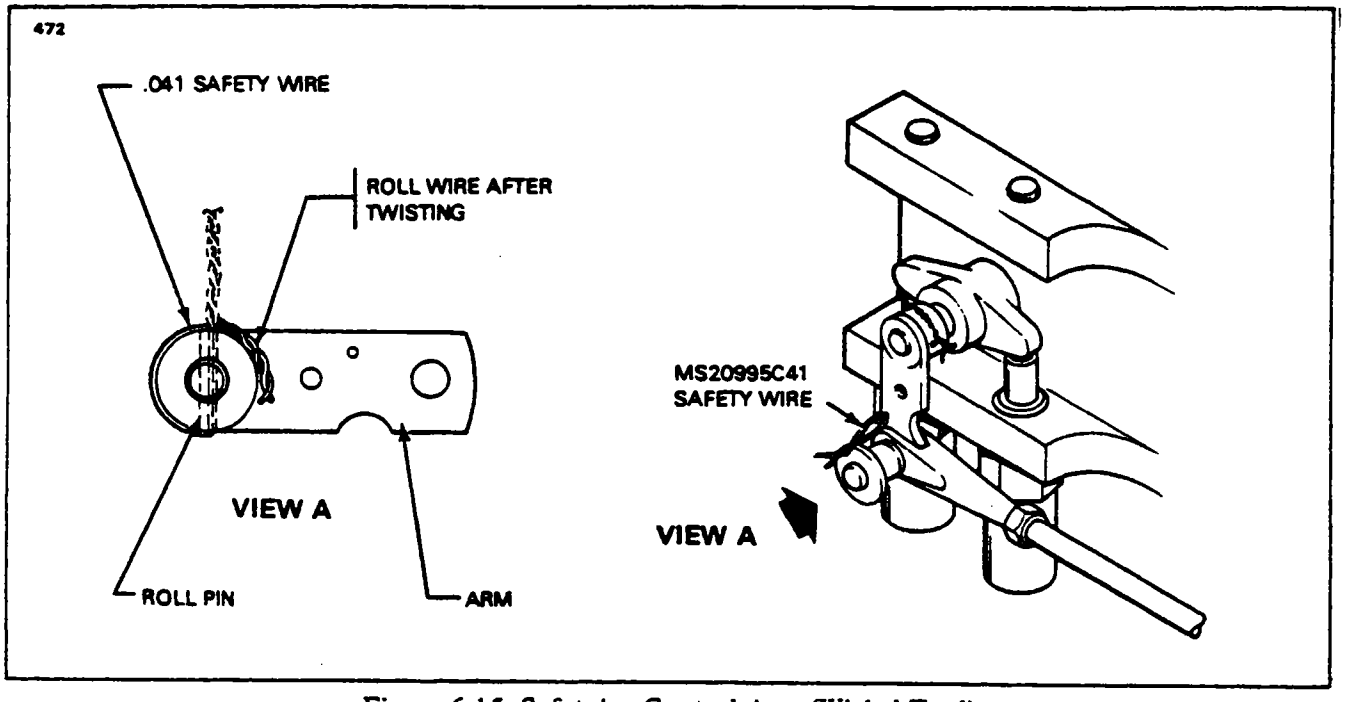

Figure 6-15. Safetying Control Arm (Wiebel Tool)

e. Lubricate "O" rings (8) and install on transfer valve sleeve (7).

f. Install transfer valve sleeve (7) into manifold (35).

g. Attach the plunger (15) to the door selector spool (10) with a pin (16) and install into the transfer valve sleeve (7).

h. Lubricate "O" ring (13) and install on solenoid (12).

i. Lubricate the door solenoid (12) threads, insert the plunger return spring (14) into the plunger (15) cavity and screw assembly into the manifold (35). Torque to 70 inch-pounds.

j. Install time delay plunger (2) and spring (3) into manifold (35).

k. Lubricate "O" ring (4) and install onto screw (5) and screw assembly into manifold (35). Screw (5) to be flush with outside of manifold (35).

6-81. ASSEMBLY OF POWER PACK HANDLE RELEASE MECHANISM. (Refer to Figure 6-14.)

a. If the switch cam (1), the gear (3) and the detent cam (5) was removed from the input shaft (6), then the parts must be assembled and indexed as shown in Figure 6-14, View "A."

b. Lubricate the input shaft (6), slide detent cam (5) and gear (3) into place and secure gear (3) with roll pin (4).

c. Slide switch cam (1) onto input shaft (6) and secure with roll pin (2). Install assembly into Power Pack body.

d. Install the return cam (7) and secure with roll pin (8). Check the landing gear shaft for freedom of movement in the Power Pack body. Check for slight end play between the input shaft and the Power Pack body. If shaft binds, remove return cam (7), lap face on return cam boss and reinstall return cam.

e. Install the Power Pack control arm (9) on the end of the shaft with the arm pointing down. Align the holes between the shaft and the arm assembly and install the roll pin (10). Install .041 safety wire (11) through the roll pin and around half of the arm. Pull the twisted end of the safety wire around the other half of the arm assembly. (Refer to Figures 6-14 and 6-15.)

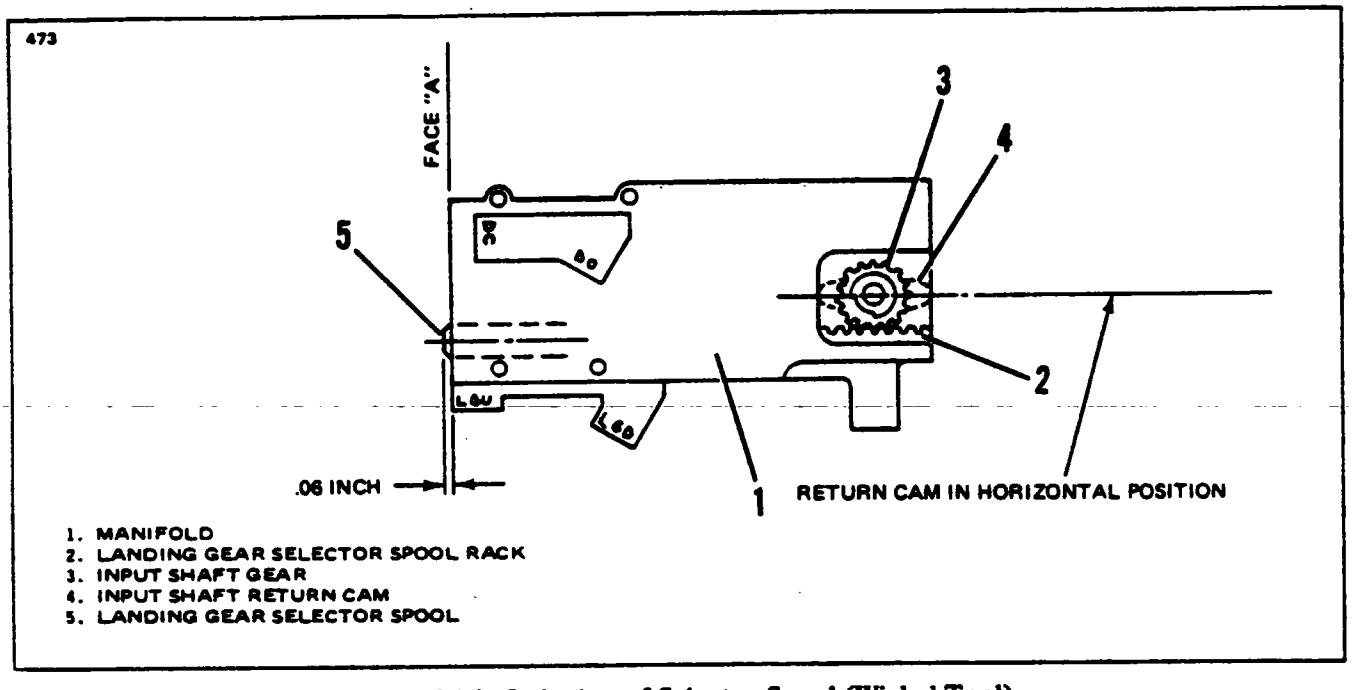

Figure 6-16. Indexing of Selector Spool (Wiebel Tool)

6-82. INSTALLATION OF MANIFOLD. (Refer to Figure 6-13.)

a. Lubricate the "O" rings (37) and install on the five transfer sleeves (36).

b. Insert the transfer sleeves (36) into the manifold (35).

c. Mate the manifold (35) to the Power Pack body, using care to prevent damage to the "O" rings on the transfer sleeves.

NOTE

When mating the manifold with the Power Pack body, index the landing gear selector spool rack with the input shaft gear as shown in Figure 6-16. With landing gear selector spool (5) protruding .06 inches from face "A" of manifold (1) and the input shaft return cam (4) in the horizontal position, tooth of input shaft gear (3) will match with toothspace in the landing gear selector spool rack (2).

d. Install the four manifold attaching bolts and torque to 35 inch-pounds. Do not over torque bolts as this will cause binding of the landing gear selector spool (17).

e. Lubricate "O" ring (22) and "O" ring (24) and install on plunger (23).

f. Install plunger (23) and lubricated spring (25) into manifold (35).

g. Lubricate threads of retainer (26), install into manifold (35). Torque to 25 inch-pounds and safety wire retainer (26) to manifold (35) using wire (47).

6-83. INSTALLATION AND ADJUSTMENT OF INBOARD GEAR DOORS SWITCH. (Refer to Figure 6-13.)

a. Install switch assembly (44) with insulating plate (43) between switch and manifold (35) and secure with washers (45) and screws (46). Tighten screws lightly.

b. Move the selector spool to the gear up and down position a couple of times to insure proper actuating of switch from "on" to "off." Torque switch screws to 20 inch-pounds.

c. Safety wire solenoid (12) to bracket (74) (see Figure 6-12) using safety wire (47).

d. Connect the electrical wires from switch to the terminal block (80) (see Figure 6-12) and secure to solenoid (12) using plastic strap (48).

NOTE

Electrical wires are color coded. Disregard the color of the wire terminals. If the colors are matched when installing the wires, the wires will be connected correctly.

e. (Refer to Figure 6-12.) Install plungers (85), springs (84) and button (83) into the handle release bodies (86) and retain with snap rings (82).

f. (Refer to Figure 6-12.) Install the handle release assemblies (81) in the body (67). Install assemblies loose, they will be adjusted later.

6-84. POWER PACK BENCH TEST ADJUSTMENT. After completion of the overhaul, the Power Pack may be bench tested prior to installation in the airplane using a hydraulic test unit or similar test equipment. This procedure requires a minimum of test equipment for testing the Power Pack.

a. Use only clean hydraulic fluid per MIL-H-5606.

b. Minimum equipment needed is as follows:

1. Test unit pump and hand pump with a 2500 PSI capacity.
2. One hydraulic pressure gauge of 2500 PSI capacity.
3. One hydraulic pressure gauge of 200 PSI capacity.

c. Connect the test pressure hose to the pressure inlet port of the Power Pack. The 2500 PSI gauge is to operate off the pressure line.

d. Connect the suction hose to the suction port of the Power Pack.

e. If a vent hose is part of the test unit, connect it to the vent port at the top of the reservoir cover. DO NOT plug vent port.

f. Cap all other fittings with high pressure caps.

NOTE

For the control of the door valve solenoid, it will be necessary to fabricate an electric harness as shown in Figure 6-29. This harness, when connected to a 24-volt battery will allow control of the electrical current to the door valve solenoid, permitting operation of the hydraulic door circuits.

6-85. ADJUSTMENT OF HANDLE-RELEASE MECHANISM. (Refer to Figure 6-17.) The following procedure outlines the adjustments to set the handle release cartridges and stops in the correct position before installing the Power Pack into the airplane.

a. Rotate the input shaft into the "gear up" detent position and adjust stop screw (1) to allow a slight overtravel past the detent position.

b. Rotate the input shaft into the "gear down" detent position and adjust stop screw (8) to allow a slight overtravel past the detent position.

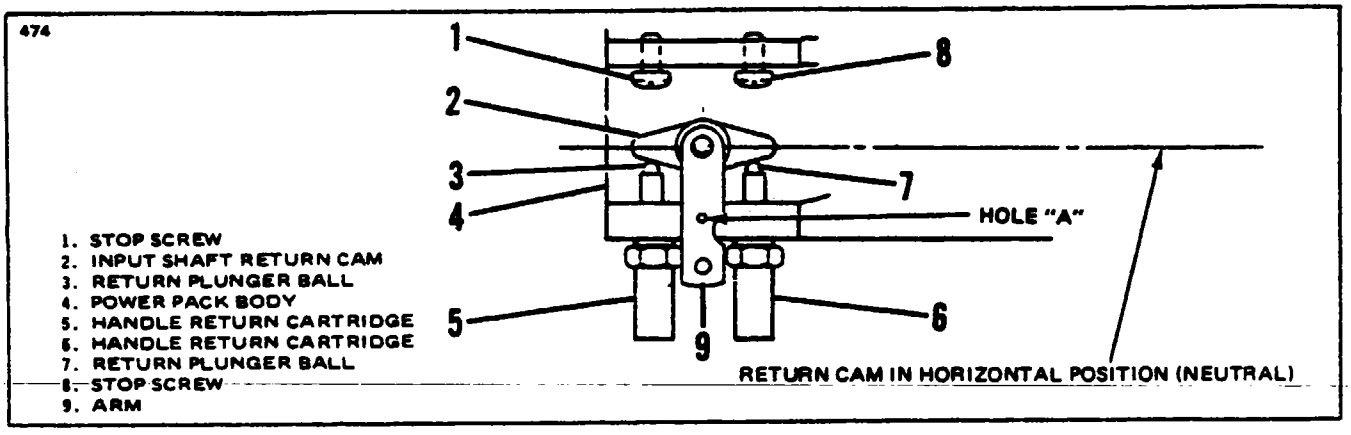

Figure 6-17. Handle Release Adjustment (Wiebel Tool)

c. Rotate the input shaft to the neutral position, which will bring the input shaft return cam (2) to the horizontal position.

d. Hold the input shaft return cam (2) in the horizontal (neutral) position by inserting a .125 dia. drill or punch through hole in the arm (9) and into rigging hole in body (4). Rigging hole is noted as hole "A" in Figure 6-17. Adjust handle return cartridges (5) and (6) in such a manner that their return plunger balls (3) and (7) touch the surface of the input shaft return cam (2) slightly.

CAUTION

Remove drill or punch from rigging hole "A."

e. The detent must hold in both detent positions and must return with a positive snap when manually released from either detent position.

6-86. ADJUSTMENT OF HAND PUMP RELIEF VALVE. (Refer to Figure 6-12, item 51.)

a. With the input shaft in either the "gear up" or "gear down" position, apply hand pump pressure very slowly until fluid flows from the hand pump relief valve.

CAUTION

It is important that the hand pump be operated slowly as pressure is being increased to bleed the hand pump relief valve.

b. Bleed air from the Power Pack by cracking the cap on the "door open" fitting.

c. Adjust the adjusting screw (52) at the top of the valve until the valve cracks at the maximum required pressure as given in Table VI-II, pumping slowly. Bleed pressure by cracking the cap on the "door open" fitting after each adjustment.

6-87. ADJUSTMENT OF MAIN RELIEF VALVE. (Refer to Figure 6-12, item 1.)

a. With the input shaft in the "gear up" or "gear down" position, apply pressure until fluid flows from the main relief valve.

b. Adjust the adjusting screw (2) at the top of the main relief valve until the valve cracks at the required pressure given in Table VI-II. Bleed pressure after each adjustment by cracking the cap on the "door open" fitting.

6-88. ADJUSTMENT OF PRIORITY VALVE. (Refer to Figure 6-12, item 10.)

a. Place the input shaft in the "gear up" position and remove cap from the "gear up" fitting.

b. Apply pressure and note the priority valve cracking pressure by observing the pressure gauge when fluid first starts to flow from the "gear up" port.

c. Adjust the adjusting screw (11) until the valve cracks at the required pressure given in Table VI-II. Bleed pressure after each adjustment by cracking cap on "door open" fitting.

d. Disconnect the test unit and cap all open fittings.

6-89. ADJUSTMENT OF DOOR SOLENOID VALVE. (Refer to Figure 6-13, item 11.)

a. Remove the caps from the "door open" and "door closed" fittings on Power Pack.

b. Connect a test harness to the electrical plug of the Power Pack and to power source. (Test harness may be fabricated as shown in Figure 6-29.)

c. With the test harness switch in the "OFF" position and the input shaft in either the "up neutral" or "down neutral" position, apply pressure and note that fluid flows from the "door open" fitting.

d. With the test harness switch in either the "gear up" or "gear down" position, the input shaft in either the "up neutral" or "down neutral" position, apply pressure and note that fluid flows from the "door closed" fitting.

e. Disconnect the test equipment and cap all open fittings.

6-90. ADJUSTMENT OF DOOR VENT VALVE. (Refer to Figure 6-12, item 26.)

a. Remove the cap from the "door open" fitting on the Power Pack and attach the pressure hose from the hand pump with the 200 PSI pressure gauge to the "door open" fitting.

b. Slowly apply pressure to see that fluid seeps from the door vent valve.

c. Adjust the adjusting screw (27) so that fluid flows from the vent valve from 0 to 100 PSI (see Table VI-II).

d. Increase pressure to 150 psi max. and check to see that the door vent valve is shut off. If pressure falls below 100 PSI, fluid must resume flowing from door vent valve (also see Table VI-II).

e. Relieve pressure by cracking the hose fitting from the hand pump.

f. Disconnect the test unit and cap all open fittings.

6-91. ASSEMBLY OF POWER PACK. (Refer to Figure 6-12.) To complete the reassembly of the Power Pack, proceed as follows:

a. Install the reservoir cover (36) on the reservoir (46) and secure with nut (35) and safety wire nut (35) to reservoir cover (36) by using safety wire (37). Torque nut (35) to 35 inch-pounds.

NOTE

When positioning reservoir cover (36) make sure that the vent fitting (39) points to the left when Power Pack is installed in the airplane. Also when installing reservoir cover (36), be sure large "O" ring (47) is not being pinched.

6-92. TESTING RESERVOIR FOR LEAKAGE. (Refer to Figure 6-12.)

a. Remove the drain fitting (100) as applicable, and attach hand pump with 200 PSI gauge to the drain port.

b. Remove the cap from the reservoir vent fitting (39) at the top of the reservoir and operate the hand pump until the reservoir is completely full, as indicated by fluid coming out of vent fitting (39).

c. Cap the reservoir vent fitting (39).

d. Operate the test hand pump to raise the pressure in the reservoir until the pressure gauge indicates 50 PSI maximum.

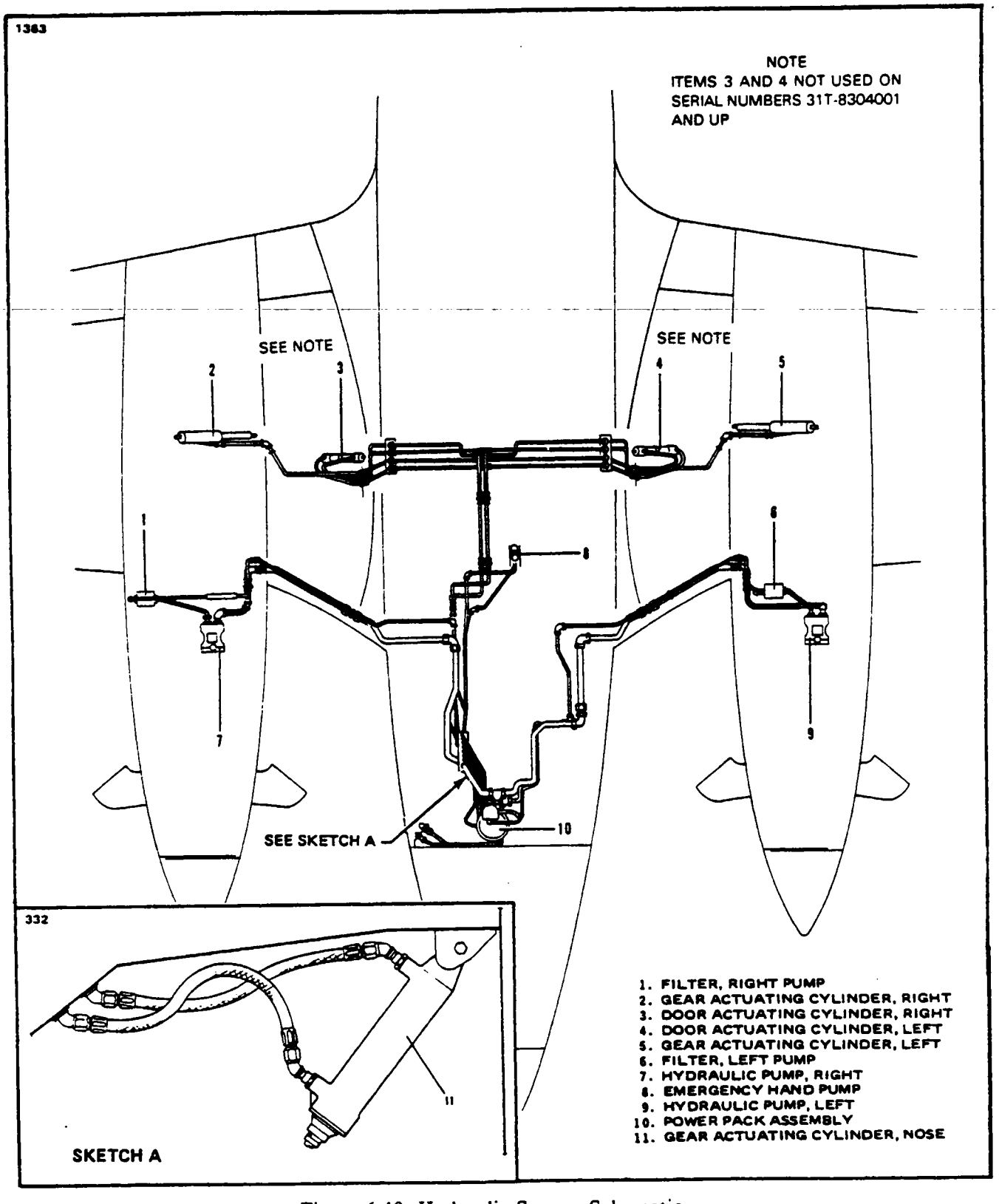

Figure 6-18. Hydraulic System Schematic

e. Check for leaks, there should be no external leakage.

f. Crack the vent fitting to release the pressure, remove the test equipment, drain the reservoir and cap the fittings.

g. The hydraulic Power Pack is now ready to be installed in the airplane.

6-93. INSTALLATION OF POWER PACK. (Refer to Figure 6-3.)

a. Reach through the nose baggage compartment upper, aft access panel, and position the Power Pack within the mounting brackets (9). Install the bolts (15) to secure it in place. Safety wire the bolts (15).

b. Uncap and connect the various hydraulic lines to the Power Pack.

c. Connect the electrical connector (7) to the aft end of the Power Pack and the landing gear selector cable to the selector arm.

d. Replace the return air duct muffler, combustion air blower and appropriate hoses from right side of fuselage nose section.

e. Fill the Power Pack in accordance with Paragraph 6-98.

f. Bleed the system in accordance with Paragraph 6-99.

g. Replace the access panels on both sides of the airplane nose section and in the nose baggage compartment.

h. Check the system operation in accordance with Paragraph 6-9.

6-94. LANDING GEAR SELECTOR HANDLE MECHANISM.

6-95. OPERATION OF GEAR SELECTOR HANDLE MECHANISM. The operation of the landing gear selector handle must give the feel of having made a positive engagement with a detent. With the selector handle in the up or down position and in a detent, a force of 3-1/2 to 6 pounds applied perpendicular to the centerline of the handle at the centerline of the knob will be required to move the handle from the detent and return it to the neutral position. To check the operation of the gear selector handle mechanism, place the airplane on jacks (refer to Jacking, Section II) and operate the landing gear selector handle through its entire travel, both up and down.

6-96. INSPECTION OF LANDING GEAR SELECTOR HANDLE.

a. Ascertain that the handle does not contact the ends of the slot in the instrument panel when actuated to the extremes of its travel.

b. Inspect and be certain there is adequate clearance between the selector gear mechanism and wiring harness which runs laterally across the aircraft.

c. Determine that locknuts are securely tightened and that all grommets have been properly installed.

d. Check security of control cable connections to the actuator arms on both the Power Pack and selector handle.

6-97. ADJUSTMENT OF LANDING GEAR SELECTOR HANDLE.

a. Ascertain that the selector arm on the lever assembly is safety wired as shown in Figure 6-8 or Figure 6-15.

b. Depress the button on the solenoid lock to allow the handle to travel freely between the two neutral positions.

c. To check the handle release mechanism, disconnect the control cable from the arm at the Power Pack. Connect a spring scale to the arm and pull both fore and aft, perpendicular to the centerline of the arm to determine that it will leave the detent at a force of 9 + 1-2 pounds. If it does not release at the required force, adjust the mechanism in accordance with instructions given in Paragraph 6-45 for Ozone units or Paragraph 6-85 for Wiebel Tool units.

d. Position the control arm on the Power Pack in neutral and the selector handle in the down neutral position. Refer to Paragraph 6-85 for a method of holding the control arm in the neutral rigging position on Wiebel Tool units.

e. Connect the terminal ends of the cable assembly to the Power Pack control arm and the selector handle.

f. The terminal ends can be adjusted to obtain the neutral position in both the control arm and selector handle.

NOTE

Whenever the cable assembly is removed from the airplane and then reinstalled, be sure to seal the cable where it passes through the pressure bulkhead. Refer to Section IV for sealing.

g. Recheck that the handle will leave the detent at 3-1/2 to 6 pounds.

6-98. FILLING HYDRAULIC RESERVOIR. (Refer to Section II, Servicing Hydraulic Reservoir.)

6-99. BLEEDING THE HYDRAULIC SYSTEM.

a. Jack the airplane as described in Section II.
b. Ascertain that the reservoir is full.
c. Connect a hydraulic test unit to the airplane as described in Paragraph 6-8.
d. Cycle the landing gear system through several cycles.
e. Check that hydraulic reservoir is full.
f. Disconnect the hydraulic test unit as described in Paragraph 6-17.
g. Ascertain that the landing gear selector handle is in the down neutral position, and that the landing gear is down and locked.
h. Remove the airplane from jacks.

6-100. HAND PUMP (EMERGENCY) (OZONE).

6-101. REMOVAL OF HAND PUMP.

a. Remove the pump access panel located aft of the control pedestal.
b. Disconnect the hydraulic pressure and suction lines from the forward end of the pump.
c. Remove the pump from its mounting bracket by removing attachment bolts.
d. Remove the pump from the airplane.
e. Cover the pressure and suction lines to prevent contamination.

6-102. DISASSEMBLY OF HAND PUMP. (Refer to Figure 6-19.)

a. To remove the plunger (13) and component parts, remove pin (22) and allen screws (19) allowing the bracket (18) to separate from the pump body (6).

b. Pull the plunger assembly from the pump body.

c. Slide the scraper (17) and packing gland (15) from the plunger (13).

d. To remove the check ball assembly from the plunger, remove the snap ring (7) in the end of the plunger and with a low charge of air injected into the hole in the side of the plunger, blow the check ball (10) and seat (9) from the plunger. Remove the spring (11).

e. To remove the check ball assembly located in the suction port, reach into the port with a pair of long snap ring pliers and remove the snap ring (1). With a low charge of air injected into the interior of the pump body, blow the seat (3) and check ball from the suction port. Remove the spring (5).

1068

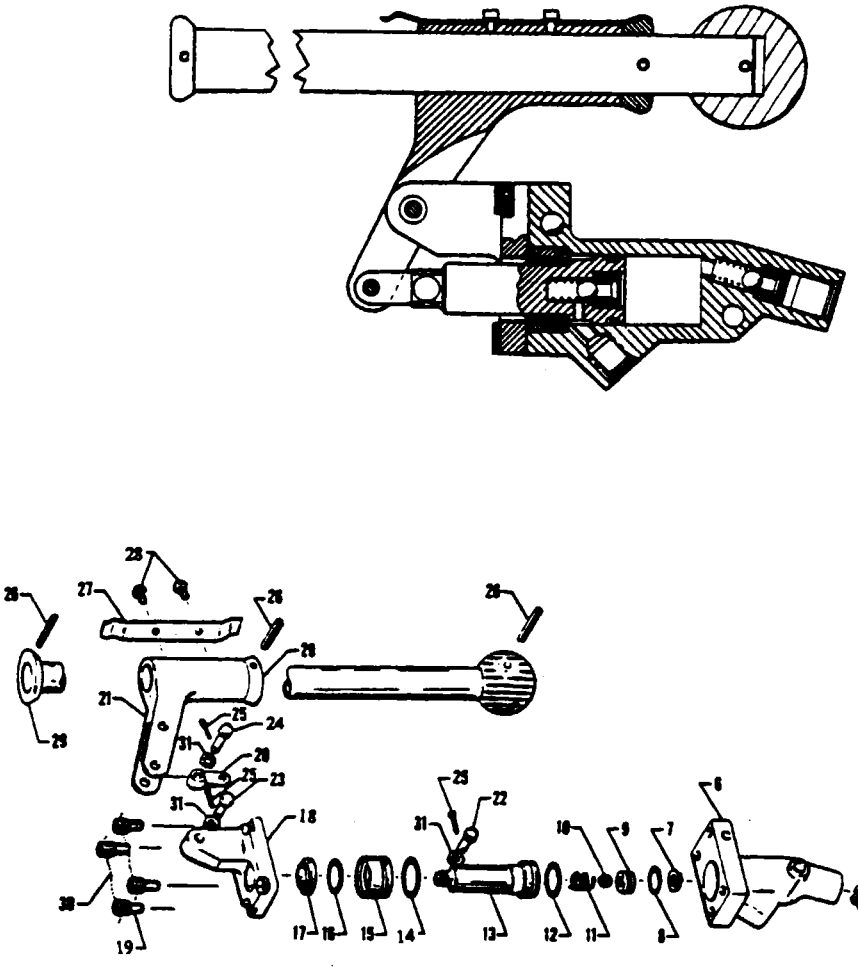

1. SNAP RING
2. O-RING PACKING
3. SEAT
4. BALL, CHECK
5. SPRING
6. BODY, PUMP
7. SNAP RING
8. O-RING PACKING
9. SEAT
10. BALL, CHECK
11. SPRING
12. O-RING PACKING
13. PLUNGER
14. O-RING PACKING
15. GLAND, PACKING
16. O-RING
17. SCRAPER
18. BRACKET
19. SCREW, ALLEN
20. LINK
21. LEVER
22. PIN, FLAT HEAD
23. PIN, FLAT HEAD
24. PIN, FLAT HEAD
25. PIN, COTTER
26. PIN, ROLL
27. SPRING
28. SCREW
29. STOP
30. SAFETY WIRE
31. WASHER

OAS 2950-9

Figure 6-19. Hand Pump (Ozone)

6-103. CLEANING, INSPECTION AND REPAIR OF HAND PUMP.

a. Clean the pump parts with a suitable solvent and dry thoroughly.

b. Inspect the pump body for scratches, burrs, etc., that could damage "O" rings and threaded areas for damage.

c. Inspect the plunger for enlarged pinhole, surface area for scratches, burrs, etc., that could damage "O" rings.

d. Inspect check balls and seats for damaged seating areas and corrosion.

e. Check general condition of remaining parts.

f. Repairs to the pump are limited to polishing out small scratches, burrs, etc., replacing "O" rings and worn or damaged parts.

6-104. ASSEMBLY OF HAND PUMP. (Refer to Figure 6-19.)

a. To install the plunger assembly, first install the check ball assembly in the plunger by placing "O" ring packing (8) on seat (9). Lubricate the seat (9) with hydraulic fluid, MIL-H-5606, and install check ball spring (11), check ball (10) and seat (9) in the end of the plunger. Install snap ring (7) to secure parts in place.

b. Install "O" ring packing (12) on the plunger.

c. Install "O" rings (14 and 16) on the exterior and in the interior of the packing gland (15).

d. Lubricate the packing gland and plunger assemblies. Slide the packing gland onto the small end of the plunger (13) with the recessed end toward the small end of the plunger and insert the plunger with the packing gland (15) into the pump body (6).

e. Position the scraper (17) on the plunger (13), with the flat end toward the gland (15), and slide it into the pump body (6).

f. Attach the bracket (18) to the pump body (6), install allen screws and safety with MS20995C20 lock wire.

g. Position link (20) and install pins (22 and 23), washers (31) and cotter pins (25).

h. To install the check ball assembly in the suction port of the pump body, install "O" ring (2) on ball seat (3). Lubricate the seat assembly with hydraulic fluid, install spring (5), check ball (4), seat (3) and secure in place with snap ring (1).

6-105. INSTALLATION OF HAND PUMP.

a. Position the hand pump on its mounting bracket and secure with bolts.

b. Connect the hydraulic pressure and suction lines to the forward end of the pump.

c. Bleed the hand pump as described in Paragraph 6-106 and test the hand pump as described in Paragraph 6-107.

d. Install access panel.

e. Ascertain that hydraulic fluid is visible through the sight gauge at the front of the Power Pack.

6-106. BLEEDING HAND PUMP. The hand pump may be purged by operating the pump until all air has been expelled from the pump. This will usually require approximately 15 cycles of the pump.

6-107. HAND PUMP TEST.

a. Ascertain that the reservoir is filled with hydraulic fluid.

b. Remove cap from door-open port and operate emergency hand pump until fluid flows from port with no evidence of air in the system. Replenish reservoir with clean hydraulic fluid as necessary to maintain fluid level.

c. After pump is primed and bled of all air, remove fitting and install 2100 psi gauge at door-open port.

d. Operate emergency hand pump very slowly until pressure on gauge stops increasing, indicating that the hand pump relief valve has opened.

CAUTION

It is very important that the hand pump be operated very slowly as pressure is being increased to bleed the hand pump relief valve. If the hand pump is operated rapidly, damage to the valve can occur as air permits parts to "slam" against each other.

Maximum indication of the gauge should be as indicated in Table VI-I. During the pumping operation, the emergency hand pump should not feel spongy in either the up or down stroke.

e. Crack the gauge in the door-open port to release pressure; remove the gauge; reinstall and cap the door-open fitting, and drain the fluid from reservoir.

6-108. HAND PUMP (EMERGENCY) (WIEBEL TOOL).

6-109. REMOVAL OF HAND PUMP. (Same as Paragraph 6-101.)

6-110. DISASSEMBLY OF HAND PUMP. (Refer to Figure 6-20.)

a. To remove the plunger (13) and component parts, remove quick click pin (14) and the four screws (25) allowing the bracket (21) to separate from the pump body (6).

NOTE

To remove the quick click pins (14), (22) and (24), use a hollow steel rod having an outside diameter of .186-.184 inches and an inside diameter (bore) of .166 inches. The inside diameter should have a minimum depth of .125 inches.

b. Pull the plunger assembly from the pump body.

c. Slide the scraper (20) and the gland (16) from the plunger (13).

d. To remove the check valve assembly from the plunger, remove the snap ring (7) from the plunger cavity and with a low charge of air injected into the hole in the side of the plunger, remove the seat (9), ball (10) and the spring (11).

e. To remove the check valve assembly located in the suction port of the pump body (6) remove the snap ring (1). Inject a low charge of air into the plunger bore in the pump body to remove the seat (3), the ball (4) and the spring (5).

6-111. CLEANING, INSPECTION AND REPAIR OF HAND PUMP. (Same as Paragraph 6-103.)

6-112. ASSEMBLY OF HAND PUMP. (Refer to Figure 6-20.) Lubricate all parts with oil per MIL-H-5606 prior to assembly.

a. Lubricate "O" ring (8) and install on seat (9).

b. Install spring (11), ball (10) and lubricated seat (9) into the plunger (13) and retain with snap ring (7).

c. Install GT-ring (12) on the plunger (13).

d. Install "O" ring (19) and back up (17) into inside groove of gland (16).

e. Install "O" ring (15) and back up (18) into outside groove of gland (16).

f. Lubricate the complete gland (16) and slide onto the plunger (13) with the recessed end on the outside.

g. Lubricate the bore of the pump body (6) and slide plunger (13) with gland (16) into the pump body (6).

h. Install the scraper (20) into the recess of gland (16) by sliding scraper over plunger (13). Tapered lip of scraper (20) to face outward.

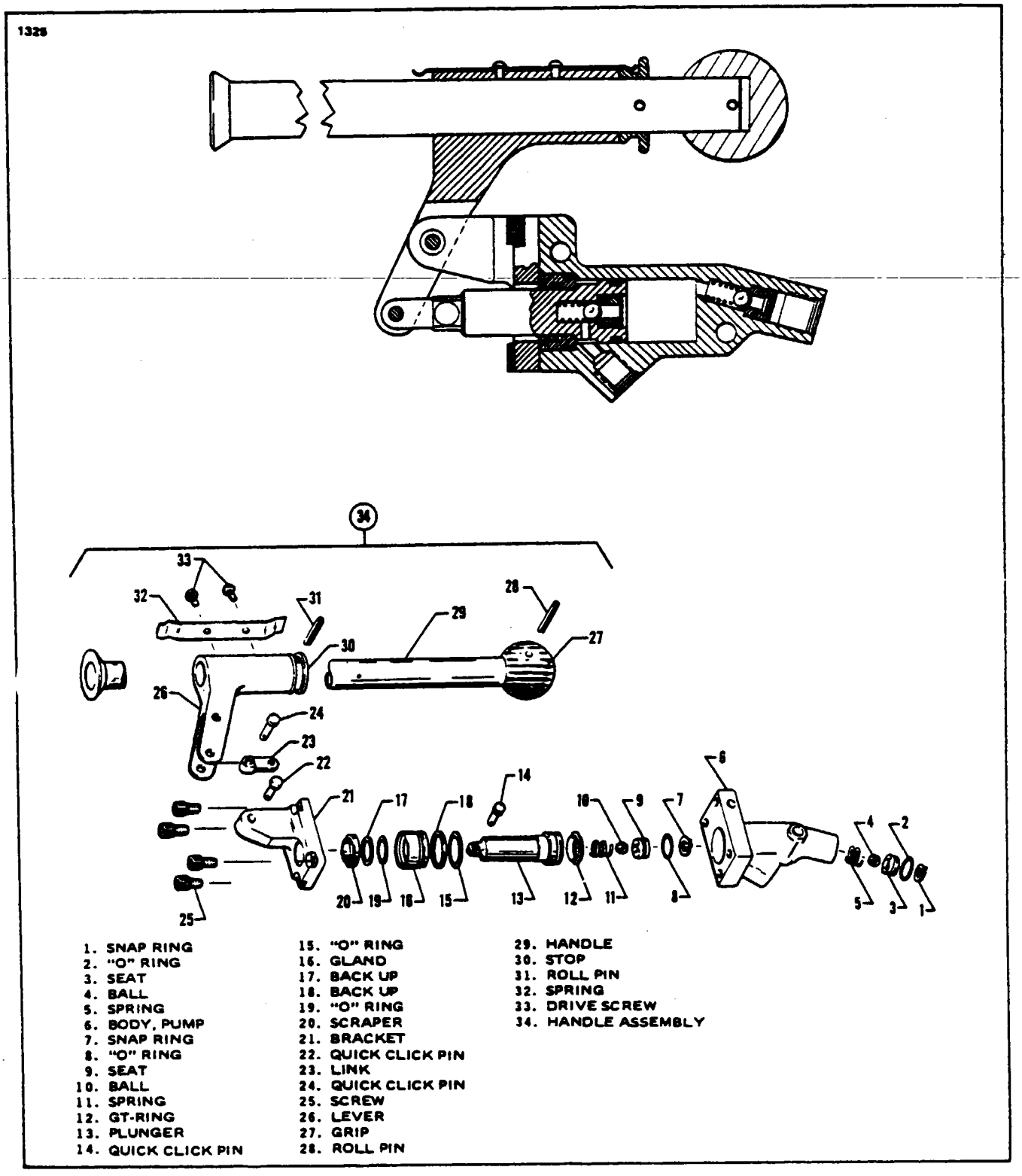

Figure 6-20. Hand Pump (Wiebel Tool)

i. Attach the bracket (21) to the pump body (6) with the four screws (25). Torque to 70 inch-pounds.

j. Position link (23) and install quick click pin (14).

k. Lubricate "O" ring (2) and install on seat (3).

l. Install spring (5), ball (4) and lubricated seat (3) into the suction port of the pump body (6) and secure with snap ring (1).

6-113. INSTALLATION OF HAND PUMP.

a. Position the hand pump on its mounting bracket and secure with bolts.

b. Connect the hydraulic pressure and suction lines to the forward end of the pump.

c. Bleed the hand pump as described in Paragraph 6-114 and test the hand pump as described in Paragraph 6-115.

d. Install access panel.

e. Ascertain that the reservoir is filled with hydraulic fluid.

6-114. BLEEDING HAND PUMP. The hand pump may be purged by operating the pump until all air has been expelled from the pump. This will usually require approximately 15 cycles of the pump.

6-115. HAND PUMP TEST.

a. Ascertain that the reservoir is filled with hydraulic fluid.

b. Remove cap from door-open port and operate emergency hand pump until fluid flows from port with no evidence of air in the system. Replenish reservoir with clean hydraulic fluid as necessary to maintain fluid level.

c. After pump is primed and bled of all air, install 3000 psi pressure gauge at door-open port.

d. Operate emergency hand pump very slowly until pressure on gauge stops increasing, indicating that the hand pump relief valve has opened.

CAUTION

It is very important that the hand pump be operated very slowly as pressure is being increased to bleed the hand pump relief valve. If the hand pump is operated rapidly, damage to the valve can occur as air permits parts to "slam" against each other.

Maximum indication of the gauge should be as indicated in Table VI-II. During the pumping operation, the emergency hand pump should not feel spongy in either the up or down stroke.

e. Crack door-open fitting to release gauge pressure. Remove gauge, cap door-open fitting, and drain fluid from reservoir.

1070

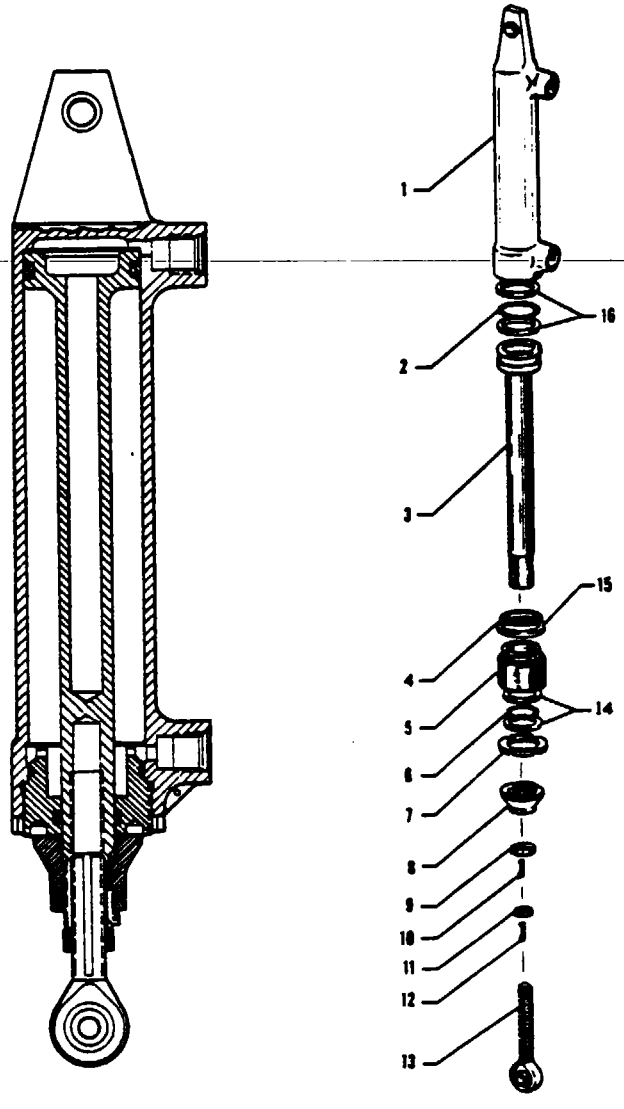

1. CYLINDER BODY
2. O-RING
3. PISTON
4. O-RING
5. GLAND
6. O-RING
7. LOCKNUT, GLAND
8. STOP
9. LOCKNUT
10. LOCK
11. LOCKNUT
12. LOCK
13. ROD END
14 BACKUP RING
15 GLYD RING
16 BACKUP RING

Figure 6-21. Nose Gear Actuating Cylinder (Ozone OAS 2923-3)

6-116. NOSE GEAR ACTUATING CYLINDER (OZONE).

6-117. REMOVAL OF NOSE GEAR ACTUATING CYLINDER.

a. Place the airplane on jacks. (Refer to Jacking, Section II.)

b. Disconnect the hydraulic lines from the actuating cylinder and cover the open line ends to prevent contamination.

c. Disconnect the cylinder operating rod end from the link assembly.

d. Disconnect the attachment end of the cylinder by removing the bolt that secures the cylinder and nose gear uplock rod.

e. Remove the cylinder from the wheel well.

6-118. DISASSEMBLY OF NOSE GEAR ACTUATING CYLINDER. (Refer to Figure 6-21.)

a. Before disassembly establish rod end engagement distance to aid in preliminary assembly of the actuating cylinder.

b. With the cylinder removed from the airplane, remove the safety wire attached to the rod end locknut (11) and lock (12). Loosen the locknut and remove the rod end (13).

c. Remove the safety wire attached to the locknut (9) of the stroke control stop and lock (10). Remove the stop (8) from the piston rod end.

d. Remove the safety wire between the cylinder body (1) and gland locknut (7). Loosen the gland locknut and with a spanner wrench remove the gland (5).

e. Draw the piston (3) from the cylinder body.

6-119. CLEANING, INSPECTION AND REPAIR OF NOSE GEAR ACTUATING CYLINDER.

a. Clean the cylinder parts with a suitable solvent and dry thoroughly.

b. Inspect the cylinder interior walls and piston exterior surfaces for scratches, burrs, corrosion, etc.

c. Inspect threaded areas for damage.

d. Inspect the rod end fitting for wear and corrosion.

e. Repairs to the cylinder are limited to polishing out small scratches, burrs, etc., and replacing parts.

6-120. ASSEMBLY OF NOSE GEAR ACTUATING CYLINDER. (Refer to Figure 6-21.)

a. Install "O" rings (2) on the body of the piston assembly (3).

b. Install "O" rings (4 and 6) on the exterior and in the interior of the packing gland (5).

c. Lubricate the piston assembly (3), interior of the cylinder body (1) and the packing gland (5) with hydraulic fluid, MIL-H-5606.

d. Slide the packing gland onto the shaft of the piston assembly.

e. Slide the piston assembly into the cylinder and with spanner wrench turn the packing gland into the cylinder to a snug fit. Install gland locknut (7) and safety to the cylinder with MS20995C32 lock wire.

f. Turn the stop (8) of the stroke control on the cylinder rod and install locknut (9) and lock (10).

g. Install the rod end (13), locknut (11) and lock (12) on the piston rod.

h. Adjust rod end (13) to preliminary length obtained before disassembly. Before securing the locknuts of the stroke control stop and rod end with MS20995C32 lock wire, ascertain that the stroke control stop and rod end fitting are properly adjusted. (Refer to Adjustment of Nose Landing Gear, Section VII.)

6-121. INSTALLATION OF NOSE GEAR ACTUATING CYLINDER.

a. Position the attachment end of the cylinder and the uplock rod end of the nose gear on mounting bracket, install attachment bolt and secure.

b. Connect the operating rod end of the cylinder to the gear link assembly.

c. Connect the hydraulic lines to the cylinder.

d. Check operation of the installation and landing gear rigging as given in Section VII.

e. Remove the airplane from jacks.

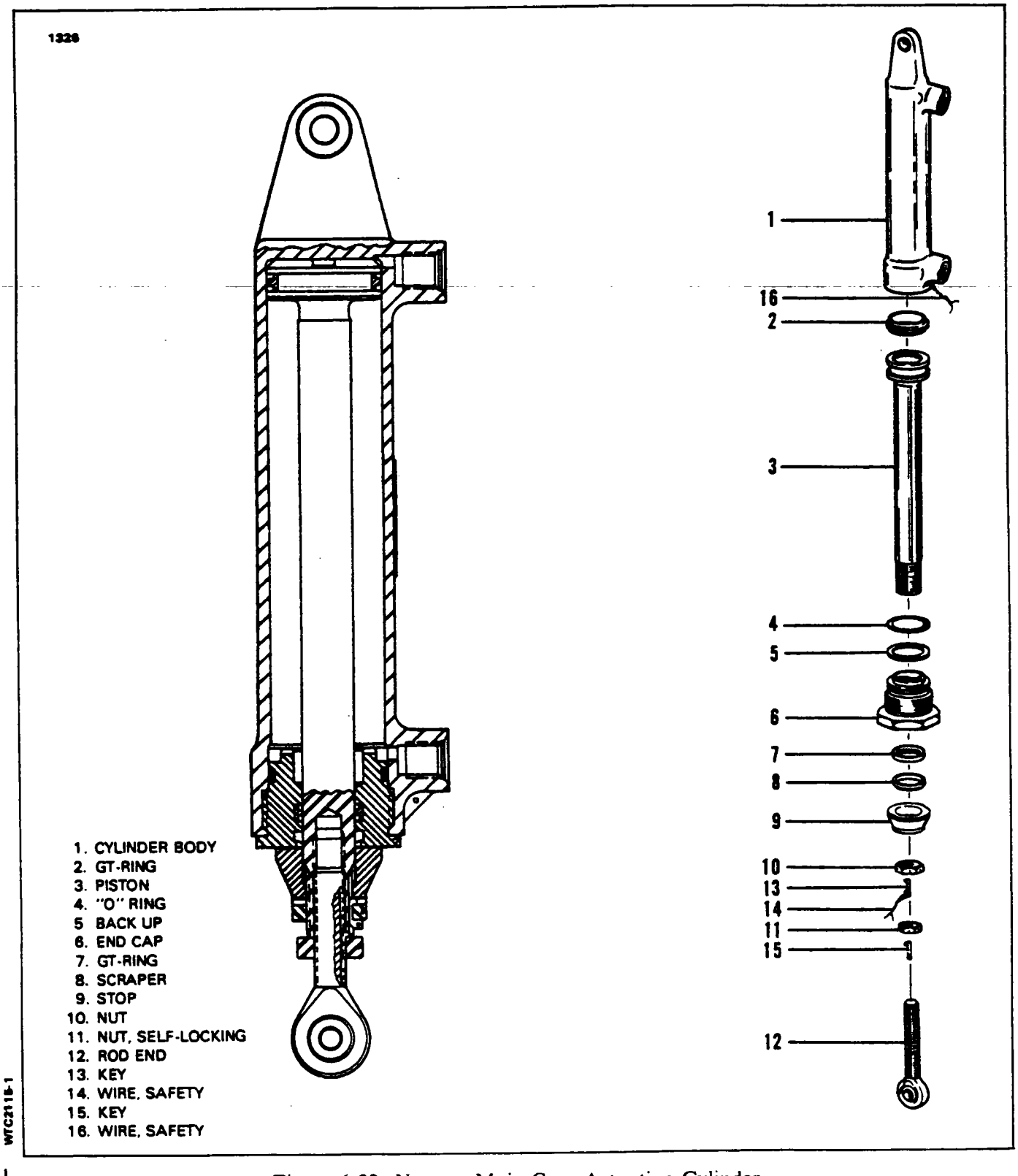

Figure 6-22. Nose or Main Gear Actuating Cylinder
(Wiebel Tool WTC 2115-1, WTC 2235-1 and WTC 2236-1)

6-122. NOSE OR MAIN GEAR ACTUATING CYLINDER (WIEBEL TOOL WTC 2115-1, WTC 2235 AND WTC 2236-1).

6-123. REMOVAL OF NOSE OR MAIN GEAR ACTUATING CYLINDER. [Same as Paragraph 6-117 (NOSE) or Paragraph 6-129 (MAIN).]

6-124. DISASSEMBLY OF NOSE OR MAIN GEAR ACTUATING CYLINDER. (Refer to Figure 6-22.)

a. Before disassembly establish rod end engagement distance to aid in preliminary assembly of the actuating cylinder.

b. Loosen nut (11) to disengage key (15) and remove rod end (12).

c. Cut safety wire (14) and remove. Remove nut (10), key (13) and stop (9) from piston (3).

d. Remove safety wire (16) and end cap (6) from the cylinder body (1) by unthreading end cap (6) and pulling out the piston (3).

e. Slide end cap (6) from the piston (3).

6-125. CLEANING, INSPECTION AND REPAIR OF NOSE OR MAIN GEAR ACTUATING CYLINDER. (Same as Paragraph 6-119.)

6-126. ASSEMBLY OF NOSE OR MAIN GEAR ACTUATING CYLINDER. (Refer to Figure 6-22.) Lubricate all parts with hydraulic fluid per MIL-H-5606 prior to assembly.

a. Install GT-ring (2) on the head of the piston (3).

b. Install back up (5) and "O" ring (4) into outside groove of end cap (6).

c. Install GT-ring (7) and scraper (8) into inside grooves of end cap (6). Tapered lip of scraper (8) to face outward.

d. Lubricate the piston assembly (3), the end cap assembly (6) and the bore of the cylinder body (1).

e. Slide the end cap assembly (6) onto the piston assembly (3).

f. Slide the piston with the end cap into the cylinder, tighten the end cap (6) by torquing to 65 inch-pounds and secure to the cylinder body (1) using safety wire (16).

g. Install the stop (9) and the nut (10) with key (13) on the piston (3).

h. Install the rod end (12) with nut (11) and key (15) into the piston (3).

i. Adjust stop (9) for proper piston stroke, tighten nut (10) by torquing to 65 inch-pounds and secure by wiring nut (10) to key (13) using safety wire (14).

j. Adjust rod end (12) to preliminary length obtained before disassembly. Refer to adjustment of Landing Gear, Section VII for final adjustments. Engage key (15) and tighten nut (11) to a torque of 85 inch-pounds.

6-127. INSTALLATION OF NOSE OR MAIN GEAR ACTUATING CYLINDER. [Same as Paragraph 6-121 (NOSE) or Paragraph 6-133 (MAIN).]

6-128. MAIN GEAR ACTUATING CYLINDERS (OZONE).

6-129. REMOVAL OF MAIN GEAR ACTUATING CYLINDERS.

a. Place the airplane on jacks. (Refer to Jacking, Section II.)

b. Disconnect the hydraulic lines from the actuating cylinder and cover the open line ends to prevent contamination.

c. Disconnect the cylinder operating rod end from the link assembly.

d. Disconnect the attachment end of the cylinder by removing the bolt that secures the cylinder and the main gear uplock crank assembly.

e. Remove the cylinder from wheel well.

6-130. DISASSEMBLY OF MAIN GEAR ACTUATING CYLINDERS. (Refer to Figure 6-23.)

a. Before disassembly establish rod end engagement distance to aid in preliminary assembly of the actuating cylinder.

b. With the cylinder removed from the airplane, remove the safety wire (13) attached to the locknut (6) and cylinder body (1).

c. Loosen nut (9) and remove rod end (10).

d. Remove locknut (6) and unscrew gland (5) from cylinder body (1).

e. Draw the piston (4) from cylinder body.

6-131. CLEANING, INSPECTION AND REPAIR OF MAIN GEAR ACTUATING CYLINDERS. (Same as Paragraph 6-119.)

6-132. ASSEMBLY OF MAIN GEAR ACTUATING CYLINDERS. (Refer to Figure 6-23.) Lubricate all parts with hydraulic fluid per MIL-H-5606 prior to assembly.

a. Install "O" ring (2) and ring back ups (3) on piston (4).

b. Install "O" ring (11) and glide ring (12) on exterior of gland (5).

c. Install "O" ring (7) and ring back ups (8) on interior of gland (5).

d. Slide gland (5) on piston (4) and screw gland into piston. Torque gland to 65 ± 15 inch-pounds.

e. Secure gland with locknut (6) torque to 65 ± 15 inch-pounds.

f. Adjust rod end (10) to preliminary length obtained before disassembly. Refer to Adjustment of Main Landing Gear, Section VII for final adjustments. Tighten nut (9) to a torque of 65 ± 15 inch-pounds.

g. Reconnect safety wire (13).

6-133. INSTALLATION OF MAIN GEAR ACTUATING CYLINDERS.

a. Position the attachment end of the cylinder and the uplock crank assembly on mounting bracket, install attachment bolt and secure.

b. Connect the operating rod end of the cylinder to the gear link assembly.

c. Connect the hydraulic lines to the cylinder.

d. Check operation of the installation and landing gear rigging as given in Section VII.

e. Remove airplane from jacks.

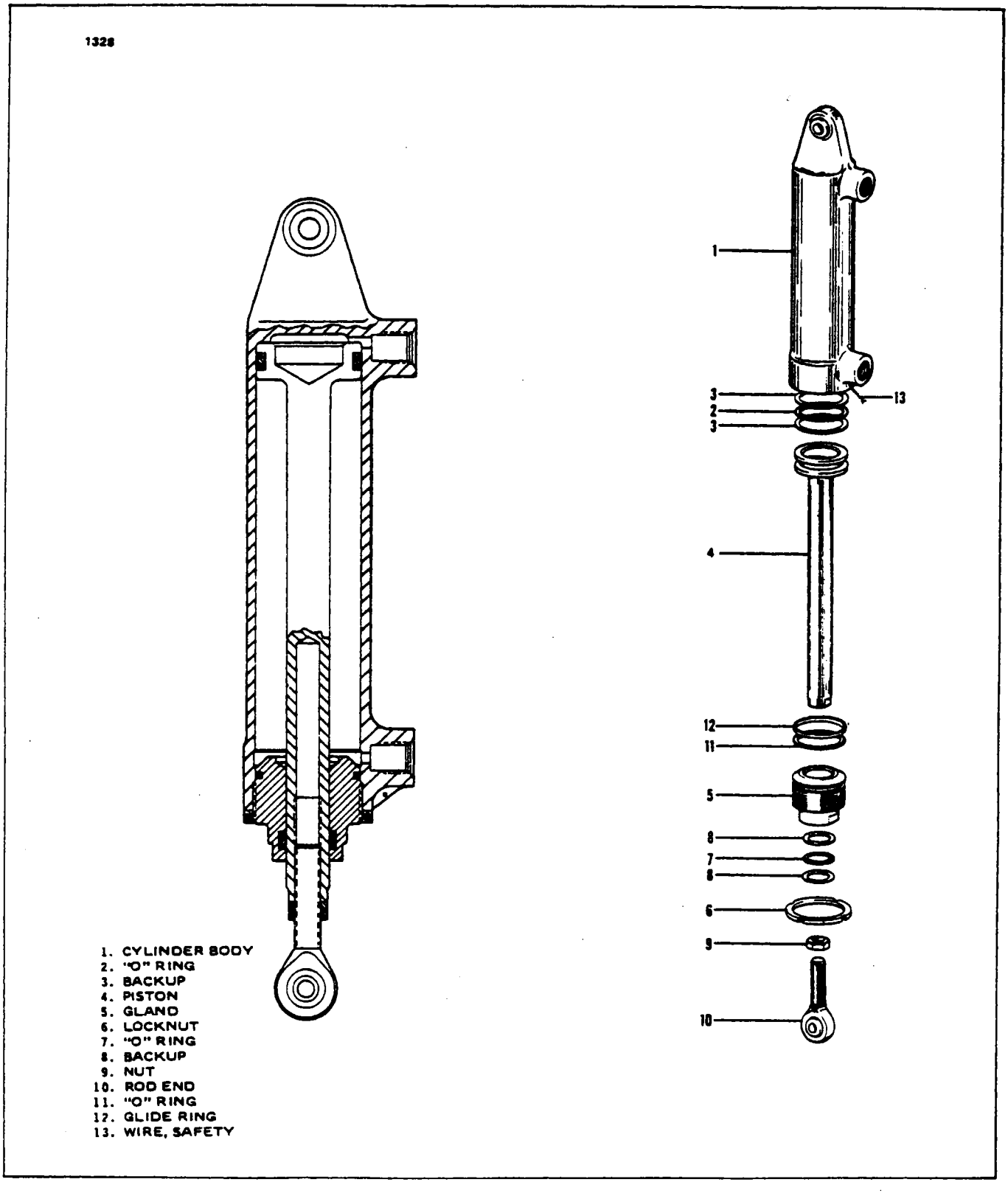

Figure 6-23. Main Gear Actuating Cylinder (Ozone OAS 5107-1)

6-134. MAIN GEAR ACTUATING CYLINDERS (WIEBEL TOOL WTC 2145-1 AND WTC 2145-3).

6-135. REMOVAL OF MAIN GEAR ACTUATING CYLINDERS. (Same as Paragraph 6-129.)

6-136. DISASSEMBLY OF MAIN GEAR ACTUATING CYLINDERS. (Refer to Figure 6-24.)

a. Before disassembly establish rod end engagement distance to aid in preliminary assembly of the actuating cylinder.

b. With the cylinder removed from the airplane, remove the safety wire (12) attached to the end cap (4) and cylinder body (1).

c. Loosen nut (9) and remove key (10) and rod end (11).

d. Unscrew end cap (4) from cylinder body (1).

e. Draw the piston (3) from cylinder body.

6-137. CLEANING, INSPECTION AND REPAIR OF MAIN GEAR ACTUATING CYLINDERS. (Same as Paragraph 6-119.)

6-138. ASSEMBLY OF MAIN GEAR ACTUATING CYLINDERS. (Refer to Figure 6-24.) Lubricate all parts with hydraulic fluid per MIL-H-5606 prior to assembly.

a. Install GT-ring (2) on piston (3).

b. Install "O" ring (5) and back up (6) on exterior of end cap (4).

c. Install GT-ring (7) and scraper (8) on interior of end cap (4).

d. Slide end cap (4) on piston (3) and screw end cap into cylinder body (1). Torque end cap to 65 ± 15 inch-pounds and safety wire (12).

e. Install nut (9) and key (10) on rod end (11) and screw into piston (3).

f. Adjust rod end (11) to preliminary length obtained before disassembly. Refer to Adjustment of Main Landing Gear, Section VII for final adjustments. Tighten nut (9) to a torque of 85 ± 15 inch-pounds.

6-139. INSTALLATION OF MAIN GEAR ACTUATING CYLINDERS. (Same as Paragraph 6-133.)

6-140. GEAR DOOR ACTUATING CYLINDERS (OZONE). (Refer to Parts Catalog for S/N Effectivity.)

6-141. REMOVAL OF GEAR DOOR ACTUATING CYLINDERS (OAS2924-3).

a. With master switch off, actuate the hand pump handle to bring the gear door down.

b. Disconnect the hydraulic lines from the actuating cylinder and cap the open line ends to prevent contamination.

c. Disconnect the cylinder from the door and its mounting bracket.

d. Remove the cylinder from the wheel well.

6-142. DISASSEMBLY OF GEAR DOOR ACTUATING CYLINDERS.(OAS-2924-3). (Refer to Figure 6-25.)

a. Unlock cylinder by applying hydraulic pressure to port in clevis end (22) of actuator.

b. Loosen locknut (2) and remove rod end (1) from piston rod. Remove locknut from piston.

c. Remove safety wire from knurled nuts (13) and loosen knurled nuts.

d. Remove gland end (5) from barrel (17), using a strap wrench on barrel.

e. Remove clevis end (22) from barrel, then push piston (7) from barrel. Use care when pushing piston from barrel, to prevent the loss of the six balls (12).

f. Remove spacer (6) from barrel.

g. Remove "O" ring (4) and back up ring (3) from gland end (5).

h. Apply a sharp blast of air to hydraulic port of clevis end (22) to remove plunger (18), washer (11), and race (10). Remove spring (21) from clevis end.

i. Remove "O" rings and back up rings from barrel, piston and plunger.

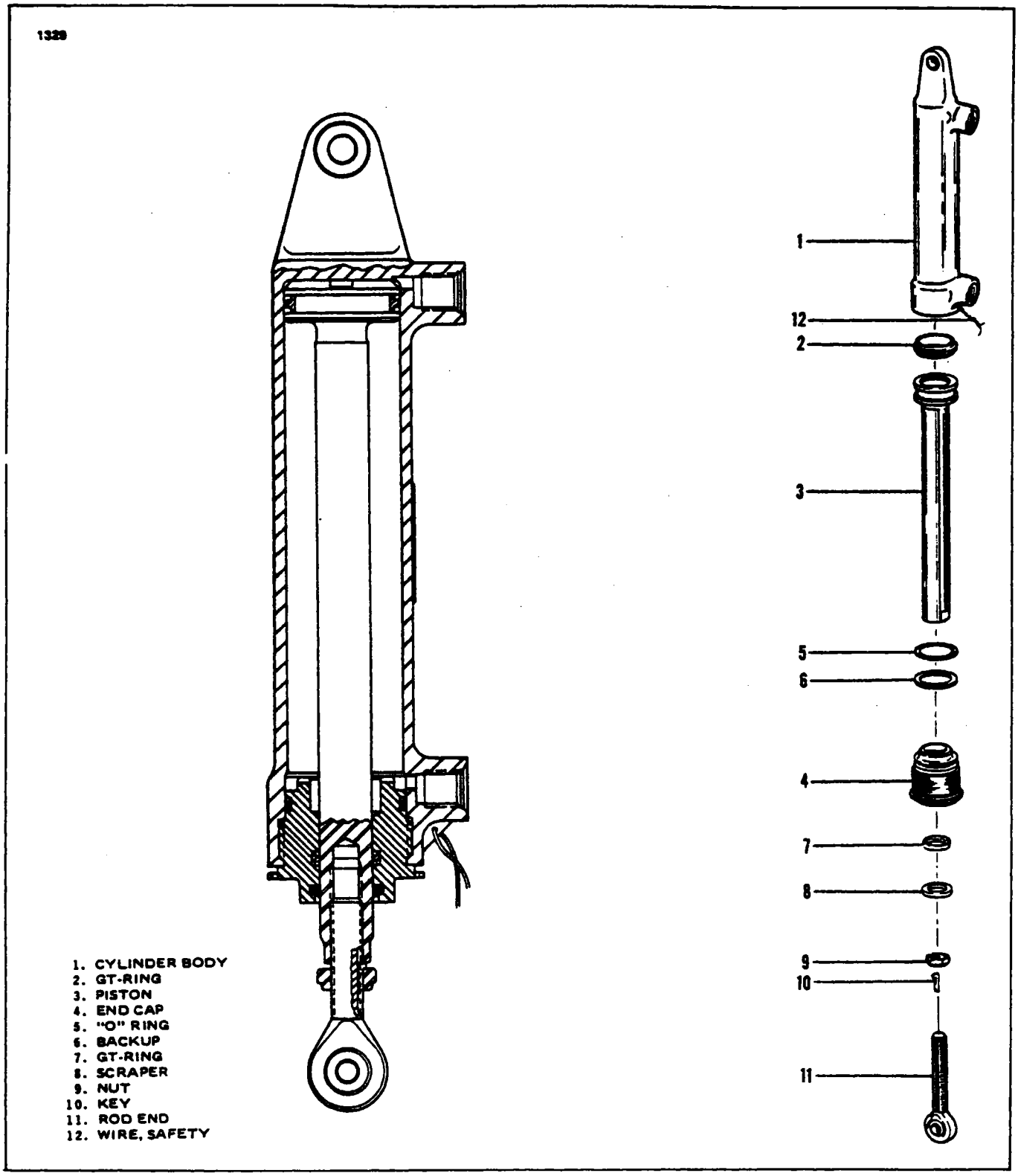

Figure 6-24. Main Gear Actuating Cylinder
(Wiebel Tool WTC 2145-1 and WTC 2145-3)

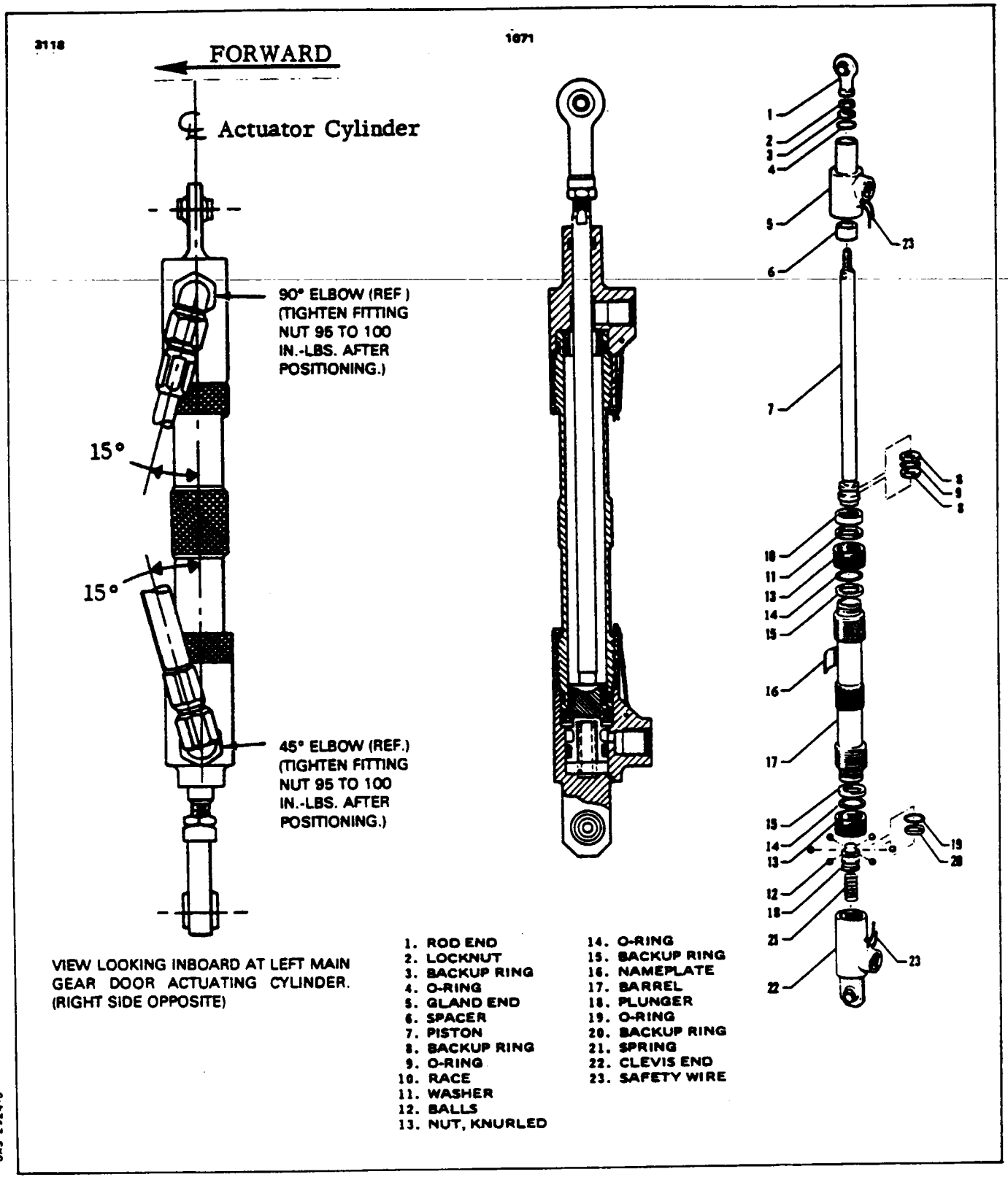

Figure 6-25. Gear Door Actuating Cylinder (Ozone 2924-3)

6-143. CLEANING, INSPECTION AND REPAIR OF GEAR DOOR ACTUATING CYLINDERS. (OAS2924-3).

a. Clean the cylinder parts with a suitable solvent and dry thoroughly.

b. Inspect all threaded surfaces for cleanliness and for freedom from cracks and excessive wear.

c. Inspect the plunger spring (21) of the plunger for evidence of breaks and distortion. The free length of the spring must be 1.055 inches and compressed to .875 inch under a 35 ± 3.5 pound load.

d. Inspect the gland end (5), spacer (6), piston (7), barrel (17), plunger (18) and clevis end (22) for cracks, chips, scratches, scoring, wear or surface irregularities which may effect their function or the overall function of the door actuator cylinder.

e. Repair of most parts of the landing gear door actuator assembly is impractical. Replace defective parts with serviceable parts. Minor scratches and scores may be removed by polishing with fine abrasive crocus cloth (Federal Specification P-C-458) providing their removal does not affect the operation of the unit. Install all new "O" rings and back up rings during reassembly of the actuator.

6-144. ASSEMBLY OF GEAR DOOR ACTUATING CYLINDER. (OAS2924-3).

a. Install "O" ring (19) and back up ring (20) in the groove on the plunger (18).

b. Insert the spring (21) and plunger (18) into the clevis end (22). Install the washer (11) and race (10) over the end of the plunger (18).

c. With knurled nuts (13) on the barrel (17), install "O" rings (14) and back up rings (15) in grooves on barrel.

d. Install "O" ring (9) and back up rings (8) in groove on piston (7) and install balls (12) in holes of piston.

e. Insert piston into barrel. Be sure that all six balls (12) are in place in the piston as the piston is inserted in the barrel.

f. Screw the barrel (17) into the clevis end (22). Tighten the barrel down smugly against race, then tighten knurled nut (13).

g. Insert spacer (6) in barrel (17). Spacer (6) is used only in main landing gear wheel door actuator.

h. Install "O" ring (4) and back up ring (3) in bore groove of gland end (5), lubricate piston rod and slide gland end over rod. Tighten the gland end on the barrel, aligning the hydraulic port fittings of the gland end with the port fitting in the clevis end.

i. Tighten knurled nuts (13) to a torque value of 130 ± 10 pounds. Install lock wire on both knurled nuts.

j. Install locknut (2) and rod end (1).

6-145. INSTALLATION OF GEAR DOOR ACTUATING CYLINDER. (OAS2924-3).

a. Position the cylinder on its mounting bracket and secure with attachment bolt.

b. Extend the cylinder control rod enough to attach the rod end to the door and secure with attachment bolt.

NOTE

Inspect the hydraulic hoses for signs of external wear from contact with the tire. Replace if necessary.

c. Inspect the hydraulic fittings on both inboard gear door actuating cylinders. Assure their position is 15° forward to the actuating cylinder centerline. (Refer to Figure 6-25.)

d. Connect the hydraulic lines to the cylinder. Torque nut to 95 to 100 inch-pounds.

e. Connect the pneumatic line to the cylinder and torque 95 to 100 inch-pounds. (WTC 2218-1 only.)

f. Perform a retraction test to assure the tire does not rub the hoses. (Rotate the tire to check for possible "High Spots" on the tread.)

g. To bring the gear door back to the closed position, turn the master switch ON, place the gear selector switch in the down position and actuate the hand pump until the door closes.

6-146. GEAR DOOR ACTUATING CYLINDERS (WIEBEL TOOL). (Refer to Parts Catalog for S/N Effectivity.)

6-147. REMOVAL OF GEAR DOOR ACTUATING CYLINDERS. (WTC2114-1). (Same as Paragraph 6-141.)

6-148. DISASSEMBLY OF GEAR DOOR ACTUATING CYLINDERS. (WTC2114-1). (Refer to Figure 6-26.)

a. Unlock the cylinder by applying hydraulic pressure to the clevis end (22) port. Extend piston (6) all the way.

b. Loosen locknut (2) and remove rod end (1) from piston (6). Remove locknut (2) from piston (6).

c. Remove safety wire (5) and (21) from nut (11) and nut (13). Loosen both nuts (11) and (13).

d. Remove end cap (4) from barrel (12) but leave end cap (4) on piston (6).

e. Remove clevis end (22) from barrel (12). Pull piston (6) with end cap (4) from barrel (12). Use care when pulling piston out of barrel to prevent the loss of the six balls (7) which are nested in the head end of the piston (6).

f. Remove end cap (4) from piston (6).

g. Pull race (16), plunger (19) and spring (20) out of the clevis end (22).

h. Remove GT-ring (3) from end cap (4).

i. Remove "O" rings (9) and (15) and the back up rings (10) and (14) from the barrel (12).

j. Remove GT-ring (8) from piston (6).

k. Remove "O" ring (17) and back up ring (18) from plunger (19).

6-149. CLEANING, INSPECTION AND REPAIR OF GEAR DOOR ACTUATING CYLINDERS.

a. Clean the cylinder parts with a suitable solvent and dry thoroughly.

b. Inspect all threaded surfaces for cleanliness and for freedom of cracks and excessive wear.

c. Inspect the plunger spring (20) for evidence of breaks and distortion. Compress the spring (20) to a length of .750 inches and measure load. Load should be 30 ± 2 pounds.

d. Inspect the end cap (4), piston (6), barrel (12), race (16), plunger (19) and clevis end (22) for cracks, chips, scratches, scoring, wear and surface irregularities which may effect proper function of the door actuator cylinder.

e. Repair of most parts of the landing gear door actuator assembly is impractical. Replace defective parts with new parts. Minor scratches and scores may be removed by polishing with "fine abrasive" crocus cloth (Federal Specification P-C-458) providing their removal does not affect the operation of the actuator assembly. Replace all "O" rings, back up rings and GT-rings with new ones during the reassembly of the actuator.

6-150. ASSEMBLY OF GEAR DOOR ACTUATING CYLINDER. (WTC2114-1). (Refer to Figure 6-26.) Lubricate all parts with oil per MIL-H-5606 prior to assembly.

a. Install "O" ring (17) and back up ring (18) into groove of plunger (19).

b. Install nut (11) and nut (13) on barrel (12).

c. Install back up rings (10) and (14) and "O" rings (9) and (15) into grooves of barrel (12).

d. Install spring (20), plunger (19) and race (16) into clevis end (22) and secure by screwing barrel (12) into clevis end (22). Tighten barrel down against the race (16), and torque to 120 to 140 inch-pounds. Then tighten nut (13) against the clevis end (22) and torque to 120 to 140 inch-pounds.

e. Install GT-ring (8) into groove of piston (6).

f. Install GT-ring (3) into groove inside the end cap (4).

g. Slide piston (6) into the end cap (4), install six balls (7) into holes in piston head (6) and insert assembly into bore of barrel (12). Screw end cap (4) onto barrel (12) and align port in end cap (4) with port in clevis end (22). Tighten nut (11) against end cap (4) and torque to 120 to 140 inch-pounds.

h. Secure nut (11) to end cap (4) using safety wire (5).

i. Secure nut (13) to clevis end (22) using safety wire (21).

j. Install locknut (2) and rod end (1) on piston (6).

k. Adjust rod end (1) to achieve proper length of actuator assembly and lock with locknut (2).

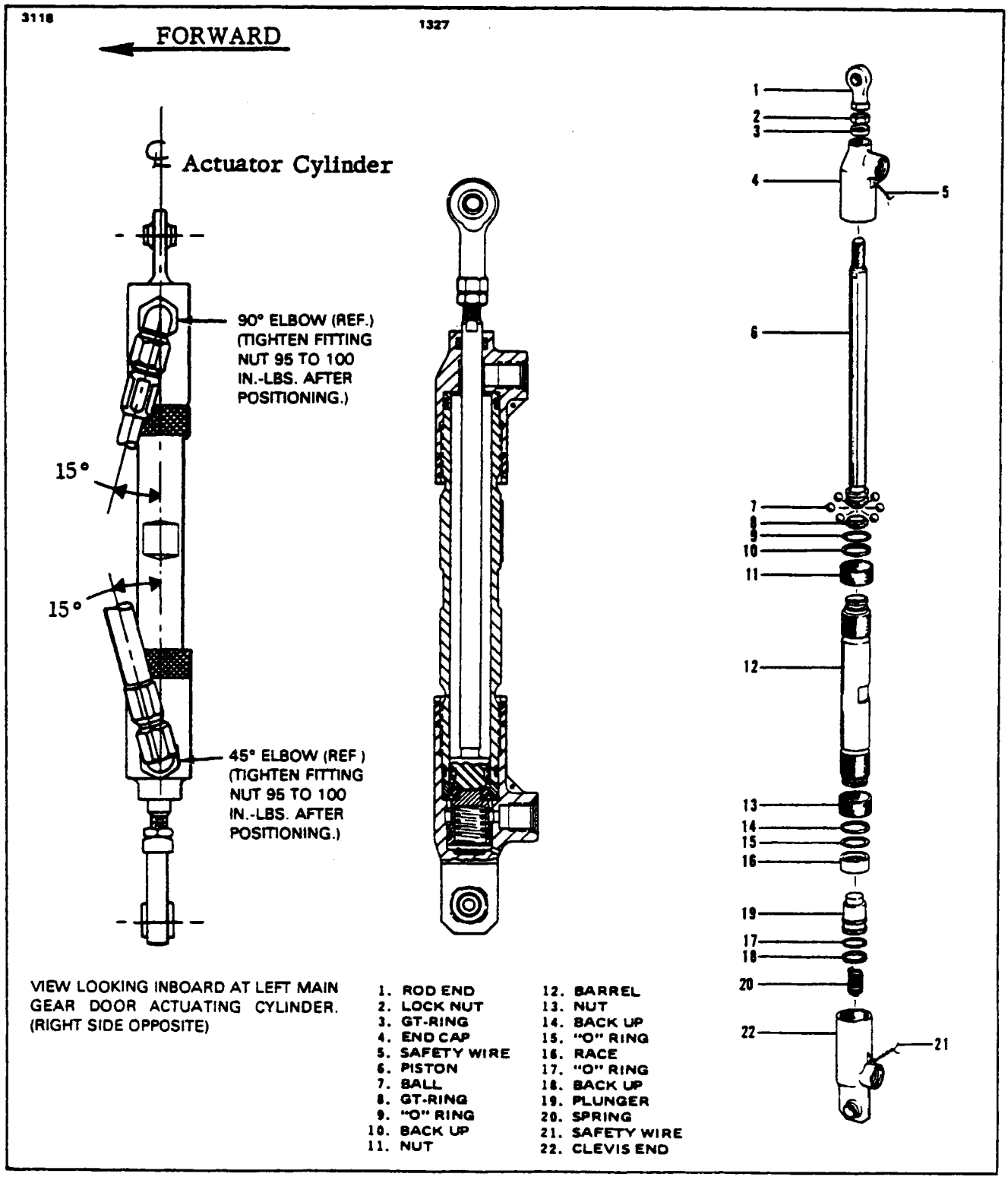

Figure 6-26. Gear Door Actuating Cylinder (Wiebel Tool, WTC2114-1)

6-151. INSTALLATION OF GEAR DOOR ACTUATING CYLINDER (WTC2114-1). (Same as Paragraph 6-145.)

6-151a. REMOVAL OF GEAR DOOR ACTUATING CYLINDERS (WTC2218-1). (Same as Paragraph 6-141.)

6-151b. DISASSEMBLY OF GEAR DOOR ACTUATING CYLINDERS (WTC2218-1). (Refer to Figure 6-26a.)

a. Unlock the cylinder by applying hydraulic pressure to the hydraulic port of the fitting assembly (21). Extend piston (6) all the way.
b. Remove safety wire (5) and (20).
c. Loosen locknut (2) and remove rod end (1) from piston (6). Remove locknut (2) from piston (6).
d. Loosen both nuts (11) and (13).
e. Remove end cap (4) from barrel (12) but leave end cap (4) on piston (6).
f. Remove fitting assembly (21) from barrel (12). Pull piston (6) with end cap (4) from barrel (12). Use care when pulling piston out of barrel to prevent the loss of the six balls (7) which are nested in the head end of the piston (6).
g. Remove end cap (4) from piston (6).
h. Remove retainer (29) and pull out plug (28) by using a threaded rod or bolt with a #6-40 thread.
i. Remove pin assembly (26) with allen wrench.
j. Remove retainer assembly (22) and the piston (25).
k. Pull race (16), plunger (17) and spring (19) out of the fitting assembly (21).
l. Remove GT-ring (3) from end cap (4).
m. Remove GT-ring (8) from piston (6).
n. Remove O-rings (9 and 15) with back up rings (10 and 14) from barrel (12).
o. Remove O-ring (18) from plunger (17).
p. Remove O-ring (23) from retainer assembly (22).
q. Remove O-ring (24) from piston (25).
r. Remove O-ring (27) from plug (28).

6-151c. CLEANING, INSPECTION AND REPAIR OF GEAR DOOR ACTUATING CYLINDERS (WTC2218-1). (Same as Paragraph 6-149.)

6-151d. ASSEMBLY OF GEAR DOOR ACTUATING CYLINDERS (WTC2218-1). (Refer to Figure 6-26a.)

NOTE

Lubricate all parts with oil per MIL-H-5606 prior to assembly.

a. Install O-ring (18) into groove of plunger (17).
b. Install nut (11 and 13) on barrel (12).
c. Install back up rings (10 and 14) and O-rings (9 and 15) into grooves of barrel (12).
d. Install spring (19), plunger (17) and race (16) into fitting assembly (21) and secure by screwing barrel (12) into fitting assembly (21). Tighten barrel down against the race (16) and torque 120 to 140 inch-pounds. Tighten nut (13) against the fitting assembly (21) and torque 120 to 140 inch-pounds.
e. Install GT-ring (8) into groove of piston (6).
f. Install GT-ring (3) into inside groove of end cap (4).
g. Slide piston (6) into the end cap (4), install six balls (7) into the holes in the piston head (6) and insert assembly into bore of barrel (12) and align port in end cap (4) with hydraulic port in fitting assembly (21). Tighten nut (11) against end cap (4) and torque 120 to 140 inch-pounds.

h. Secure nut (11) to end cap (4) using safety wire (5).
i. Secure nut (13) to fitting assembly (21) using safety wire (20).
j. Install locknut (2) and rod end (1) on piston (6).
k. Install O-ring (24) into groove of piston (25).
l. Install O-ring (23) into groove of retainer assembly (22).
m. Install O-ring (27) into groove of plug (28).
n. Install piston (25) into fitting assembly (21). Cross hole in piston (25) to be in line with hole below the "air" port in the fitting assembly (21).
o. Install pin assembly (26) into piston (25) using allen wrench.

NOTE

Screw pin assembly (26) all the way in till its tip touches the plunger (17) and then "back-up" half a turn.

p. Install plug (28) into fitting assembly (21) and secure with retainer (29).
q. Install retainer assembly (22) into fitting assembly (21).

NOTE

Screw retainer assembly (22) in till face of retainer assembly is flush with face of fitting assembly (21).

r. Adjust rod end (1) to achieve proper length of actuator assembly and lock with locknut (2).

6-151e. INSTALLATION OF GEAR DOOR ACTUATING CYLINDERS (WTC2218-1). (Same as Paragraph 6-145.)

6-152. HYDRAULIC LINES.

6-153. REMOVAL AND INSTALLATION OF HYDRAULIC LINES. Remove a damaged hydraulic line by disconnecting the fittings at each end and by disconnecting where secured by brackets. Refer to Figure 6-18 as an aid in the location of attaching brackets and bends in the lines. Provide a small container for draining the line. Install a new or repaired line in reverse order and refill the Power Pack with hydraulic fluid in accordance with Filling Hydraulic Reservoir, Section II.

NOTE

Where straight thread type fittings are used, the locknuts are to be tightened so that the "O" ring seals are on the non-threaded portion of the fitting.

6-154. HYDRAULIC FILTER.

6-155. REMOVAL AND INSTALLATION OF HYDRAULIC FILTER. The hydraulic filter, located on the lower right forward side of each engine firewall, is removed by the following procedure:
a. Remove the lower engine cowl and the right access plate on the engine nacelle aft of the firewall.
b. Disconnect the filter inlet hose and the outlet line from the filter.
c. Remove the filter from the firewall by holding the bolts at the aft side of the firewall and turning off the nut at the filter.
d. The filter may be installed in the reverse procedure.
e. After engine has been operated, check for leaks.

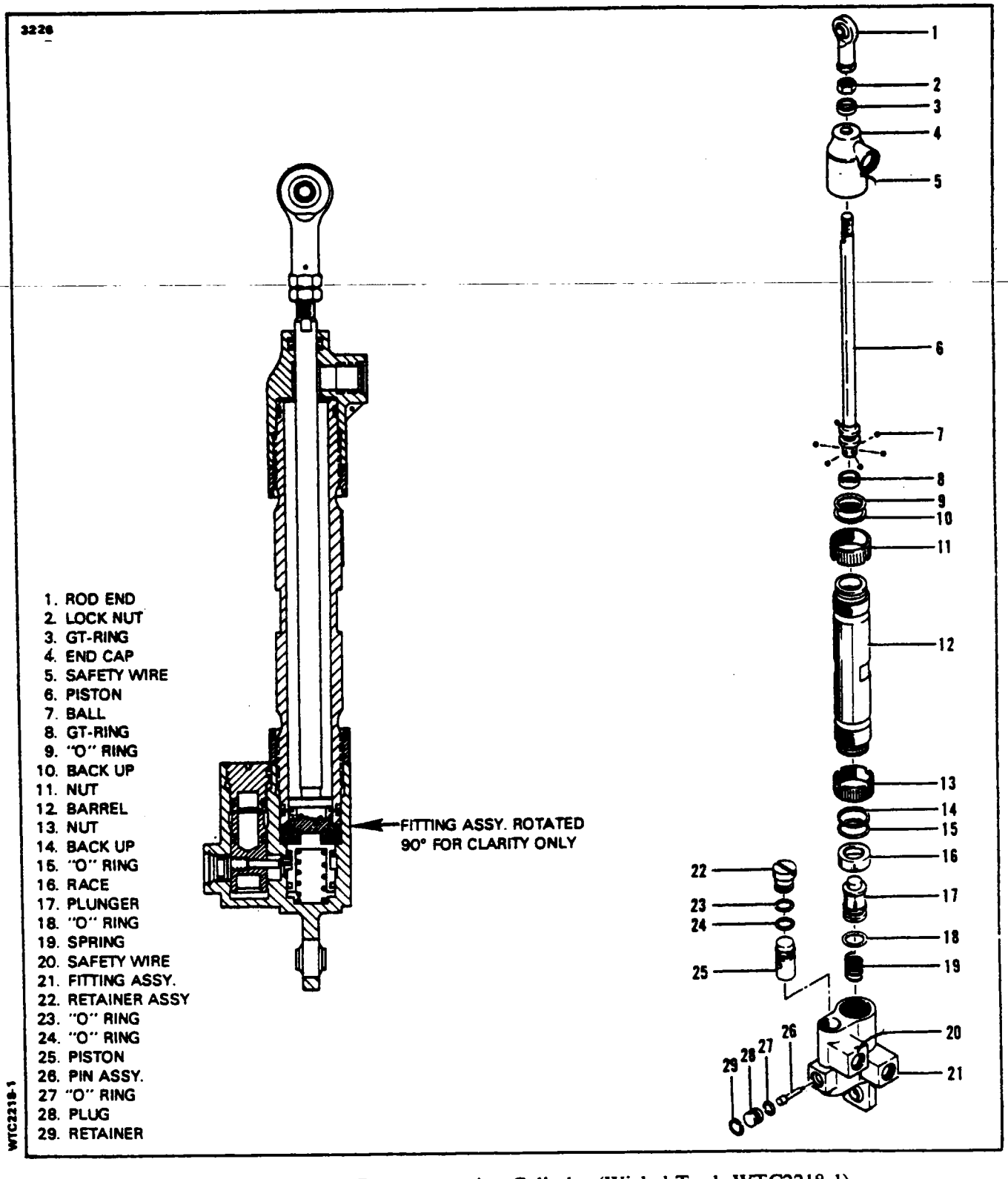

Figure 6-26a. Gear Door Actuating Cylinder (Wiebel Tool, WTC2218-1)

6-156. REPLACEMENT OF FILTER ELEMENT. (Refer to Figure 6-27.)

a. Remove the lower engine cowl.
b. Cut safety wire, unscrew bowl and remove filter element.
c. Clean filter bowl with a suitable cleaning solvent and dry.
d. Replace filter element and "O" ring on bowl.
e. Half fill filter bowl to minimize trapped air in the hydraulic system and replace bowl.
f. Safety filter bowl with MS20995C20 safety wire and replace cowl.
g. After engine has been operated, check for leaks.

6-157. HYDRAULIC PUMP.

6-158. HYDRAULIC PUMP OPERATIONAL CHECK. To determine the operable condition of each hydraulic pump, the following check may be conducted:

a. Start one engine and allow it to stabilize at idle.

b. With the engine operating at 52% gas generator speed, move the gear selector handle to the gear down position. The one pump should build up pressure within the hydraulic system and return the selector handle to neutral position within three to nine seconds. Again select the down position and check the handle return time.

c. Shut down the engine and repeat the preceding steps for the other engine.

d. Should it be found that the selector handle will not return to neutral during the operational check for one pump, but will return within the required time with the check of the other, then it can be assumed that the pump is at fault and it should be removed to determine the cause of malfunction.

6-159. PROCEDURE AFTER ENGINE-DRIVEN HYDRAULIC PUMP FAILURE. Should a pump breakage occur, there may be metal particles in the hydraulic system. To rectify this condition the hydraulic system should be flushed. Proceed with the following steps:

a. Replace the defective engine-driven hydraulic pump and prime it in accordance with Paragraph 6-165. Do not connect the pump to the rest of the hydraulic system until the system has been flushed.

b. Proceed to flush the system in accordance with Paragraph 6-4.

c. Remove the filter elements and check for metal particles. If metal particles are evident in the filter, clean the filter bowl with dry cleaning solvent and dry with compressed air. Install new filter elements in accordance with Paragraph 6-156.

6-160. REMOVAL OF HYDRAULIC PUMP.

a. Remove upper and lower engine cowls, as required, by releasing skin fasteners and separating the two halves.

b. Place a drip pan under the engine to catch spillage.

c. Disconnect the two hydraulic hoses from the end of the pump and cap them to prevent contamination.

d. Disconnect the drain hose from the bottom of the pump.

e. Remove the four nuts, lockwashers, and flat washers from the base of the pump.

f. Remove the pump from the engine housing.

g. Upon removal of the pump from its drive gear, remove and destroy or discard the gasket from the pump mounting face. The gasket and all seal rings should be replaced with new parts upon reassembly. Never reinstall an old gasket or seal ring.

6-161. DISASSEMBLY OF HYDRAULIC PUMP. (Refer to Figure 6-28.)

a. Clean outside of pump thoroughly.

b. Mark a line from the rear side, across the centerplate to the drive side with blue Dykem or some equivalent removable substance. This will assure proper reassembly.

CAUTION

During disassembly do not use a screwdriver or sharp tool to separate the parts.

c. Remove the four socket head cap screws (12), securing the rear side (13), centerplate (10) and drive side (7) together. These screws are threaded into the drive side.

d. Remove the four locknuts (8) from the studs (14) extending out of the drive side flange that mates with the centerplate.

e. Remove the rear side by rocking it from side to side and sliding it from the four dowels (11). In case of sticking, tap gently with a plastic or rubber hammer.

f. Remove the four studs (14) from the rear side. Remove and discard the large "O" ring seal (15) from the rear side. Pull the drive (1) and secondary shafts (17) until drive pins (16 and 2) clear gears. Remove drive pins.

g. Remove drive gear (19), secondary gear (18), and secondary shaft (17) by pulling from centerplate (10).

h. Remove drive shaft by pushing out of drive side. Remove centerplate, with dowels, by rocking it from side to side.

i. Remove large "O" ring seal (9) from drive side and discard.

j. Remove retainer ring (3) securing seal (4 or 5) in drive side seal bore. Note proper position of seal (4 or 5) upon disassembly. Seal must not be reversed at reassembly. Remove and discard the two part seal.

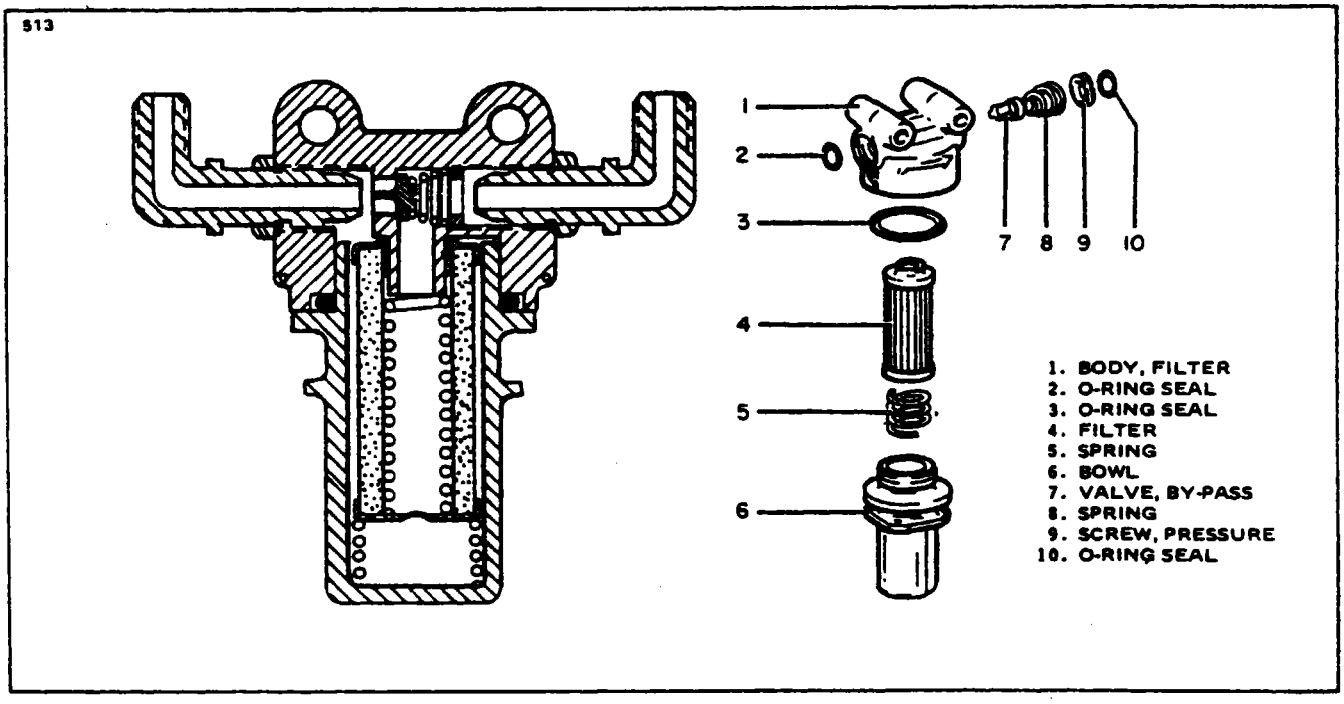

Figure 6-27. Hydraulic Filter

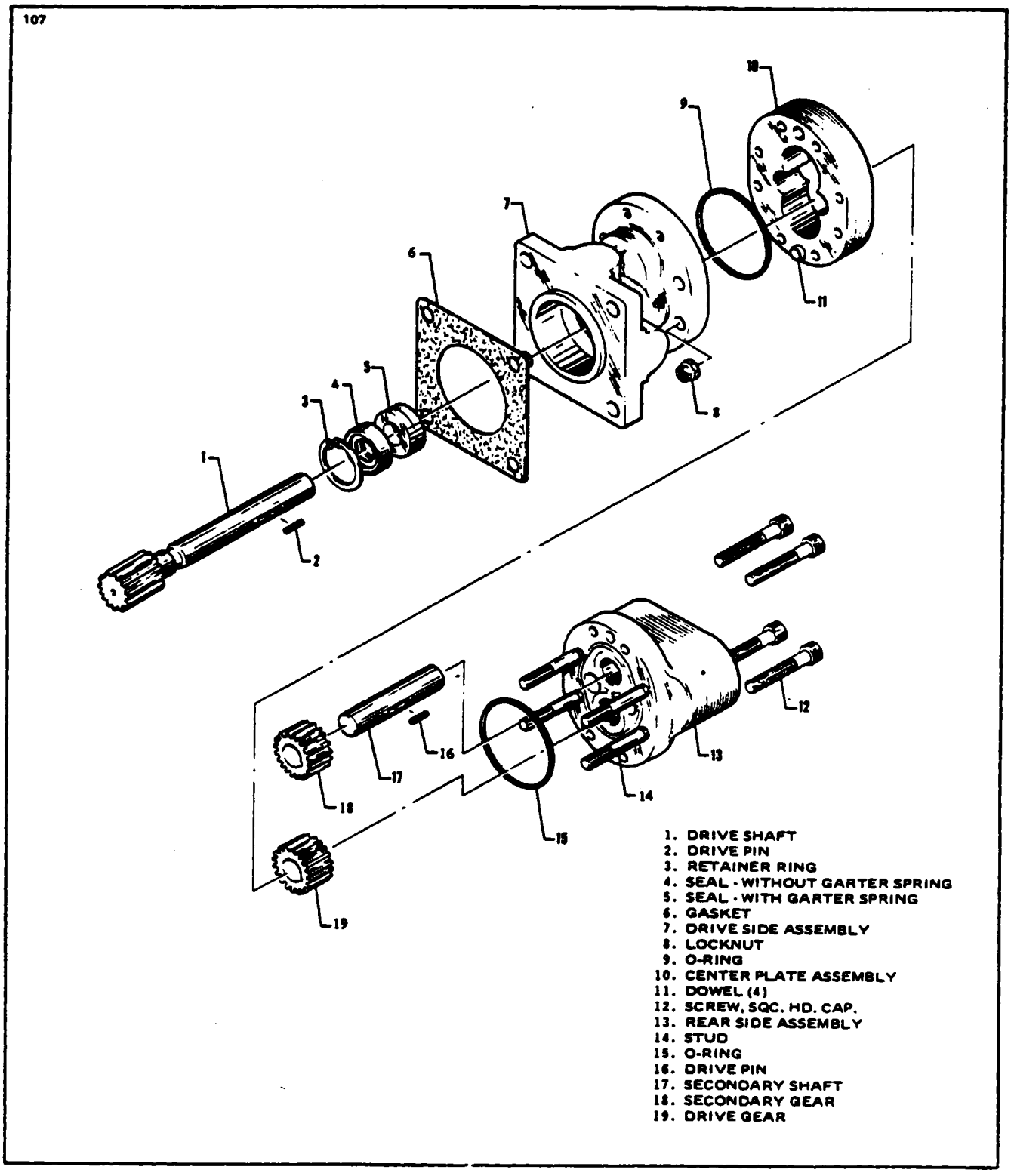

Figure 6-28. Hydraulic Pump

TABLE VI-III. INSPECTION AND REPAIR, HYDRAULIC PUMP

ITEM (Refer to figure 6-28.)	INSPECTION	REPAIR
Rear Side (13)	Visually inspect the lapped face for scratches or signs of scoring.	Lap the surface to remove any scratches.
Centerplate (10)	Visually inspect the two lapped faces for scratches or scoring. Inspect the gear pockets for deep scratches.	Lightly stone any burrs around the gear pockets. Lap the faces, but do not remove more than 0.0001" total of metal from both sides.
Drive Side (7)	Visually inspect the lapped surface for scratches or signs of scoring.	Lap the surface to remove any scratches. If deep scratches are present replace part.
Secondary Shaft (17)	Inspect the shaft for deep scratches in the bearing area.	If deep scratches are present, replace secondary shaft.
Gears (18) and (19)	Visually inspect gears for evidence of chipped teeth or cracks around the bore. Measure the gear O.D., which should be 1.1646"/1.1644"	If gears are not within tolerance or if there are any cracked teeth, replace the pump.
Bearings	Visually inspect the bearing bores for scratches and/or scoring.	If badly scored, replace pump.

NOTE

The Parts Catalog should be used to obtain repair kits to service this pump.

6-162. CLEANING, INSPECTION, REPAIR OF HYDRAULIC PUMP.

a. Immerse and wash all metallic parts in trichlorethylene (Military Specification MIL-T-7003) or some equivalent commercial cleaning solvent. Clean all openings and passages with a fine fiber brush, or equivalent, dipped in solvent. Do not scrub any surface with a tool that will scratch surface.

WARNING

Wear goggles, rubber gloves and provide adequate ventilation when using trichlorethylene or cleaning solvents. Repeated contact of solvent with skin may produce irritation. If vapors are inhaled, serious damage may result.

b. Dry all parts thoroughly with a clean, lint-free cloth or with dry, filtered compressed air at 20 psi maximum. Blow out all parts, bores, and passages with compressed air.

c. Under strong light and preferrably under magnification, inspect all parts for scoring, nicks, scratches, pitting, corrosion, cracks and excessive wear. Inspect all threaded surfaces for chipping and crossed or stripped threads. Inspect parts for conformance to information given in Table VI-III. The table gives the items which should be inspected and the corrective action necessary when the pump parts do not pass this inspection.

NOTE

Although the pump may still operate under conditions where some of the parts exceed the wear limits, it will probably be found that the pump is not producing its rated capacity and therefore, the system may not be doing an adequate job. Therefore, it is necessary to repair or replace any parts that are not within the stated limits.

6-163. ASSEMBLY OF HYDRAULIC PUMP. (Refer to Figure 6-28.) The seal and seal rings should be soaked in the hydraulic (MIL-H-5606) fluid for two hours minimum time before installation.

a. Replace drive shaft seal (4 or 5) into drive side seal bore. Be sure to install drive shaft seal, "back to back," as noted during disassembly.

b. Replace retainer ring (3) into drive side seal bore.

c. Install new "O" ring seal (9) on drive side.

d. Mate centerplate assembly (10) with drive side assembly (7) and align dowel pins.

e. Install drive shaft (1) from engine side of drive side assembly.

f. Install secondary shaft (17) into centerplate. Install drive and secondary gears (19 and 18) onto drive and secondary shafts (1 and 17). Be sure the drive pin counter bore on the drive gear faces the pump rear side. Install drive pins.

g. Install the four studs (14) and new "O" ring seal (15) on the rear side assembly (13).

h. Lightly oil gear teeth with hydraulic fluid before completing assembly.

i. Mate the rear side assembly (13) with the centerplate (10), using caution to align the drive and secondary shafts with the respective holes in the rear side assembly.

j. Replace the four locknuts (8) on the studs (14) extending out of the drive side flange that mates with the centerplate.

k. Replace the four socket head cap screws (12) that secure the rear side, centerplate and drive side assemblies together. Torque the socket head cap screws and locknut to 60 inch-pounds.

l. When the pump is assembled, turn drive shaft by hand to make sure the pump turns freely. If there is any sticking or binding at all, disassemble pump and determine the trouble. Do not apply power to the pump until it turns freely by hand.

NOTE

If possible run pump at rated speed while gradually increasing the pressure up to rated pressure by the end of a thirty minute period.

6-164. INSTALLATION OF HYDRAULIC PUMP.

a. Place a new gasket on the base of the housing.
b. Lubricate the pump shaft splines with Molybdenum Disulfide, Type "G," paste form lubricant.
c. Install the pump on the housing.

NOTE

When installing the pump, keep the drain fitting facing to the lower right in the downward position.

d. Line up the shaft splines with the gear inside the engine housing.
e. Install flat washers, lock washers, and nuts on the base of the pump and tighten.
f. Install the two hydraulic hoses and prime the pump before completing the hookup to the firewall fittings in accordance with Paragraph 6-165.
g. Check to be sure that the system reservoir contains the required amount of clean hydraulic fluid.
h. Change system fluid filters, in accordance with Paragraph 6-156.

6-165. PRIMING HYDRAULIC PUMP. The following instructions for priming the hydraulic pump assures that the pump will not be operated in a dry condition and shall be followed whenever a pump is serviced or replaced.

a. Remove the hydraulic suction and pressure lines from the firewall fittings.
b. Install caps on suction and pressure fitting at the firewall to prevent the loss of fluid prior to the hookup of the hydraulic lines.
c. Holding both lines at a level higher than the pump, pour hydraulic fluid, MIL-H-5606, into the lines.
d. Remove one cap at a time from the firewall fittings and connect the appropriate line to the fitting, trying not to spill any of the hydraulic fluid previously put into the lines.
e. After the engine has been operated, check the hookup for leaks.

6-166. HYDRAULIC SYSTEM FAILURE. The emergency use of the hand pump to extend the gears indicates the engine driven pumps were operating without sufficient fluid. This condition causes additional wear on the engine driven pumps. Therefore, the filter elements must be removed and check even if pump failure is not apparent and/or the primary cause of the problem.

a. Remove the filter elements and check for metal particles.
b. If no metal particles are evident proceed with the following:
   1. Replace filter element per Paragraph 6-156.
   2. Replenish fluid as noted in Section II.
c. If metal particles are evident in either filter proceed with the following:

1. Inspect, replace or repair both hydraulic pumps. (Refer to Paragraphs 6-160 to 6-164.)
2. Prime pumps in accordance with Paragraph 6-165. Do not connect the pumps to the rest of the hydraulic system until the system has been flushed.
3. Proceed to flush the system in accordance with Paragraph 6-4.

6-167. HIGH ALTITUDE GEAR OPERATION. Should it be necessary to operate the landing gear at altitudes above 15,000 feet, the landing gear selector may return to its neutral position before the gear door closing cycle is complete. If this occurs, manual override of the time delay cycle must be used to close the gear doors.

During gear extension, if the selector returns to neutral at the same time the gears are locked down, and before the gear doors have had time to close, again select the gear down position and hold the handle down for an additional 3 to 4 seconds. This allows completion of the door closing cycle.

During gear retraction, if the selector returns to neutral and the gear unsafe light remains lit, again select the gear up position and hold the handle up for 4 seconds after the gear unsafe light extinguishes. Be sure that the light has extinguished before exceeding the maximum gear extended speed.

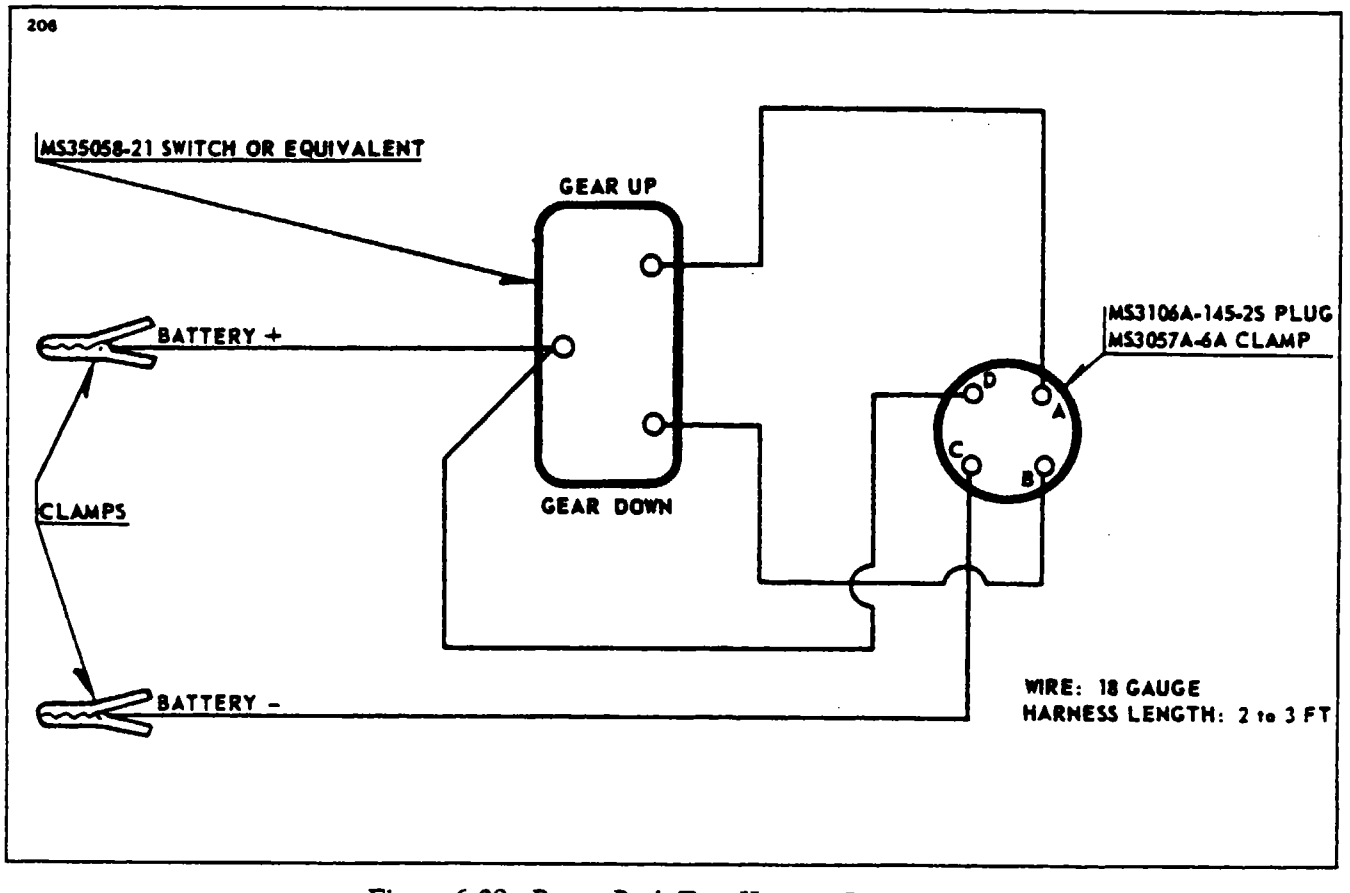

Figure 6-29. Power Pack Test Harness Schematic

TABLE VI-IV. TROUBLESHOOTING, HYDRAULIC SYSTEM

Trouble	Cause	Remedy
Landing gear system fails to operate.	Selector lever disconnected.	Connect lever.
	Selector lever out of adjustment.	Adjust lever.
	Selector lever jammed. (Note: Selector lever cannot be moved to gear up while left main gear strut is compressed or with electrical power off.)	Adjust lever.
	Hydraulic fluid reservoir below operating level.	Refer to paragraph 6-166. Then fill the power pack with hydraulic fluid.
	Leak or obstruction in hydraulic lines.	Refer to paragraph 6-166. Then check the system with hydraulic test unit or hand pump.
	Internal leakage in main relief valve.	Check system operation per paragraph 6-13.
	Internal leakage in hand pump relief valve.	Check system operation per paragraph 6-14.
Gear operates abnormally slow or partially.	Low fluid level.	Refer to paragraph 6-166. Then fill power pack with hydraulic fluid.
	Leaking or kinked line.	Refer to paragraph 6-166. Then replace line.
	Internal leak in cylinder.	Repair or replace cylinder.

TABLE VI-IV. TROUBLESHOOTING, HYDRAULIC SYSTEM (cont.)

Trouble	Cause	Remedy
Gear operates abnormally slow or partially. (cont.)	Priority valve out of adjustment or leaking.	Check valve operation per paragraph 6-12.
	Slow leak in main relief valve. (Engine pump.)	Check system operation per paragraph 6-13.
	Slow leak in hand pump relief valve.	Check system operation per paragraph 6-14.
	External leakage at selector valve.	Refer to paragraph 6-166. Then replace damaged "O" rings.
	One engine pump inoperative.	Refer to paragraph 6-159 before replacing pump.
Selector handle returns to neutral before cycle is complete.	Cable, line or obstruction restricting the travel required to fully select gear up or down.	Check and remove obstruction.
	Selector lever out of adjustment.	Adjust control.
	If gear completes cycle (red light out) but doors do not close, battery output may be low.	Check voltage.
	Time delay valve and/or piston release lock out of adjustment.	Check operation per paragraphs 6-10 and 6-11.
	Time delay valve air locked.	Bleed air out by holding selector down for 30 seconds, then make three or four rapid movements to neutral and back to down.

TABLE VI-IV. TROUBLESHOOTING, HYDRAULIC SYSTEM (cont.)

Trouble	Cause	Remedy
Gear retracts or extends before doors open.	Priority valve leaks in power pack.	Check valve cracking pressure.
	Solenoid valve stuck in closed position.	Turn off power and hand pump doors open. (Note: With power off solenoid valve shuttles to door open and the doors may be opened without selecting gear up or down.)
	Micro switch on power pack out of adjustment.	Check for loose wire or mounting, or bent bracket.
Doors come open in flight. NOTE Refer to Landing Gear Troubleshooting Chart, Table VII-III.	Improper rigging of door actuator.	Check for proper rigging.
	Malfunction of actuator lock mechanism.	Check actuator operation.
Doors fail to close.	Faulty limit switch.	Check all indicator lights.
	Low electric power supply.	Check battery.
	Cannon plug on power pack loose.	Tighten.
	Solenoid valve stuck in door open position.	Check wiring to solenoid valve.
	Circuit breaker out.	Check breaker. (Note: without electric power, the gear doors will open but not close.)

SECTION VII

LANDING GEAR AND BRAKE SYSTEM

Paragraph		Aerofiche Grid No.
7-1.	Introduction	2D22
7-2.	Description and Principle of Operation	2D22
7-3.	Troubleshooting	2D23
7-4.	Landing Gear System	2D23
7-5.	Nose Landing Gear System	2D23
7-6.	Disassembly of Nose Gear Oleo	2D23
7-7.	Cleaning, Inspection and Repair of Nose Gear Oleo	2D24
7-8.	Assembly of Nose Gear Oleo	2D24
7-8a.	Installation of T-Rings	2E3
7-9.	Removal of Nose Landing Gear (Without Emergency Blowdown System)	2E3
7-10.	Cleaning, Inspection and Repair of Nose Landing Gear	2E5
7-11.	Installation of Nose Landing Gear (Without Emergency Blowdown System)	2E8
7-12.	Removal of Nose Landing Gear (With Emergency Blowdown System)	2E9
7-13.	Installation of Nose Landing Gear (With Emergency Blowdown System)	2E10
7-14.	Adjustment of Nose Landing Gear and Emergency Gear Extension System	2E12
7-15.	Alignment of Nose Landing Gear	2E16
7-16.	Removal of Nose Gear Door Assembly	2E17
7-17.	Cleaning, Inspection and Repair of Nose Gear Door Assembly	2E17
7-18.	Installation of Nose Gear Door Assembly	2E17
7-19.	Adjustment of Nose Gear Door	2E17
7-20.	Removal of Nose Gear Steering Mechanism	2E18
7-21.	Removal and Installation of Steering Push-Pull Tube	2E18
7-22.	Installation of Nose Gear Steering Mechanism	2E20
7-23.	Main Landing Gear System	2E20
7-24.	Disassembly of Main Gear Oleo	2E20
7-25.	Cleaning, Inspection and Repair of Main Gear Oleo	2E21
7-26.	Assembly of Main Gear Oleo	2E21
7-27.	Removal of Main Landing Gear	2F2
7-28.	Cleaning, Inspection and Repair of the Main Landing Gear	2F2
7-29.	Installation of Main Landing Gear	2F3
7-30.	Rigging and Adjustment of Main Landing Gear and Emergency Gear Extension System	2F4
7-31.	Alignment of Main Landing Gear	2F7
7-32.	Removal of Main Gear Door Assembly	2F8
7-33.	Cleaning, Inspection and Repair of Main Gear Door Assembly	2F8
7-33a.	Inboard Door Hinge Inspection	2F9
7-34.	Installation of Main Gear Door Assembly	2F9
7-35.	Adjustment of Main Landing Gear Doors	2F9
7-36.	Replacement of Wiper Strip on Landing Gear Struts	2F10

Paragraph			Aerofiche Grid No.
	7-36a.	Emergency Extension System	2F10
	7-36b.	Removal of Gas Storage Bottles	2F10
	7-36c.	Testing and Inspection of Gas Storage Bottle	2F10
	7-36d.	Testing Emergency Gear System for Operation and Leaks	2F10
	7-36e.	Installation of Gas Storage Bottle	2F11
	7-36f.	Removing Pressure From Lines After Activation of System	2F11
7-37.	Landing Gear Light Switches		2F16
	7-38.	Adjustment of Nose Gear Up Light Switch	2F16
	7-39.	Adjustment of Nose Gear Down Light Switch	2F16
	7-40.	Adjustment of Main Gear Up Light Switch	2F16
	7-41.	Adjustment of Main Gear Down Light Switch	2F17
	7-42.	Adjustment of Main Inboard Gear Door Ajar Switches	2F17
	7-43.	Adjustment of Landing Gear Safety Switch	2F18
	7-44.	Adjustment of Landing Gear Propeller Reverse Switch	2F18
7-45.	Landing Gear Warning System		2F19
	7-46.	Removal of Gear Warning Switches	2F19
	7-47.	Installation of Gear Warning Switches	2F19
	7-48.	Adjustment of Gear Warning Switches	2F20
7-49.	Wheels		2F21
	7-50.	Removal and Disassembly of Nose Wheel (B.F. Goodrich)	2F21
	7-51.	Inspection of Nose Wheel Assembly (B.F. Goodrich)	2F21
	7-52.	Repair and Replacement of Nose Wheel Assembly (B.F. Goodrich)	2F21
	7-53.	Assembly and Installation of Nose Wheel (B.F. Goodrich)	2F23
	7-54.	Removal and Disassembly of Main Wheel (Goodyear 9544171-1)	2F23
	7-55.	Cleaning and Inspection of Main Wheel Assembly (Goodyear 9544171-1)	2G1
	7-56.	Repair of Main Wheel Assembly (Goodyear 9544171-1)	2G2
	7-57.	Assembly and Installation of Main Wheel (Goodyear 9544171-1)	2G4
	7-58.	Removal and Disassembly of Main Wheel (Cleveland 40-106/40-106A)	2G6
	7-59.	Inspection and Repair of Main Wheel Assembly (Cleveland 40-106/40-106A)	2G6
	7-60.	Assembly and Installation of Main Wheel (Cleveland 40-106/40-106A)	2G7
	7-61.	Removal and Disassembly of Main Wheel (B.F. Goodrich 3-1392 and 3-1424)	2G8
	7-62.	Cleaning and Inspection of Main Wheel Assembly (B.F. Goodrich 3-1392 and 3-1424)	2G10
	7-63.	Repair of Main Wheel Assembly (B.F. Goodrich 3-1392 and 3-1424)	2G11
	7-64.	Assembly and Installation of Main Wheel (B.F. Goodrich 3-1392 and 3-1424)	2G14
7-65.	Brake System (Goodyear 5002376)		2G15
7-66.	Description		2G15
	7-67.	Brake Wear Check (Goodyear 5002376)	2G16
	7-68.	Removal and Disassembly of Brake System (Goodyear 5002376)	2G16
	7-69.	Cleaning and Inspection of Brake Assembly (Goodyear 5002376)	2G16
	7-70.	Repair of Brake Assembly (Goodyear 5002376)	2G18
	7-71.	Assembly and Installation of Brake Assembly (Goodyear 5002376)	2G23
7-72.	Brake System (Cleveland 30-106)		2H5
	7-73.	Wheel Brake Assembly (Cleveland 3-106)	2H5
	7-74.	Brake Adjustment and Lining Tolerances (Cleveland 30-106)	2H5
	7-75.	Removal and Disassembly of Wheel Brake Assembly (Cleveland 30-106)	2H5

Paragraph		Aerofiche Grid No.
	7-76. Cleaning, Inspection and Repair of Wheel Brake Assembly (Cleveland 30-106)	2H6
	7-77. Assembly and Installation of Wheel Brake Assembly (Cleveland 30-106)	2H7
7-78.	Brake System (B.F. Goodrich 2-1435-2)	2H9
	7-79. Wheel Brake Assembly (B.F. Goodrich 2-1435-2)	2H9
	7-80. Removal and Disassembly of Wheel Brake Assembly (B.F. Goodrich 2-1435-2)	2H9
	7-81. Cleaning and Inspection of Brake Assembly (B.F. Goodrich 2-1435-2)	2H14
	7-82. Repair of Brake Assembly (B.F. Goodrich 2-1435-2)	2H15
	7-83. Assembly and Installation of Brake Assembly (B.F. Goodrich 2-1435-2)	2H16
7-84.	Brake Master Cylinder	2H18
	7-85. Removal of Brake Master Cylinder	2H18
	7-86. Disassembly of Brake Master Cylinder	2H18
	7-87. Cleaning, Inspection and Repair of Brake Master Cylinder	2H18
	7-88. Assembly of Brake Master Cylinder	2H18
	7-89. Installation of Brake Master Cylinder	2H18
7-90.	Parking Brake Valve	2H18
	7-91. Removal of Parking Brake Valve	2H18
	7-92. Disassembly of Parking Brake Valve	2H19
	7-93. Cleaning, Inspection and Repair of Parking Brake Valve	2H19
	7-94. Assembly of Parking Brake Valve	2H19
	7-95. Installation of Parking Brake Valve	2H19
7-96.	Bleeding Procedure	2H19

SECTION VII

LANDING GEAR AND BRAKE SYSTEM

7-1. INTRODUCTION. This section provides instructions for remedying difficulties which may arise in the operation of the landing gear and brake systems. The instructions are organized so that the mechanic can refer to Description and Principle of Operation for a basic understanding of the systems; Troubleshooting for a methodical approach in locating the difficulty; Corrective Maintenance for the removal, repair and installation of components; and Adjustment and Test for the operation of the repaired systems.

7-2. DESCRIPTION AND PRINCIPLE OF OPERATION. The tricycle landing gear system incorporates air-oil oleo type struts that are hydraulically operated and fully retractable with the nose gear retracting aft into the nose section and the main gear retracting inboard into the wing. Doors completely cover the gear when retracted. The nose and outboard main gear doors operate by mechanical linkage and remain open when the gear is extended. The main gear inboard doors operate hydraulically, are controlled by the limit switches opening during gear extension and closing again when the gear has fully extended. To prevent the gear from retracting while the airplane is on the ground, an anti-retraction safety switch located on the left gear upper torque link will not allow the gear actuator lever to move to the gear up position until weight is off the landing gear allowing the strut to extend to within three quarters of an inch of full extension.

The nose gear is steerable through a 28 degree arc by the use of the rudder pedals and an 80 degree arc by the use of differential engine power and brakes. As the gear retracts, the steering linkage is separated and the gear is centered, so that the rudder pedal action with the gear retracted is not impeded by the nose gear operation.

Located on the instrument panel, to the right of the gear selector control, are one red and three green indicator lights. The red light will indicate when the gear is not locked in either the up or down position, and also show when the gear doors are open in flight, but not opened on the ground. The green lights will show when each individual gear is down and locked. There is no indication light when the gear is up and locked. The red light will also show when the inboard gear doors are not completely closed. A warning horn in the cockpit will sound whenever power from one or both engines is reduced below 150 foot-pounds of engine torque when the gear is not in the down locked position. This horn will also sound whenever the landing gear selector handle is in the gear up position while the airplane is on the ground and the master switch is on. If the gear selector handle can be moved to the up position with the airplane on the ground, it is an indication of an improperly adjusted selector mechanism or defective anti-retraction safety switch or selector mechanism. The emergency extension button is also mounted on the pilot's side of the instrument panel just below the oxygen pressure gauge and to the right of the alternate static source selector.

Two means of emergency extension are available. The emergency blowdown system and the hand pump located in the cockpit between the pilot seats, under the floor access panel. The emergency blowdown system is activated by pulling the control ring located between the pilot seats. The remaining gear(s) is (are) extended and locked in place. Besides the emergency blowdown system the gear can also be pumped down. A hand pump under a floor access panel between the pilot seats can be used to extend the gear should the hydraulic pump system fail.

NOTE

If a problem does develop however, and time permits, it is suggested that the hand pump be tried first, because once the emergency extension system is activated, the affected mechanism and hydraulic system must be purged and serviced.

The brakes are hydraulically actuated by individual master cylinders mounted on the left (optional on right) set of rudder pedals. A reservoir, accessible through the access door on the upper right portion of the nose section, supplies fluid to each master cylinder. From these cylinders, hydraulic fluid is routed through lines and hoses to a parking brake valve located on the left aft side of the forward cabin bulkhead, through the cabin and wings, to the brake assemblies on each main landing gear. To operate the brakes, apply toe pressure against the top of the rudder pedal. The parking brake may be actuated by applying toe pressure and at the same time pulling out on the brake handle. To relieve parking brake pressure, apply toe pressure on the pedals and at the same time push in on the parking brake handle.

Servicing of the hydraulic and brake system is found in Section II.

7-3. TROUBLESHOOTING. Mechanical and electrical switch troubles peculiar to the landing gear system are listed in Table VII-V at the back of this section. When troubleshooting, first eliminate hydraulic malfunctions as listed in Section VI. Then proceed to switch malfunctions and last to the mechanical operation of the gear itself, both of which are listed in this section. Always place the airplane on jacks before attempting any troubleshooting of the gear.

7-4. LANDING GEAR SYSTEM.

7-5. NOSE LANDING GEAR SYSTEM.

7-6. DISASSEMBLY OF NOSE GEAR OLEO. (Refer to Figure 7-1.) The nose gear oleo assembly may be removed and disassembled from the gear oleo housing with the gear removed from or installed on the airplane.

a. Place the airplane on jacks. (Refer to Jacking, Section II.)

b. Place a drip pan under the nose gear to catch spillage.

c. Remove air and fluid from the oleo. (Refer to Oleo Struts, Section II.)

d. To remove the complete cylinder and fork assembly from the oleo housing (35), cut the safety wire (44) and remove the cap bolts (37) that attach the steering arm (42) and aligner guide bracket (40) to the top of the oleo cylinder (12).

e. Disconnect the shimmy dampener (27) by removing the bolt assembly (28) that connects the dampener to the cylinder.

f. Release and remove the retainer ring (10) at the top of the housing (35) and pull the complete cylinder assembly from the bottom of the housing. The upper and lower housing bushings (11 and 13) should remain pressed in the housing.

g. To remove the piston tube (26) assembly from the cylinder (12), separate upper and lower torque links (25 and 22) by removing the connecting bolt (24) with washer, nut and cotter pin. Note the spacer washer (23) between the two links.

h. Compress the piston tube (26), and reach up along the tube and release the retainer ring (9) from the annular slot at the bottom of the oleo housing.

i. Pull the piston tube (26) with component parts from the cylinder.

NOTE

Prior to disassembling the upper bearing (2) with retaining pins (1) from the piston tube (26) place a reference mark with a grease pencil from the upper bearing to the piston tube. This will insure proper indexing of parts upon reassembly.

j. The piston tube components may be removed by reaching in the tube and pushing out the upper bearing (2) and retaining pins (1). Slide off the tube, the upper bearing (2), spacer (3), lower bearing (5) with outer and inner O-rings (4 and 6), wiper strip (7), washer (8) and retainer ring (9).

k. To remove the orifice tube (15), remove the large bolt (38) of the orifice tube from the top of the cylinder. Pull the tube from the cylinder (12).

l. The orifice plate (16) is removed from the bottom of the orifice tube by releasing the retainer ring (17) that holds the plate in position.

NOTE

Do not remove the piston tube plug (48), O-ring (47), from the piston tube (26), or the piston tube from the fork (19).

7-7. CLEANING, INSPECTION AND REPAIR OF NOSE GEAR OLEO.

a. Clean all parts with a suitable dry type cleaning solvent.

b. Inspect the landing gear oleo assembly component for the following:

1. Bearings and bushings for excess wear, corrosion, scratches and overall damage.
2. Retaining pins for wear and damage.
3. Lock rings for cracks, burrs, etc.
4. Cylinder and orifice tube for corrosion, scratches, nicks and excess wear.
5. Orifice plate for hole restriction.
6. Fork tube for corrosion, scratches, nicks, dents and misalignment.
7. Air valve general condition.

c. Repair of the oleo is limited to smoothing out minor scratches, nicks and dents and replacement of parts.

d. Individual replacement of wiper strips may be achieved per Paragraph 7-36.

7-8. ASSEMBLY OF NOSE GEAR OLEO. (Refer to Figure 7-1.)

a. Ascertain that parts are clean and inspected.

b. To assemble the orifice tube (15), insert the orifice plate (16) into the bottom of the tube, with the countersunk side of the orifice hole exposed. Secure the plate with the retainer ring (17). Lubricate and install the O-ring (14) on the upper end of the tube.

c. Insert the tube up through the bottom of the cylinder (12). With the tube exposed through the top of the cylinder, install the piston ring (45). Install the bolt (38) finger tight at this time at the top of the cylinder.

d. The fork tube assembly may be assembled by installing the tube components on the tube (26). In order, slide onto tube; retainer ring (9), washer (8), lower bearing (5) with outer and inner O-rings (4 and 6), spacer (3) and upper bearing (2). Align reference marks on upper bearing and piston tube to insure proper indexing of lock pin holes of the upper bearing and piston tube and install pins (1).

NOTE

Refer to Parts Catalog for correct part number when replacing O-rings (4 and 6) and wiper strip (7). Also, if T-rings are to be installed refer to Installation of T-Rings found in this section.

1. PIN, RETAINER
2. BEARING, UPPER
3. SPACER
4. "O" RING, OUTER PACKING
5. BEARING, LOWER
6. "O" RING, INNER PACKING
7. WIPER STRIP
8. WASHER
9. RING, RETAINER
10. RING, RETAINER
11. BUSHING, HOUSING TOP
12. CYLINDER, OLEO
13. BUSHING, HOUSING BOTTOM
14. "O" RING PACKING
15. TUBE, ORIFICE
16. PLATE, ORIFICE
17. RING, RETAINER
18. GREASE FITTING
19. FORK
20. BOLT ASSEMBLY
21. BOLT ASSEMBLY.
22. TORQUE LINK, LOWER
23. WASHER, SPACER
24. BOLT ASSEMBLY
25. TORQUE LINK, UPPER
26. TUBE, PISTON
27. SHIMMY DAMPENER
28. BOLT ASSEMBLY
29. BOLT ASSEMBLY
30. BOLTS AND SAFETY WIRE
31. BRACKET
32. BUSHING
33. STUD, DOOR UPLOCK
34. PLACARD, SERVICE
35. HOUSING, OLEO
36. BUSHING
37. BOLT, CAP
38. BOLT
39. PLUG, FILLER
40. ALIGNER GUIDE BRACKET
41. VALVE, AIR
42. ARM, STEERING
43. PIN, COTTER
44. SAFETY WIRE
45. PISTON RING
46. BUSHING, STEERING
47. "O" RING, PACKING
48. PLUG, PISTON TUBE
49. DELETED
50. BUSHING

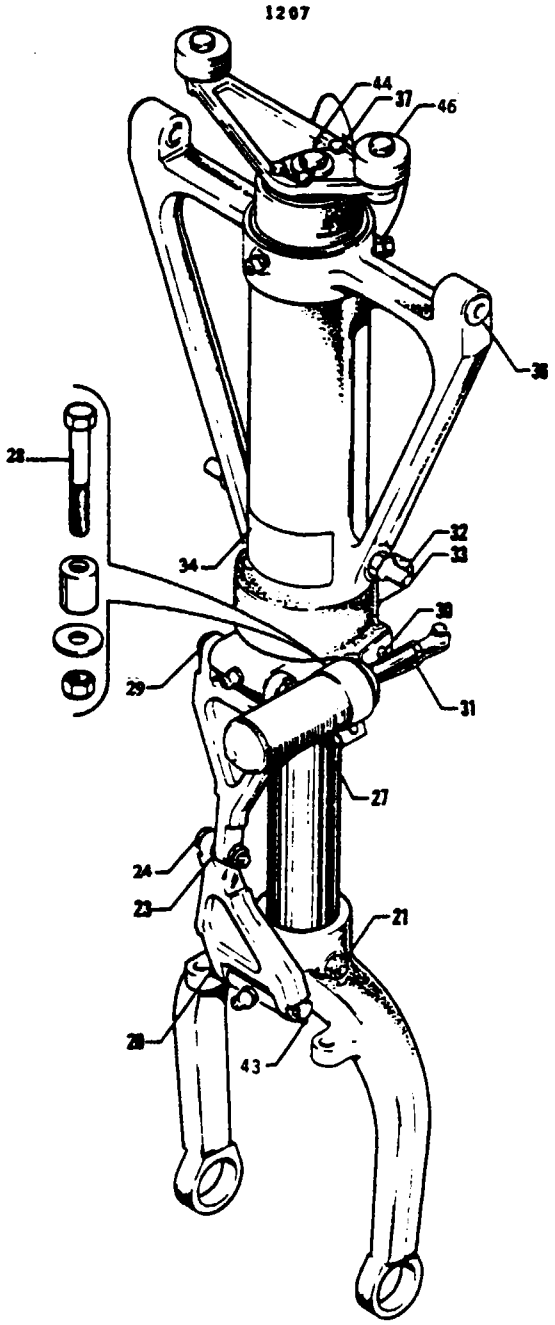

Figure 7-1. Nose Gear Oleo Strut Assembly

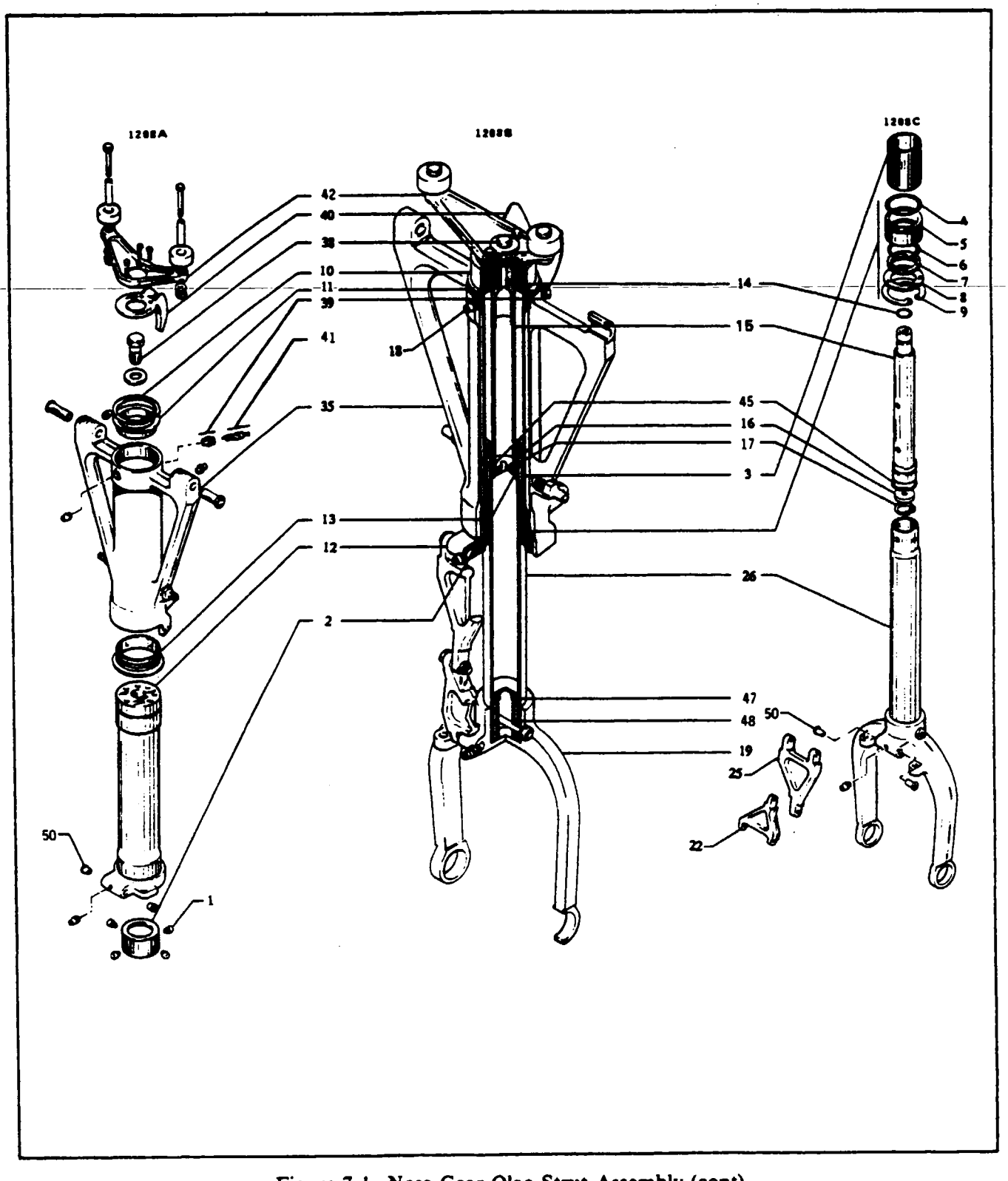

Figure 7-1. Nose Gear Oleo Strut Assembly (cont)

e. Lubricate the inner wall of the cylinder. Carefully, insert the piston tube assembly into the bottom of the cylinder (12), allowing the orifice tube to guide itself into the piston tube, until the retainer ring (9) can be installed in the annular slot at the end of the cylinder. Install the wiper strip (7) and slide the washer (8) into position, and secure the assembly with the retainer ring.

f. At the top of the cylinder (12), tighten the orifice tube bolt (38).

g. Install the upper and lower torque links (22 and 25).

h. Ascertain that the upper and lower oleo housing bushings (11 and 13) are installed. Install the cylinder into the oleo housing and secure with the retainer ring (10).

i. At the top of the oleo housing, install on the cylinder the aligner guide bracket (40) and steering arm (42). Tighten cap bolts (37) 30-35 inch-pounds and safety with MS-20995C40 wire (44).

j. Install the shimmy dampener (27).

k. Lubricate the gear assembly. (Refer to Lubrication Chart, Section II.)

l. Service the oleo strut with fluid and air. (Refer to Oleo Struts, Section II.)

m. Check the nose gear for alignment (refer to Paragraph 7-15) and operation.

7-8a. INSTALLATION OF T-RINGS. (Refer to Figure 7-1a.)

a. Place synthetic sealing ring into groove. Insure that seal is not twisted and that it lies flat in the groove. (Refer to Sketches A and B).

b. Orient each non-extrusion ring so that the radiused corner (if there is one) will be mated to the seal when installed. (Refer to Sketch E).

c. Insert one end of the non-extrusion ring (formed by the scarf cut) into the space between the side of the groove and the side of the seal. (Refer to Sketch E).

d. Work the entire circumference into this space, insuring that the scarf cut of the non-extrusion ring is properly mated. (Refer to Sketch F).

e. Repeat steps c. and d. for the second non-extrusion ring.

f. Spread a few drops of system hydraulic oil evenly around the sealing edge of the packing.

7-9. REMOVAL OF NOSE LANDING GEAR. (Without Emergency Blowdown System) (Refer to Figure 7-2.)

a. Remove right and left nose section side access panels.

b. Remove lower radios and radio shelf.

c. Remove the oxygen cylinder. (Refer to Section XIV.)

d. Remove the heater assembly. (Refer to Section XIII.)

e. Place the airplane on jacks. (Refer to Jacking, Section II.)

f. With the hand pump, retract the nose gear slightly to relieve the gear from its downlocked position.

g. To remove the drag link assembly, the following procedure may be used:

1. Disconnect the gear retraction rod (36) from the upper right drag link (39).
2. Disconnect the lower drag link (41) from the gear oleo housing (44).
3. The upper and lower link assemblies may be removed as one unit by removing the upper drag links (37 and 39) attachment bolts at their attachment plates.

h. With the lower drag link (41) disconnected from the gear housing (44), the gear may be removed by removing the attachment bolt assemblies at the attachment plates (38) on each side of the gear housing. Note, if any, the number and location of spacer washers between the gear housing and attachment plates.

i. The idler link (24) may be removed after the gear operating rod has been disconnected, by the following procedure:

1. Remove the downlock spring (22) and the eye bolt (51) which is attached to the idler link.
2. Disconnect the gear actuating cylinder (25) rod from the link.
3. Remove the link pivot bolt (19) by sliding the bolt out of the link, allowing the head to enter the hole in the side of the limit switch bracket. With the head through the bracket hole, the threaded end of the bolt can continue out of the link.
4. Remove the idler link (24).

C232

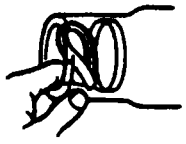

INSTALLATION OF SEALING
RING IN ROD END
SKETCH A

INSTALLATION OF SEALING
RING ON PISTON
SKETCH B

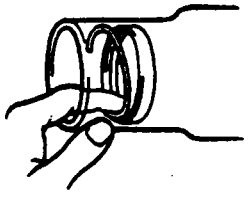

INSTALLATION OF NON-EXTRUSION
RINGS IN ROD END
SKETCH C

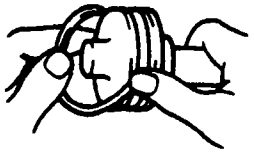

INSTALLATION OF NON-EXTRUSION
RINGS ON PISTON
SKETCH D

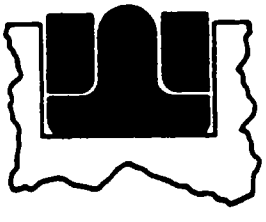

CROSS SECTION OF INSTALLED
T-RING ASSEMBLY
SKETCH E

PROPER MATING OF SCARF
CUT ON NON-EXTRUSION RINGS
SKETCH F

Figure 7-1a. Installation of T-Rings

j. The uplock rod or cable (18) may be removed by removing the bolt assembly (20) from the actuating cylinder support bolt and sliding the rod off the bolt. Retain the bolt in place to support the cylinder.

k. The uplock hook (10) may be removed after the removal of the uplock rod (18) and the hook pivot bolt. Remove the hook with the uplock spring (11).

NOTE

The idler link (24), uplock rod (18) and uplock hook may also be removed with the support tube (17) as one unit.

l. To remove the support tube (17), first remove the up limit switch (15) and wire support clamps. Hold the support nuts within the nose section with a wrench, while removing the bolts. Then remove the support tube.

m. The gear housing (44) attachment plates may be removed by grinding the rivet heads flush with the plate and removing the rivets.

n. The upper drag links (37 and 39) and attachment plates (38) may be removed by holding the attachment nuts within the nose section with a wrench, while removing the support bolts.

7-10. CLEANING, INSPECTION AND REPAIR OF NOSE LANDING GEAR.

a. Clean all parts with a suitable cleaning solvent.

b. Inspect bolts, bearings, bushings and ball joints for excessive wear, corrosion and damage.

c. Inspect the gear housing, drag links, idler links, rods and attachment plates for cracks, bends or misalignment.

d. Inspect the downlock spring for the following:

1. Check for excess wear or corrosion, especially around the lock portion of the spring. The spring must return to complete compression. A spring should be rejected if wear or corrosion exceeds one-quarter the diameter of the spring. Clean away all corrosion and repaint the springs.

2. Check the right and left gear door actuator springs for load tensions below the minimum allowable tolerances. The minimum tension for the actuator springs is 10 pounds at 3 inch extension. If one spring is rejected, replace both springs.

3. Check the downlock spring at the idler link for load tension. The minimum tension is 20.5 pounds at 7.312 inches extension and 47 pounds at 11.312 inches extension.

4. Check the uplock spring at the uplock hook for load tension. The minimum tension is 4 pounds. This check is performed by fastening a fish type scale to the hook and spring and pulling steadily against the hook and spring to get a reading.

e. Inspect the uplock hook for wear and oversized bearing surfaces.

f. Inspect the uplock roller for freedom of movement and minimum wobble.

g. Inspect the uplock rod or cable for corrosion and freedom of movement; also inspect the sliding surfaces of the uplock rod.

h. Check the general condition of limit switches and wiring for fraying, poor connections or conditions that may lead to failures.

i. Attach the upper and lower drag links and check that when stop surfaces touch, linkage is 0.063 to 0.156 inch through center. (Refer to Figure 7-2.) Should this distance exceed the required through-center travel and bolt and bushings are tight, replace one or all drag links.

j. The shimmy dampener requires no service other than routine inspection. In case of damage or malfunction, the dampener should be replaced rather than repaired.

k. Repair to the landing gear is limited to reconditioning of parts, such as replacing bearings and bushings, smoothing out minor nicks and scratches, repainting of areas where paint has chipped or peeled and replacement of parts.

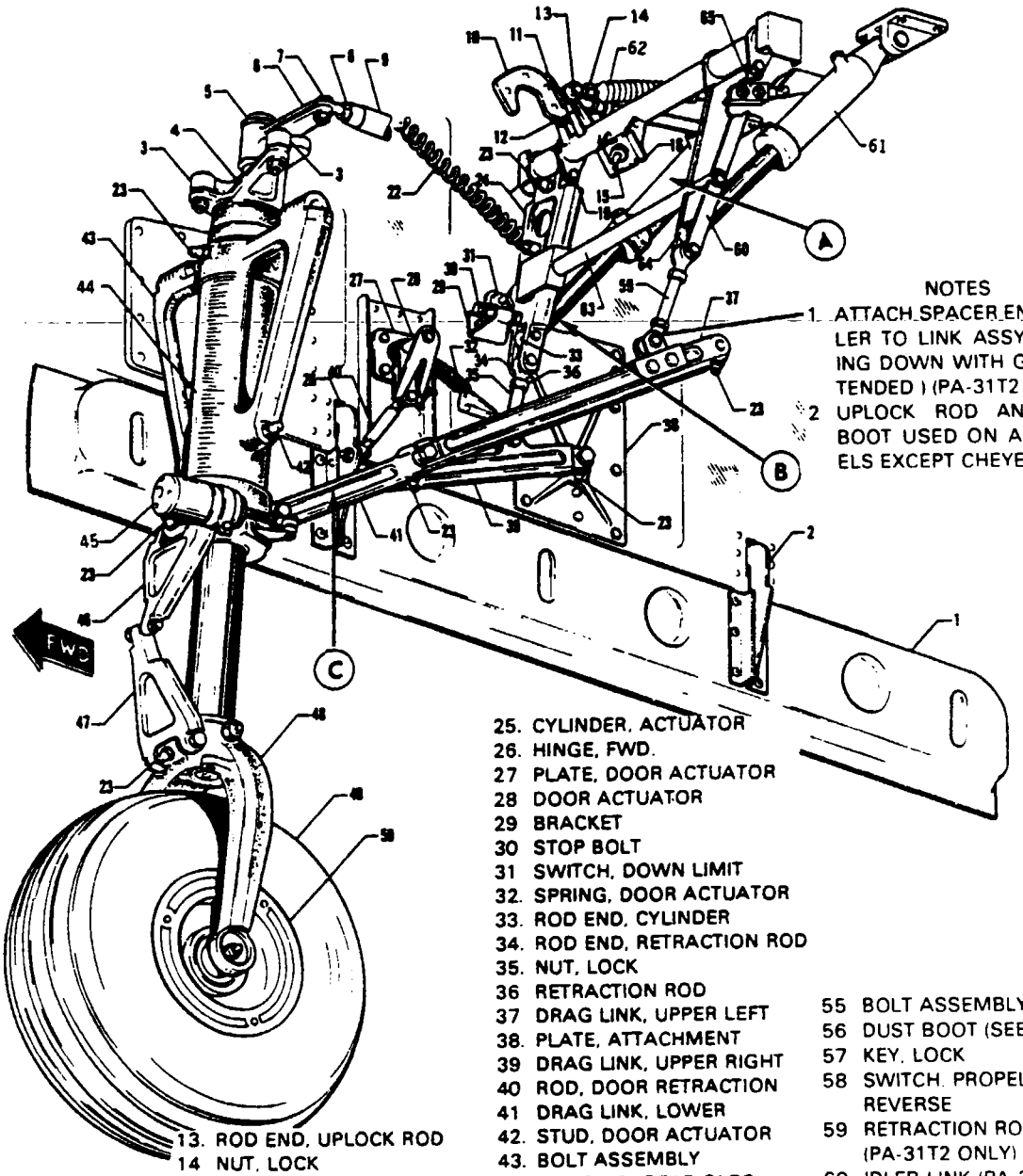

Figure 7-2. Nose Landing Gear Installation

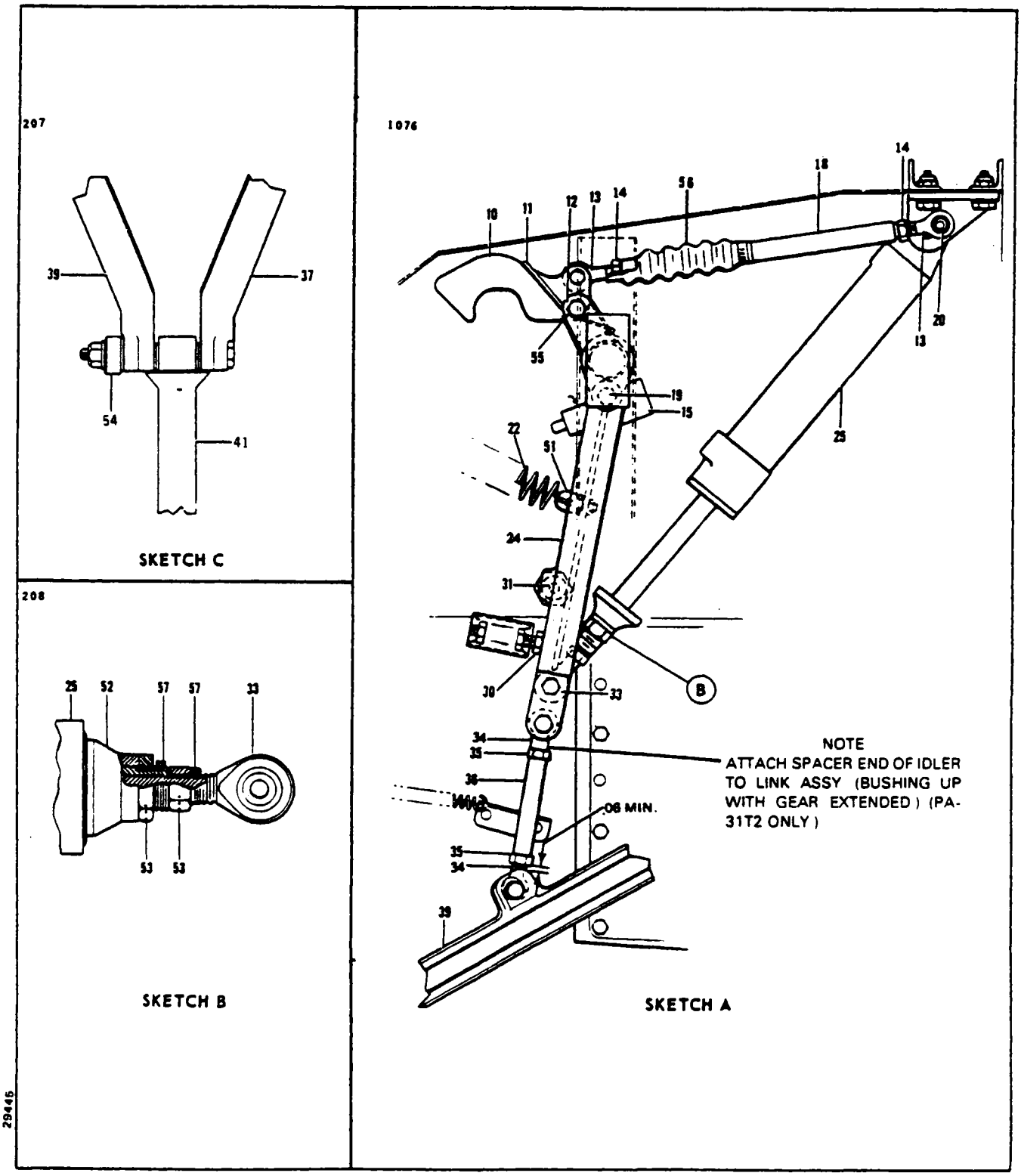

Figure 7-2. Nose Landing Gear Installation (cont.)

7-11. INSTALLATION OF NOSE LANDING GEAR (Without Emergency Blowdown System). (Refer to Figure 7-2.)

NOTE

When assembling any units of the landing gear, lubricate bearings and friction surfaces with a proper lubricant as described in Section II.

a. Position the right and left upper drag link plates (38) and bolt in place.
b. Position the right and left gear housing attachment plates and rivet them in place.
c. Install the support tube (17) and secure. Connect the up limit switch (15) and secure electrical wiring to the tube.

NOTE

The uplock hook (10), uplock rod (18), idler link (24) and retraction rod (36) may be assembled on the support tube as a unit and then installed on the airplane, or each component may be installed individually after the support tube has been installed.

d. The uplock hook (10) with uplock spring (11) may be installed as follows:
1. Place the "U" end of the uplock spring (11) over the back of the hook with the loops toward the back.
2. Spread the spring and snap the loops over the bushing that extends through the hook.
3. Hook the ears of the spring over the aft side of the hook bracket and push the hook forward until the bolt holes in the bracket align with the holes in the hook.
4. Bolt the hook in position and ascertain that it rotates freely with no side play and safety.
e. Install the uplock rod or cable (18) by attaching and securing the proper end to the uplock hook and the other end on the gear actuating cylinder support bolt. Lubricate sliding end of rod per lubrication chart.
f. The idler link (24) may be installed by the following procedure:
1. Align the bolt hole in the link (24) with the lug holes of the support tube (17) and with the down limit switch contact boss to the right.
2. Insert the head of the pivot bolt into the hole in the side of the up limit switch bracket far enough to allow the threaded end of the bolt to be inserted into the tube lug and link. Tighten the nut on the bolt allowing the link to turn free with no side play.
3. Attach the retraction rod (36) and actuating cylinder rod end (33) to the link (24). Do not connect the retraction rod (36) to the link (39) until gear adjustment has been completed.
4. The downlock spring (22) may be attached after gear check and adjustment has been completed.
g. To install the gear housing assembly, position the gear so that the attachment points on the housing align with the attachment plates. If needed, install spacer washers between attachments to allow a minimum amount of side play. Tighten the pivot bolt nuts to a snug fit, allowing the gear to swing free, and safety wire the nuts.
h. The drag links may be installed as follows:
1. Align upper (37 and 39) and lower (41) drag link bolt holes. Install bolt, uplock bearing (54) and secure.
2. Ascertain that the linkage through-center travel is within tolerance.
3. Attach the upper drag links (37 and 39) to the attachment plates, tighten nuts to a snug fit,

allowing the links to swing free, and safety wire the nuts.

4. Attach the lower drag link (41) to the landing gear housing (44) and temporarily install bolt. Secure and safety the bolt after the gear has been adjusted.

5. Manually retract and extend the landing gear several times to ascertain smoothness of operation.

6. Attach the retraction rod (36) to the upper right drag link (39) and adjust the rod to obtain approximately .06 of an inch clearance between the lower locknut (35) and link (39).

NOTE

Ascertain that the locknuts (35) are tightened against the retraction rod (36).

i. Grasp the gear fork (48) and rotate it to determine that there are no gaps existing between the steering arm travel rollers (3) and steering bellcrank (6) which could cause the nose wheel to shimmy. Install rollers (P/N 46783-00; 1.500 dia., P/N 46783-02; 1.620 dia., P/N 46783-03; 1.750 dia., P/N 46783-04; 1.375 dia., P/N 46783-05; 1.420 dia., P/N 46783-06; 1.88 dia.) to establish the proper clearance. Adjustment should be made when there is no load at these points.

j. Lubricate the landing gear assembly. (Refer to Lubrication Chart, Section II.)

k. Check the nose gear for alignment and operation.

7-12. REMOVAL OF NOSE LANDING GEAR. (With Emergency Blowdown System.) (Refer to Figure 7-2.)

a. Remove right and left nose section side access panels.

b. Remove lower radios and radio shelf.

c. Remove ECU assembly. (Refer to Section XIIIA.)

d. Place the airplane on jacks. (Refer to Jacking, Section II.)

e. With the hand pump, retract the nose gear slightly to relieve the gear from its downlocked position.

f. To remove the drag link assembly, the following procedure may be used:

1. Disconnect the gear retraction rods (36 and 59) from the upper right and left drag links (37 and 39).

2. Disconnect the lower drag link (41) from the gear oleo housing (44).

3. The upper and lower link assemblies may be removed as one unit by removing the upper drag links (37 and 39) attachment bolts at their attachment plates.

g. With the lower drag link (41) disconnected from the gear housing (44), the gear may be removed by removing the attachment bolt assemblies at the attachment plates (38) on each side of the gear housing. Note, if any, the number and location of spacer washers between the gear housing and attachment plates.

h. The idler links (24 and 60) may be removed after the gear operating rod has been disconnected by the following procedure:

1. Remove the downlock spring (22) and the eye bolt (51) which is attached to the idler link.

2. Disconnect the gear actuating cylinder (25) rod from the link.

3. Disconnect the emergency gear extender actuating cylinder (61) from the link.

4. Remove the link pivot bolts (19) by sliding the bolt out of the link, allowing the head to enter the hole in the side of the limit switch bracket. With the head through the bracket hole, the threaded end of the bolt can continue out of the link.

5. Remove the idler links (24 and 60).

i. The uplock rod (18) may be removed by removing the nut (20) from the actuating cylinder support bolt and sliding the rod off the bolt. Retain the bolt in place to support the cylinder.

j. The uplock hook (10) may be removed after the removal of the uplock rod (18) and the hook pivot bolt. Remove the hook with the uplock spring (11).

NOTE

The idler links (24 and 60), uplock rod (18), unlock rod (62) and uplock hook may also be removed with the support tube (17) as one unit.

k. To remove the support tube (17), first remove the up limit switch (15) and wire support clamps. Hold the support nuts within the nose section with a wrench, while removing the bolts. Then remove the support tube.

l. The gear housing (44) attachment plates may be removed by grinding the rivet heads flush with the plate and removing the rivets.

m. The upper drag links (37 and 39) and attachment plates (38) may be removed by holding the attachment nuts within the nose section with a wrench, while removing the support bolts.

7-13. INSTALLATION OF NOSE LANDING GEAR. (With Emergency Blowdown System) (Refer to Figure 7-2.)

NOTE

When assembling any units of the landing gear, lubricate bearings and friction surfaces with a proper lubricant as described in Section II.

a. Position the right and left upper drag link plates (38) and bolt in place.

b. Position the right and left gear housing attachment plates and rivet them in place.

c. Install the support tube (17) and secure. Connect the up limit switch (15) and secure electrical wiring to the tube.

NOTE

The uplock hook (10), uplock rod (18), unlock rod (62), idler links (24 and 60) and retraction rod (36) may be assembled on the support tube (17) as a unit and then installed on the airplane, or each component may be installed individually after the support tube has been installed.

d. The uplock hook (10) with uplock spring (11) may be installed as follows:

1. Place the "U" end of the uplock spring (11) over the back of the hook with the loops toward the back.
2. Spread the spring and snap the loops over the bushing that extends through the hook.
3. Hook the ears of the spring over the aft side of the hook bracket and push the hook forward until the bolt holes in the bracket align with the holes in the hook.
4. Bolt the hook in position and ascertain that it rotates freely with no side play and safety.

e. Install the uplock rod (18) by attaching and securing the sliding end to the uplock hook and the other end on the gear actuating cylinder support bolt. Lubricate sliding end of rod per lube chart.

f. The idler links (24 and 60) may be installed by the following procedure:

1. Align the bolt hole in the links (24 and 60) with the lug holes of the support tube (17) and with the down limit switch contact boss to the right.

2. Insert the head of the pivot bolt into the hole in the side of the up limit switch bracket far enough to allow the threaded end of the bolt to be inserted into the tube lug and link. Tighten the nut on the bolt allowing the link to turn free with no side play.

3. Attach the retraction rods (36 and 59) and actuating cylinders (25 and 61), rod ends (33) to the links (24 and 60). Do not connect the retraction rods (36 and 59) to the links (37 and 39) until gear adjustment has been completed.

4. The downlock spring (22) may be attached after gear check and adjustment has been completed.

g. To install the gear housing assembly, position the gear so that the attachment points on the housing align with the attachment plates. If needed, install spacer washers between attachments to allow a minimum amount of side play. Tighten the pivot bolt nuts to a snug fit, allowing the gear to swing free, and safety wire the nuts.

h. The drag links may be installed as follows:

1. Align upper (37 and 39) and lower (41) drag link bolt holes. Install bolt, uplock bearing (54) and secure.

2. Ascertain that the linkage through center travel is within tolerance.

3. Attach the upper drag links (37 and 39) to the attachment plates, tighten nuts to a snug fit, allowing the links to swing free, and safety wire the nuts.

4. Attach the lower drag link (41) to the landing gear housing (44) and temporarily install bolt. Secure and safety the bolt after the gear has been adjusted.

5. Manually retract and extend the landing gear several times to ascertain smoothness of operation.

6. Attach the retraction rods (36 and 59) to the upper right and left drag links (37 and 39) and adjust the rods to obtain approximately .06 of an inch clearance between the lower locknut (35) and links (37 and 39).

NOTE

Ascertain that the locknuts (35) are tightened against the retraction rods (36 and 59).

i. Grasp the gear fork (48) and rotate it to determine that there are no gaps existing between the steering arm travel bushings (3) and steering bellcrank (6) which could cause the nose wheel to shimmy. Bushings (3) are available in several different diameters to establish the proper clearance. Adjustment should be made when there is no load at these points.

j. Lubricate the landing gear assembly. (Refer to Lubrication Chart, Section II.)

k. Check the nose gear for alignment and operation.

7-14. RIGGING AND ADJUSTMENT OF NOSE LANDING GEAR AND EMERGENCY GEAR EXTENSION SYSTEM. (Refer to Figure 7-2.)

NOTE

Use the hydraulic test unit to supply hydraulic pressure for adjustment operations.

a. With the airplane on jacks and gear extended, disconnect door retraction rods (40) and secure the doors in the open position.

b. To facilitate adjustment of the uplock, observe the following steps:

1. Disconnect the lower drag link (41) from the gear oleo housing (44).
2. Disconnect the actuating cylinder rod end (33) from the idler link (24).
3. Disconnect the end of the downlock spring (22) from the idler link (24).
4. Disconnect and slip the boot (56) over the uplock rod end and the locknut (14) back along the rod (18) until the adjustment is complete.
5. On applicable models only, disconnect the emergency actuator (61), emergency idler link rod (59) and emergency idler link (60), and locate them clear of the primary gear extension components.
6. Pull the actuating cylinder barrel (25) down and forward until the actuator attaching bolt is at the bottom of the slots in the attachment bracket (21).
7. Rotate the drag links assembly by hand until the uplock hook (10) engages the uplock bearing (54).
8. With the uplock rod (18) fully extended and the hook (10) resting fully on the uplock roller (54), adjust the rod end (13) until the attaching bolt on the hook (10) can be freely inserted. Remove the bolt and extend the rod end one full turn and lock. Reinstall the bolt and secure.

NOTE

The actuating cylinder (25) and uplock rod (18) attaching bolt (20) must remain in the bottom of the attachment bracket (21) slots during this adjustment.

9. Lubricate uplock rod (18) before placing the boot (56) over the uplock rod end locknut (14) and secure it after the adjustment of nose gear is complete. (Refer to Lubrication Chart, Section II.)

c. Return the drag links to the down position and attach the lower drag link (41) to the landing gear housing (44); secure and safety unless checking the link through its travel.

d. The through travel of the link is checked by using the following procedure:

1. With the gear in the down position and the stop surfaces of the drag links touching, ascertain that the linkage is 0.063 to .156 inches through center.

NOTE

The linkage must not exceed .156 inches through center.

NOTE

A fabricated tool may be constructed to check through-center travel of the drag link assembly while the links are installed on the airplane. (Refer to Figure 7-30.)

2. To use the fabricated tool, ascertain that the gear is in the downlocked position with no hydraulic pressure on the system.

3. Remove the cotter pins that safety the nuts which secure both upper drag links (37 and 39) to their attachment plates (38) and the lower link (41) to the gear housing.

4. Place the tool tube through the elongated hole in the tool plate, and place the tube over and between the upper link attaching nuts.

5. Swing the plate up and against the head of the bolt that connects the upper and lower links. The plate sleeve slides over the nut of the bolt that connects the lower link to the gear housing.

6. Look through the right hole in the plate to ascertain that the center of the bolt is 0.063 to 0.156 of an inch below the centerline on the plate.

7. Remove the tool and reinstall the cotter pins.

e. The retraction rod (36) is adjusted to provide a distinct snap-through action as the idler linkage passes through center.

f. Adjust the idler link stop bolt (30) on the right side of the wheel well so that the idler linkage is .22 to .28 inches through center.

g. Connect the downlock spring (22) to the idler link (24).

h. Extend the actuator cylinder (25) with hydraulic pressure and adjust the rod end (33) until the attaching bolt can be freely inserted. Release pressure and extend the rod end one full turn. Reinstall the bolt and secure. Tighten the rod end locknut.

NOTE

The actuating cylinder attaching bolt must remain at the top of the attachment bracket (21) slot during adjustment.

NOTE

Rod end and stroke control are locked with an NAS559 type locking method. Use the proper technique. (Refer to Figure 7-2, Sketch B.)

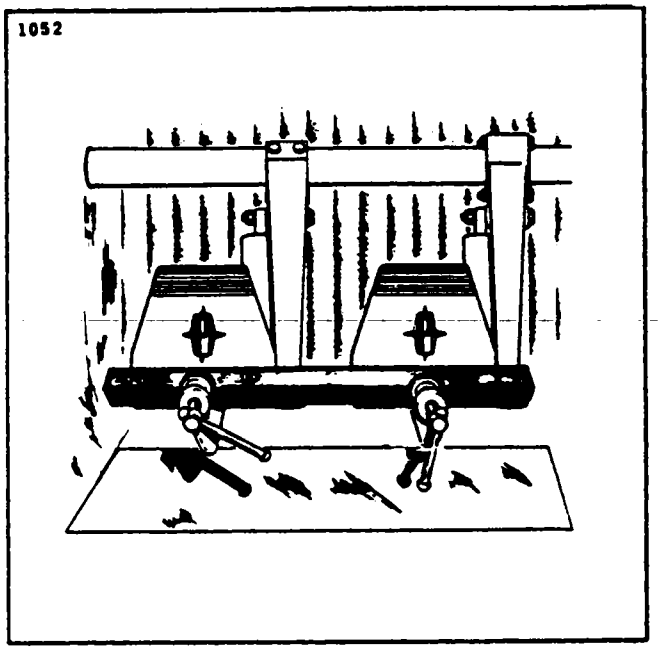

Figure 7-3. Clamping Rudder Pedals in Neutral Position

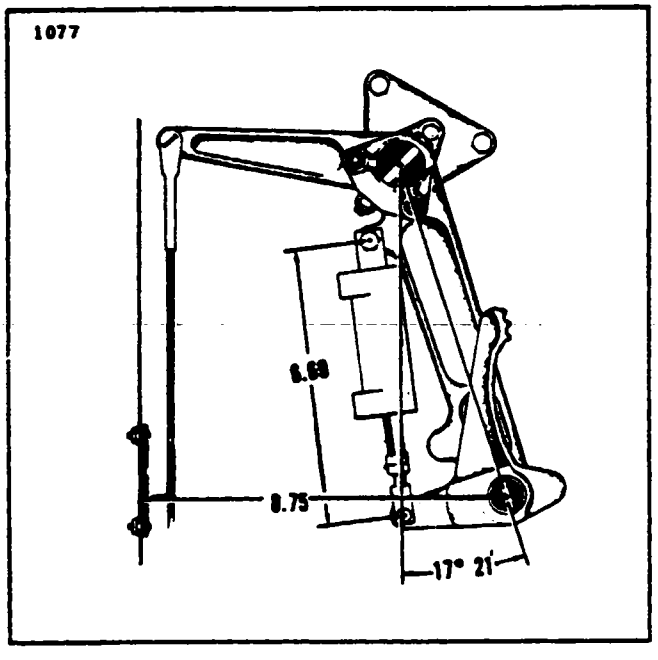

Figure 7-4. Rudder Pedals Neutral Angle

i. Reinstall attaching bolt and secure. Place the key locks (57) between the locknuts (53) and the keyway in the rod. Screw the locknut on the rod and keep the key lock centered in the keyway while tightening the locknuts. Refer to Figure 7-2 which shows the proper installation of the locks on the piston rod end.

j. Adjust "Gear Down" limit switch until green indicator light comes on. Check switch operation by partially retracting and extending gear several times.

NOTE

It may be necessary to partially retract the gear to tighten the locknuts.

k. Retract the gear and adjust the stroke control stop (52) on actuator until the uplock bearing (54) clears the inside of the uplock hook (10) surface by 0.030 to 0.060 of an inch. Adjust the gear up limit switch until the red cockpit light goes out. Tighten the locknut on the stroke control stop. (Refer to Figure 7-2.)

NOTE

Main gear uplimit and inboard gear door switches must be actuated also to extinguish red light.

l. Connect landing gear doors and adjust in accordance with Paragraph 7-19.

m. Retract gear slowly and observe that all parts are operating satisfactorily..

n. If gear fails to remain retracted after the cockpit handle returns to neutral, it will be necessary to readjust one or all of the following until the gear will lock up:

1. Increase the actuator stroke by turning out the stroke control stop.
2. Relieve door "pinch" by lengthening the door operating rods.

3. Delay the actuating of up limit switches.

CAUTION

Check all rod ends for adequate thread engagement.

o. Adjust the propeller reverse switch. (Refer to Paragraph 7-44.)
p. Rigging the emergency gear extension system can be accomplished as follows:

NOTE

Before rigging the emergency landing gear extension system, insure that the primary gear extension system is properly rigged in accordance with instructions given in steps a thru o.

NOTE

Use the hydraulic test unit to supply hydraulic pressure during rigging operations.

1. With the airplane on jacks and gear extended, disconnect door retraction rods (40) and secure the doors in the open position.
2 Connect the emergency idler link (60) and idler rod (59) to the upper left drag link.
3. The retraction rod (59) is adjusted to provide a distinct snap through action as the idler linkage passes through center.
4. Adjust the idler link stop bolt (63) on the left side of the wheel well so that the emergency idler linkage is .22 to .28 inches through center.
5. Extend the emergency actuator (61) to the end of its stroke and adjust the rod end (64) until the attaching bolt can be freely inserted. Install the bolt and secure. Tighten the rod end locknut.

NOTE

It may be necessary to partially retract the gear to tighten the locknuts.

6. Raise the gear until it is up and locked.
7. Disconnect the emergency unlock actuator (65) from the uplock hook (10) and fully extend it. Adjust the rod end until the attaching bolt can be freely inserted into the uplock hook assembly. Extend the rod end one full turn. Reinstall the bolt and secure.

NOTE

Be certain that the emergency unlock actuator piston is not moved at any time during normal gear cycling. Such movement indicates improper rigging.

q. Retract and extend the gear slowly using the primary gear extension system and observe that all parts are operating satisfactorily.
r. Reinstall gear door retraction rods (40).

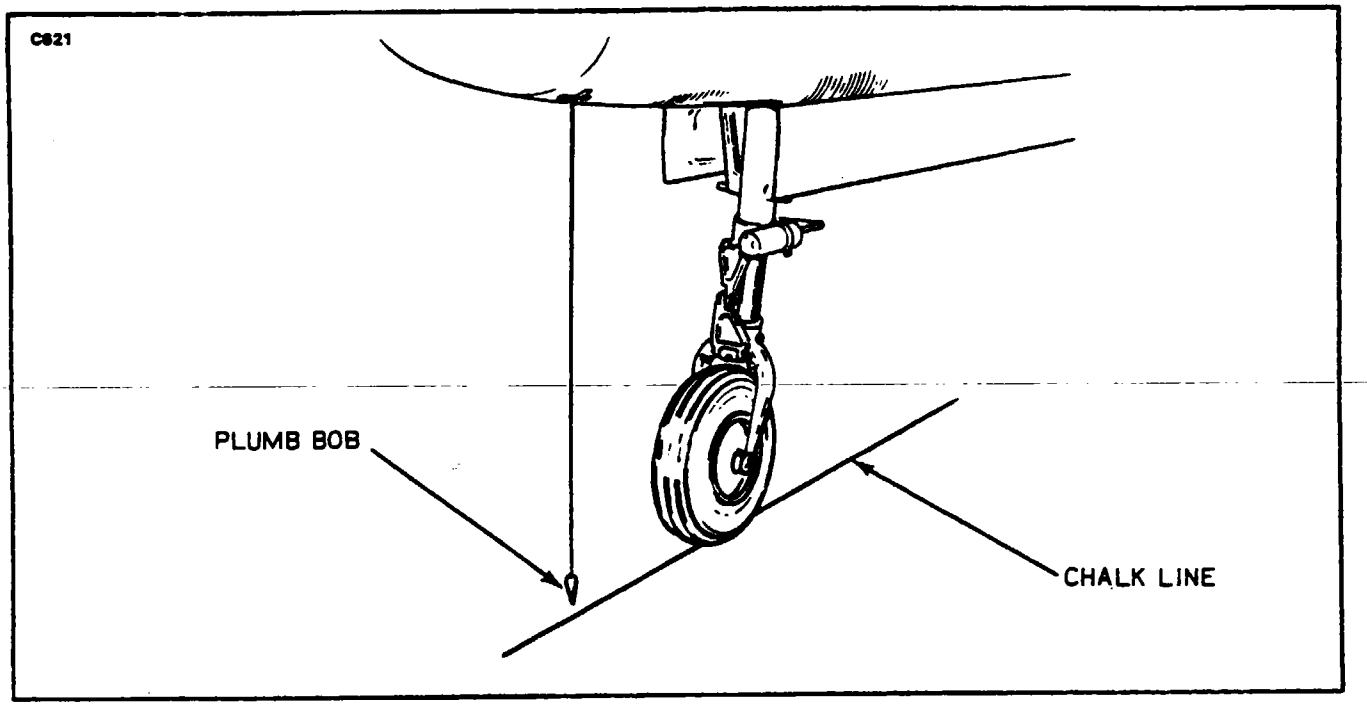

Figure 7-5. Aligning Nose Gear

7-15. ALIGNMENT OF NOSE LANDING GEAR.

a. Place the airplane on a smooth level floor that will accommodate the striking of a chalk line.

b. Place the airplane on jacks. (Refer to Jacking, Section II.)

c. Level the airplane laterally and longitudinally. (Refer to Leveling, Section II.)

d. From the center of the tail skid, extend a plumb bob and mark the contact point on the floor.

e. Extend and attach a plumb bob from a point that is approximately 24 inches forward along the bottom-center row of rivets as measured from the wheel well opening. Mark the point of contact on the floor.

f. Using the two plumb bob marks as a guide, snap a chalk line, extending several feet beyond each mark.

g. Clamp the rudder pedals in neutral position. (Refer to Figure 7-3.)

NOTE

The rudder control system must be properly rigged before aligning the nose gear steering.

h. Adjust the rod end bearings of the steering rod to align the nose wheel with the chalk line. To align the nose wheel straight forward, stand in front of the nose gear and align the center rib of the tire with the chalk line or lay a straightedge along the side of the tire and parallel the straightedge with the chalkline. One end of the rod must be disconnected and jam nuts loosened to make this adjustment. Do not attempt to make the adjustment by means of one bearing, but divide the adjustment between the bearings at each end of the rod. Check that rod ends have sufficient thread engagement, reinstall the rod and secure jam nuts. (Refer to Figure 7-6.)

i. Before checking the nose gear steering travel, disconnect the shimmy damper pushrod from its bracket on the strut housing, and center the nose gear with the centerline of the aircraft. From the intersection formed by the nose tire centerline and wheel pivot point, measure and mark radial lines on the ground surface, at 40° to the left and right of the tire centerline (80° total). Turn the wheel to its maximum travel in both directions to check for allowable travel. Should travel be exceeded in one direction and not enough in the other, check for possible damage to the gear fork, torque links, or steering torque tube.

NOTE

To insure full travel of the nose wheel, make sure no gaps exist at points where the steering arm travel bushings contact with the steering bellcrank. Adjust according to Step i, Paragraph 7-14.

j. Reconnect shimmy damper. If a Gar Kenyon damper is installed, proceed as follows:
1. Rotate the nose gear to its full right tow limit and make sure it is retained in that position.
2. Pull the piston rod of the shimmy damper to its full extension.
3. Adjust the pushrod end bearing until the attachment bolt fits freely through the rod end and bracket.
4. Remove bolt and turn the rod end bearing out one full turn.
5. Bolt the rod end bearing to the bracket.

7-16. REMOVAL OF NOSE GEAR DOOR ASSEMBLY.

a. To remove the gear door, disconnect the retraction rod at the door and remove the hinge bolts at each side of the wheel well.

b. To remove the door retraction mechanism, ascertain that the retraction rod is disconnected; disconnect the downlock spring, and remove the snap ring that holds the retraction mechanism on its support shaft. Pull the retraction mechanism from the shaft.

7-17. CLEANING, INSPECTION AND REPAIR OF NOSE GEAR DOOR ASSEMBLY.

a. Clean all parts with a suitable cleaning solvent.

b. Inspect the door for cracks or bent skin, loose hinge brackets and worn or corroded bearings.

c. Check the retraction mechanism for a worn downlock spring and worn or damaged surfaces.

d. Repair to the door assembly is limited to replacing hinge bearings or rivets and mechanism parts, minor skin repairs and repainting.

7-18. INSTALLATION OF NOSE GEAR DOOR ASSEMBLY.

a. To install the door retraction mechanism, position and bolt the unit in place and connect the downlock spring.

b. The gear door is installed by aligning the bracket bolt hole with the hinge, installing the bolt assembly and securing it. Attach and secure the retraction rod.

7-19. ADJUSTMENT OF NOSE GEAR DOOR.

a. Ascertain that the nose landing gear has been properly adjusted.

b. With gear up and locked, close one door at a time, and adjust door operating rods until bolts can be freely inserted. Shorten rods one full turn of rod end bearings. Do not install bolts.

c. Extend the gear and install door operating rod bolts. Adjust "door open" stop bolts to allow the door linkage to pass 0.060 to 0.120 inches through center.

d. Retract the gear slowly and observe that all parts are operating satisfactorily.

e. If gear fails to remain retracted after the cockpit handle returns to neutral, it will be necessary to readjust one or all of the following items until gear will lock up:
1. Increase the actuator stroke by turning out the stroke control stop.
2. Relieve door "pinch" by lengthening the door operating rods.
3. Delay the actuating of up limit switches.

7-20. REMOVAL OF NOSE GEAR STEERING MECHANISM. (Refer to Figure 7-6.)

a. Remove the left pilot seat and floor panel.

b. Remove the left access panel on the nose section of the aircraft.

c. Remove the lower radios and radio shelf.

d. Remove the oxygen bottle in accordance with instructions given in Section XIV for the PA-31T and PA-31T1.

e. Disconnect the steering cable turnbuckle (22) at station 96.0, also disconnect the rudder cable (14) at the outboard turnbuckle and rudder pedal.

f. Remove the cable guard pins (16) around the pulley at stations 104.0 and 68.0.

g. Disconnect the steering cable ends (23) from the steering sector (2) and draw the cable out of the aircraft.

h. Disconnect the rod end bearings (5) of the steering tube assembly (8) from the arm (1) and the steering bellcrank (3) by removing the hardware.

i. Remove the steering tube assembly (8) from the aircraft. (Refer to Paragraph 7-21.)

WARNING

Do not remove the retainer clips from the tube assembly. This assembly is spring-loaded and should be handled with care. Check lockwire to be sure it is holding the retainer clips in place.

NOTE

Do not rotate rod end bearings (5) unless meant as an adjustment to the nose gear steering.

j. Remove the arm (1), sector (2), shaft (13), and washers (11 and 26) at station 76.38 in the left rear portion of the nose wheel well.

k. To remove the two bracket halves (12), remove the hardware securing the brackets to the longitudinal beam of the aircraft.

7-21. REMOVAL AND INSTALLATION OF STEERING PUSH-PULL TUBE. If the push-pull tube should have to be removed from the airplane for any type of service, the following procedure and warning should be observed:

a. Ascertain that the nose wheel is centered.

b. Remove the nuts and bolts which secure the rod ends of the push-pull tube to the nose gear steering bellcrank and lever assembly.

WARNING

The push-pull tube assembly should be handled cautiously. If it is found to be defective or damaged in any way, it should be replaced with a new assembly. Under no condition should this part be disassembled. There are springs under compression located inside the tube, and the locking clips should not be removed.

c. Install the push-pull tube with the rod toward the forward end of the airplane.

d. Secure the forward end of the push-pull tube to the nose gear steering bellcrank with bolt, washer, nut and cotter pin.

e. Secure the aft end of the push-pull tube to the lever assembly with bolt, washer, nut and cotter pin.

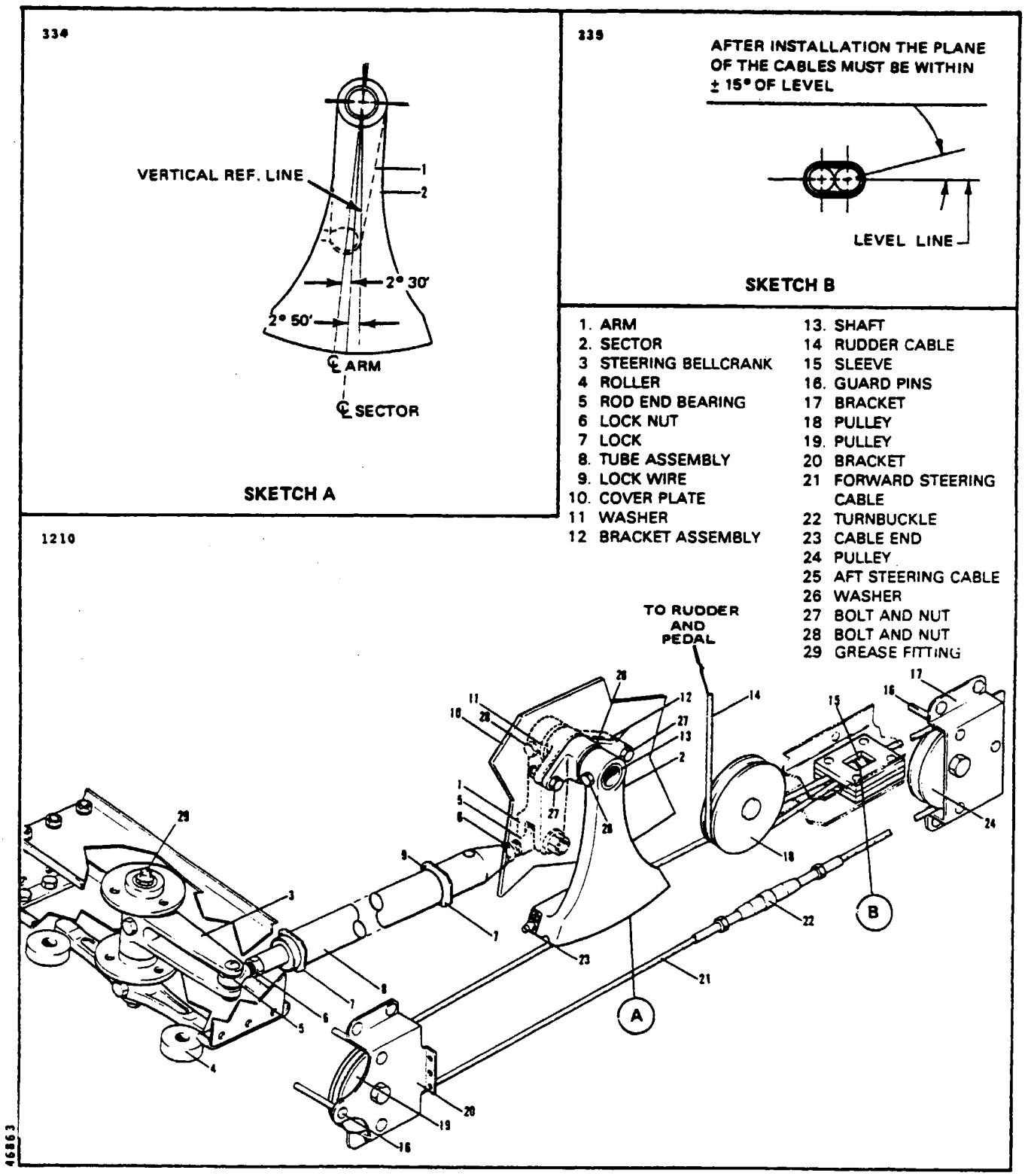

Figure 7-6. Nose Gear Steering Installation

7-22. INSTALLATION OF NOSE GEAR STEERING MECHANISM. (Refer to Figure 7-6.)

a. Install the bracket assembly (12) and secure with the bolts and nuts (27) previously removed. Torque 50 to 70 inch-pounds.

b. On shaft (13) place washers (11 and 26) and assemble the arm (1) if previously separated. Secure with nut and bolt (28). Torque 50 to 70 inch-pounds.

c. Install the shaft and arm into the bracket from the wheel well side of the longitudinal beam.

d. Install the sector (2) on shaft (13), align the holes and secure with the bolt and nut (28). Torque 50 to 70 inch-pounds.

e. Connect the forward steering cable (21) to sector (2) and route the cable around the pulley (19).

f. Connect aft steering cable (25) to sector (2) and route around pulley (24). Connect aft steering cable (25) to forward steering cable (21) at turnbuckle (22).

g. Route the rudder cable (14) around pulley (18) and connect at both ends (refer to Figure 5-9, Sketch A) by means of clevis bolt on the rudder pedal assembly end and turnbuckle on rudder cable end.

h. Rig the rudder (refer to Section V).

i. Adjust the cable tension on the steering cable to 25 pounds. Install all cable guard pins.

j. Adjust the steering tube assembly (8) rod ends to obtain 24.12 inches from the center of the rod end bearing on one end to the center of the rod end bearing on the opposite end.

k. Install the tube assembly (8) with the push-pull rod end toward the nose. Connect the rod ends to the arm and nose gear steering lever with the bolts and nuts previously removed.

l. The nose gear alignment should also be checked in accordance with Paragraph 7-15.

m. If the oxygen bottle was removed, replace in accordance with instructions in Section XIV.

n. Replace any radio equipment removed and install the nose section access panel.

o. Replace the access panel and seat removed from the pilot's compartment.

7-23. MAIN LANDING GEAR SYSTEM.

7-24. DISASSEMBLY OF MAIN GEAR OLEO. (Refer to Figure 7-7.) The main gear oleo assembly may be removed and disassembled from the gear oleo housing with the gear removed from or installed on the airplane.

a. Place the airplane on jacks. (Refer to Jacking, Section II.)

b. Place a drip pan under the main gear to catch spillage.

c. Remove the air and fluid from the oleo. (Refer to Oleo Struts, Section II.)

d. To remove the piston tube (22) assembly from the oleo housing (21), remove the upper and lower torque link connecting bolt assembly (32) and separate the links. Note the number and thickness of spacer washers (35) between the two links (31 and 33).

e. Compress the piston tube (22), reach up along the tube and release the retainer ring (15) from the annular slot at the bottom of the oleo housing (21).

f. Pull the piston tube (22) with component parts from the (housing) cylinder.

NOTE

Prior to disassembling the upper bearing (8) with retaining pins (7) from the piston tube (22) place a reference mark with a grease pencil from the upper bearing to the piston tube. This will insure proper indexing of parts upon reassembly.

g. The fork tube components may be removed by reaching in the tube and pushing out the upper bearing (8) and retaining pins (7). Slide off the upper bearing (8), spacer (9), lower bearing (11) with O-rings (10 and 12), wiper (13), washer (14) and retainer ring (15).

h. To remove the orifice tube (4) from the oleo housing, cut safety wire (39) and remove cap bolt (1) and washer (2) from top of the housing.

i. The orifice plate (5) is removed from the orifice tube by releasing the retainer ring (6) that holds the plate in position.

NOTE

Do not remove piston plug (17) from piston tube (22) or piston tube (22) from fork (24).

7-25. CLEANING, INSPECTION AND REPAIR OF THE MAIN GEAR OLEO. The instructions for cleaning, inspection and repair of the main gear oleo are the same as those given for the nose gear oleo, Paragraph 7-7.

7-26. ASSEMBLY OF MAIN GEAR OLEO. (Refer to Figure 7-7.)

a. Ascertain that all parts are cleaned and inspected.

b. To assemble and install the orifice tube (4) insert the orifice plate (5) into the bottom of the tube, with the countersunk side of the orifice hole exposed. Secure the plate with the retainer ring (6). Lubricate and install the O-ring (3) on the upper end of the tube. Insert the tube up through the bottom oleo housing (21). With the tube exposed through the top of the housing, install washer (2) and tighten the cap bolt (1) finger tight.

c. The piston tube assembly may be assembled to the oleo housing (21) by first installing the tube components on the tube (22). In order, slide onto the tube the retainer ring (15), washer (14), lower bearing (11) with inner and outer O-rings (10 and 12), spacer (9) and upper bearing (8). Align reference marks on the upper bearing and piston tube to insure proper indexing of the lock pin holes of the upper bearing (8) and tube (22) and install retainer pins (7).

NOTE

Refer to Parts Catalog for correct part number when replacing O-rings (10 and 12) and wiper strip (13). Also, if T-rings are to be installed refer to Installation of T-rings found in this section.

d. Carefully insert the piston tube assembly into the oleo housing, guiding the orifice tube (4) into the piston tube until the retainer ring (15) can be installed in the annular slot at the lower end of the housing. Install wiper strip (13), slide washer (14) into position and secure assembly with the retainer ring. At the top of the housing, tighten the cap bolt (1).

e. Install the upper and lower torque links (31 and 33). (Use same thickness spacer washers (35) between the two links as those removed to maintain correct wheel alignment.)

f. Lubricate the gear assembly. (Refer to Lubrication Chart, Section II.)

g. Service the oleo strut with fluid and air (refer to Oleo Struts, Section II) and safety with MS20995C40 wire (39) between the filler plug (20) and cap bolt (1).

h. Check the gear alignment (refer to Paragraph 7-31) and gear operation.

1. BOLT, ORIFICE TUBE
2. WASHER
3. O-RING, PACKING
4. TUBE, ORIFICE
5. PLATE, ORIFICE
6. RING, RETAINER
7. PIN, RETAINER
8. BEARING, UPPER
9. SPACER
10. O-RING GASKET
11. BEARING, LOWER
12. O-RING, PACKING
13. WIPER STRIP
14. WASHER
15. RING, RETAINER
16. GASKET, O-RING
17. PLUG
18. GREASE FITTING
19. VALVE, AIR
20. PLUG, FILLER
21. HOUSING, OLEO
22. TUBE, PISTON
23. BOLT ASSEMBLY
24. FORK
25. PIN, COTTER
26. NUT, AXLE
27. BOLT ASSEMBLY
28. PIN, COTTER
29. BOLT ASSEMBLY
30. BEARING, UPLOCK
31. TORQUE LINK, LOWER
32. BOLT ASSEMBLY
33. TORQUE LINK, UPPER
34. BOLT ASSEMBLY
35. WASHER, SPACER
36. CONTACT, SAFETY SWITCH
37. BUSHING
38. PLACARD, SERVICE
39. SAFETY WIRE
40. SCREW
41. AXLE

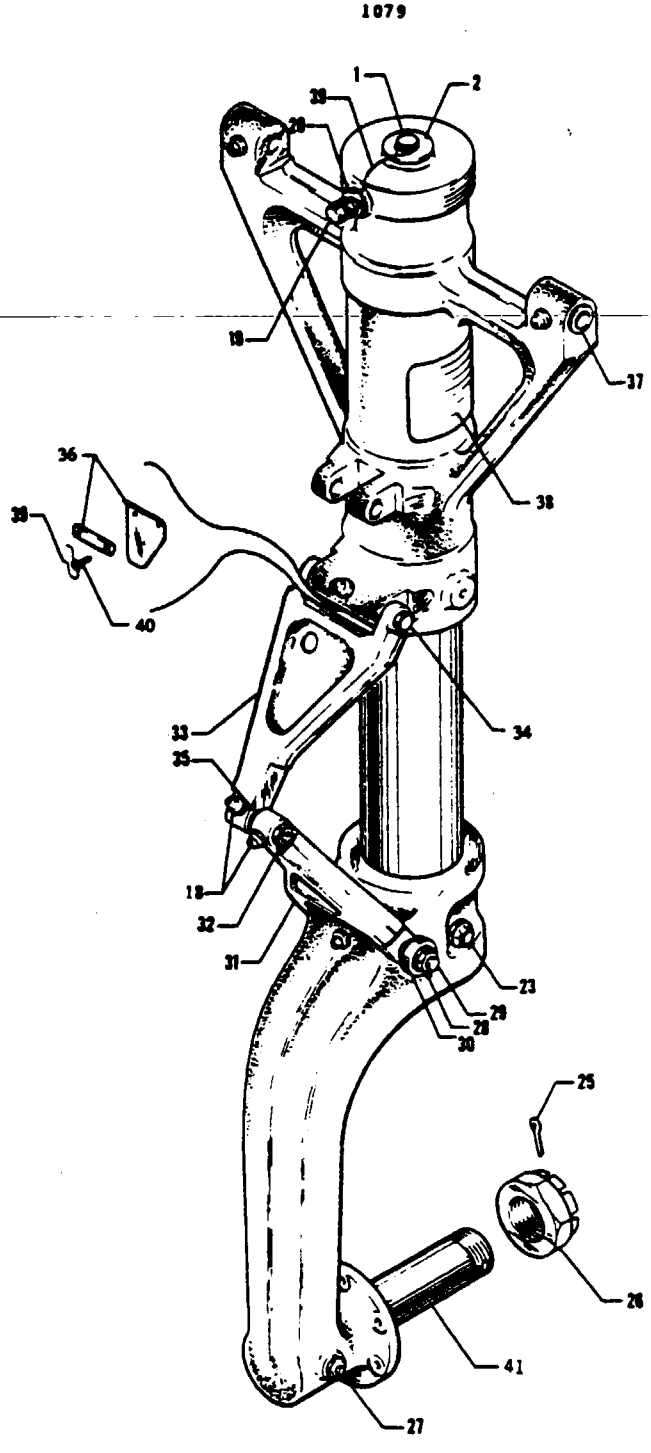

45333

Figure 7-7. Main Gear Oleo Strut Assembly

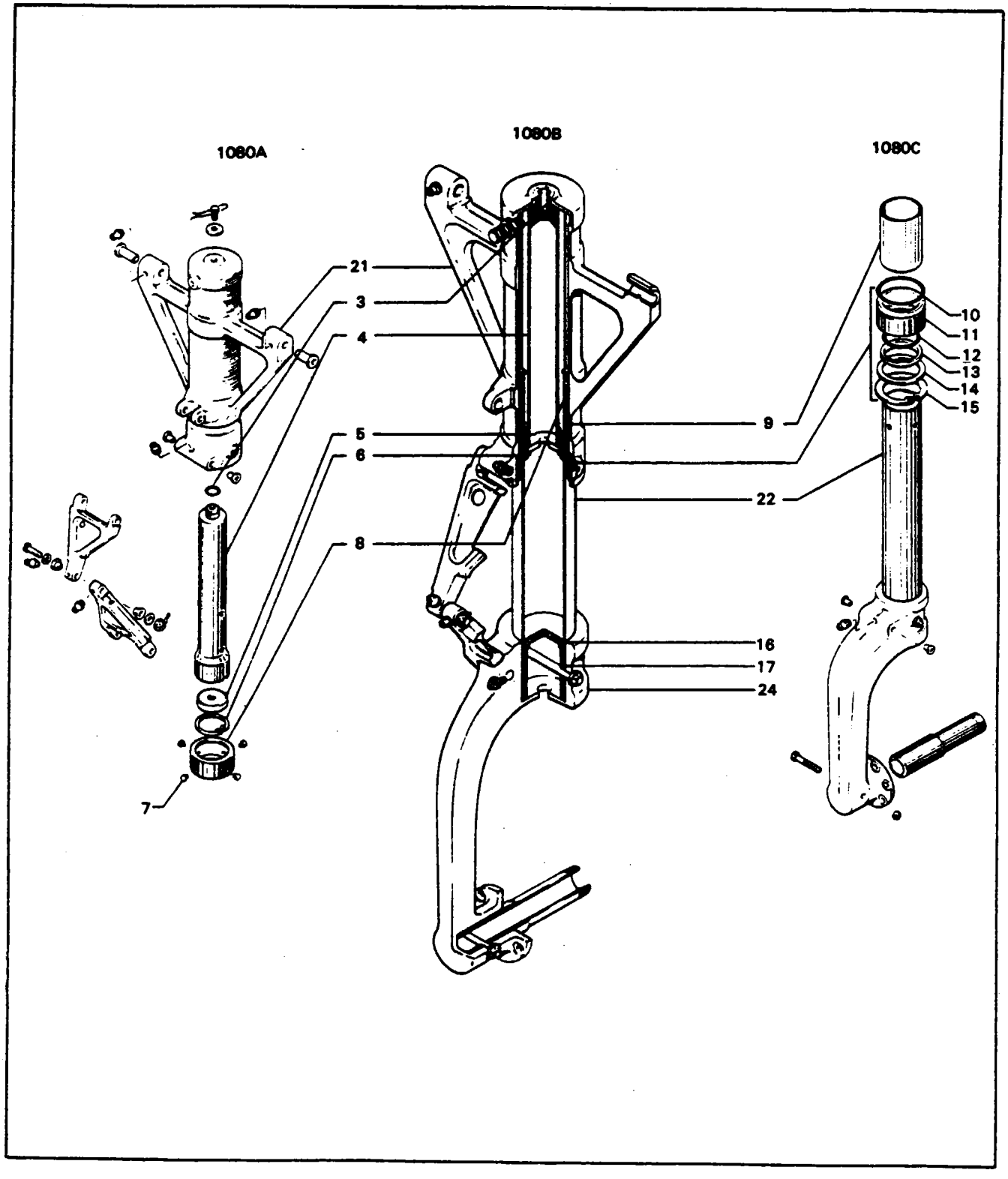

Figure 7-7. Main Gear Oleo Strut Assembly (cont.)

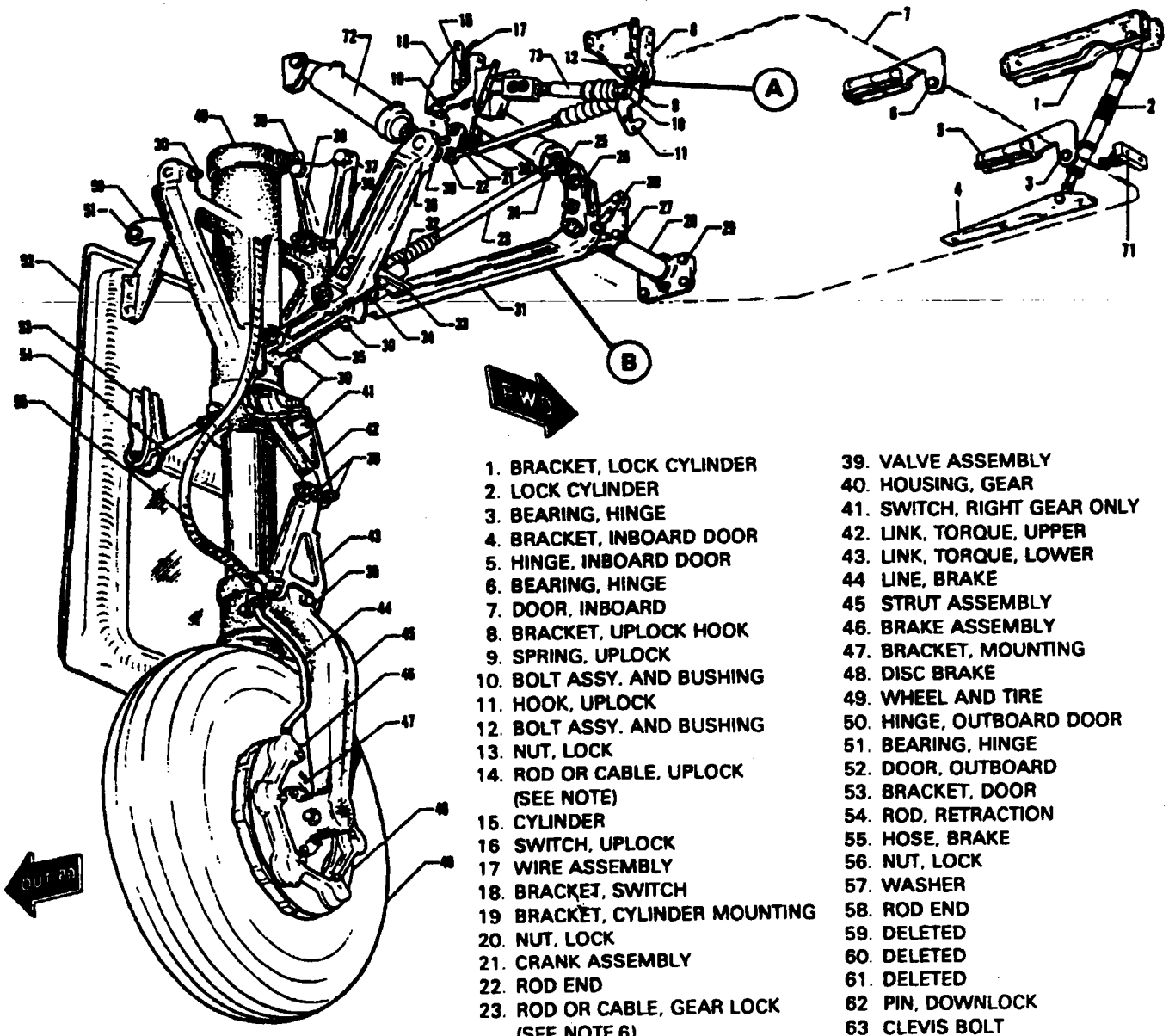

1. BRACKET, LOCK CYLINDER
2. LOCK CYLINDER
3. BEARING, HINGE
4. BRACKET, INBOARD DOOR
5. HINGE, INBOARD DOOR
6. BEARING, HINGE
7. DOOR, INBOARD
8. BRACKET, UPLOCK HOOK
9. SPRING, UPLOCK
10. BOLT ASSY. AND BUSHING
11. HOOK, UPLOCK
12. BOLT ASSY. AND BUSHING
13. NUT, LOCK
14. ROD OR CABLE, UPLOCK (SEE NOTE)
15. CYLINDER
16 SWITCH, UPLOCK
17 WIRE ASSEMBLY
18. BRACKET, SWITCH
19 BRACKET, CYLINDER MOUNTING
20. NUT, LOCK
21. CRANK ASSEMBLY
22. ROD END
23. ROD OR CABLE, GEAR LOCK (SEE NOTE 6)
24. NUT, LOCK
25. ROD END
26. ARM, GEAR RETRACTION
27. PLATE, ATTACHMENT
28. SHAFT
29. FITTING, SHAFT
30. FITTING, GREASE
31. SIDE BRACE, UPPER FWD.
32. SWITCH, DOWNLOCK
33. BRACKET, SWITCH
34. HOOK, DOWNLOCK
35. SIDE BRACE, LOWER
36. SIDE BRACE, UPPER AFT
37 PLATE, MOUNTING
38. BOLT ASSEMBLY
39. VALVE ASSEMBLY
40. HOUSING, GEAR
41. SWITCH, RIGHT GEAR ONLY
42. LINK, TORQUE, UPPER
43. LINK, TORQUE, LOWER
44 LINE, BRAKE
45 STRUT ASSEMBLY
46. BRAKE ASSEMBLY
47. BRACKET, MOUNTING
48. DISC BRAKE
49. WHEEL AND TIRE
50. HINGE, OUTBOARD DOOR
51. BEARING, HINGE
52. DOOR, OUTBOARD
53. BRACKET, DOOR
54. ROD, RETRACTION
55. HOSE, BRAKE
56. NUT, LOCK
57. WASHER
58. ROD END
59. DELETED
60. DELETED
61. DELETED
62 PIN, DOWNLOCK
63 CLEVIS BOLT
64. BUSHING
65. WASHER
66. BOLT, HOOK PIVOT
67 BOLT, AN178-33
68. SPRING, DOWNLOCK
69. DUST BOOT
70. ANTI-ROTATION CLIP
71. DOOR AJAR SWITCH
72. ACTUATING CYLINDER, EMERGENCY GEAR EXTENSION
73. ACTUATOR ROD, EMERGENCY GEAR EXTENSION

NOTE 6
A CABLE IS USED IN PLACE OF THE ROD AND DUST BOOT ON THE PA-31T1, S/N'S 31T-8204001 AND UP, AND ONTHE PA-31T2.

Figure 7-8. Main Landing Gear Installation (1 of 2)

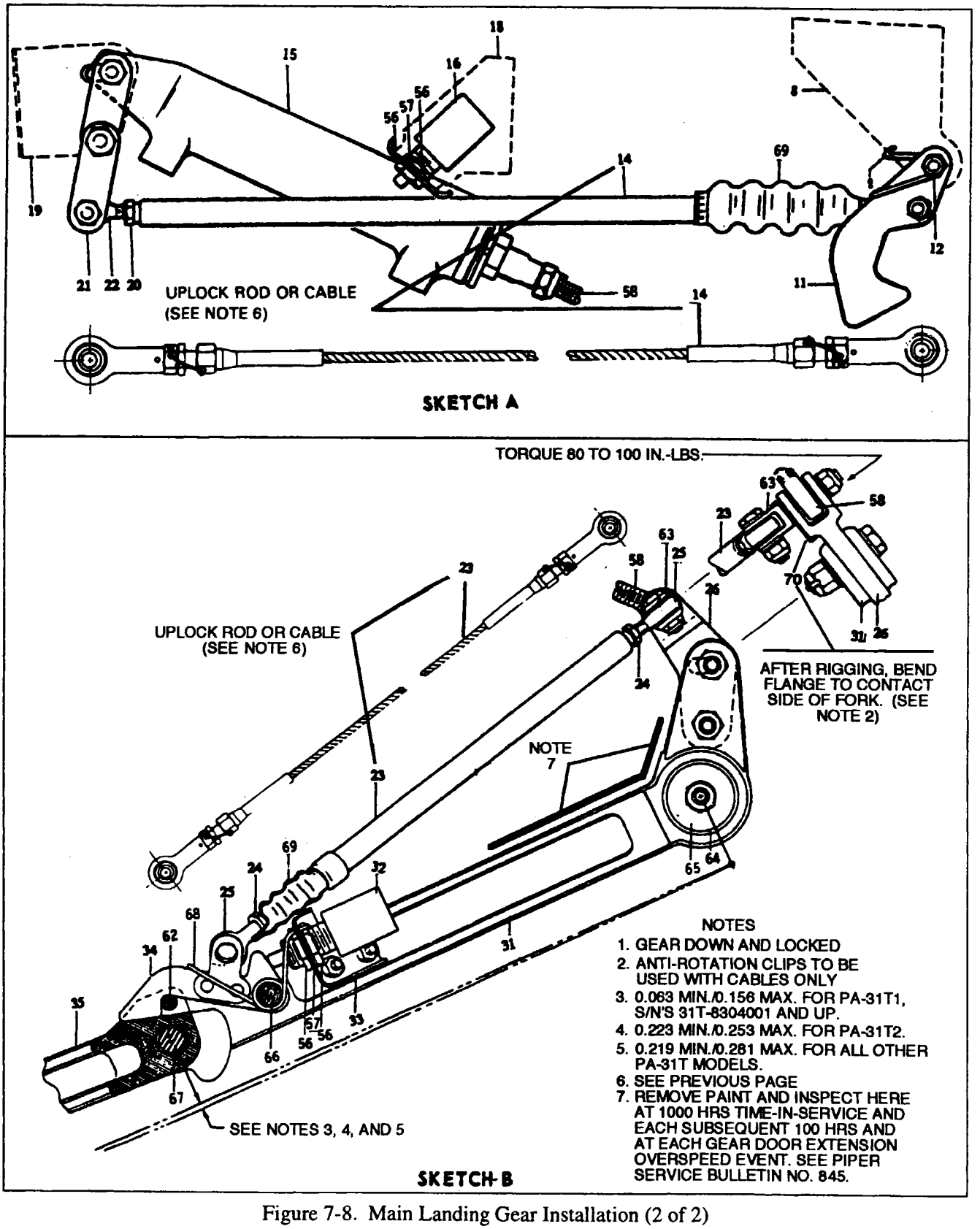

Figure 7-8. Main Landing Gear Installation (2 of 2)

7-27. REMOVAL OF MAIN LANDING GEAR. (Refer to Figure 7-8.)

a. Place the airplane on jacks. (Refer to Jacking, Section II.)
b. Remove the two access plates forward and two access plates aft of the outboard wheel door.
c. With the hand pump, retract the main gear slightly to relieve the gear from its downlocked position and to lower the inboard door (7) out of the way.
d. Disconnect the brake line.
e. To remove the side brace link assembly, the following procedure may be used:
   1. Disconnect the actuating cylinder (15) and downlock rod or cable (23) from the upper side brace link arm (26) by removing the Levis bolt (63). Disconnect the other end of the downlock rod or cable at the downlock hook (34). If the emergency blowdown system is installed, disconnect the emergency actuating cylinder (72) from the upper side brace link arm (26) by removing the clevis bolt (63).
   2. Remove the downlock hook (34) and spring (68) by removing the pivot bolt (66).
   3. Remove the downlock switch bracket (33) and the switch (32) by removing the four screws that attach the bracket between the forward and aft side brace links (31 and 36). Remove the clamps that secure the electrical wiring to the side brace link.
   4. Disconnect the lower side brace link (35) from the gear oleo housing (40) and let the link assembly swing down.
   5. Remove the bolt (67) that connects the upper and lower side brace links.
   6. Disconnect the aft link (36) from its attachment plate.
   7. To remove the forward link (31), remove the nut with washers that is holding the link on its pivot shaft (28). Slide the link from the pivot shaft.
   8. The pivot shaft (28) may be removed by reaching through the pivot shaft bracket access hole, removing the bolt securing the shaft to the shaft fitting (29). Slide the tube through the attachment bracket (27). The shaft fitting (29) is attached with cap bolts, washers and anchor nuts.
f. Disconnect the outboard gear door retraction rods (54) at the gear housing (40). With the lower side brace link (35) disconnected from the housing, the gear may be removed by removing the attachment bolt assemblies at the attachment plates (37) on each side of the gear housing. Note, if any, the number and location of spacer washers between the gear housing and attachment plates.
g. The uplock hook (11) and spring (9) may be removed by disconnecting the uplock rod or cable (14) from the hook and then the hook pivot bolt. If the emergency blowdown system is installed, disconnect the emergency actuator rod (73) from the uplock hook (11).
h. The uplock rod (14) may be removed by disconnecting the rod at the lock crank (21).
i. The landing gear and upper drag link attachment plates may be removed by reaching through the access holes to the nuts that secure the plates. While holding the nuts with a wrench, remove the attachment bolts.

7-28. CLEANING, INSPECTION AND REPAIR OF MAIN LANDING GEAR.

a. Clean all parts with a suitable cleaning solvent.
b. Inspect bolts, bearings, bushings and ball joints for excess wear, corrosion and damage.

WARNING

Refer to the latest revision of Piper Service Bulletin 845 for specific inspection/replacement instructions for the Main Landing Gear Forward Side Braces. See Figure 7-8, Sketch B. Piper considers compliance with Service Bulletins mandatory.

c. Inspect the gear housing, side brace links, idler links, rods and attachment plates for cracks, bends or misalignment.
d. Inspect lock hook for wear and oversized bearing surfaces.
e. Inspect the lock hook springs for the following:
   1. Excess wear or corrosion, especially around the hook portion of the spring. A spring should be rejected if wear or corrosion exceeds one-quarter the diameter of the spring. Clean away all corrosion and repaint the springs.

2. Check the lock hook springs for load tensions below the minimum allowable tolerances. The minimum tension for the uplock hook spring is 4 pounds, and the minimum tension for the downlock hook spring is 7 pounds. These checks are performed by fastening a fish type scale to the particular hook and spring and pulling against the hook and spring to get a reading on the scale.

f. Inspect the uplock roller for freedom of movement and minimum wobble. For S/N's 31T-8304001 thru 31T-8304003 and 31T-1104004 thru 31T-1104017, see Piper Service Bulletin No. 889.

g. Inspect lock rod or cable end bearings for corrosion, damage and freedom of movement. Also inspect the sliding surfaces of the uplock rod.

h. Inspect the general condition of limit switches and wiring for fraying, poor connections or conditions that may lead to failures.

i. Attach the upper and lower drag links and check that when stop surfaces of the two links contact, linkage is 0.219 to 0.281 inch through center. (Refer to Figure 7-8.) Should this distance exceed the required through-center travel and all bolts and bushings are tight, replace one or both side brace links.

j. Repair of the landing gear is limited to reconditioning of parts such as replacing bearings and bushings, smoothing out minor nicks and scratches, repainting of areas where paint has chipped or peeled and replacement of parts.

7-29. INSTALLATION OF MAIN LANDING GEAR. (Refer to Figure 7-8.)

NOTE

When assembling any units, lubricate bearings and friction surface with a proper lubricant as described in Section II.

a. Position the attachment plates of the landing gear housing and upper drag links and bolt them in place.

b. The uplock hook (11) may be installed by the following procedure:
   1. Place the "U" end of the uplock spring (9) over the back of the hook with the loops also toward the back.
   2. Spread the spring and fit the loops over the bushing that extends through the hook.
   3. Slide the hook inboard through the bracket until the bracket hole aligns with the bolt hole in the hook.
   4. Install the pivot bolt and tighten it so the hook will rotate freely, yet without side play.

c. Attach the uplock rod or cable (14) with the sliding end attached to the hook (11) and the other end to the crank fitting (21). If the emergency blowdown system is installed, attach the emergency actuator rod (73) to the hook (11) also.

d. To install the main gear housing assembly, position the gear so that the attachment points on the housing align with the attachment plates (37). If needed, install spacer washers between attachments to allow a minimum amount of end play. Tighten the nut on each pivot bolt to a snug fit, allowing the gear to swing free and safety.

e. The upper and lower side brace link assembly may be installed by the following procedure:
   1. Install the forward upper link pivot tube attachment fitting (29) to the spar, and secure it with cap bolts.
   2. Slide the pivot shaft (28) through the attachment plate (27) and into the attaching fitting (29). Secure the pivot shaft to the attachment fitting.
   3. Ascertain that the forward upper arms (26) are installed on the links (31 and 36). Install the link (31) on the pivot shaft and secure it with washers and nut.
   4. The aft upper drag link (36) may be installed by sliding the link on the aft attachment plate pivot bolt. Tighten the nut to allow the link to swing free with no side play and safety the nut.
   5. Position the lower link (35) between the upper drag link ends; install the bolt assembly and tighten it to allow the link to turn free with no side play.
   6. Attach the lower drag link (35) to the landing gear housing (40); secure and safety. Move the gear in and out of the downlock position several times to determine that there is no binding.

f. Position the downlock switch bracket (33) between the forward and aft upper drag links and bolt it in place.
g. The downlock hook (34) may be installed on the drag link assembly by the following procedure:
   1. Place the "U" end of the downlock spring (68) over the back of the hook (34) with the loop also toward the back.
   2. Spread the spring and fit the loops over the bushing that goes through the hook.
   3. Insert the ends of the spring into the holes located in the downlock switch bracket (33) on each side of the drag link assembly. Push the hook down between the two upper drag links until the bolt holes in the links align with the bushing hole of the hook.
   4. Insert the pivot bolt and on each side of the bushing install spacer washers to maintain a minimum amount of side play. Secure the bolt and safety it.
h. The downlock rod or cable (23) may be installed by bolting the sliding end of the rod or cable to the downlock hook and the other end to the upper drag link arm. at the same time attaching the landing gear actuating cylinder (15). Ascertain lubrication of sliding end of downlock rod or cable (23). If the emergency blowdown system is installed, attach the emergency actuating cylinder (72) to the upper side brace link arm (26)..
i. Lubricate the landing gear assembly. (Refer to lubrication, Section II.)
j. Check the main gear adjustment operation and alignment.

7-30. RIGGING AND ADJUSTMENT OF MAIN LANDING GEAR AND EMERGENCY GEAR EXTENSION SYSTEM. (Refer to Figure 7-8.)

a. With the airplane on jacks and the gear extended, disconnect the inboard and outboard gear door operating rods and keep the doors in the open position.
b. On applicable models only, disconnect emergency actuator cylinder (72) and inboard release cable and locate them clear of the primary gear extension components.
c. Disconnect the downlock rod or cable (23) from the downlock hook (34).
d. The through-center adjustment of the side brace links is accomplished as follows:
   1. Maintain the gear in the downlocked position with both stop surfaces of the side brace links touching.
   2. Ascertain that the linkage is .219 to .282 of an inch through center. (See Note.)
   3. If one side of the stop surfaces does not touch it can be filed to obtain the desired through travel.
   4. The linkage must not exceed .282 inches through center. (See Note.)

NOTE

The downlock hook must be engaged and the retraction arm (located at the top of the forward side brace) must be pulled towards the downlock hook to the limit of its travel for this adjustment.

NOTE

For the PA-31T2, ascertain that the linkage is .223 to .253 of an inch through center. The linkage must not exceed .253 inches through center.

NOTE

A fabricated tool may be constructed to check through-center travel of the side brace link assembly while the links are installed . (Refer to Figure 7-31.)

e. Use the fabricated tool in the following procedure.
   1. The gear is down and locked with no hydraulic pressure on the system.

NOTE

This airplane may be either on or off jacks.

2. Remove the cotter pins that safety the nuts that secure both upper side brace links to their attachment plates.

NOTE

On the right gear only remove the pin at the nut that secures the lower link to the gear housing. Do not remove the nuts.

3. Place the tool tube through the elongated hole in the tool plate and place the tube over and between the upper link attachment nuts.
4. Swing the plate up and against the head of the bolt that connects the upper and lower links. The plate sleeve slides over the nut on the head of the bolt that connects the lower link to the gear housing.
5. Look through the sight hole in the plate to ascertain that the center of the bolt is .219 to .281 of an inch below the centerline on the plate. (See Note.)

NOTE

For the PA-31T1, S/N's 31T-8304001 and up; when looking through the sight hole in the plate, ascertain that the center of the bolt is .063 to .156 of an inch below the centerline on the plate.

NOTE

For the PA-31T2, when looking through the sight hole in the plate, ascertain that the center of the bolt is .223 to .253 of an inch below the centerline on the plate.

6. Remove the tool and reinstall the cotter pins.

f. Operate the downlock hook (34) by hand to determine that it engages freely, and then open and close the joint several times to assure that the hook is operating properly.

g. If the hook operates properly determine proper clearance between the hook (34) and pin (62) by engaging the hook and pushing up on the side brace link assembly, where the upper and lower links hinge until the hook is tight against the pin. This will allow the link stops to separate. Clearance between the stops should not exceed .020 of an inch. If clearance exceeds .020 of an inch and the pin is not worn and the link through travel is within limits, then the hook must be replaced.

h If the hook will not clear the pin, file the inside of the hook until a minimum clearance is reached between the link stops as indicated in step g. Be careful to maintain the new surface parallel with the original surface. Replace the pin if it is worn.

CAUTION

Do not file pin.

i. To replace the pin (62), cut the pin, file off any burrs left by the cut, and drive the pin out from each side.

CAUTION

Do not try to drill the pin out, as this could damage the link.

Install a new pin and flange.

j. With the downlock hook engaged, pull the retraction arm (26) located at the top of the forward side brace towards the downlock hook to the limits of its travel. Also pull the downlock rod or cable (23) out to its full length, and adjust the rod end until the hook bolt can be freely inserted through the hook lugs.

k. Remove the bolt and extend the rod end one full turn; or, one-half turn for PA31T1 S/N's 31T-8304001 and up only. Tighten the locknut and install the attaching bolt.

NOTE

Partially retract and extend the gear several times to see that the downlock is operating properly.

NOTE

Refer to Paragraph 7-37 for adjustment of the landing gear light switches.

l. Pull the retraction arm (26) outboard in its slot and crank assembly (21) inboard in its slot.
m. With the actuator retracted under pressure, adjust the actuator rod end until the fork bolt slips in easily. Turn the actuator rod end in one turn and install the fork bolt.

NOTE

When installing the fork bolt in the actuator rod end, be sure that the forked end is properly aligned with the downlock operating rod.

n. Partially retract the gear; then extend the gear. As the side braces approach the locked position, exert a side force inboard on the wheel so that the hydraulic actuator must force the linkage into the locked position. If the gear fails to lock, adjust the actuator rod end inward in half turn increments until the gear locks down against the side load.
o. Adjust the uplock hook using the following procedure:
   1. Disconnect the uplock rod or cable (14) from the hook.
   2. Retract the gear, being careful to keep the rod clear of moving parts.
   3. As the uplock roller approaches the hook, operate the hook by hand until the roller is engaged.
   4. Maintain pressure on the actuator to assure that the uplock crank is in its proper position. Pull the uplock rod or cable out to its full length, and adjust the rod end until the bolt can be freely inserted. Turn the rod end out one to three (1 to 3) full turns for rods; or, one-half turn for cables; and install the bolt and spacer. Tighten the locknut on the rod end.
   5. Adjust actuator rod end until uplock roller clears inner hook surface by .03 to .06 of an inch when piston is bottomed. This adjustment will require several adjustments because of deflection in the linkage.
   6. Increase the hydraulic pressure until the landing gear selector handle returns to its neutral position. This will indicate that the gear is hanging on the uplock hook.

NOTE

It will be necessary in order to extinguish the red light, to actuate the opposite main gear and nose gear up limit switches together with the inboard gear door closed switches.

   7. Operate the gear through several cycles to assure that all parts are operating satisfactorily.

CAUTION

Be sure that all rod ends have sufficient gripping thread by determining that a wire will not go through the check hole in the rod.

p. Adjust inboard and outboard main landing gear doors. (Refer to Paragraph 7-35.)
q. Adjust landing gear safety switch. (Refer to Paragraph 7-43.)
r. Rigging the emergency gear extension system can be accomplished as follows:

NOTE

Before rigging the emergency landing gear extension system, insure that the primary gear extension system is properly rigged in accordance with instructions given in steps a thru r.

   1. With the airplane on jacks and gear extended, disconnect door operation rods and secure the doors in the open position.
   2. Extend the emergency actuator to the end of its stroke and adjust the rod end until the attaching bolt can be freely inserted. Install the bolt and secure. Tighten the rod end locknut.
   3. Raise the gear until it is up and locked.

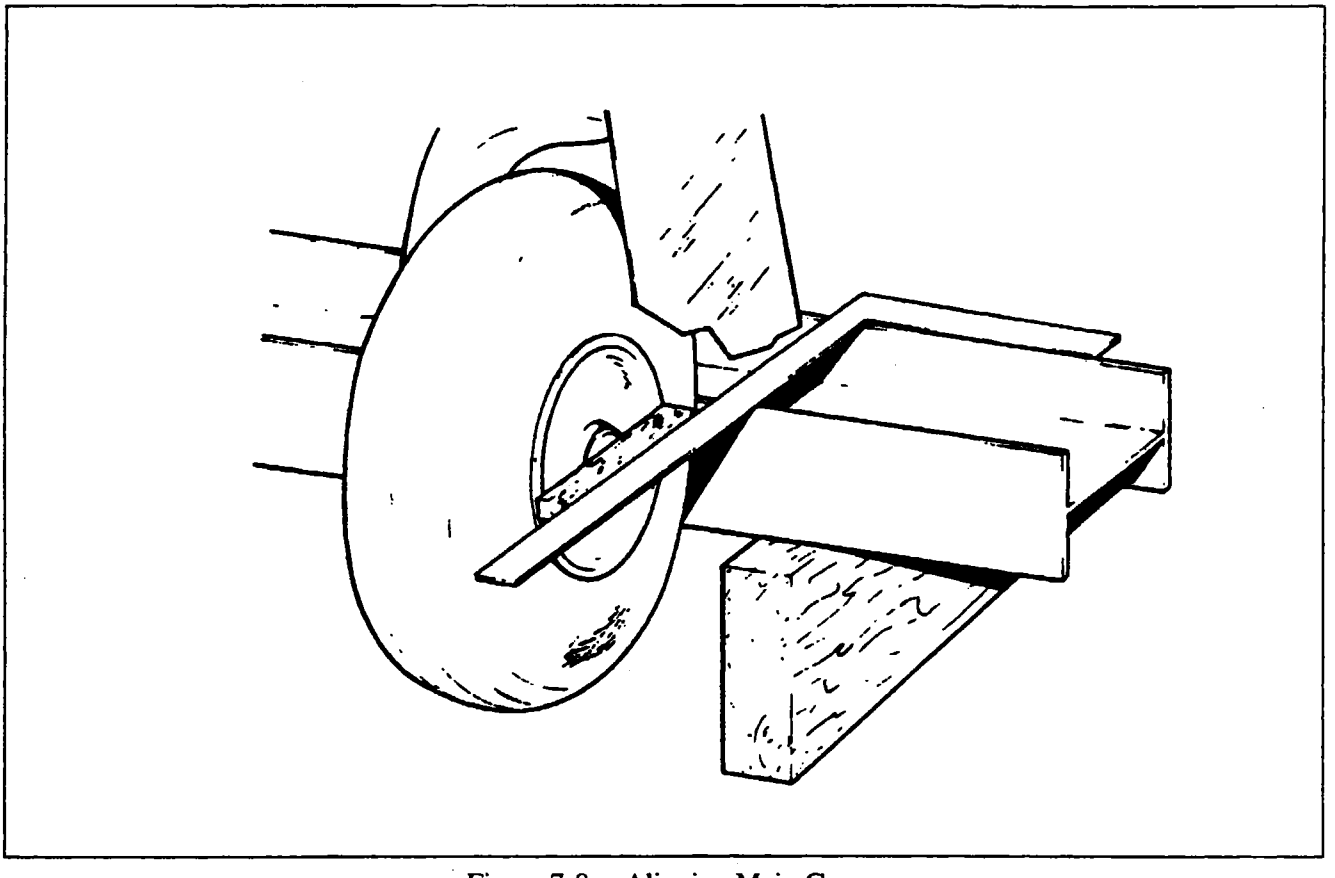

Figure 7-8a. Aligning Main Gear

4. Disconnect the emergency unlock actuator from the uplock hook and fully extend it. Adjust the rod end so the bolt can be freely inserted into the unlocking assembly. Remove the bolt and extend the rod end one full turn. Reinstall the bolt and secure.

NOTE

Be certain that the emergency unlock actuator piston is not moved at any time during normal gear cycling. Such movement indicates improper rigging.

5. Retract and extend the gear slowly using the primary gear extension system and observe that all parts are operating satisfactorily.
6. Connect the inboard and outboard door operating rods.

7-31. ALIGNMENT OF MAIN LANDING GEAR. The following steps should be completed prior to checking and/or adjusting main wheel alignment:

a. Ascertain that the airplane is parked on a level surface.
b. The full weight of the airplane must be on the landing gear.
c. Roll the airplane a minimum of two main wheel revolutions by the use of the tow bar. Move the airplane in a straight line. This will stabilize the landing gear position.

The remaining steps cover alignment procedures:

d. Place a straightedge no less than fifteen feet long across the front of both main landing gear wheels. Butt the straightedge against the tires at the hub level of the landing gear. Ascertain that the straightedge is the same distance from the forward side of the axle hubs. Devise a support to hold the straightedge in position. (Refer to Figure 7-8a.)

e. Fabricate a spacer block per dimensions given in Figure 7-32, and place this spacer block against the wheel rim at the hub line, with the wide end of the spacer towards the front of the wheel. (Refer to Figure 7-8a.)

NOTE

The fabricated spacer block has been laid out to give the proper toe-in of .5 degrees.

f. Set a square against the straightedge and spacer block, and check to see if its outstanding leg bears against the spacer block.

NOTE

A carpenter's square, because of its especially long legs is recommended for checking the main landing gear wheel alignment.

g. If a gap appears at the rear, between the block and square, the wheel is toed-out and must be realigned. If a gap appears at the forward end between the block and the square, the wheel has too much toe-in and must be realigned to get .5 degree toe-in.
h. To correct toe-in or toe-out conditions, remove the bolt connecting the upper and lower torque links and remove or add spacer washers to move the wheel in the desired direction and reinstall the bolt.
i. Recheck wheel alignment. If the alignment is correct, safety the castellated nut with a new cotter pin. If the misalignment still exists, separate the torque links and add or remove a spacer washer. Limit the number of spacers installed to allow for installation of the cotter pin in the bolt.

7-32. REMOVAL OF MAIN GEAR DOOR ASSEMBLY.

a. To remove the outboard gear door, disconnect the retraction rods from the door and remove the hinge bolts.
b. To remove the inboard gear door, place the airplane on jacks and retract the gear enough to allow the door to open. Disconnect the actuating cylinder rod and remove hinge bolts.

THIS SPACE INTENTIONALLY BLANK

7-33. CLEANING, INSPECTION AND REPAIR OF MAIN GEAR DOOR ASSEMBLY.

a. Clean all parts with a suitable cleaning solvent.

b. Inspect the outboard or inboard doors for cracks or bent skin. Loose hinge brackets and worn or corroded bearings.

c. Repair to the door assemblies is limited to replacing hinge bearing, brackets or rivets, minor skin repairs and painting.

7-33a. INBOARD DOOR HINGE INSPECTION.

a. For S/N's 31T-7804001 thru 31T-8004040 and 31T-400002 thru 31T-8020076: Each 100 hours, inspect the Inboard Door Hinge for cracks as specified in Piper Service Bulletin No. 682, unless the installed hinge is steel (check with magnet) or replacement hinge assembly P/N 47529-32 has been installed.

b. Hinge assembly P/N 47529-32 can be readily identified by the P/N 46652-2 in raised letters on the hinge forging.

c. If the hinge is steel or the replacement hinge assembly has been installed, no inspection is required.

7-34. INSTALLATION OF MAIN GEAR DOOR ASSEMBLY.

a. The inboard gear door is installed by aligning the hinge bracket holes with the bearings, installing the bolt assembly and securing it. Install the actuating cylinder rod to the door.

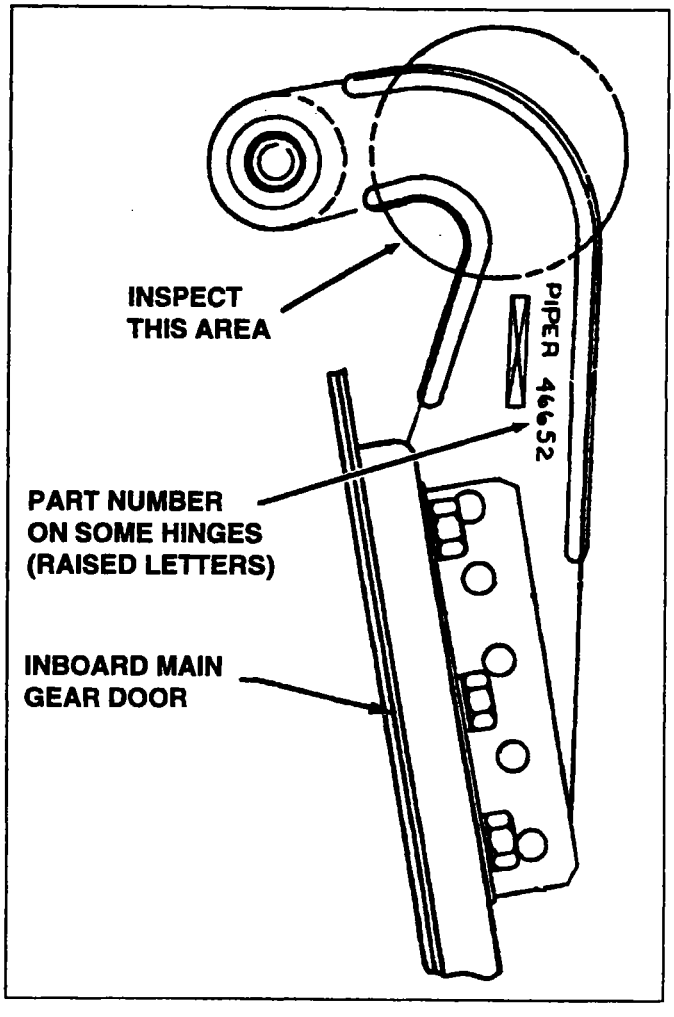

Figure 7-9. Inboard Main Gear Door Hinge

b. The outboard gear door is installed by aligning the hinge bracket holes with the bearings, installing bolt assemblies and securing them. Attach the actuating rods between the door and landing gear housing.

7-35. ADJUSTMENT OF MAIN GEAR DOORS.

a. Ascertain that the main landing gear has been properly adjusted.

b. Adjust outboard door rods to their maximum length and bolt them to the bosses on the gear housing. Retract the gear and observe the amount of gap. Shorten rods by several turns of the rod ends and retract the gear again. Repeat until the door closes properly.

CAUTION

Damage to the door may result if rods are too short.

c. Adjust the inboard door using same procedure as used for the outboard door.

NOTE

Should it be necessary to fit new doors or refit the present doors, maintain a gap of approximately 0.062 of an inch, except at the hinge side, between the door and the skin surface of the wing. A gap of approximately 0.093 of an inch should be maintained at the hinge side of the door.

7-36. REPLACEMENT OF WIPER STRIP ON LANDING GEAR STRUTS.

a. Place the airplane on jacks. (Refer to Jacking, Section II.)

b. Jack the airplane only high enough to take weight off the gear.

c. Release the air pressure from the strut by depressing the valve core pin until the pressure has diminished.

d. Using snap ring pliers, disengage the snap ring from the annular slot in the oleo housing and allow it to lay at the lower end of the piston tube along with the wiper strip retainer washer.

e. Remove the old wiper strip from the housing, and clean and inspect the housing to determine that no pieces remain in it.

f. Wipe the piston tube and check it for any abrasions which may damage the new wiper. Polish the tube to remove any abrasions found.

g. A new wiper strip should be cut with a 30 degree bevel, a little longer than needed, to circle the piston tube.

h. Insert the new wiper strip up into the oleo housing with the tapered edge down. Slide the retainer washer and snap ring up the piston tube, and insert them into the oleo housing. Using snap ring pliers to compress the snap ring, install it into the annular slot in the oleo housing.

i. Inflate the oleo strut in accordance with instructions given in Oleo Struts, Section II, and remove the airplane from the jacks.

7-36a. EMERGENCY EXTENSION SYSTEM. A mechanically actuated pneumatic emergence extension system is incorporated into the landing gear system of the PA-31T2. Pressure for emergency extension of the gears is provided by four sealed, disposable gas storage cylinders (one for each main gear and two for the nose gear). These cylinders are located beneath an access cover on the cabin floor between the pilot's and copilot's seats.

7-36b. REMOVAL OF GAS STORAGE BOTTLES.

a. To remove the gas storage bottles, gain access to the extender installation cover plate (beneath the access plate between the pilot's and copilot's seats).

b. Remove the screws which retain the gas storage bottle to the cover plate.

c. Remove gas storage bottle.

7-36c. TESTING AND INSPECTION OF GAS STORAGE BOTTLE. The bottles should be weighed every 1000 hours to determine if they have developed any leakage. The satisfactory weight of one bottle is stamped on the side of the bottle. If the bottle should fall below this weight, it should be replaced.

7-36d. TESTING EMERGENCY GEAR SYSTEM FOR OPERATIONS AND LEAKS.

This test procedure should be used whenever the system has been opened for any service and at each 1000 hour inspection, to insure system operation and integrity. To perform this test a special fitting must be fabricated and installed in place of the gear storage bottles. (Refer to Figure 7-9a.) Also needed is a source of nitrogen gas such as an industrial 3000 psig. cylinder along with regulator, pressure gauge, control valves and lines. (Refer to Figure 7-9a for suggested hookup and equipment.)

a. Place the airplane on jacks. (Refer to Section II.)

b. Remove one of the nose gear emergence extension gas storage bottles.

c. Remove both of the main gear emergency extension gas storage bottles.

d. Install the fabricated test fitting into one of the open discharger assemblies. Insure that the test valves shown in Figure 7-9a are closed.

e. Cycle the landing gear up hydraulically and insure the landing gear selector handle is in the up neutral position.

f. With the 3000 psig. nitrogen cylinder attached to the test fitting, adjust the cylinder regulator to 1000 psig.

g. Open the discharge valve on the test rig and insure that the particular landing gear extends properly and that there is no mechanical interference during the extension cycle.

NOTE

The main gear will contact the inboard gear doors during the extension cycle, however these doors should not significantly impede the main gear extension. The main gear must not "hangup" on the main gear doors. Should interference be evident, the inboard gear door unlocking mechanism is improperly adjusted. (Refer to rigging instructions .)

h. Close the discharge valve on the test rig and note the trapped pressure on the test gauge.
i. After two minutes the pressure trapped in the system must not decrease by more than 50 psig. (950 psi. min.). Should pressure decrease below this limit check entire system for leaks. Make repairs and retest.
j. Perform Steps d thru i on the other two remaining landing gear emergency extension systems.
k. Upon completion of this test open the vent valve then remove all test equipment and reinstall the gas storage bottles and secure in place.

CAUTION

Exercise care not to accidentally fire the bottles when installing them.

l. Ascertain that all landing gears are down, locked and the selector handle is in the down neutral position prior to removing the airplane from jacks. (Refer to Section II.)

7-36e. INSTALLATION OF GAS STORAGE BOTTLE.

NOTE

If the nose gear emergency extension system has been utilized, both nose gear gas storage bottles must be replaced.

a. Insert gas storage bottle in gear extender installation.
b. Secure bottles in place with screws.

CAUTION

Exercise care not to accidentally fire bottles when installing them.

7-36f. REMOVING PRESSURE FROM LINES AFTER ACTIVATION OF SYSTEM. After activation of one of the bottles, the emergency gear extension system pressure must be removed from the line. This may be accomplished by cracking any appropriate fitting of the system.

NOTE

If the flared fitting connections on the gas storage bottles assembly are broken the seco seal must be replaced.

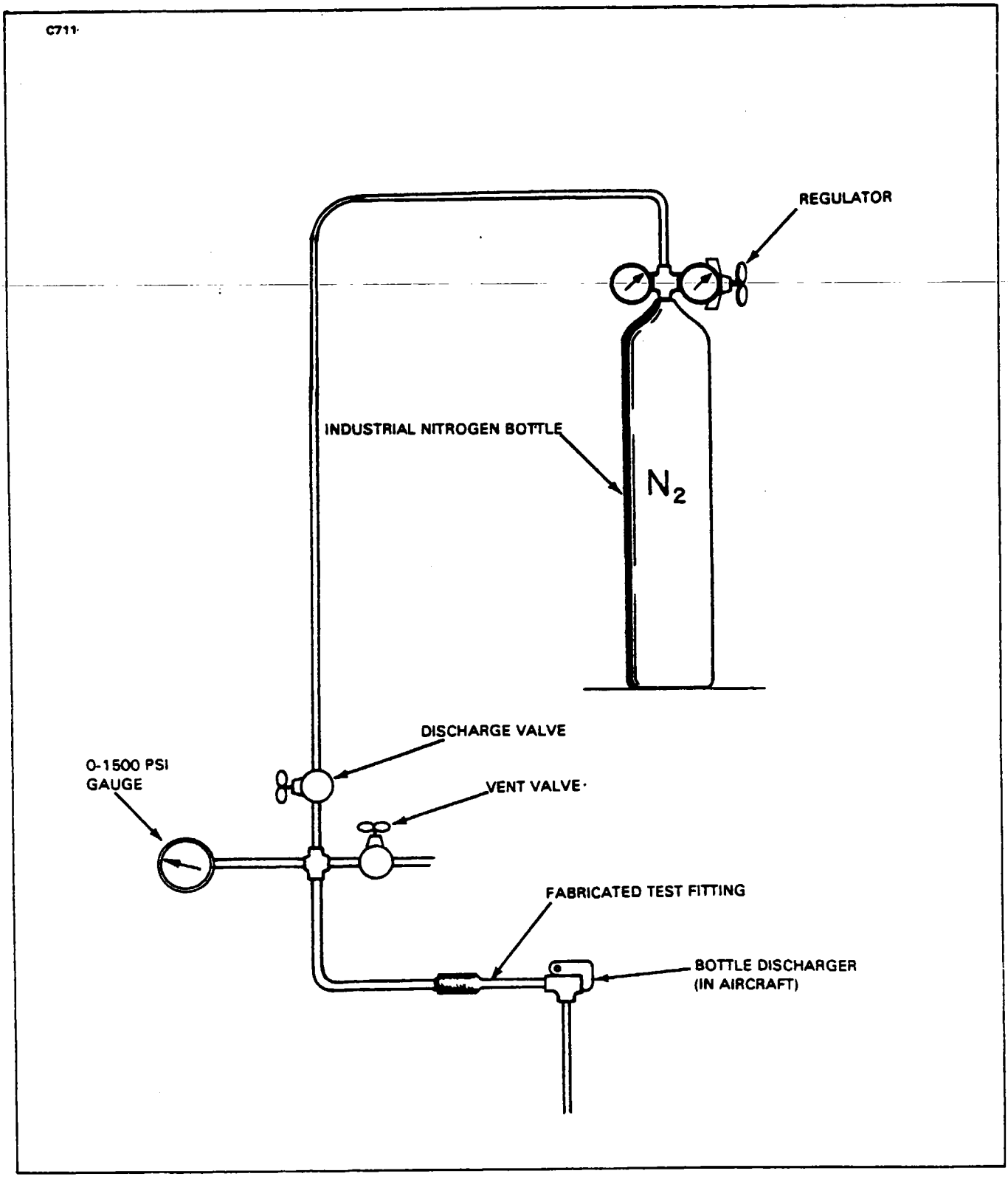

Figure 7-9a. Test Equipment Installation, Emergency Gear Extension System

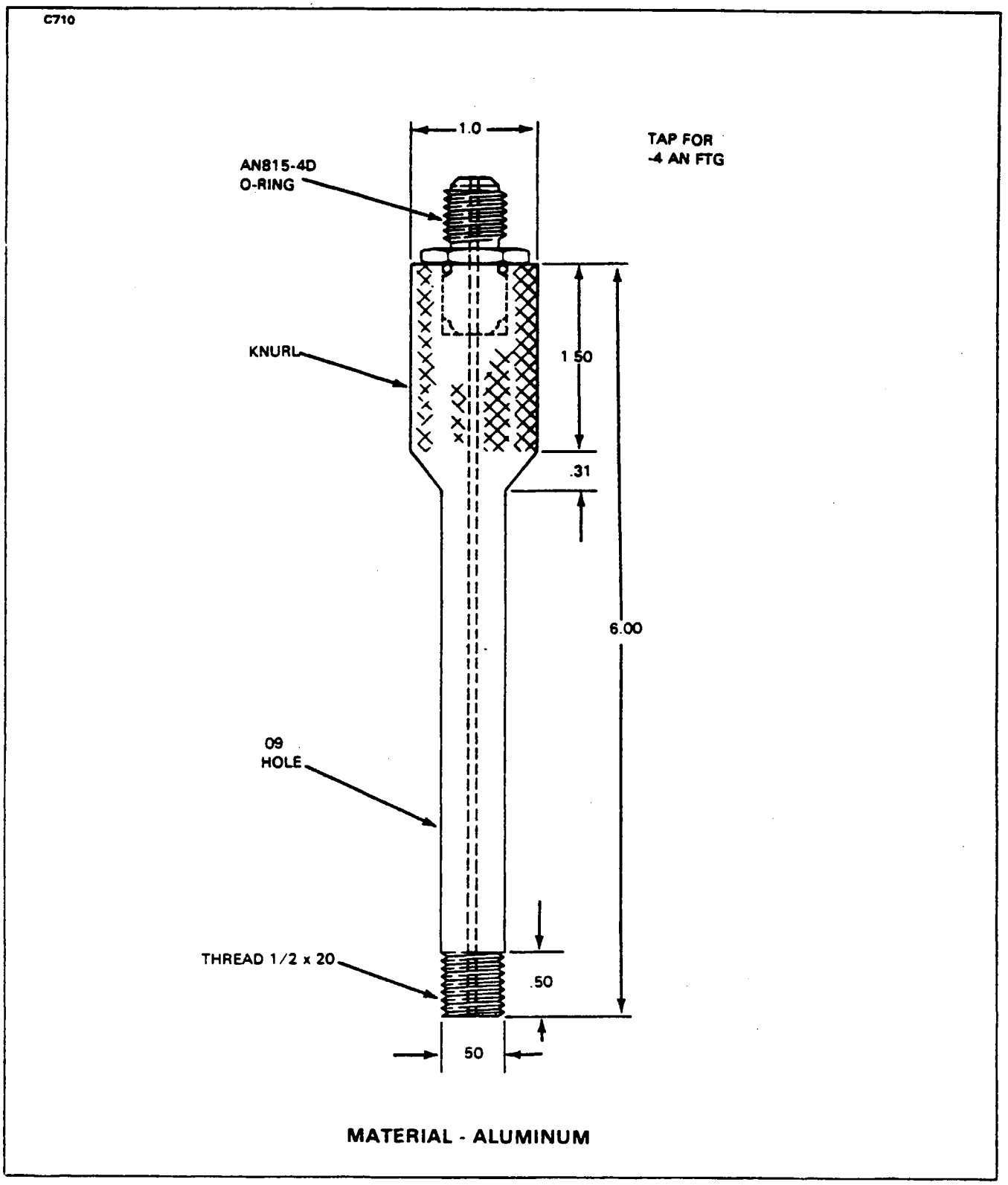

Figure 7-9b. Fabricated Test Fitting, Emergency Gear Extension System

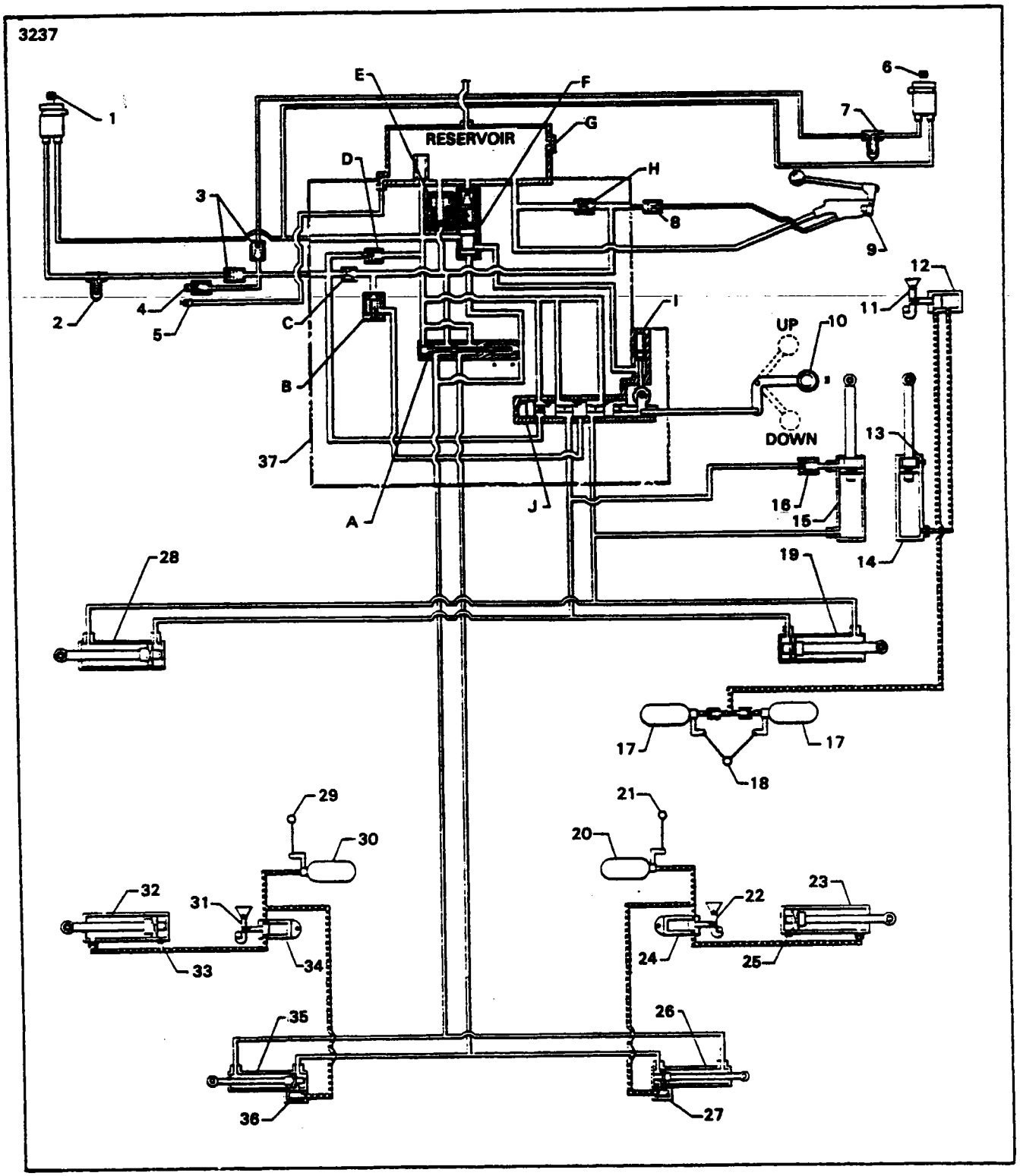

Figure 7-9c. Landing Gear Actuating System (PA-31T2)

1. HYDRAULIC PUMP - LEFT ENGINE
2. HYDRAULIC FILTER - LEFT ENGINE
3. CHECK VALVES FOR LEFT AND RIGHT PUMPS
4. PRESSURE PORT
5. SUCTION - FILL
6. HYDRAULIC PUMP - RIGHT ENGINE
7. HYDRAULIC FILTER - RIGHT ENGINE
8. HAND PUMP CHECK VALVE
9. HAND PUMP
10. GEAR SELECTOR (REMOTE)
11. UPLOCK HOOK - PNEUMATIC SYSTEM
12. PNEUMATIC ACTUATOR FOR RELEASING UPLOCK HOOK
13. FILTER/VENT
14. PNEUMATIC ACTUATOR - NOSE GEAR
15. HYDRAULIC ACTUATOR - NOSE GEAR
16. RESTRICTOR VALVE
17. NITROGEN BOTTLES - NOSE GEAR PNEUMATIC SYSTEM
18. OPERATING LANYARD - NOSE GEAR PNEUMATIC SYSTEM
19. HYDRAULIC ACTUATOR - RIGHT MAIN GEAR
20 NITROGEN BOTTLE - RIGHT MAIN GEAR PNEUMATIC SYSTEM
21. OPERATING LANYARD - RIGHT MAIN GEAR PNEUMATIC SYSTEM
22. UPLOCK HOOK - RIGHT MAIN PNEUMATIC
23. PNEUMATIC ACTUATING CYLINDER - RIGHT MAIN GEAR
24. PNEUMATIC ACTUATOR FOR RELEASING UPLOCK HOOK
25. FILTER/VENT
26. GEAR DOOR ACTUATING CYLINDER - RIGHT MAIN
27. SHUTTLE VALVE
28. HYDRAULIC ACTUATOR - LEFT MAIN GEAR
29. OPERATING LANYARD - LEFT MAIN GEAR PNEUMATIC SYSTEM
30. NITROGEN BOTTLE - LEFT GEAR PNEUMATIC SYSTEM
31. UPLOCK HOOK - LEFT GEAR PNEUMATIC SYSTEM
32. PNEUMATIC ACTUATING CYLINDER - LEFT MAIN GEAR
33. FILTER/VENT
34. PNEUMATIC ACTUATOR FOR RELEASING UPLOCK HOOK
35 GEAR DOOR ACTUATING CYLINDER - LEFT MAIN
36. SHUTTLE VALVE
37. POWER PACK
    A. DOOR SOLENOID VALVE
    B. PRIORITY VALVE
    C. ENGINE PUMP CHECK VALVE
    D. MAIN RELIEF VALVE
    E. LOW PRESSURE THERMAL RELIEF VENT VALVE
    F. TIME DELAY VALVE
    G. SIGHT GAUGE
    H. HAND PUMP RELIEF VALVE
    I. PISTON RELEASE (LOCK)
    J. LANDING GEAR SELECTOR VALVE

Figure 7-9c. Landing Gear Actuating System (PA-31T2) (cont.)

7-37. LANDING GEAR LIGHT SWITCHES.

7-38. ADJUSTMENT OF NOSE GEAR UP LIGHT SWITCH.

a. Ascertain that the nose landing gear uplock is properly adjusted.

b. Retract gear fully and ascertain that the uplock roller is engaged and resting against the uplock hook. (No pressure on hydraulic system.)

c. Adjust the gear uplock switch toward the hook until it actuates. The red indicator light in cockpit should go out.

NOTE

Main gear up switches must be actuated also to extinguish the red light.

d. Extend and retract to ascertain proper adjustment.

7-39. ADJUSTMENT OF NOSE GEAR DOWN LIGHT SWITCH.

a. Ascertain that the gear is properly adjusted for downlock position.

b. With the gear down and locked, adjust the gear down switch toward the link until it actuates. The green indicator in the cockpit should come on.

c. Check switch operation by partially retracting and extending the gear several times.

7-40. ADJUSTMENT OF MAIN GEAR UP LIGHT SWITCH.

a. Ascertain that the main landing gear uplock is properly adjusted.

b. Retract the gear fully and ascertain that the uplock roller is engaged and resting on the uplock hook. (No pressure on hydraulic system.)

c. Adjust the gear uplock switch toward the link until it actuates. The red indicator light in the cockpit should go out.

NOTE

Opposite main gear switch and nose gear switch must be actuated also to extinguish the red light.

d. Extend and retract the gear to ascertain proper adjustment.

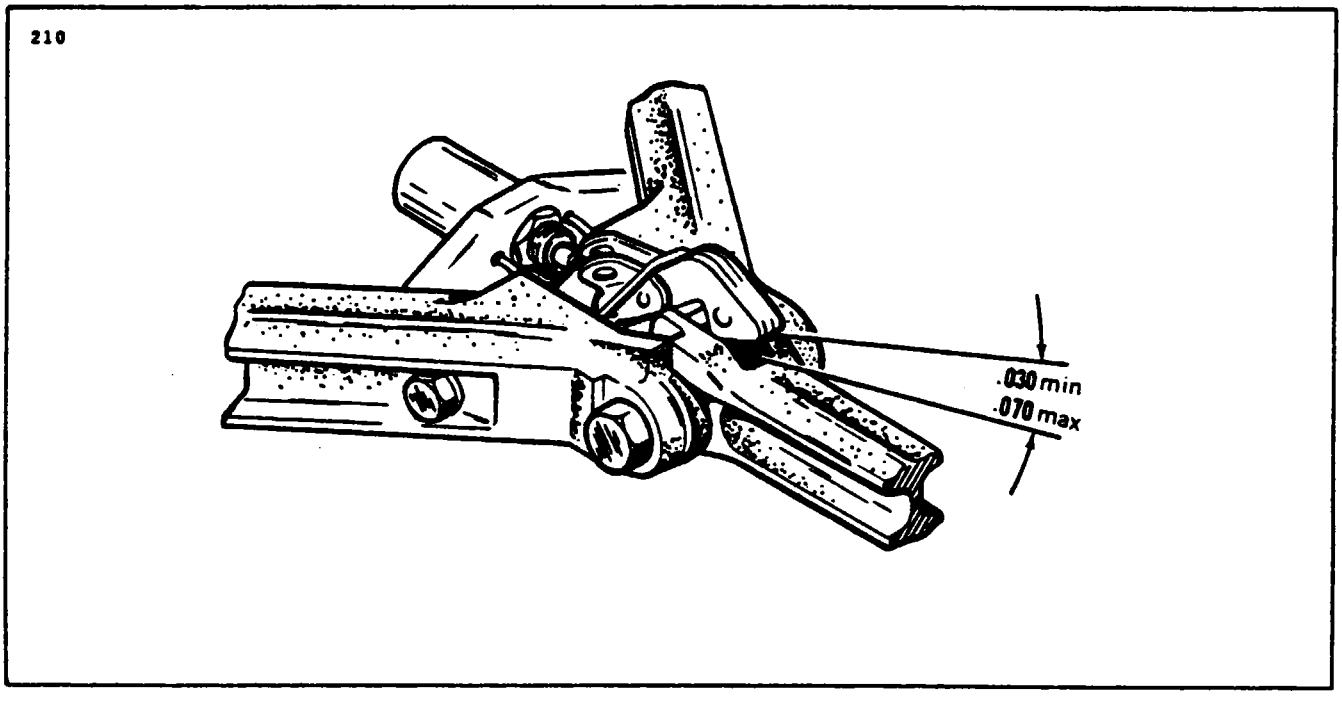

Figure 7-10. Adjusting Main Gear Down Limit Switch

7-41. ADJUSTMENT OF MAIN GEAR DOWN LIGHT SWITCH. (Refer to Figure 7-10.)

a. Ascertain that the main landing gear downlock is properly adjusted.

b. With the gear down and locked, the green indicator light in the cockpit should come on when the downlock hook is lowered to within 0.030 to 0.069 of an inch of bottoming in the hook slot of the lower side brace link. The following check and adjustment may be accomplished:

1. By hand, raise the downlock hook until the downlock switch is heard to actuate (click).

2. With the hook raised, place a 0.070 of an inch wire feeler gauge between the hook and bottom surface of the slot in the side brace link. (Refer to Figure 7-10.)

3. Lower the hook, allowing it to rest on the feeler gauge. (The end of the gauge should be even with the lock pin.) The switch should not be heard to actuate.

4. Again raise the hook, allowing the switch to actuate, and place a 0.030 gauge in the slot of the side brace link.

5. Lower the hook. The switch should actuate allowing the green indicator light in the cockpit to come on.

6. When lowering the hook, if the switch actuates too soon, adjust the switch toward the hook. If it actuates too late, adjust the switch away from the hook.

7-42. ADJUSTMENT OF MAIN INBOARD GEAR DOOR AJAR SWITCHES.

a. Ascertain that main inboard gear doors are adjusted properly.

b. With the master switch off, actuate the hand pump to bring the gear doors down.

c. Disconnect the actuator cylinder rod from the doors so they hang free.

d. Locate the switch by adjusting the retainer nuts so that when the door is closed by hand, a click can be heard approximately one inch before the door is completely closed.

CAUTION

Avoid extreme outward adjustment that would cause the switch mounting tab to bend back when the door is closed, resulting in damage to the switch unit.

NOTE

An ohmmeter or continuity tester can be used to indicate switch actuation.

e. Install the actuator cylinder rod to the door.

f. Turn the master switch ON and with the gear selector in down position, actuate the hand pump until the door closes.

7-43. ADJUSTMENT OF LANDING GEAR SAFETY SWITCH. The landing gear safety switches are located on the left and right main gear upper torque links and are adjusted so that the switch is actuated at the last .25 ± .13 of an inch of gear extension.

a. Compress the strut until nine inches is obtained between the top of the gear fork and the bottom of the gear housing. Hold the gear at this measurement.

b. Adjust the switch down until it actuates at this point. Secure the switch.

c. Extend and then compress the strut to ascertain that the switch will actuate at the last quarter, plus or minus one eighth of an inch of oleo extension.

7-44. ADJUSTMENT OF LANDING GEAR PROPELLER REVERSE SWITCH. The propeller reverse switch is located on the nose gear torque link.

a. Adjust the switch to activate when the oleo strut is within .25 inches ± .12 inches of its fully extended position.

b. Extend and then compress the strut to be certain the switch actuates properly. Connect an ohmmeter to the electrical leads of the switch. Measure the strut extension at the point where the switch closes. This distance should be within the range given in Step a.

c. Check to be sure that the propellers move into their reverse position during taxi test.

CAUTION

Do not attempt to move the power levers into reverse with the engines static as damage will result to the linkage.

7-45. LANDING GEAR WARNING SYSTEM.

7-46. REMOVAL OF GEAR WARNING SWITCHES. (Refer to Figure 7-11.) The gear warning switches are located within the control pedestal, directly under the power levers. Each switch will actuate the warning horn.

a. The switches may be removed from their mounting brackets by the following procedure:

1. Remove the top cover plates of the pedestal (one is forward of the control levers, the other surrounds the levers) by removing their attachment screws.

2. Remove the switch from its mounting bracket by removing the two screws that secure either switch and spacer block. First remove the nut from each screw, and allow the bracket of the other switch and spacer block to swing full forward by turning the adjustment screw counterclockwise. Pull aft on the switch bracket to be removed and push out the attachment screws.

3. Disconnect the necessary electrical leads.

b. The switch mounting brackets may be removed by removing the control lever assembly as follows:

1. Disconnect the engine control cables from the control levers by removing the connecting clevis pins.

2. Remove the flush head screw at each side of the pedestal housing.

3. Remove the friction knob with washer from the right side of the pedestal.

4. Remove the cap bolts that secure the frame.

5. Pull the assembly from the pedestal housing.

6. Remove the control keeper tube that holds the switch brackets in the control frame by removing the tube attachment screws from each side of the frame.

7-47. INSTALLATION OF GEAR WARNING SWITCHES. (Refer to Figure 7-11.)

a. The switch mounting brackets, as part of the control lever assembly, may be installed as follows:

1. Assemble the mounting brackets (switches and spacer blocks may be installed with mounting brackets), tension springs and spacer washers in the control frame, and secure with the keeper tube. Secure keeper tube in frame.

2. Install the control lever assembly in the pedestal housing and secure it with cap bolts and screws.

3. Install the friction knob with washer on the end of the lever shaft at the right side of the pedestal.

4. Connect the engine control cables to their respective levers using clevis pins. Place washer on ends of clevis pins and secure cotter pins.

b. The switches may be installed on their mounting brackets by the following procedure:

1. Connect the electrical leads to their respective switch terminals. (Refer to Electrical System Schematic, Section XV, for wire installation.)

2. Place the switch and spacer block in its mounting bracket and install attachment screws. It will be necessary to swing the bracket of the other switch and spacer block forward to install the attachment screws. Install nuts on the screws and secure.

3. Position the pedestal cover plates on the pedestal; install screws and secure.

4. Adjust the switches per Paragraph 7-48.

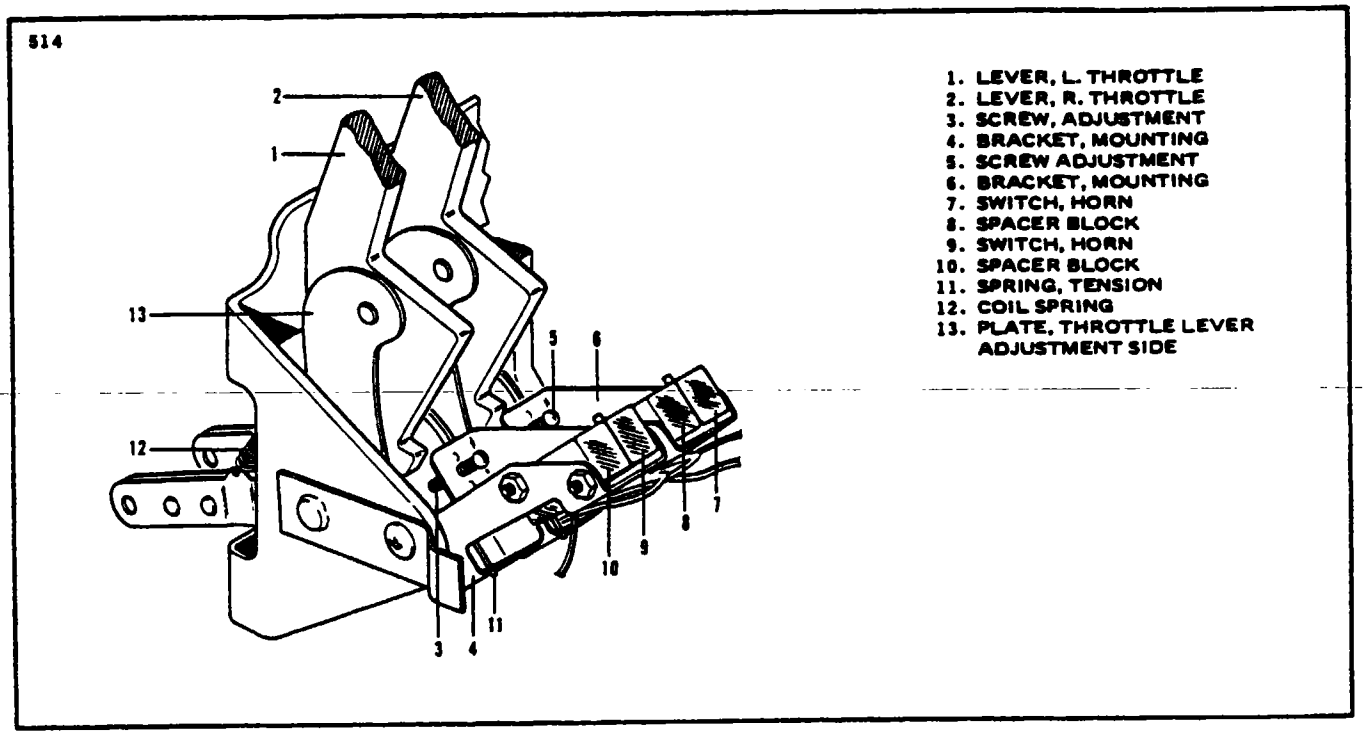

Figure 7-11. Gear Warning Switches Installation

7-48. ADJUSTMENT OF GEAR WARNING SWITCHES. The gear warning horn switches are installed in the control pedestal, with each controlled by a power lever. Each switch activates the warning horn when either or both power levers are reduced below 150 foot-pound of engine torque. The following is a procedure for the adjustment of the gear warning switches:

a. Ground Adjustment:

1. Start and run the engines with the propeller set for full increase RPM.

2. To set the power lever switches to actuate at a desired power lever setting, retard the power levers until the engine torque gauges read 150 foot-pound of torque. Mark the power lever cover in some manner in relation to the power levers for adjustment of the switches.

3. Shut down the engines.

4. Set the power lever at the locations marked. With the adjustment screw on the switch bracket, adjust each switch separately toward the actuator angle until the switch is heard to actuate. The adjustment screw may be reached by inserting a long screwdriver through the travel slot of the power lever in the pedestal cover.

b. Horn Operational Check:

1. To check the horn operation, jack the airplane and retract the landing gear. With the master switch on, retard either power lever until the gear up indicator horn sounds. Check the location of the power lever to the adjusting mark. The warning horn will operate when either or both power levers are retarded.

2. With the warning horn operating, lower the gear to insure that the horn ceases to operate when the gear is down and locked.

3. Remove the airplane from the jacks.

c. Flight Adjustment:

1. Flight test the airplane to insure operation of the warning system when the gear is up and power is reduced to the desired engine torque.

7-49. WHEELS.

7-50. REMOVAL AND DISASSEMBLY OF NOSE WHEEL. (B. F. GOODRICH) (Refer to Figure 7-12 or 7-13.)

a. Place the airplane on jacks. (Refer to Jacking, Section II.)

b. To dismount the nose wheel, remove the axle nut, bolt and axle plugs. Tap the axle out of the wheel assembly and fork using a 1 7/16 inch O.D. tube.

c. Flex the fork enough to allow the wheel and wheel spacers to clear the fork assembly.

d. To disassemble the wheel, deflate the tire and break the tire beads away from the flanges by pressing with the heels of the hands or with a tire press.

e. Remove nuts, washers and tie bolts from the wheel. Separate the wheel halves and remove the tire; also remove the valve stem assembly if installed.

f. The wheel bearing and seal can be removed by tapping out evenly from the inside with a brass drift. Be careful not to damage the bearing cage.

NOTE

Bearing cups are a press fit into the wheel halves and should not be removed unless replacement is necessary. If cups are to be replaced, heat the wheel half to (275° to 300° F); then press out the cups with a plug (refer to Figure 7-12). Support the wheel hub while removing cups.

7-51. INSPECTION OF NOSE WHEEL ASSEMBLY. (B. F. GOODRICH)

a. Clean metal parts in solvent, and air dry thoroughly. Clean rubber parts by wiping with a clean lint-free cloth.

b. Magnaflux bolts for cracks, breaks, and surface blemishes on the bolt head radius or shank.

c. With dye check or Zyglo, inspect wheel halves for cracks and breaks, noting in particular the bead seat, tubewell and web junction areas.

d. Visually inspect all metal parts for pitting, corrosion, cracks, breaks, uneven wear, and other surface defects.

e. Inspect packing sealing surfaces for smoothness.

f. Inspect packing for pits, cuts, and other defects. Replace as necessary.

7-52. REPAIR AND REPLACEMENT OF NOSE WHEEL ASSEMBLY. (B.F. GOODRICH)

a. Repair scratches, nicks, and other minor surface blemishes on the wheel halves by sanding with emery cloth, removing as little metal as possible. Polish and surface treat the repaired surface with Dow No. 7.

NOTE

Do not remove more than 0.020 inch below original surface in local areas for general blending.

b. Paint repaired surfaces with two coats zinc chromate primer and one coat aluminum lacquer.

NOTE

Use only one coat of zinc chromate primer and no finish coat on mating surfaces and in the packing groove.

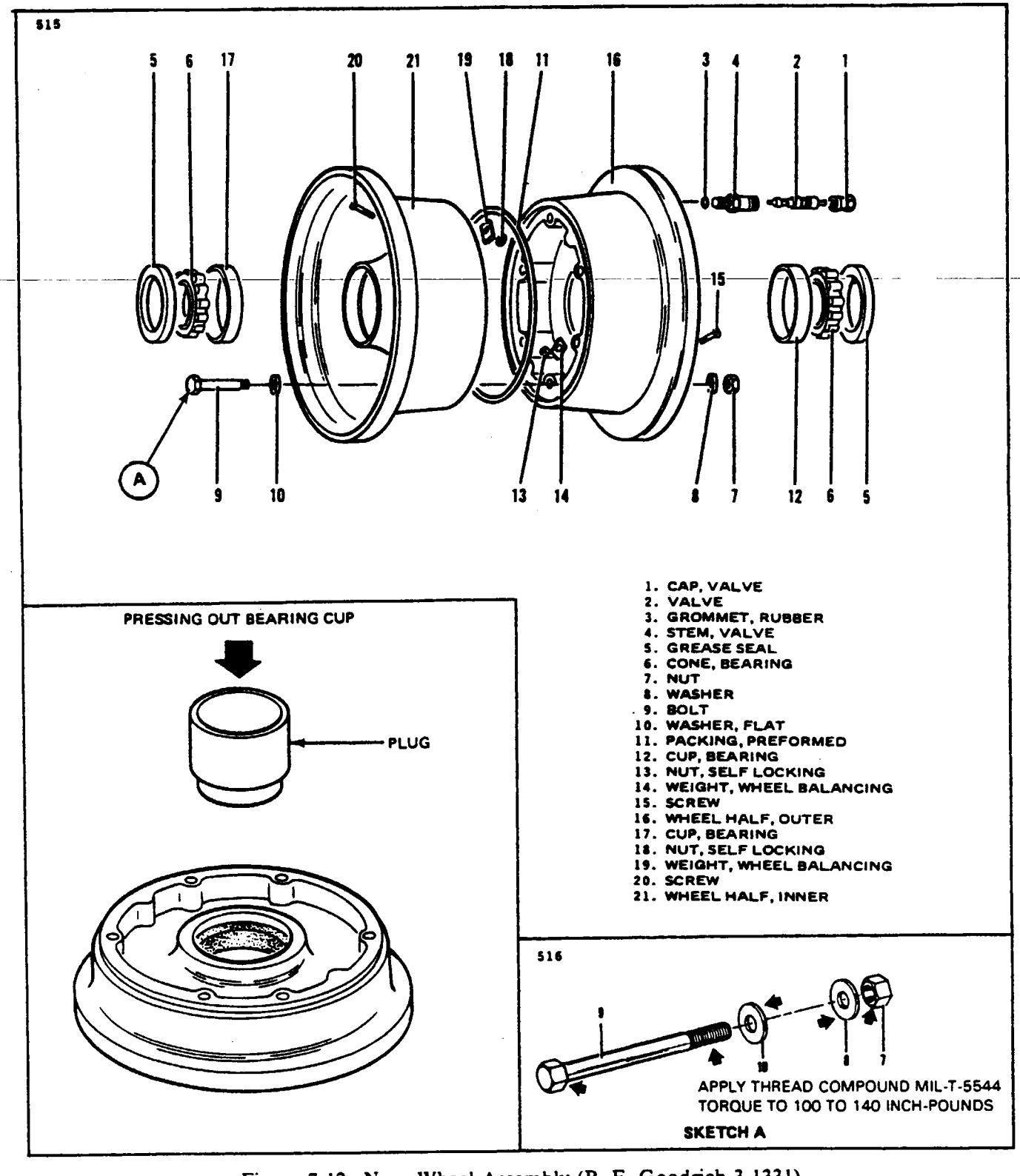

Figure 7-12. Nose Wheel Assembly (B. F. Goodrich,3-1331)

c. Replace all parts which have visible cracks or are damaged beyond repair.
d. Replace packing and grommet at each overhaul.

7-53. ASSEMBLY AND INSTALLATION OF NOSE WHEEL. (B.F. GOODRICH)

a. If cups have been removed, reinstall as follows:
   1. Heat wheel halves to (275°to 300°F) and cool cups to (0°F).
   2. Support the wheel hub and paint the inside diameter of the hub with zinc chromate primer. Then press the cups into the wheel half.

NOTE

The wet zinc chromate primer lubricates the parts to be pressed together and assists in preventing galvanic corrosion between parts.

b. Reinstall valve stem and balance weights if removed.
c. Lubricate the packing with grease (MIL-G-3545C or equivalent), and install in the packing groove on the wheel half.
d. Install the tire and join the two wheel halves. Apply a generous coat of thread compound, MIL-T-5544 to threads of bolts, faces of washers, and bearing face of nuts. Tighten two nuts, diametrically opposite to 100 inch-pounds. Using the same procedure, retighten all nuts. Refer to Figure 7-12 or 7-13.

NOTE

Do not use an impact wrench to apply final torque. Use a preset hand torque wrench only.

e. Inflate the tire (refer to Table II-I) and test for leakage. Refer to Parts Catalog for the correct spacers required for particular tire installed.
f. Repack wheel bearings with grease (MIL-G-3545C) and lubricate cups. Place bearings in the wheel assembly and install grease seals.
g. Install the wheel and spacers in the fork and insert the axle. Refer to Parts Catalog for the correct spacers required for particular tire installed.
h. Adjust the axle bolt to allow the wheel to turn freely with no side play.

7-54. REMOVAL AND DISASSEMBLY OF MAIN WHEEL (GOODYEAR, 9544171-1). (Refer to Figure 7-14.) The following Paragraphs 7-54 thru 7-57 pertain to Goodyear wheels.

a. Place the airplane on jacks. (Refer to Jacking, Section II.)
b. Deflate the tire and remove the valve core from the valve stem.
c. Remove the wire retaining ring (1) and hub cap (2) from the wheel.
d. Remove the wheel assembly from the axle.

CAUTION

Use care during removal of wheel from axle to avoid damage to the bearing cones (3) and inboard bearing seal (9).

e. Remove the inboard bearing cone (3) and inboard bearing seal (9) from the airplane axle.
f. Place the wheel on a clean, flat surface with the valve stem up.
g. Break the tire beads free of both wheel flanges by applying pressure around the entire sidewall as close to the tire beads as possible.

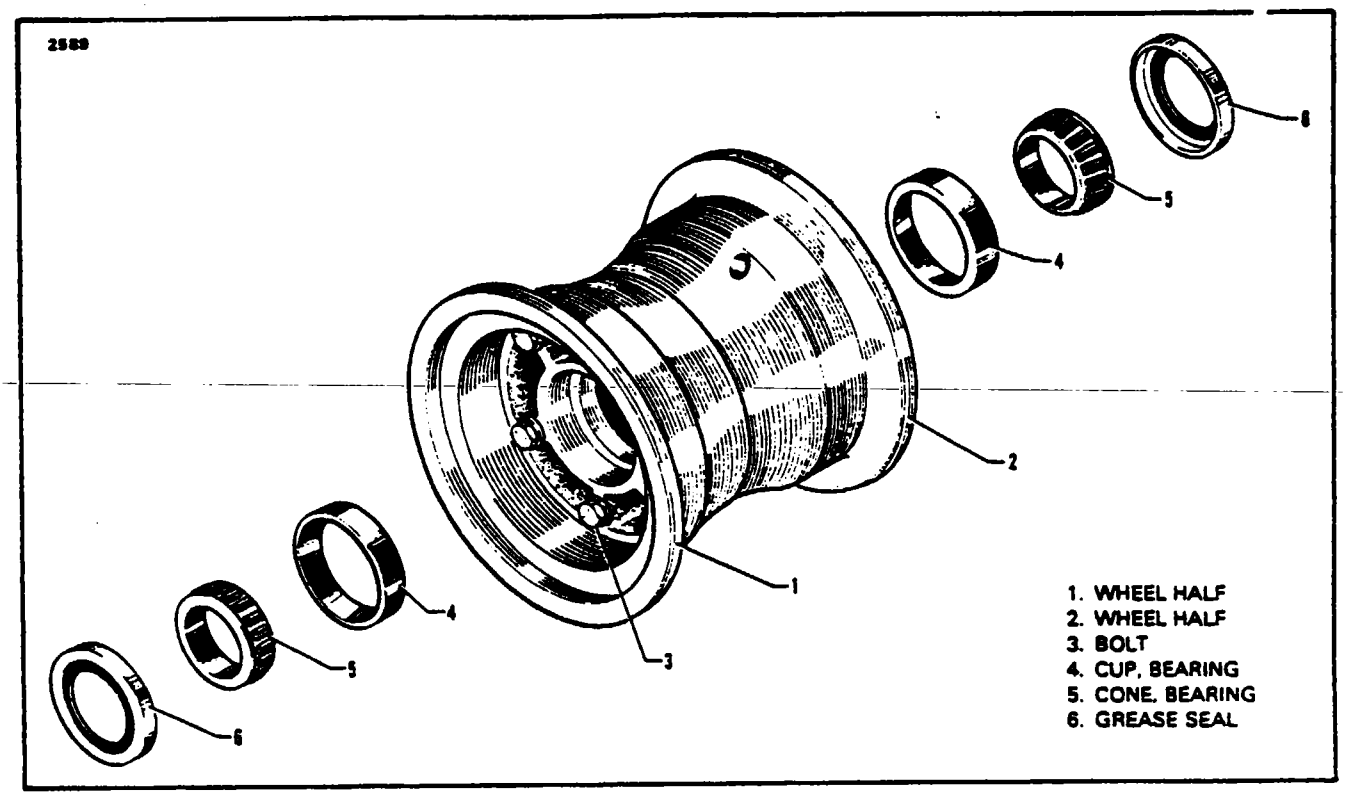

Figure 7-13. Nose Wheel Assembly (B. F. Goodrich,3-1076)

CAUTION

Do not pry between the wheel flange and tire bead with sharp tools, as this could damage the wheel and tire.

h. Remove the self-locking nuts (16), flat washers (15), wheel bolts (10) and countersunk washers (11). Then separate the wheel sub-assemblies (5 and 6).

NOTE

Do not use power or impact wrenches to remove wheel bolts or nuts.

NOTE

Bearing cups (4 and 7) are a shrink fit in the wheel sub-assembly hubs (5 and 6) and should not be removed unless replacement is necessary. (Refer to Paragraph 7-74 for removal procedures if replacement is required.)

7-55. CLEANING AND INSPECTION OF MAIN WHEEL ASSEMBLY. (GOODYEAR ,9544171-1).

a. Remove dirt and grease with a quick drying, cleaning solvent, Federal Specification P-D-680 (Stoddard solvent). A soft bristle brush may be used to remove hardened grease, dust or dirt.

CAUTION

Quick drying cleaning solvents are toxic and volatile. Use in a well-ventilated area. Avoid contact with skin or clothing. Do not inhale the vapors.

b. Clean the bearing cones in a separate container of clean fluid. Then dry them thoroughly, using filtered and dried compressed air.

NOTE

Do not spin bearings with compressed air.

c. Inspect bearing cones for nicks, scratches, water staining, spalling, heat discoloration, roller wear, cage damage, cracks or distortion. Replace if any of these conditions exist or if cones show signs of wear. Repack bearing cones with clean bearing grease, MIL-G-81322.

d. Wash the inboard bearing seal (9) in isopropyl alcohol and dry with a clean, soft cloth.

e. Visually inspect all parts for cracks, distortion, defects and excessive wear.

f. Inspect inboard bearing seal (9) for wear or damage to sealing lip or to metal reinforcing ring. Replace if damaged or deformed.

g. Inspect wheel sub-assemblies (5 and 6) for cracks, corrosion or other damage. Cracked or badly corroded casting should be replaced. Particular attention should be given the underside of the tubewell area for cracks or potential cracks, paying particular attention to the area from the bead seat radius to the end of the toe of the tire. Small nicks, scratches, or pits in the castings should be blended out with fine (320-360 grit) wet-or-dry aluminum oxide cloth.

h. Check bearing cups (4 and 7) for tightness, scratches, pitting, corrosion, or evidence of overheating. If any of the defects exists, replace the cup in accordance with Paragraph 7-56, step a.

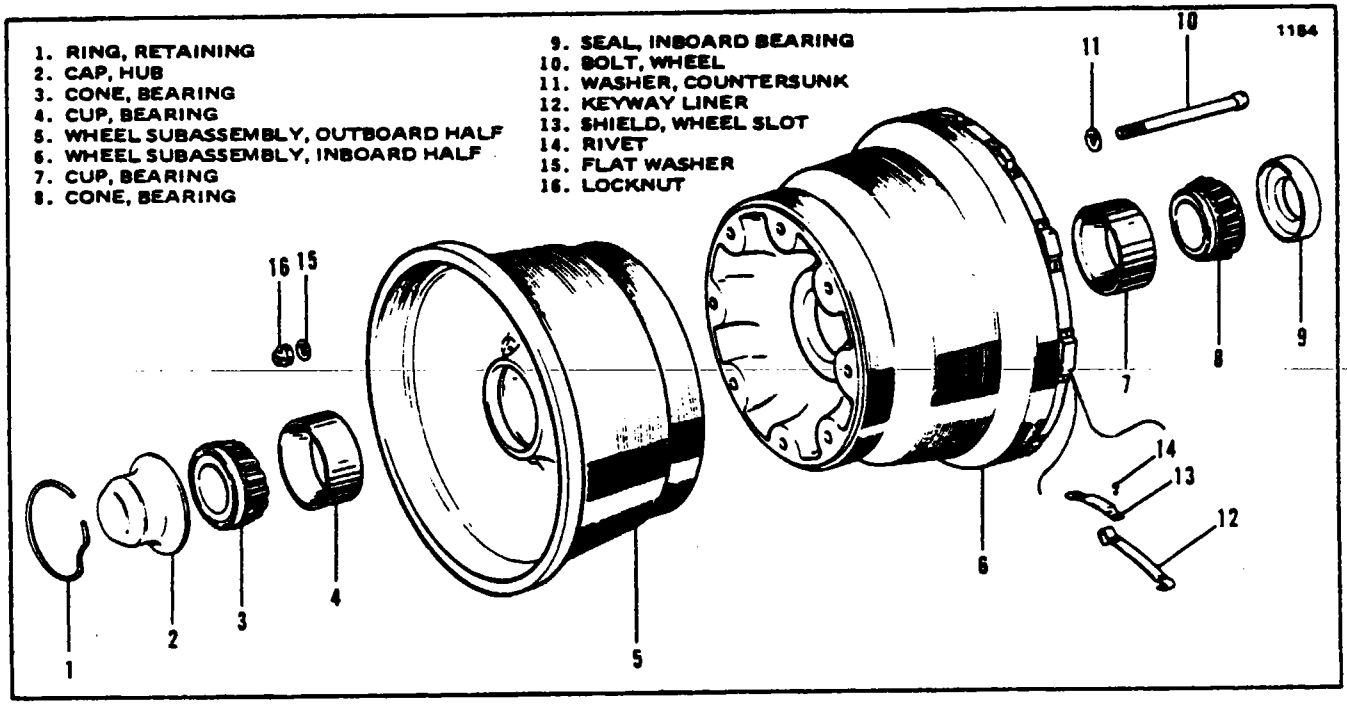

Figure 7-14. Main Wheel Assembly (Goodyear, 9544171-1)

i. Inspect valve stem hole of outboard wheel assembly (5) for cracks or corrosion. Replace cracked assembly. Pits, nicks, or corrosion may be polished out with fine (320-360 grit) aluminum oxide cloth, wet-or-dry.

j. Inspect wheel bolts (10). Carefully check for cracks in radius under bolt head and in first two threads adjacent to the bolt shank. Replace cracked bolts.

NOTE

No refinishing of bolts is permissible.

k. Check self-locking nuts (16) for self-locking feature. Replace if nut can be turned onto bolt with finger pressure.

l. Inspect keyway liners (12) on inboard wheel sub-assembly (6) for wear. If distance between surfaces of liners across any tang slot of inboard wheel sub-assembly exceeds 0.620 of an inch, drill out rivets and replace liners in accordance with instructions given in Paragraph 7-56, step b.

m. Inspect keyway liners for tightness. If loose, either tighten or replace rivets.

7-56. REPAIR OF MAIN WHEEL ASSEMBLY. (GOODYEAR, 9544171-1). Repairs to the main wheel assembly are limited to blending out small nicks, scratches, gouges and areas of slight corrosion, plus the replacement of parts which are cracked or badly corroded.

NOTE

Corrosion originates at points where the protective wheel coating is ruptured. All traces of corrosion and residue must be removed before wheel halves are treated and repainted. (Corrosion residue accelerates the corrosion process.)

a. Bearing Cup Replacement:
   1. Removal:
      (a) Heat wheel sub-assembly in boiling water for one hour, or in oven not exceeding 250°F (121°C) for 30 minutes.
      (b) Remove sub-assembly from source of heat and remove bearing cup.

NOTE

The bearing cup should be loose enough to fall out of the bearing bore after heating the wheel sub-assembly and inverting it. If the cup does not drop out, tap it evenly from the bore with a fiber drift pin.

   2. Installation:
      (a) Place wheel sub-assembly in boiling water for one hour, or in an oven not exceeding 250°F (121°C) for 30 minutes. Chill the bearing cup on dry ice.
      (b) Remove wheel half from source of heat, and dry chilled bearing cup thoroughly. Coat contacting surfaces of cup with zinc chromate primer or paste.
      (c) Install the chilled bearing cup into the heated wheel sub-assembly and tap into place evenly with a fiber drift pin.

NOTE

The bearing cup should be installed while the primer or paste is still wet.

b. Keyway Liner Replacement:
   1. Removal:
      (a) Center punch keyway liner rivet head on inside of wheel flange and drill out rivet head using a 0.109 drill.

CAUTION

Ascertain that the punch mark is centered on the rivet and that the wheel is not damaged by the drill. Avoid enlarging rivet holes in wheel flange.

      (b) Punch out the rivet shank and remove the slot shield (13) and keyway liner (12).

NOTE

Inspect area under keyway liner for corrosion. Blend out corrosion pits to 0.010 of an inch deep and retreat reworked areas in accordance with Paragraph 7-57, step a.

2. Installation:
   (a) Position the new liner (12) on the inboard wheel sub-assembly with the tab extension on ends of liner towards the center line of the wheel. The edge of the liner should be flush with the outer edge of the wheel.
   (b) Place the slot shield (13) over the keyway of the wheel assembly and install rivet (14) through the wheel flange, keyway liner and slot shield.

NOTE

Shop (peened) head of rivet must be on the outside of slot shield. Chamfered head of rivet must be installed in countersink in wheel flange.

   (c) Support the rivet head solidly and peen the end of the rivet.

7-57. ASSEMBLY AND INSTALLATION OF MAIN WHEEL. (GOODYEAR, 9544171-1).

a. Retreating and Repainting:

1. Thoroughly clean repaired surfaces and areas of the wheel from which paint has been removed.

2. Treat the cleaned surfaces with Dow No. 1 solution, Specification MIL-M-3171, and paint with two coats of zinc chromate primer, Specification MIL-P-8585 and two coats of aluminum lacquer, Specification TT-L-32.

NOTE

Never paint working surfaces of bearing cups. Wheel register surfaces and bolt bosses should receive one mist coat of zinc chromate primer only.

b. Place the outboard wheel sub-assembly (5) on a clean, flat surface.

c. Use a lint-free cloth dampened with isopropyl alcohol to clean tire beads, wheel flange bead seat, and wheel register areas.

d. Inflate the inner tube just enough to round it out, and place it in the tire with the yellow stripe on the base of the inner tube at the red dot on the tire.

NOTE

Both the yellow stripe on the tube and the red dot on the tire must be mated to bring the tire and tube into proper balance.

e. Install the tire and tube on the outboard wheel sub-assembly (5), and insert the valve through the valve hole. Try to keep the tube below the wheel half mating edge.

f. Position the inboard wheel sub-assembly (6) in the tire and align the bolt holes with those in the outboard wheel sub-assembly (5). Be careful during this operation not to pinch the tube between the wheel sections.

g. Install the countersunk washers (11) on the bolts (10) with the washer countersink facing the bolt head. Install the bolt with washer through the inboard sub-assembly (6) and outboard sub-assembly (5).

h. Install the flat washer (15) and self-locking nut (16) on the bolt (10). Tighten the nuts in increments of 20 inch-pounds to a final torque of 120 inch-pounds.

TABLE VII-I. INSPECTION LIMITS (GOODYEAR, 9544171-1)

Part (Refer to Figure 7-14)	Defect	Remedy
Wheel Sub-assemblies (5 and 6).	Small nicks, scratches, gouges and areas of slight corrosion to a depth of 0.015 inch.	Blend out and polish with fine (400 grit) wet-or-dry sandpaper.
Bearing cones (3) and (8) bearing cups (4 and 7.)	Scratches, nicks, corrosion, or evidence of wear or overheating.	Replace.
Inboard bearing seal (9).	Cuts, wear, cracks, or distortion.	Replace.
Wheel bolts (10).	Cracks or deep nicks in thread or shank.	Replace.
Keyway Liners (12).	Cracked or badly worn.	Replace.

CAUTION

Applying uneven torque to nuts may cause bolt fatigue. Do not use impact or power wrenches on wheel bolts or nuts.

i. Inflate the tire just enough to seat the tire beads against the wheel flanges.

j. Remove the valve core and allow the tire to deflate completely to allow the tube to equalize within the tire.

k. Install the valve core and inflate the tire to 20 psi. Do not inflate the tire to full operating pressure until the wheel is mounted on the aircraft.

l. If not already accomplished, pack the bearing cones (3 and 8) and coat the bearing cups (4 and 7) and lips of the inboard bearing seal (9) with clean bearing grease, Specification MIL-G-81322.

NOTE

Apply grease sparingly but thoroughly. Do not overlubricate.

m. Install bearing cones and inboard bearing seal (9) in the wheel assembly, being careful that the seal is properly seated against the bearing cup (7).

CAUTION

Exercise care when installing the wheel assembly on the airplane so as not to damage the bearing cones and bearing seal.

n. Install the axle nut and adjust the bearing. For proper seating of the bearings, rotate the wheel in the forward direction while torquing the axle nut.

o. Torque the axle nut to 80 inch-pounds; then back off the nut to 0 inch-pounds and retorque to 40 inch-pounds. If the cotter pin cannot be installed, it is permissible to advance the axle nut (not more than 30 degrees) to install the cotter pin.

p. Upon completion, install hubcap (2) and retaining ring (1).

7-58. REMOVAL AND DISASSEMBLY OF MAIN WHEEL (CLEVELAND, 40-106/40-106A). (Refer to Figure 7-15.) The following Paragraphs 7-58 thru 7-60 pertains to Cleveland Wheel.

a. Place the airplane on jacks. (Refer to Jacking, Section II.)

b. Remove the wheel cover from the outer wheel (Cleveland 40-106A).

c. To remove the main wheels, remove the bolts that join brake cylinder and lining back plate assemblies.

d. Remove the brake assembly.

e. Remove the snap ring (9) that secures the axle hub cap (13). Remove the cotter pin and axle nut. Slide the wheel off the axle.

f. The wheel may be disassembled by removing the valve core and completely deflating the tire. Break tire bead from wheel by using a mallet. Remove the wheel through bolts (10). Separate the wheel halves from the tire by removing the wheel half opposite the valve stem first and then the other half.

CAUTION

Do not pry between the wheel flange and tire bead with sharp tools, as this could damage the wheel and tire.

g. Remove the bearing cone (6) by removing snap ring (9) securing the grease seal (8) and seal retainers (7). The bearing cup (5) should be removed only for replacement. See Paragraph 7-60 for bearing cup replacement instructions.

7-59. INSPECTION AND REPAIR OF MAIN WHEEL ASSEMBLY (CLEVELAND, 40-106 40-106A). (Refer to the latest revision of Piper Service Bulletin No. 767 for information on the replacement of certain Cleveland 40-106 wheels.) Inspect brake disc for cracks, excessive wear or scoring, rust, corrosion and warpage.

Repairs are limited to blending out small nicks, scratches, gouges and areas of slight corrosion, plus the replacement of parts which are cracked or badly corroded.

NOTE

Remove rust and blend out small nicks, using fine 400 grit sandpaper.

Wheels may also be repainted if the parts have been repaired and thoroughly cleaned. Paint exposed areas with one coat zinc chromate primer and one coat of aluminum lacquer.

NOTE

Never paint working surfaces of the bearing cups.

a. Bearing Cup Replacement:
   1. Removal:
      (a) Insert wheel half into boiling water for 15 minutes or place in an oven not exceeding 149° C (300° F) for 30 minutes.
      (b) Remove from source of heat and invert wheel half. If the cup does not drop out, tap the cup evenly from the axle bore with a fiber drift pin or suitable arbor press.
   2. Installation:
      (a) To replace a new cup apply one coat of zinc chromate primer to wheel half bearing bore.
      (b) Insert wheel half into boiling water for 15 minutes or place in an oven not exceeding 149° C (300° F) for 30 minutes. Chill new bearing cup in dry ice for a minimum of 15 minutes.

(c) Remove wheel half from source of heat and bearing cup from the dry ice. Install the chilled bearing cup into the bearing bore of the heated wheel half. Tap gently to seat evenly in place, using a fiber drift pin or suitable arbor press.

7-60 ASSEMBLY AND INSTALLATION OF MAIN WHEEL (CLEVELAND, 40-106 40-106A). (Refer to Figure 7-15.)

a. Ascertain that the bearing cup (5) in each wheel half (1 and 2) is fully seated in the wheel housing. Lubricate the bearing cones (6) per lubrication chart in Section II. Install cone, grease seal retainer (7), grease seal felt (8), and snap ring (9) into the proper wheel halves.

b. Inflate the tube sufficiently to round it out. Install tube into tire so that balance mark (yellow or white band) is radially aligned with the tire balance mark (red dot).

c. Place outer wheel half (1) into tire and pull tube valve stem through valve hole. Turn tire and outer wheel half (2) over and place the spacer (3) and inner wheel half into position and align the bolt holes with the outer wheel half and the brake disc. Install bolts through the brake disc and inner wheel half and washers and nuts on the outer wheel half. Torque wheel nuts per recommended torque valve on name plate of wheel.

d. Inflate tire to recommended operating pressure per Table II-I.

e. Place the wheel on the axle and install axle nut. While rotating wheel, tighten axle nut to 40 inch-pounds then back off to 0 inch-pounds. Then, while rotating wheel, tighten axle nut to 20 inch-pounds. If slot in nut and hole in axle do not align at this point, rotate nut (tightening or loosening) until nearest possible alignment is reached. Safety nut with a new cotter pin and install the hub cap (13), securing with snap ring (9).

f. Install the brake assembly by installing the brake cylinder on the torque plate, positioning the spacer, lining back plate, and installing the bolts securing assembly. If the brake line was disconnected, reconnect and bleed brakes.

g. Reinstall wheel cover (40-106A).

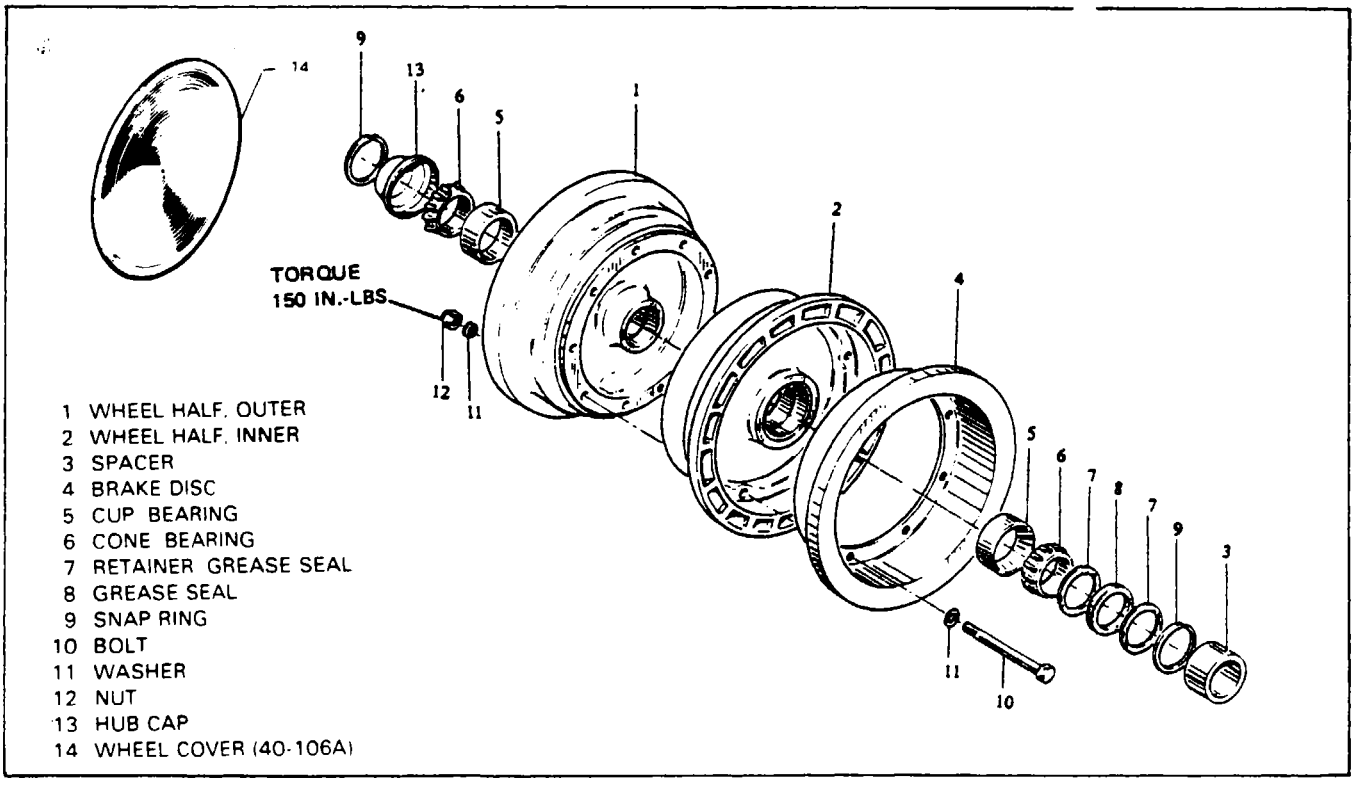

Figure 7-15 Main Wheel Assembly (Cleveland, 40-106 and 40-106A)

7-61. REMOVAL AND DISASSEMBLY OF MAIN WHEEL (B.F. GOODRICH, 3-1392 and 3-1424). (Refer to Figure 7-16.) The following Paragraphs 7-61 thru 7-64 pertains to B.F. Goodrich Wheels.

a. Place the airplane on jacks. (Refer to Jacking, Section II.)
b. Deflate the tire and remove the valve core from the valve stem.
c. Remove the wire retaining ring (14), hub cap (15), cotter pin and axle nut.
d. Remove the wheel assembly from the axle.

CAUTION

Use care during removal of wheel from the axle to avoid damage to the bearing cones (9) and inboard bearing seal (13).

e. Remove the outboard bearing cone (9) and set aside.
f. Remove the inboard bearing cone (9) and inboard bearing seal (13) from axle.
g. Break the tire beads free of both wheel flanges using a mallet, bead breaker, pneumatic tire dismounter, or other non-metallic instrument. Apply pressure around the entire sidewall as close to the tire beads as possible.

CAUTION

Do not pry between the wheel flange and tire bead with sharp tools, as this could damage the wheel and tire.

NOTE

Do not use power or impact wrenches to remove wheel bolts or nuts.

h. Remove the self-locking nuts (1), washers (17) and bolts (16). The wheel sub-assemblies (2 and 4) can now be separated.
i. On tubeless tires only, if the wheel halve packing O-ring (11) is to be reused, mark position to reinstall as closely as possible then remove and place on a clean sheet of paper for cleaning packing (11) and sleeve (12).

NOTE

Lockwire screws (7) and torque keys (6) should only be removed if excessively worn, cracked, loose or if wheel half (4) is to be fluorescent penetrant inspected. (Refer to Paragraph 7-63.)

j. To remove the bearing cups (3 and 5), heat the wheels as explained in Paragraph 7-63 and drive them out of their wheel halves with a non-ferrus soft metal or non-metallic drift pin. If possible, an arbor press should be used.

NOTE

Bearing cups (3 and 5) are a press fit in the wheel sub-assembly hubs (2 and 4) and should not be removed unless replacement is necessary or paint is to be chemically removed from wheel half.

k. On tubeless tires only, remove valve stem (10) from outer wheel half assembly (2).
l. Remove and discard rubber grommet from valve stem.

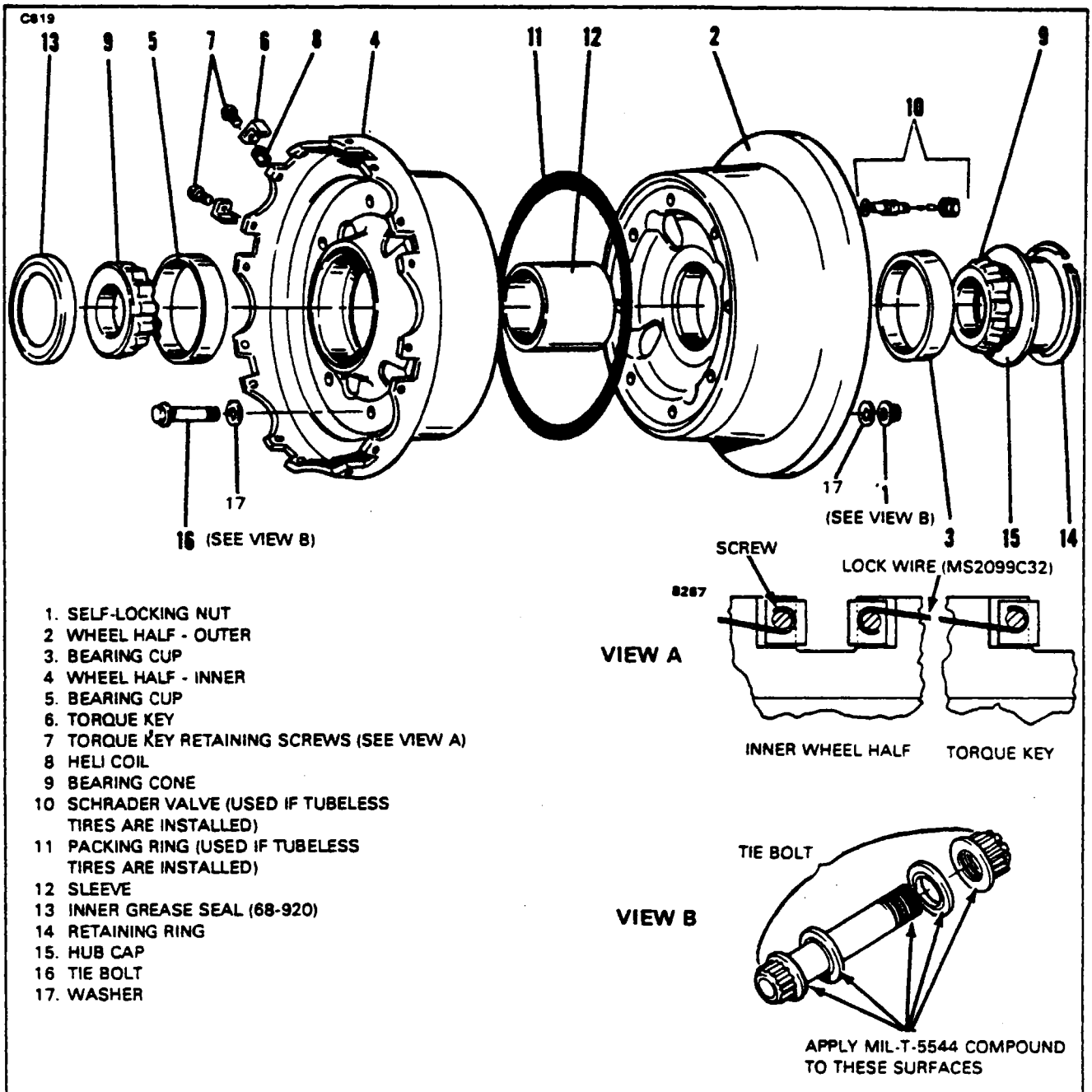

1. SELF-LOCKING NUT
2 WHEEL HALF - OUTER
3. BEARING CUP
4 WHEEL HALF - INNER
5. BEARING CUP
6. TORQUE KEY
7 TORQUE KEY RETAINING SCREWS (SEE VIEW A)
8 HELI COIL
9 BEARING CONE
10 SCHRADER VALVE (USED IF TUBELESS TIRES ARE INSTALLED)
11 PACKING RING (USED IF TUBELESS TIRES ARE INSTALLED)
12 SLEEVE
13 INNER GREASE SEAL (68-920)
14 RETAINING RING
15. HUB CAP
16 TIE BOLT
17. WASHER

NOTE

At each tire change, visually inspect wheel halves for corrosion, noting especially bead seat area (tire contact surface) and tie bolt holes Corrosion may be removed with 400 grit emery cloth and touched up with Dow No 19 solution or equivalent Prime all treated areas with one coat of urethane primer Bare magnesium is silver in color The protective finish put on wheel halves at the factory is gold colored (Dow No 7 or Iridite No 15) If corrosion cannot be removed by sanding down to bare metal within limits specified in Figure 7-17, wheel half should be taken out of service.

Figure 7-16. B.F. Goodrich Main Wheel Installation (3-1392 and 3-1424)

7-62. CLEANING AND INSPECTION OF MAIN WHEEL ASSEMBLY (B.F. GOODRICH, 3-1392 and 3-1424).

a. Clean all metal parts in dry cleaning solvent or equivalent. Dry with low pressure compressed air.

CAUTION

Do not use cleaning solvents to clean rubber parts. Also, do not spin dry bearings or handle with bare hands.

b. Wipe grease seal (13), packing (11) if installed and sleeve (12) with a clean, dry cloth.

c. Wash bearing cones (9) in uncontaminated cleaning solvent. Manually rotate bearing cage while submerged in cleaning solution. Dry bearing cones.

d. Visually inspect bearing surfaces of bearing cups (3 and 5), and bearing cones (9) for scratches, pitting, corrosion, and tempering discoloration.

e. If it is felt necessary to remove the painted surface, make sure the process used does not remove magnesium surface treatment. Use either an abrasive method or chemical stripper not harmful to magnesium. Both methods of paint stripping are as follows:

NOTE

Avoid removing surface treatment under paint.

1. Abrasive blasting using ground walnut hulls, per specification MIL-G-5634, Type II or III is recommended. This method will not remove surface treatment and does not require masking or removal of bearing cup.

2. Paint can be stripped from wheel halves using solvent paint and lacquer stripper (A-127-8) (Allied Kelite Chemical Co., 2400 East Devon Ave., Des Plaines, Illinois 60018). Commercial paint strippers not harmful to magnesium may be used.

CAUTION

Use paint strippers in a well ventilated area and avoid prolonged inhalation of fumes.

CAUTION

Remove or mask bearing cup prior to paint stripping the wheel half.

3. Thoroughly rinse stripping compound off parts with clean, cold water.

4. Dry parts with low pressure compressed air.

f. Inspect wheel halves, tie bolts, and any other necessary hardware for cracks, adverse distortion, and corrosion. The following procedure should be accomplished after the fifth and third subsequent tire change, for a total of twenty tire changes and at each tire change thereafter.

NOTE

It is not necessary to strip paint to dye-check or flourescent penetrant inspected parts.

CAUTION

Tie bolts (16) and torque keys (6) may be satisfactory inspected with plating intact. No stripping procedures are recommended due to danger of hydrogen embrittlement.

1. Magnetic particle inspect each tie bolt (16) and torque key (6) per MIL-I-6870 (longitudinal magnetization) for fatigue and crack indications. Replace as necessary and especially any torque key cracked, broken, or worn to a thickness of less than .060 of an inch.

NOTE

Because dye checking may stain the wheel it should only be used in the tubewell, especially the bead seat radius where the tire bead heels contact the wheel.

2. Inspect with dye check or fluorescent penetrant the bead seats, tubewell, and especially the web junction areas of the wheel halves (2 and 4).

g. Inspect packing (11) if installed, bearing grease seal (13), and sleeve (12) for pits, cuts and other defects. Replace as necessary.

h. Bearing cages must be free from damage, distortion, and undue wear in roller pockets.

i. Check cups (3 and 5) for loose fit in wheel hubs (press fit required).

j. Wheel halves that have been overheated shall be inspected for Brinell hardness. Wheel halves with hardness values under 60 BHM shall be replaced.

7-63. REPAIR OF MAIN WHEEL ASSEMBLY (B.F. GOODRICH, 3-1392 and 3-1424). Repair to the main wheel assembly are limited to blending out small nicks, scratches, gouges and areas of slight corrosion, plus the replacement of parts which are cracked or badly corroded.

NOTE

Remove rust and blend out small nicks, using fine 400 grit sandpaper.

a. Surface damage on wheel halves can be repaired as follows:

1. Blend damage area over an area of 1/2 inch to 1 inch around damage. Blended surface should be smooth as is possible to obtain with fine (400 grit) emery cloth and free from any abrupt changes in contour.

2. Repair can be made to both sides of a section. DO NOT exceed the combined total removal limit of both sides.

3. Repairs can be made adjacent to each other. Blended areas must not touch or any one blended area can not exceed 3-inches in length.

4. Repair tie bolt holes and faces in accordance with restrictions established in Figure 7-17.

5. Repair damaged O-ring groove, wheel half mating surfaces, and torque key slots (areas G and F on Figure 7-17) with Metalset A-4 or Devcon Aluminum filled epoxy, as follows:

NOTE

Metalset A-4 is available from Smooth-On Inc., 1000 Valley Road, Gillette, New Jersey 07933. Devcon Aluminum Filled Epoxy (Putty-type Devcon F) is available from Decon Corp., Danvers, Mass. 01923.

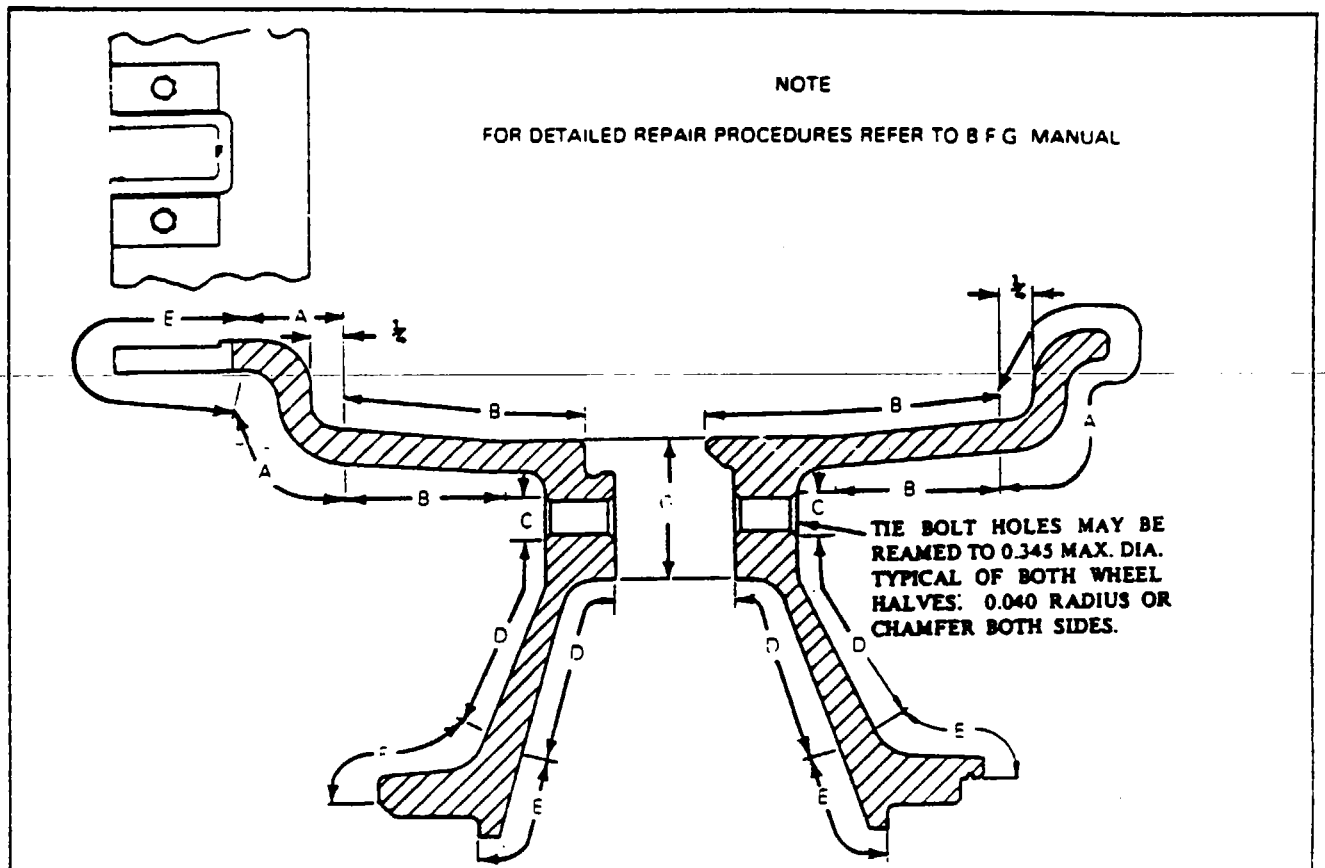

AREA	TYPE REPAIR	REMOVAL LIMIT ON OVERHAUL SECTION THICKNESS	MAX. DISCREPANCY ALLOWED AFTER REPAIR
A	Blend	0.020 below original surface	None after blending
B	Blend	0.10 below original surface	None after blending
C	Ream and radius	Max. dimensions shown	Fretting
D	Blend	0.030 below original surface	None after blending
E	Blend	0.040 below original surface	Dents or gouges 0.020 inch allowed after blending
F	Metalset A4 per B.F.G. Manual	0.040 for clean-up and return to original surface	None after rework- slot width to be 0.745 to 0.760 after rework.
G	Metalset A4 per B.F G. Manual	0.020 below original surface	None after blending

Figure 7-17. B.F. Goodrich Wheel Repair Limits (3-1392 and 3-1424)

(a) With a hand file blend damaged area to provide a minimum patching surface of 1/16 inch square.

NOTE

Maximum patching surface width of O-ring groove x 2 inches long or 1/4 inch x 2 inches long on wheel half mating surfaces.

(b) Remove all surface treatment, dirt, and other contaminants from damaged area. Thoroughly clean with thinner or alcohol.

(c) Thoroughly blend Metalset or Devcon per instructions on respective labels, and apply to reworked areas. Let harden.

(d) After hardening, blend and smooth surfaces to original configuration with a hand file and finish with fine (400 grit) emery cloth.

b. Retreating and repainting can be accomplish as follow:

1. If Iridite No. 15 or Dow No. 7 surface treatment has been removed from the wheel halves, prepare for painting as follows:

(a) Apply chromic acid etch solution (Dow No. 1) by brushing, dipping, spraying, or with a pad. Solution will complete its action in two minutes. Rinse off with cold water.

NOTE

Dow No. 1 Chromic Acid Etch Solution formula:
Chromic Acid: 1 lb.
Nitric Acid (1.4 sp. gr.): 0.9 pint (426CC:13 lb.)
Water: To make one gallon of solution.

(b) Apply Dow No. 19 surface treatment using application procedure in step (a.) above.

NOTE

Dow No. 19 Solution Formula:
Chromic Acid: 1-1/13 oz.
Calcium Sulfate: 1 oz.
Water: To make one gallon of solution.

NOTE

Solutions described in the above NOTES can be safely stored in containers made of glass, stainless steel, aluminum, vinyl, polyethylene, or rubber lined tanks.

(c) After surface treatment, thoroughly air dry parts. DO NOT touch treated surfaces until completely dry.

c. Bearing Cup Replacement:

1. Removal:

(a) Insert wheel half into boiling water or place in an oven not exceeding 80°C (150°F) maximum for 20 minutes.

(b) Remove from source of heat and invert wheel half. If the cup does not drop out, tap the cup evenly from the axle bore with a fiber drift pin or suitable arbor press.

2. Installation:
   (a) Chill new bearing cup in dry ice to -18°C (0°F).
   (b) Remove wheel half from source of heat and spray bearing bore with a light coat of zinc chromate primer before installing cup to prevent corrosion.
   (c) Install the chilled bearing cup into the bearing bore of the heated wheel half, taking care to align cup for proper seating in bore.
   (d) Tap gently to seat cup evenly in place, using a fiber drift pin or suitable arbor press.

NOTE

If cup cocks or hangs up during seating, immediately stop press and remove cup from bore. Repeat previous steps.

NOTE

Always support bearing bore area while seating cup.

d. Wheel Half Finish Treatment:
   1. Ascertain that all repaired areas are surface treated per Step b, 1 above.
   2. Clean all surfaces to be painted by vapor degreasing or by wiping with solvent on a lint free cloth.
   3. Prior to painting mask bearing cups and valve port.
   4. Apply one coat primer, AA-92-Y-43 to all prepared surfaces. Allow to air dry a minimum of four hours.
   5. Install used or new torque keys and screws, and lockwire in sets of two as shown in Figure 7-16.
   6. Mask all areas not to be painted with urethane coating.
   7. Apply two coats of urethane to all surfaces, except register surfaces and mating surfaces, before assembly. Allow four hours elapsed time between overcoats.

7-64. ASSEMBLY AND INSTALLATION OF MAIN WHEEL (B.F. GOODRICH, 3-1392 and 3-1424). (Refer to Figure 7-16.)

a. If bearing cups (3 and 5) have been previously removed, reinstall the bearing cups (3 and 5) in accordance with instructions given in Paragraph 7-63.

b. If valve assembly (10) is installed, install a new grommet on the valve assembly, then install the tire valve assembly (10) in outer wheel half assembly (2). Ascertain that grommet is properly seated before torquing valve stem to 35 to 65 inch pounds.

NOTE

Ascertain that screws (7) which secure torque keys (6) have been lockwired as shown in Figure 7-16.

c. Apply a thin layer of grease per specification MIL-G-3545, to packing (11) if installed and install the lubricated performed packing (11) in seal groove on inner wheel half assembly (4).

d. Install outer wheel half assembly (2) in tire, making sure red dot on tire bead is adjacent to tire valve assembly (10) installed in wheel half.

e. Place on a clean work surface the outer wheel half assembly (2) with the outer flange of wheel half down. On ID register, mark location of stamped L indicating lightside with a piece of chalk.

f. Position sleeve (12) in ID register of outer wheel half assembly (2).

g. Lubricate washers (17) and threads of bolts (16) with anti-seize compound per specification MIL-T-5544, then place washers (17) on tie bolts (16) and install bolts through tie bolt holes in inner wheel half assembly (4).

h. Align inner wheel half over outer wheel half so light sides (L stamp on outer flange of both wheel halves) are approximately 180° apart, and ID register of inner wheel half align with sleeve (12). Tie bolts (16) must align with bolt holes in outer wheel half.

i. Lift wheel and tire assembly up to vertical position ascertain that sleeve (12) has properly seated in hub ID register.

j. Lubricate washers (17) and nuts (1) with anti-seize compound per specification MIL-T-5544, and then install washers (17) and nuts (1) on tie bolts (16).

k. Tighten tie bolts (16) in a criss-cross sequence to 143 to 158 inch pounds using a wrench on bolt and turning the nut to tighten.

l. Using a preset hand torque wrench, final torque nuts (1) to 190 to 210 inch pounds.

NOTE

DO NOT inflate tire until all tie bolts are installed and properly tightened.

m. Pack bearing cones (9) and bearing cups (3 and 5) with grease per specification, MIL-G-3545. Ascertain that there is ample grease in and around rollers and cage.

n. Apply a thin coat of wheel bearing grease to axle, axle threads and axle nut threads.

o. On axle install grease seal (13), inboard bearing cone (9), wheel and tire assembly and outboard bearing cone (9).

p. Check for proper engagement of brake disk lugs in slots in flange of inner wheel half assembly (4).

q. While rotating wheel, tighten axle nut to 50 foot pounds torque to properly seat bearing cones. Loosen axle nut to zero torque and while rotating wheel, retighten axle nut to 25 foot pounds torque.

NOTE

Check alignment of locking holes in axle nut and axle. If holes are not aligned, continue to tighten axle nut until locking holes are aligned.

r. Secure axle nut with cotter pin.

s. Install hub cap (15) over axle nut and secure to wheel with retaining ring (14). Be sure retaining ring (14) completely engages groove in bore of wheel.

t. Remove airplane from jacks.

7-65. BRAKE SYSTEM (GOODYEAR,5002376). The following Paragraphs 7-65 thru 7-71 pertain to Goodyear brakes.

7-66. DESCRIPTION. These brakes are hydraulically operated, tri-metallic type, consisting of two rotating discs, a stationary disc, pressure plate, back plate, torque tube, snow shield and brake housing. Six pistons are contained in cylinders in the brake housing.

7-67. BRAKE WEAR CHECK (GOODYEAR 5002376). (Refer to Figure 7-18.)

a. Apply and release the brakes twice; then apply the parking brake.

b. Using the small hole or four slots in the snow shield (16), measure the distance from the inside surface of the snow shield to the back of the pressure plate (8), note the dimension.

NOTE

A simple modification to the snow shield will simplify the wear-check. Refer to Figure 7-21 for modification details. Compliance with this modification does not alter the FAA TSO conformance.

c. Release the parking brake and rotate the wheel 120 degrees and recheck in accordance with Step "b." Perform this step again to obtain dimensions from three different wheel positions, note the dimensions. (Wheels with modified snow shields need not be rotated.)

d. When the dimensions obtained are 0.278 of an inch or more at any given check, remove the brake assembly for overhaul.

7-68. REMOVAL AND DISASSEMBLY OF BRAKE SYSTEM (GOODYEAR, 5002376). Refer to Figure 7-18.)

a. Place the airplane on jacks. (Refer to Jacking, Section II.)

b. Remove the main wheel assembly in accordance with Paragraph 7-54.

c. Disconnect and cap the hydraulic brake line at the brake assembly and remove the six bolts securing the brake assembly to the landing gear strut.

d. Place the brake assembly with the housing down on a clean flat surface.

e. Remove the six self-locking nuts (2), bolts (3), and countersunk washers (4) holding the assembly.

NOTE

Do not use impact or power wrenches to remove the brake bolts or nuts.

f. Remove the back plate (5), rotating discs (6), stationary disc (7), pressure plate (8), torque tube (17), and snow shield (16) from the brake housing sub-assembly (15).

g. Remove the bleeder valve (12) from the bleeder adapter (13).

h. Remove the piston insulators (9) from the pistons (10).

i. Remove the pistons (10) and O-rings packings (11) from the cylinder cavities in the housing sub-assembly (15).

j. Unscrew the bleeder adapter (13) from the housing sub-assembly (15) and remove the O-ring packing (14), completing the disassembly.

7-69. CLEANING AND INSPECTION OF BRAKE ASSEMBLY (GOODYEAR, 5002376). Refer to Figure 7-18.)

a. Clean all metal parts of the brake assembly except the rotating discs (6) in dry cleaning solution, Federal Specification P-D-680 (Stoddard solvent), and dry with filtered compressed air. A soft bristle brush may be used when necessary.

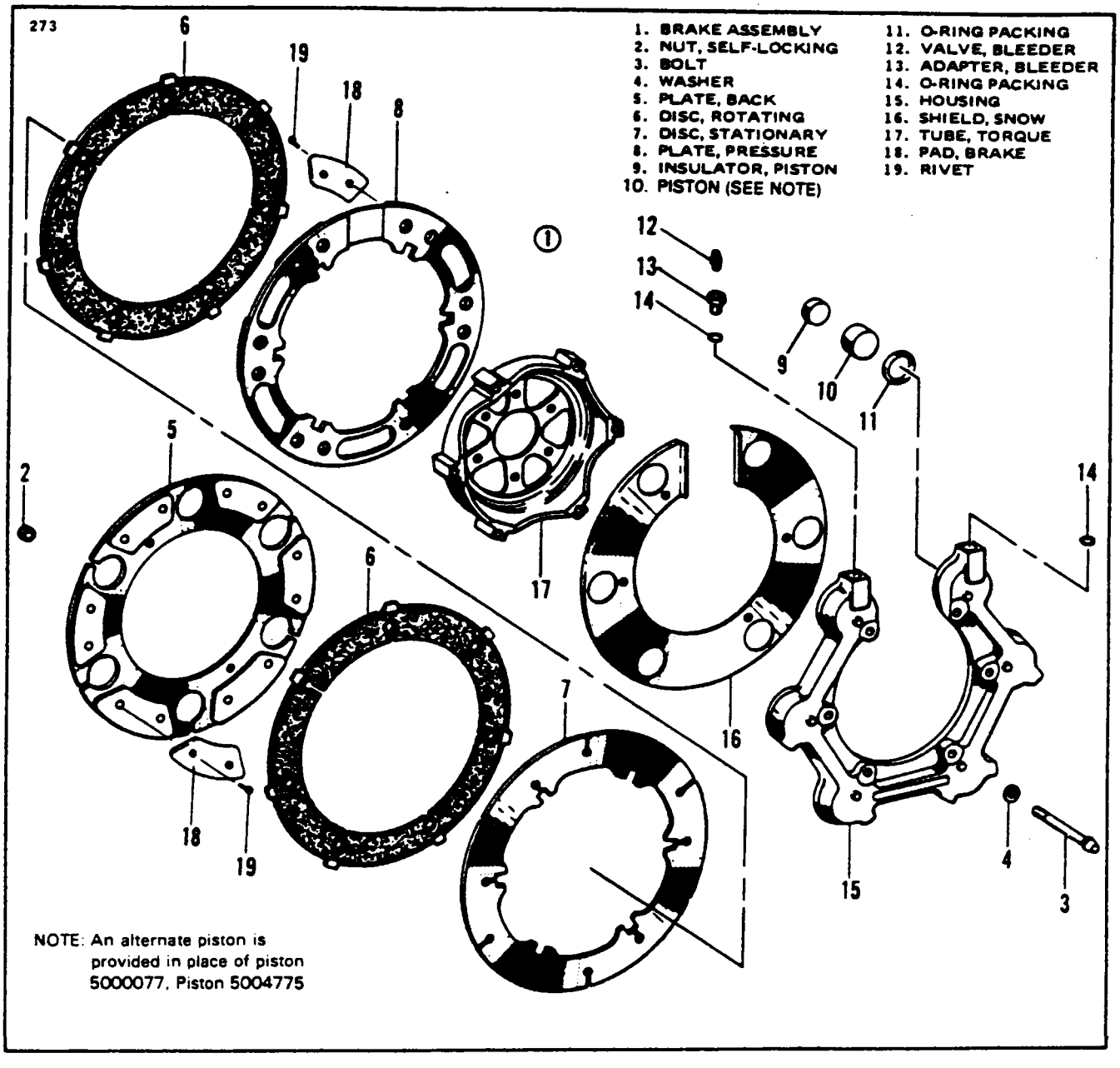

Figure 7-18. Wheel Brake Assembly (Goodyear,5002376)

CAUTION

Dry cleaning solvents are toxic and volatile. Use in a well-ventilated area. Do not inhale the vapors and avoid contact with skin or clothing.

b. Clean the rotating disc (6) with compressed air and a soft wire or stiff bristle brush.
c. Clean piston insulators (9) with denatured alcohol. Dry with compressed air or a clean cloth.

NOTE

New O-ring packings should be installed at each overhaul. If the packings must be reused, they should be cleaned with denatured alcohol and dried with a clean, soft cloth. Reinstall packings in the same location from which they were removed.

d. Inspect all parts for cracks, nicks, scratches, damaged threads, or other damage called out in Table VII-II, Inspection Limits

NOTE

Replace all parts which are cracked or have damaged threads.

7-70. REPAIR OF BRAKE ASSEMBLY. (GOODYEAR, 5002376).

a. Replace all parts of the brake assembly which are cracked or worn in excess of the limits given in Table VII-II.

b. Pressure plate (8) and back plate (5) can be repaired in accordance with the following steps:

1. To remove the wear pads from either plate, drill out the shop heads of old rivets using a 0.218 inch drill and punching out the old rivets.

CAUTION

Exercise care to avoid damaging or enlarging the rivet holes.

2. Before repadding either plate, inspect it for cracks using zyglo or dye-penetrant method. Replace plates which are cracked or dished 0.015 inch or more.

3. Install new wear pads using the proper rivets and rivet tools shown in Figure 7-20, which can be fabricated from dimensions given by a local shop. Ascertain that the formed (shop) head of the rivet is flush with or below the surface of the wear pad.

NOTE

After pad installation, check rivets for snugness. A slight movement of wear pads is desirable. It should be determined that a force of not less than 2 pounds or more than 100 pounds is required to cause movement of pad.

A maximum of one crack is permitted in the shop head of a tubular rivet, but it must not extend into the rivet shank. To check rivets that appear unseated, insert a 0.015 inch feeler gauge between the disc and the pad. It should not slide past the rivet.

4. After repadding, grind the wear padded sub-assembly to the thickness as shown in Figure 7-22. This may require locating a local machine shop to accomplish.

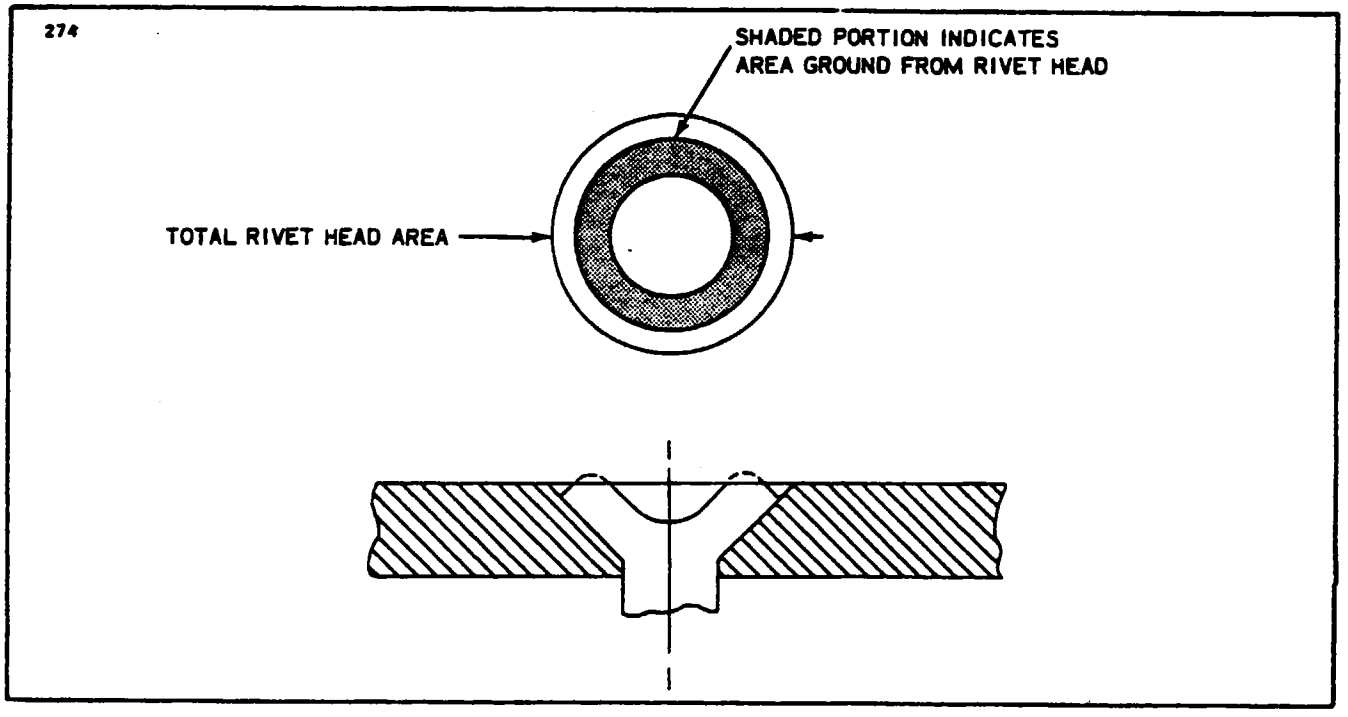

Figure 7-19. Rivet Head Grinding Limits (Goodyear,5002376)

NOTE

Wear pads must be ground flat to each other with assurance that the minimum dimensions shown in Figure 7-23 are held. Not more than 25 percent of the rivet head shall be removed by grinding. (Refer to Figure 7-19.)

c. Protective Coating: Treat newly ground back and pressure plates which are not being put into immediate service as follows:

1. Degrease discs in a vapor degreaser to remove all oil and grinding residue.
2. Immerse disc in "Houghton's" Rust Veto 377 or equivalent. Use in the as-received condition without dilution. Let discs drip and air dry for five minutes or more. Clean, compressed air may be used to help speed drying time.

CAUTION

Rust Veto is highly flammable. Observe all fire precautions when using this material.

d. Torque tube (17) repair is limited to blending out indentations in drive keys if they don't exceed 0.545 of an inch.

e. Housing (15) repairs are as follows:

1. Blend and polish out burrs, nicks, and scratches not deeper than 0.030 of an inch on the outside of the housing with 320-360 grit (wet-or-dry) aluminum oxide cloth.

517

NOTES

1. MATERIAL - AISI TYPE S5 HARDEN TO ROCKWELL C-50-55 AND GRIND.
2. TO BE USED ON ROUND-HEAD RIVETS ONLY - STYLE GY18B (1/4 DIA.).
3. FOR USE ON COMPRESSION RIVETER - CHICAGO PNEUMATIC TOOL CO. P/N 450.

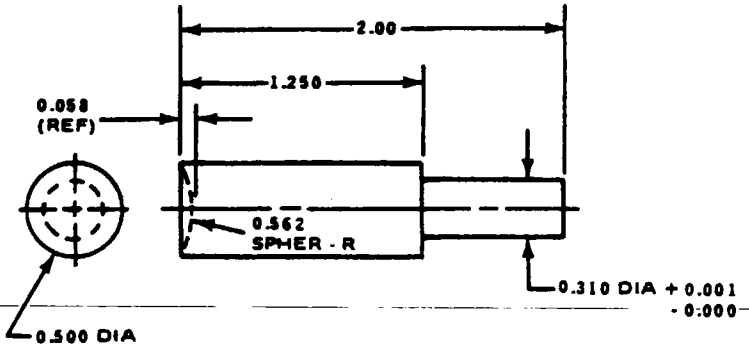

ROUND-HEAD RIVET DRIVER 49523-2

NOTES

1. MATERIAL - AISI TYPE S5
2. HEAT TREAT - ROCKWELL "C" (48-50) AND POLISH CONTOUR AREA FREE OF TOOL MARKS 5 TO 10 RMS AFTER HND
3. SERVICE - GY18A, GY18B RIVETS (SEMI-TUBULAR RIVETS)
4. EDGE OF FORMING TOOL MUST BE ON CENTER LINE OF PEEN (AS SHOWN WHEN FORMING CONTOUR OF PEEN). (TOOL NO. 5T1-71219)

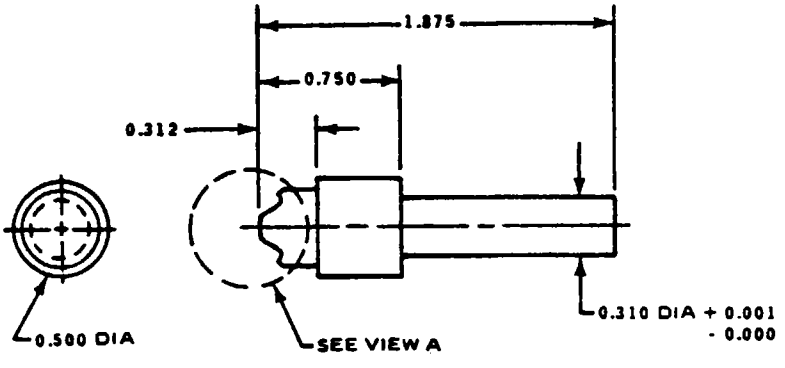

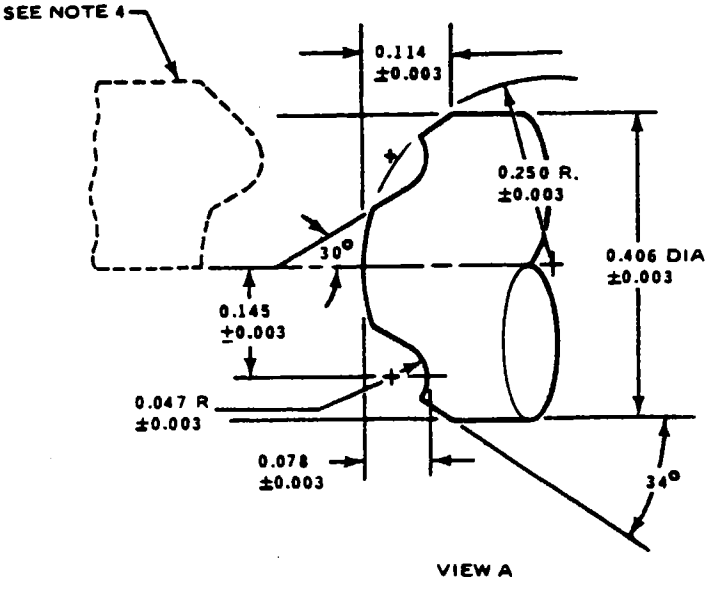

SWAGING PEEN 49523-3

Figure 7-20. Fabricated Rivet Tools (Goodyear, 5002376)

518

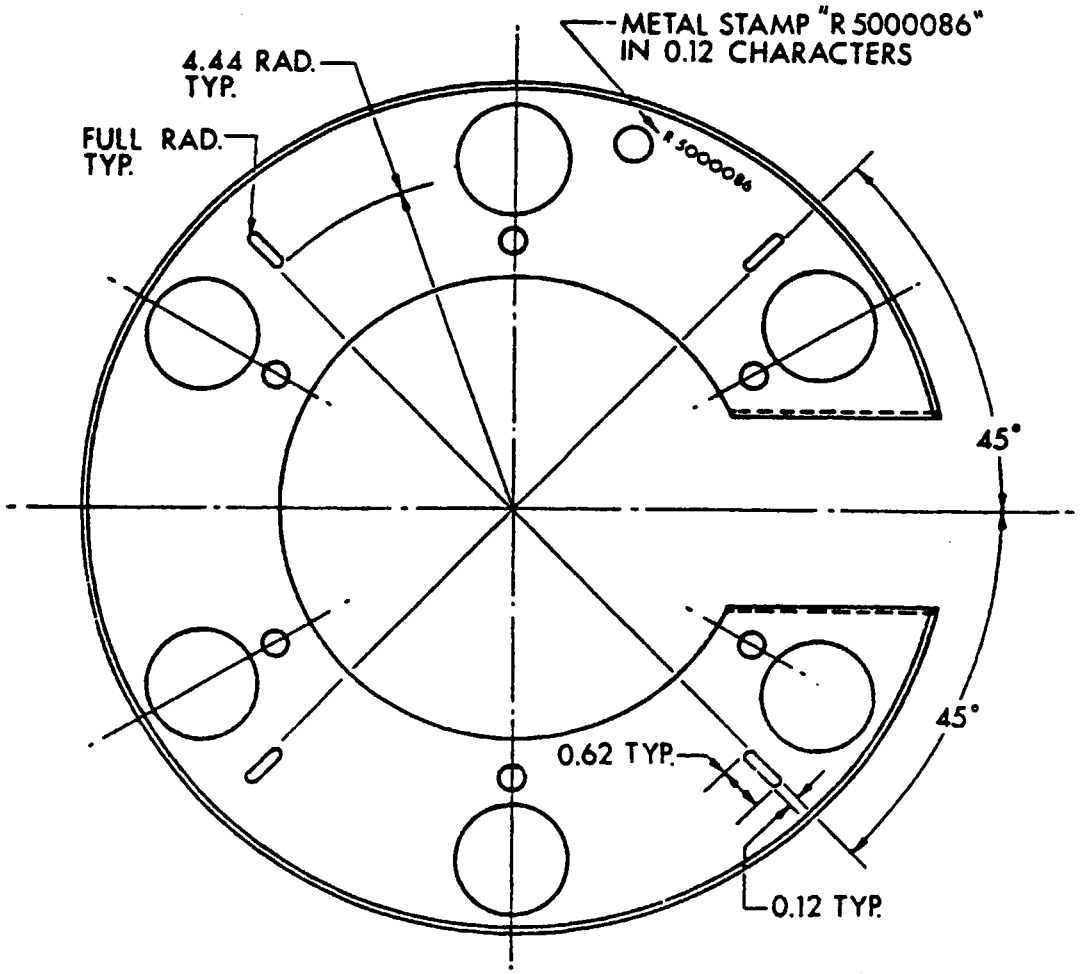

INSTRUCTIONS:

1. Disassemble brake assembly per Paragraph 7-68 and remove snow shield.
2. Add four slotted holes to snow shield as shown above. Pilot drill and cut slots as required. No special tools required.
3. Metal stamp R5000086 in 0.12 inch characters as shown above.
4. Touch-up slots with Aluminum Lacquer Specification TT-L-32.
5. Reassemble brake assembly per Paragraph 7-71

Figure 7-21. Snow Shield Modification (Goodyear, 5002376)

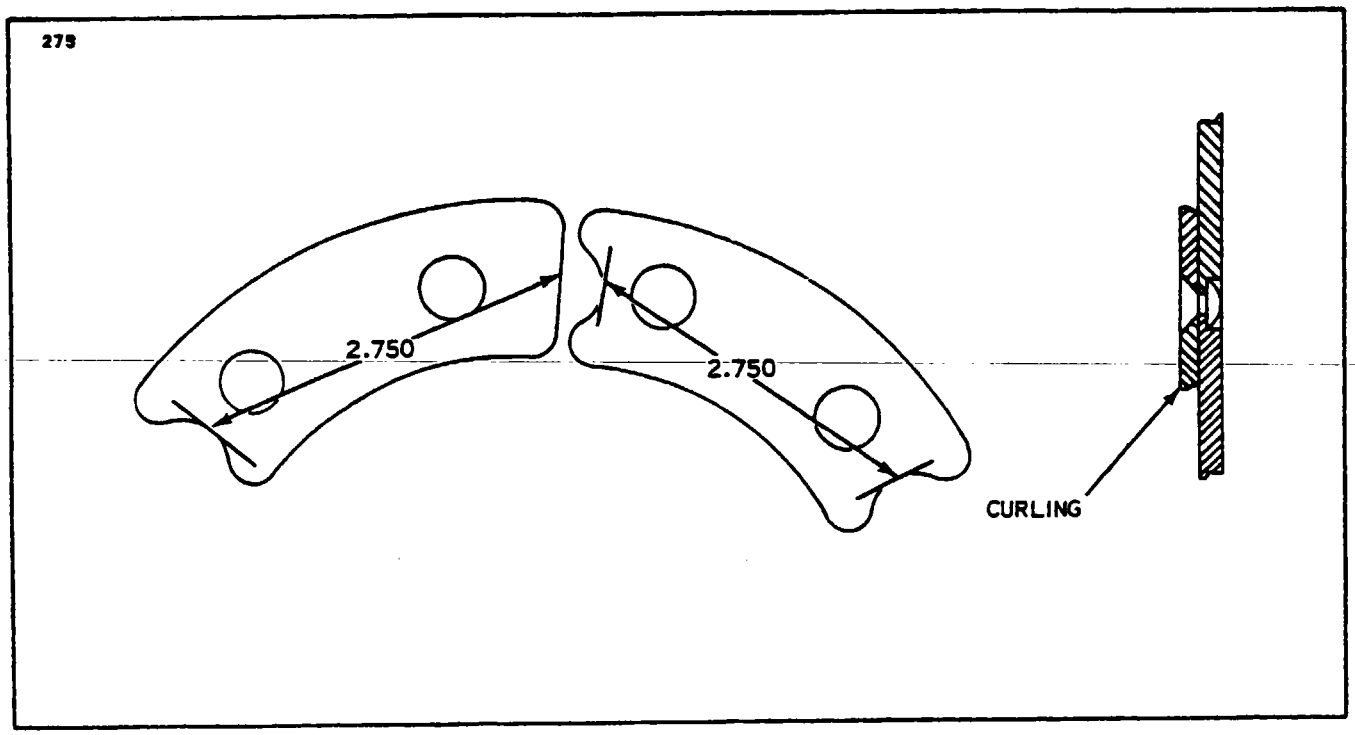

Figure 7-22. Wear Pad - Wear Limits (Goodyear, 5002376)

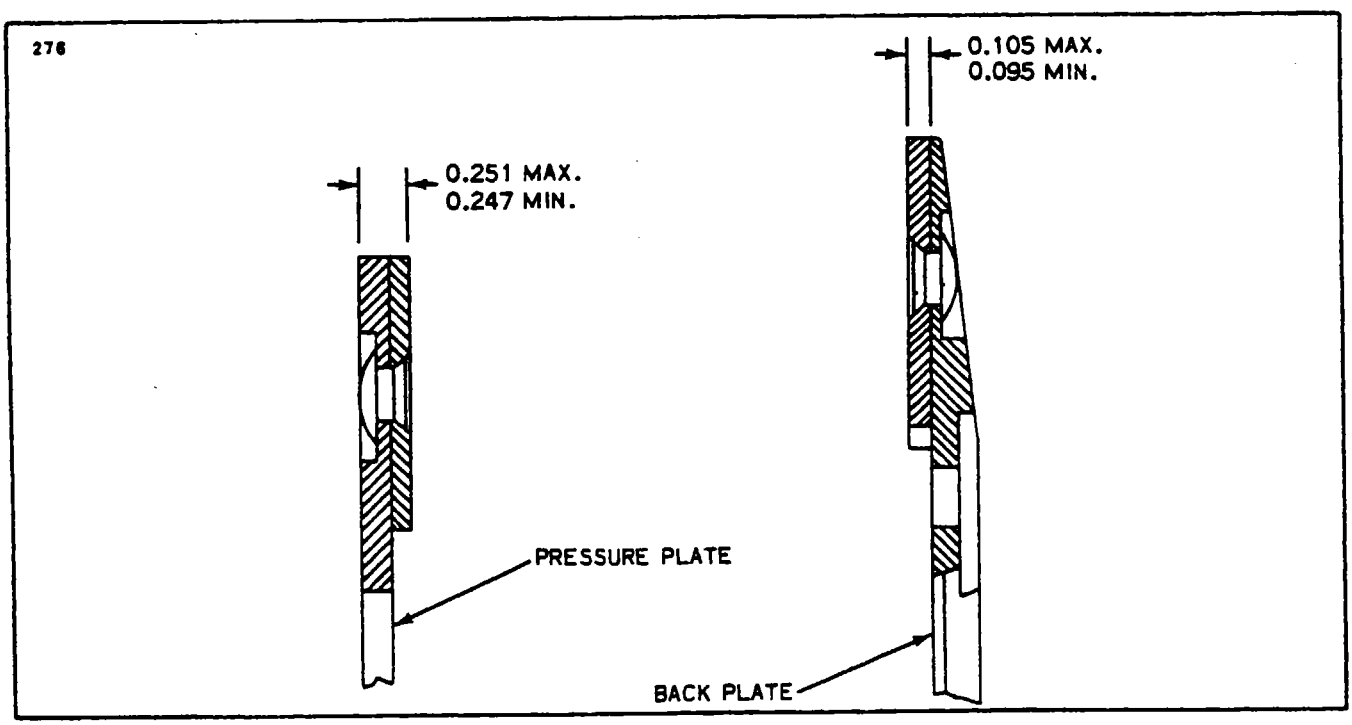

Figure 7-23. Limits for Repadded Pressure and Back Plates (Goodyear, 5002376)

2. Blend and polish out scratches in piston cavities not exceeding 0.003 of an inch deep with fine 320-360 grit (wet-or-dry) aluminum oxide cloth. Also remove burrs and rough edges from seal grooves to a 0.010 to 0.015 of an inch radius with 320-360 grit (wet-or-dry) aluminum oxide cloth.

f. Piston (10) repairs consists of blending out and polishing scratches, nicks, and burrs on edges and seal contacting surfaces of the piston to 0.003 of an inch deep. Blend repairs to avoid local indentation of piston seal surfaces. Replace pistons damaged deeper than 0.003 of an inch. Also, replace, if found on Goodyear piston part number 5004775 signs of scratches or corrosion which have penetrated through anodic hardcoat to the base metal. Retreat pistons as follows:

1. After repairing Goodyear piston part number 5000077 retreat the reworked areas with Dichromate solution MIL-M-3171 Type VI.

2. After repairing Goodyear piston part number 5004775 retreat the reworked areas with a chemical film solution MIL-C-5541 (Alodine 1200, or equivalent).

g. Retreating and Repainting Housing, proceed as follows:

1. Rinse reworked areas with hot water and dry thoroughly with filtered, dried compressed air.
2. Re-treat reworked areas with Dow No. 1 solution MIL-M-3171, Type I.
3. Repaint reworked areas with two coats of zinc chromate primer, Specification MIL-P-8585, and two coats of aluminum lacquer, Specification TT-L-32.

7-71. ASSEMBLY AND INSTALLATION OF BRAKE ASSEMBLY (GOODYEAR 5002376). (Refer to Figure 7-18.)

a. Lubricate the piston O-ring packing (11), piston cylinder walls, and cylinder contacting surfaces of the piston (10) with hydraulic fluid MIL-H-5606.

CAUTION

Assemble brake parts with care to avoid damaging.

b. Install lubricated piston packings (11) in packing grooves in cylinders in brake housing, being careful not to stretch or twist packings.

c. Install insulator (9) in recess in pistons and install pistons in cylinders in housing (15). Bottom the pistons in the cylinders.

CAUTION

To avoid damaging or displacing O-ring packings during piston installation, a slight twisting of the piston will aid installation.

d. Lubricate the threads of the adapter (13) and O-ring packing (14) with a light coat of hydraulic fluid MIL-H-5606. Install the packing on the bleeder adapter and screw the adapter into the bleeder port in the housing (15) and tighten.

NOTE

Both the inlet and bleeder ports on the housing are identical to permit mounting the brake on either side of the airplane.

e. Screw the bleeder valve (12) into the bleeder adapter (13).

f. Install washers (4) on brake bolts (3) with the countersink facing the bolt head, and install bolts through bolt holes in the housing (15).

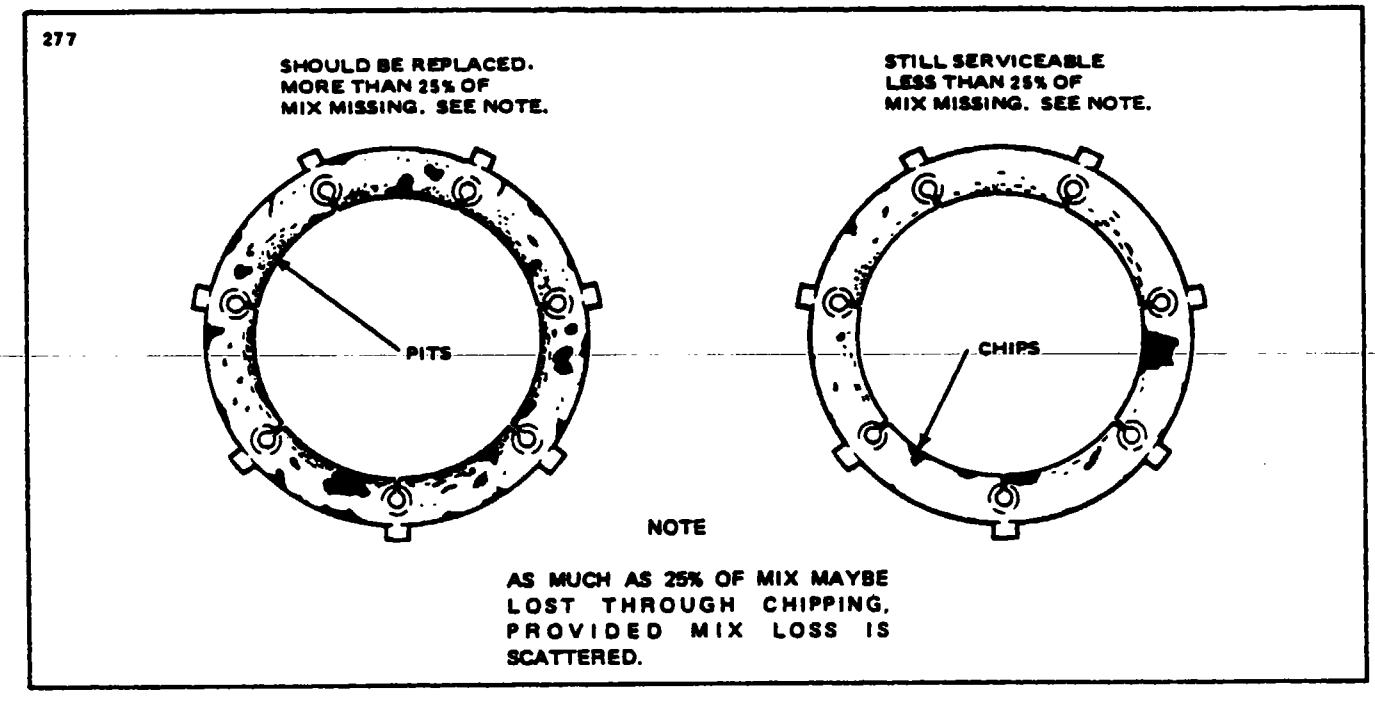

Figure 7-24. Brake Disc Visual Check for Serviceable Limits (Goodyear, 5002376)

CAUTION

Washer countersink must face the bolt head or bolt failure may result.

g. Place the brake housing (15), with bolt in bolt holes, on a clean flat surface with the pistons facing up.

h. Install the snow shield (16) over the brake bolts (3) and against the brake housing (15). The rim flange of the snow shield must be toward the brake stack and the cut out portion must be located between the open arms of the housing (15).

i. Place the torque tube (17) over the brake bolts with the open end of torque tube toward the housing and against the snow shield.

j. Install the pressure plate (8) with the wear pads up, over the torque tube with the thin section of the pressure plate located at the top of the housing between the open housing arms.

k. Install one rotating disc (6) over the torque tube.

l. Install the stationary disc (7) on the torque tube with torque tube keys in key slots in the disc. Place the second rotating disc (6) on the stationary disc (7).

m. Install the back plate (5), with wear pads down, on the torque tube with bolts through bolt holes in the back plate.

n. Install self-locking nuts (2) on brake bolts (3). Draw nuts up evenly and torque to 120 inch-pounds.

CAUTION

Do not use impact or power wrenches to install or tighten brake bolt nuts.

TABLE VII-II. INSPECTION LIMITS (GOODYEAR,5002376)

PART (Refer to Figure 7-18)	DEFECT	REMEDY
Rotating Discs (6)	Relief slot terminal holes and drive tang radii cracked.	Replace.
	Wear, minimum thickness across unchipped mix of 0.148 inch or worn to 0.010 inch at any location on either face of disc.	Replace.
	NOTE As much as 25 percent of mix may be lost through chipping, provided the mix loss is scattered. (Refer to Figure 7-24.)	
	Dishing of discs in excess of 0.030 inch.	Replace.
	Discs which are 0.125 inch or more out of round.	Replace.
	Battered tangs which are less than 0.615 inch in width.	Replace.
	Shrunken discs with an inside-diameter of less than 7.79 inches.	Replace.
Pressure Plate (8)	Key-slot corners cracked.	Replace.
	Worn to 0.225 inch or less between wear pad rivets.	Replace.

TABLE VII-II. INSPECTION LIMITS (GOODYEAR,5002376) (cont.)

PART (Refer to Figure 7-18.)	DEFECT	REMEDY
Pressure Plate (8) (cont.)	Sheared rivets or cracked wear pads and worn to 2.75 inches as shown in Figure 7-22.	Replace all wear pads in accordance with Paragraph 7-70.
	Key-slot width is less than 0.615 inch or greater than 0.640 inch.	Replace.
	Dished 0.030 inch or more.	Replace plate.
	Out of round 0.120 inch or more.	Replace plate.
Torque Tube (17)	Cracked torque tube.	Replace.
	Key width is 0.545 inch or less at any point on key.	Replace.
Brake Housing (15)	Cracked housing.	Replace.
	Stripped or badly damaged threads in inlet and bleeder bosses.	Replace.
	Cylinder cavities worn in excess of 1.380 inches in diameter.	Replace.
	Nicks, scratches and corrosion.	Repair in accordance with Paragraph 7-70.

TABLE VII-II. INSPECTION LIMITS (GOODYEAR,5002376) (cont.)

PART (Refer to Figure 7-18)	DEFECT	REMEDY
Piston (10)	Diameter of pistons is 1.362 inches or less measured at three places around circumference.	Replace.
	Burrs, scratches, or nicks greater than 0.003 inch deep on seal surfaces.	Replace.
NOTE Pistons with damage less than 0.003 of an inch can be repaired in accordance with Paragraph 7-70.		
Stationary Disc (7)	Cracked relief slot terminal holes and key-slot corners.	Replace.
	Disc worn to 0.171 inch or less.	Replace.
	Disc dished in excess of 0.030 inch.	Replace.
	Inside diameter of disc interferes with torque tube.	Replace.
	Key-slots worn and battered to less than 0.590 inch or greater than 0.640 inch in width.	Replace.
	Inside diameter of disc to 7.10 inches or less, measured between ends of keyway tangs.	Replace.

TABLE VII-II INSPECTION LIMITS (GOODYEAR, 5002376) (cont.)

PART (Refer to Figure 7-18)	DEFECT	REMEDY
Back Plate (5)	Cracks around relief slot holes.	Replace.
	Wear pads worn to 0.090 inch or less in thickness from face of pad to surface of back plate, or if pad width is less than 2.75 inches, as shown in Figure 7-23.	Replace all pads, in accordance with Paragraph 7-70.
	Plate dished in excess of 0.015 inch.	Replace.
Bolts (3)	Thread damage, cracks under head and in threads adjacent to bolt shank and bent bolts.	Replace.
Insulators (9)	Small blisters not exceeding 0.010 inch.	Grind OFF.
	Worn to 0.220 inch or less in thickness.	Replace.

BRAKE PARTS TOLERANCES

PARTS	PA-31T NEW	PA-31T MIN. THICKNESS
STATIONARY DISC	.190	.171
ROTATING DISC	.240	.148
INSULATORS	.250	.220
PRESSURE PLATE ASSY.	–	.225
BACK PLATE ASSY.	–	.090

NOTE: Refer to Service Manual for detailed service instructions, and Parts Catalog for specific part numbers. Dimensions for new parts will insure using the correct part for the particular installation.

o. Install the brake assembly on the airplane and secure with six mounting bolts.

p. Connect the hydraulic brake line and bleed the brakes in accordance with Paragraph 7-96.

q. Apply and release brake pressure (600 psi) several times and check for proper brake action. The rotating discs (6) should be free to rotate when brakes are released. Reapply pressure (600 psi) and hold for 15 to 30 seconds and check the brake assembly for fluid leaks. No leaks are permitted.

r. Align the rotating disc tangs and install the wheel assembly. Adjust the wheel bearings and safety.

s. Re-inflate the tire to operating pressure and remove the airplane from jacks.

7-72. BRAKE SYSTEM (CLEVELAND, 30-106).

7-73. WHEEL BRAKE ASSEMBLY (CLEVELAND, 30-106). Paragraphs 7-72 thru 7-77 pertain to Cleveland brake system.

7-74. BRAKE ADJUSTMENT AND LINING TOLERANCES (CLEVELAND, 30-106). No adjustment of the brake clearance is necessary as they are self-adjusting. Inspection of the lining is necessary, and it may be inspected visually while installed on the airplane. The linings are of the bonded type and need not be replaced until the thickness of any one segment becomes worn to .100 of an inch or unevenly worn.

7-75. REMOVAL AND DISASSEMBLY OF WHEEL BRAKE ASSEMBLY (CLEVELAND, 30-106). (Refer to Figure 7-25 and 7-26.)

a. To remove the brake assembly, first disconnect the brake line from the brake cylinder housing (15). Cap brake line to prevent contamination.

b. Remove the bolts (1) that secure the backing plates (10) and shim (9) to the brake cylinder housing (15).

c. Slide the brake cylinder housing from the torque plate.

d. Remove the pressure plate (6) by sliding off the anchor bolts of the housing.

e. The pistons (4) may be removed by injecting low air pressure in the cylinder fluid inlet and forcing the pistons from the housing.

f. If necessary, the anchor bolts (16) may be removed by using a holding fixture and arbor press. If possible, place the anchor bolts into the holding fixture so that the anchor bolt is piloted while being removed. (Refer to Figure 7-25, Step A.)

CAUTION

Cylinder must be square with arbor in Steps A and B so that the anchor bolts do not cock.

g. Lining replacement can be accomplished by prying the old segments off of the carrier with a screwdriver. To install new pads, apply a light film of glue to the backing material of the pad, and snap the new pad onto the carrier pins. The glue will retain the pads in the correct position when reassembling the brake.

NOTE

If linings are changed, but the pistons are not removed from the cylinder, clean the exposed surfaces of the pistons before displacing the pistons back into the cylinder.

h. Refer to Paragraph 7-76 for cleaning, inspection and repair of wheel brake assembly.

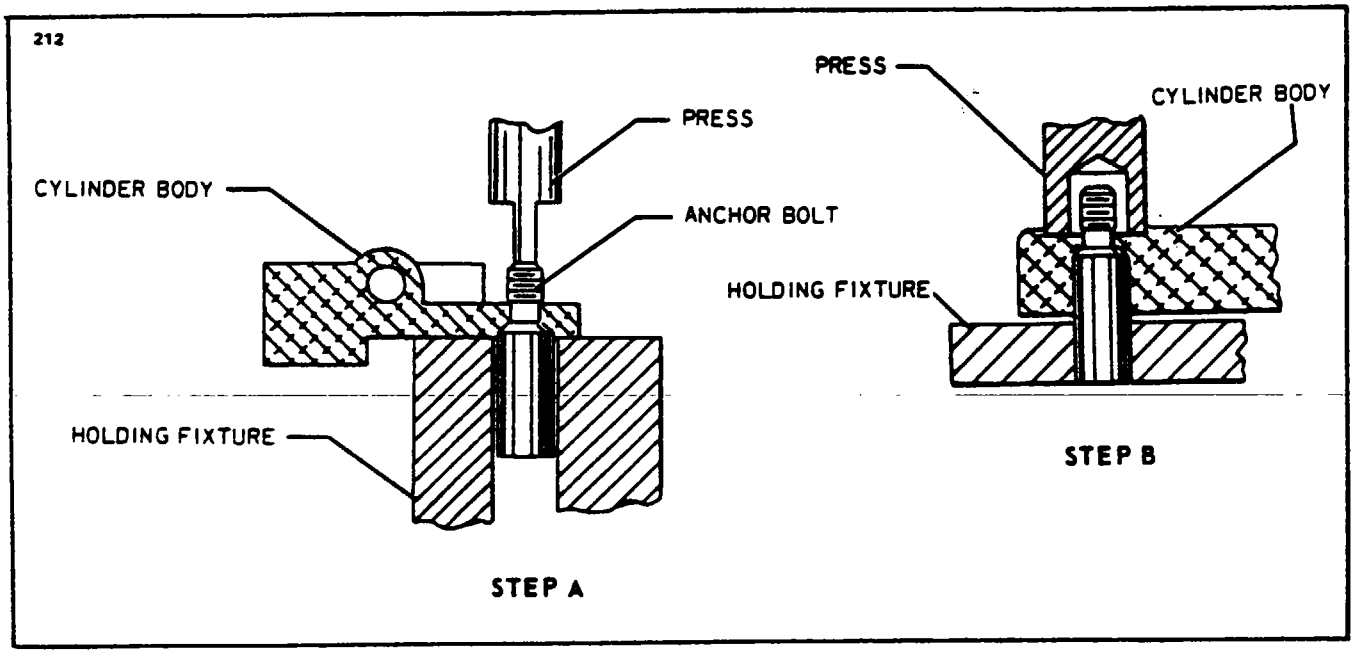

Figure 7-25. Removal and Installation of Anchor Bolts

7-76. CLEANING, INSPECTION AND REPAIR OF WHEEL BRAKE ASSEMBLY.(CLEVELAND,30-106).

a. Clean all metal parts in alcohol or suitable solvent.

b. Clean "O" Rings in denatured alcohol and dry thoroughly.

c. Inspect "O" Rings for cuts, nicks, distortion or excessive wear. If necessary, replace with "O" Rings of corresponding part numbers.

d. Inspect pressure plate and back plates for cracks or warpage. Replace if cracked or severly deformed. Inspect pins for looseness. If loose, tighten with rivet set and anvil, P/N 199-1A and 199-1B or replace backplate and pressure plate assembly.

e. Inspect anchor bolt holes in torque plate for internal corrosion or contamination. If present, clean with emery or apply a light coat of dry lube.

NOTE

For best service life, the cylinders must slide freely in the torque plate.

f. Check the anchor bolt hole and mounting bolt hole areas for elongation or cracks. Badly elongated or cracked parts should be replaced with new parts of corresponding part number. Minor corrosion on the torque plates may be removed with 600 grit emery.

g. Inspect bolts for cracks, thread damage or corrosion and replace if necessary.

h. Inspect brake cylinder(s) for cracks, especially in the lug area around the anchor bolts. Cracks in this area, necessitate cylinder replacement.

i. Small nicks and light corrosion may be blended and removed with emery or sand paper. Any area from which the protective coating is removed, should be thoroughly cleaned, and repainted with one coat of zinc chromate primer, and one coat of aluminum lacquer.

j. Inspect the fitting ports and piston bores for contamination. Light scratches or nicks in the piston bores, pilot bores, or on the chamferred surfaces within these bores may be polished out with 600 grit emery.

NOTE

Nicks and burrs in the pilot bore area can prevent the pistons from properly retracting, resulting in brake drag.

k. Thoroughly clean out any residue upon completion of step j. Any external surfaces around the piston bores from which the protective coating has been removed, should be cleaned, and painted with one coat of zinc chromate primer and one coat of aluminum lacquer.

NOTE

Do not paint internal surfaces of piston bores.

l. Inspect piston for nicks or burrs. remove nicks or burrs by polishing with 600 grit emery. Thoroughly clean before reinstallation.
m. Inspect brake lining for edge chipping and surface deterioration. Refer to Figure 7-26 for maximum wear limits for brake linings and discs. Disc warpage should not exceed .015 inch.
n. Inspect both wearing surfaces of the brake disc for heat checks. Replace brake disc if crack length exceeds 1 inch, or crack depth exceeds .395 of an inch. If crack depth is not measurable, replace disc if crack length exceeds .500 of an inch.

7-77. ASSEMBLY AND INSTALLATION OF WHEEL BRAKE ASSEMBLY (CLEVELAND 30-106). (Refer to Figure 7-25 or 7-26.)

a. If removed, press anchor-bolts (Refer to Figure 7-25) into brake and install washers and nuts. Torque nuts to specification (Refer to Figure 7-26).
b. Install inlet and bleeder fittings.
c. For piston installation, lubricate the piston, "O" ring, and piston bore with a small amount of MIL-H-5606 hydraulic fluid. Place piston in bore and rotate to seat drag ring and insure that piston and seal are in proper alignment. Tap the piston with a wooden or plastic mallet while alternately rotating. If considerable effort is required, remove piston and inspect bore and pilot bore area for damage. If the bore is damaged, check the corresponding area of the piston for damage. Repair, if necessary, and repeat the above procedure.
d. Install pressure plate assembly by aligning anchor bolt holes with anchor bolts and slide onto cylinder. The pressure plate must float freely on the anchor bolts.
e. Install brake assembly to torque plate by aligning anchor bolts with torque plate holes and sliding brake assembly on to torque plate (It must slide freely.)
f. Install washers, cylinder tie bolts, and insulator shim. Install back plate assemblies between brake disc and wheel flange, and align with tie bolts.
g. Re-connect hydraulic lines and bleed system. Check pedal for proper feel and travel.

NOTE

Replacement brake linings should be conditioned by performing two consecutive full braking applications from 30 to 35 kts. Do not allow the brake discs to cool substantially between stops. This conditioning procedure will wear off high spots and generate sufficient heat to glaze the linings. Once the linings are glazed, the braking system will provide many hours of maintenance free service.

Visual inspection of the brake disc will indicate the lining condition. A smooth surface, without grooves, indicates the linings are properly glazed. If the disc is rough (grooved), the linings must be reglazed. The conditioning procedure should be performed whenever the rough disc condition is evident.

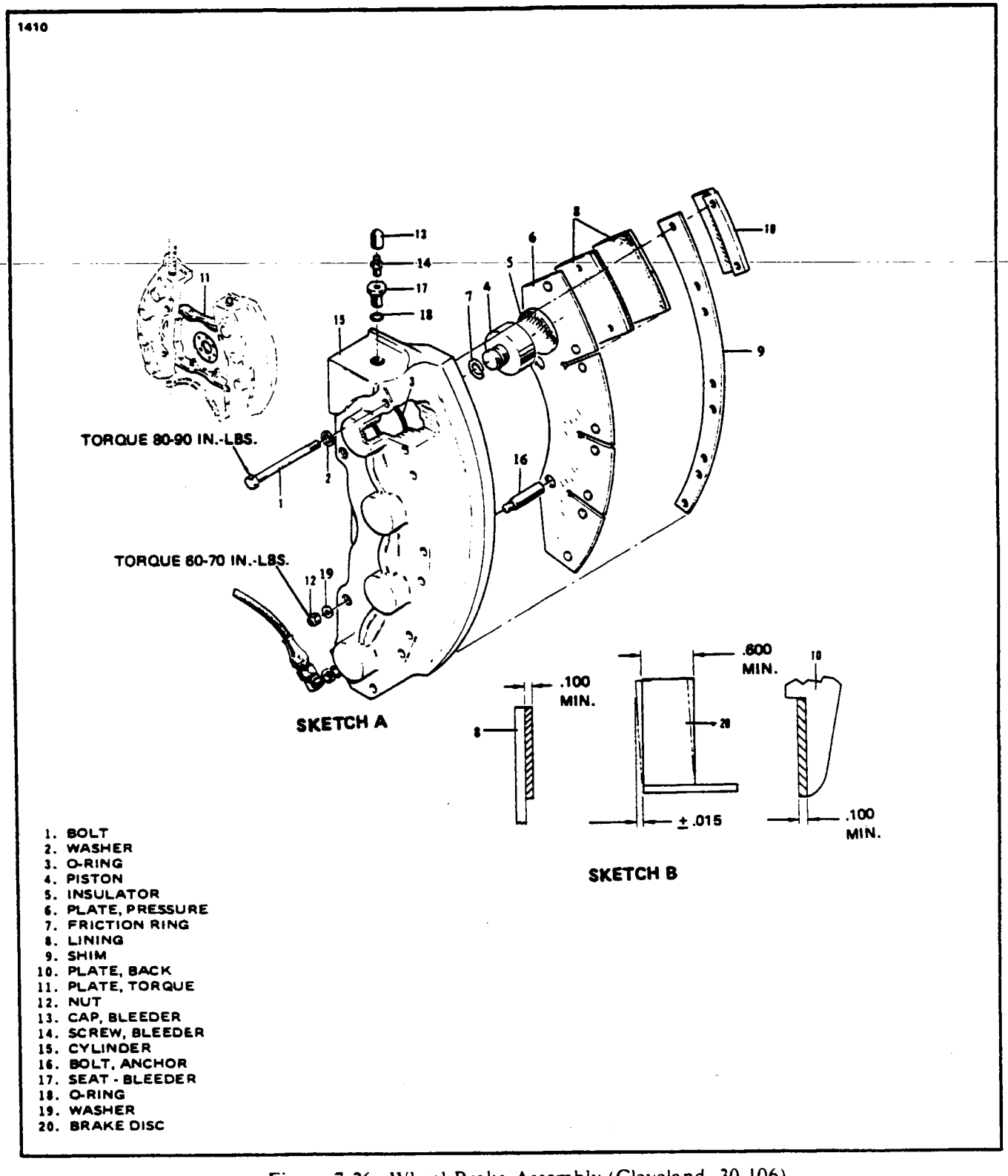

Figure 7-26. Wheel Brake Assembly (Cleveland, 30-106)

7-78. BRAKE SYSTEM (B.F. GOODRICH, 2-1435-2).

7-79. WHEEL BRAKE ASSEMBLY (B.F. GOODRICH, 2-1435-2). Paragraphs 7-78 thru 7-83 pertain to B.F. Goodrich brake system.

7-79a. SERVICE WEAR LIMIT DETERMINATION (B.F. GOODRICH, 2-1435-2). (Refer to Figure 7-27a.) The following inspection procedures should be used during regular inspection intervals to determine whether brake overhaul is required:

a. Pressurize brake to 100 psi.

b. As shown in Figure 7-27a, measure the distance between the carrier lining and torque button assembly and the piston housing.

c. Using a feeler gauge, determine if the brake is within limits. A maximum of .35 of an inch is allowed if a larger measurement is indicated the brake should be removed for overhaul.

NOTE

A shiny mark on the O.D. wear face of lining carrier assembly is not a criteria for brake removal. This condition is created by the carrier, lining and torque button assembly overhanging the lining carrier assembly.

7-80. REMOVAL AND DISASSEMBLY OF WHEEL BRAKE ASSEMBLY (B.F. GOODRICH, 2-1435-2). (Refer to Figure 7-27.)

a. Place the airplane on jacks. (Refer to Jacking, Section II.)

b. Remove the main wheel assembly in accordance with Paragraph 7-61.

c. Disconnect and cap the hydraulic brake line at the brake assembly and remove the six bolts, washers and nuts. Lift brake off over axle.

d. Place the brake assembly in the vertical position on a clean flat surface. Be sure bleeder valve (2) and inlet port are facing upwards.

e. Remove the bleeder valve (2) and cap from inlet port.

f. Drain the hydraulic fluid into a container.

g. Remove the six bolts (15) with washer (14) securing the torque plate (13) to the piston housing (1).

h. Place the brake assembly with torque plate (13) facing upwards on a clean flat surface and lift off torque plate (13).

i. Remove spacer (12). Replace if damaged on removal.

j. Remove insulators (11). Insulators (11) may stick to carrier, lining and button assemblies (10), and may have to be pryed loose. If insulators are damaged during removal, replace with new ones.

k. Remove carrier, lining and torque button assemblies (10).

l. Remove disk carrier and lining assembly (9).

m. Remove the piston insulators (8) from the pistons (7).

n. Remove pistons (7) by threading a 10-32 UNF screw into tapped hole in each piston (7) and pull all pistons out of piston housing assembly (1).

o. Remove O-ring packings (6) from groove in each piston.

p. Remove reducer fitting (3) and O-ring (4) from piston housing assembly (1).

q. Remove O-ring (4) from reducer fitting (3).

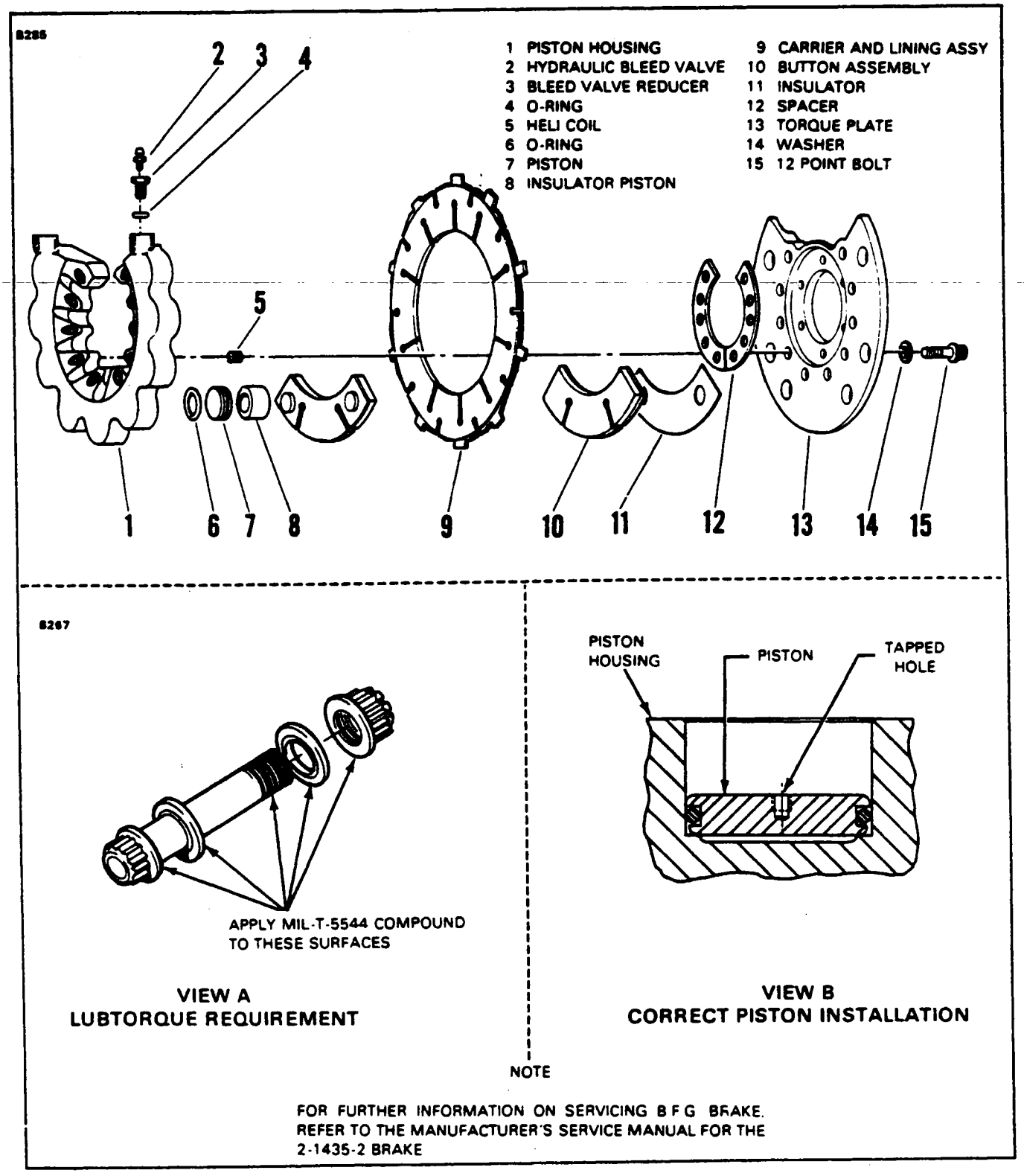

Figure 7-27. B.F. Goodrich 2-1435-2 Brake Installation

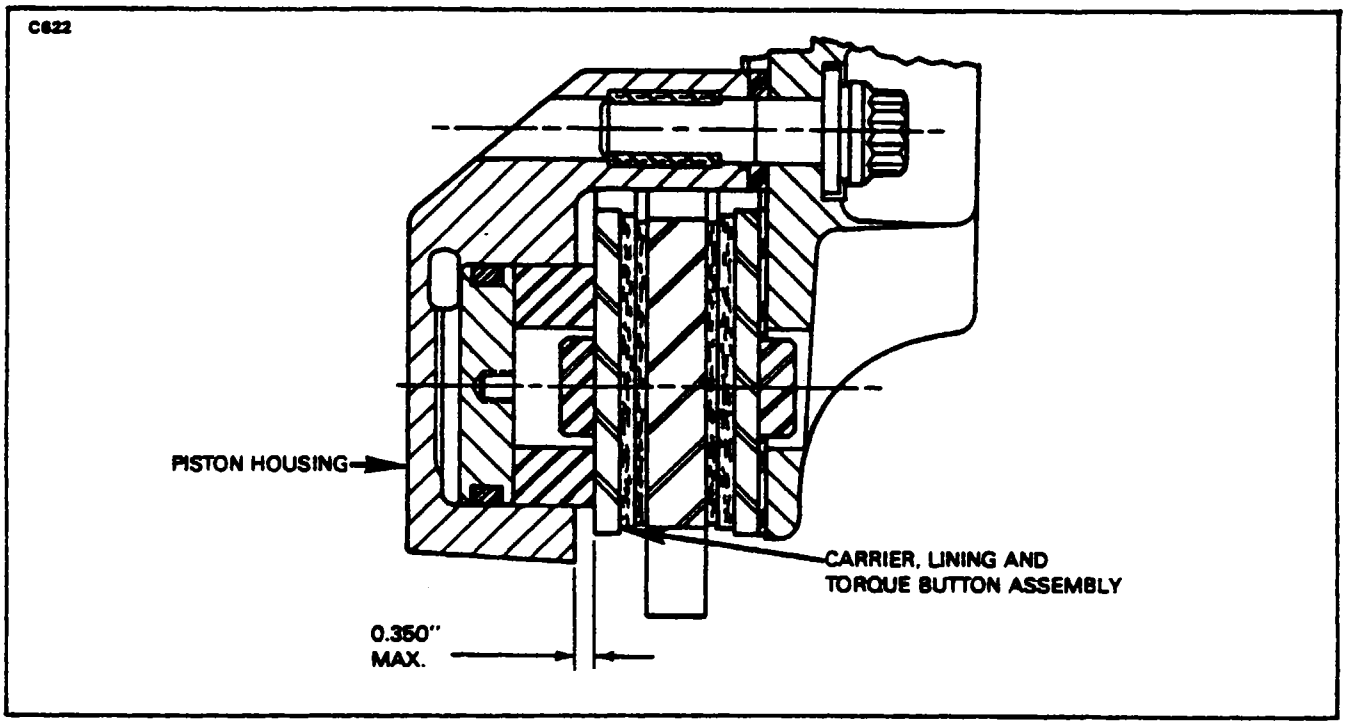

Figure 7-27a. Brake Removal Wear Limit

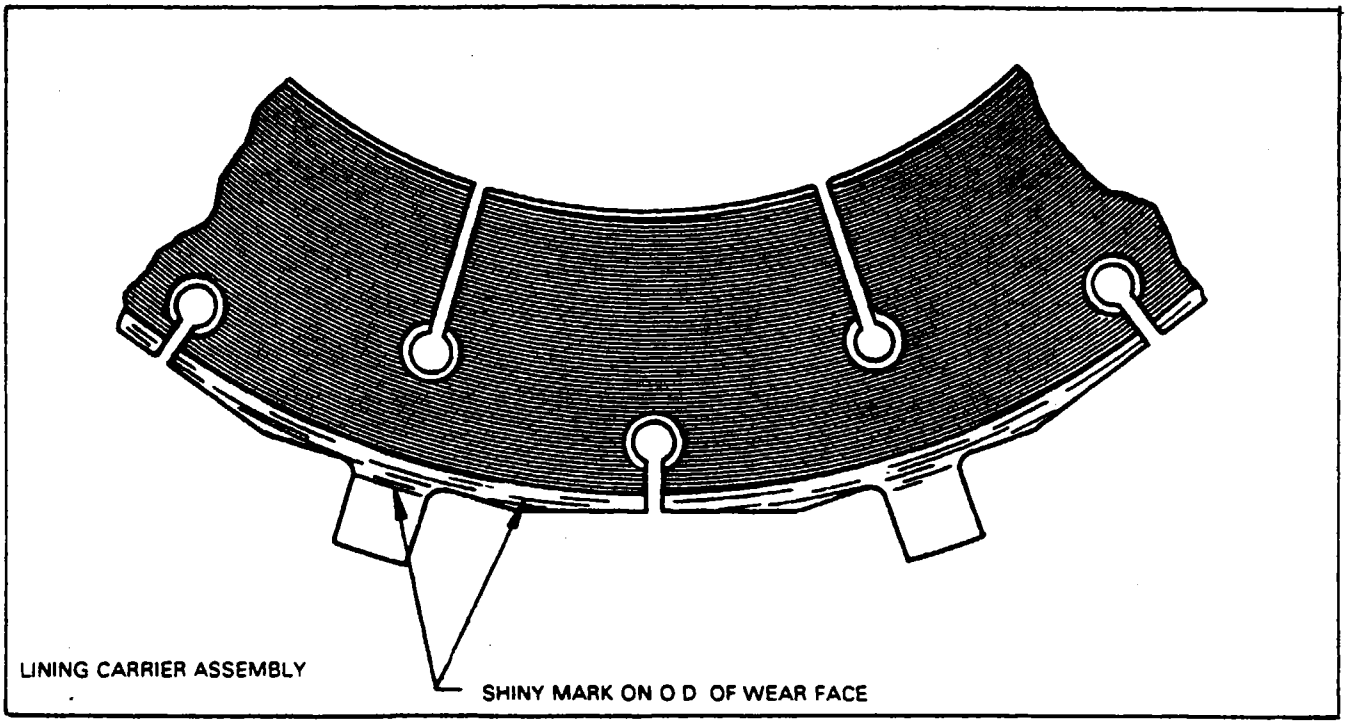

Figure 7-27b. Brake Removal Wear Limit

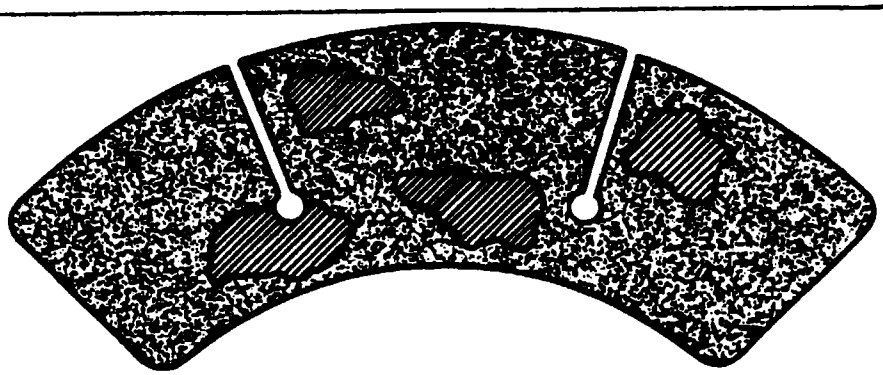

SHADED AREA COVERS 85% OF THE LINING SURFACE AND IS WORN TO A MIMIMUM THICKNESS OF .160 INCHES.

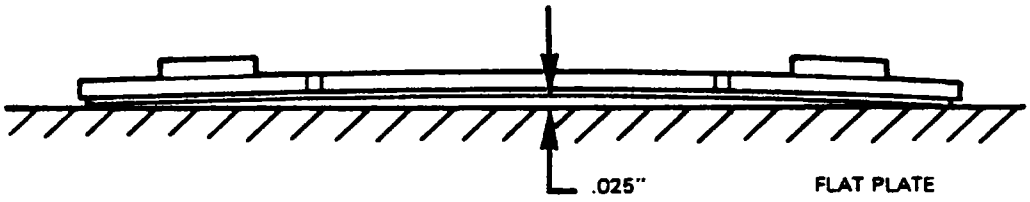

CHECK FLATNESS ON LINING SIDE OF CARRIER. DISHING OF 025 INCHES MAXIMUM REPLACE OR REPAIR PARTS. CARRIER MAY BE COLD FLATTENED WITH A MALLET AND FLAT PLATE

CARRIER LINING AND TORQUE BUTTON ASSEMBLY

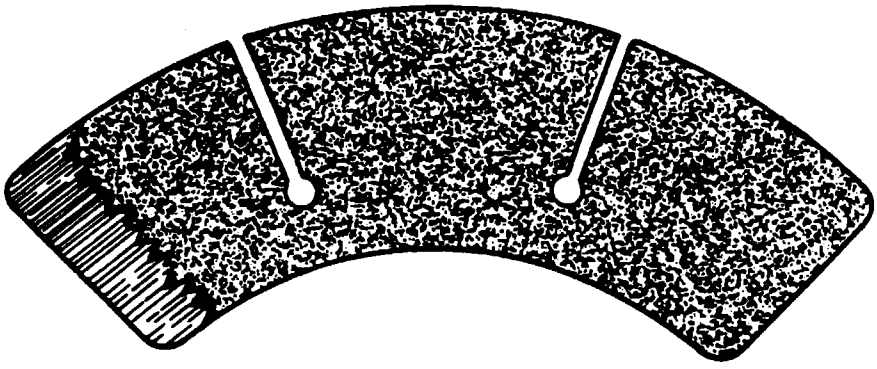

LEADING EDGE WEAR.
THIS CONDITION CAN BE CONSIDERED NORMAL LINING WEAR.

CARRIER LINING AND TORQUE BUTTON ASSEMBLY

Figure 7-27a. Brake Removal Wear Limit (cont.)

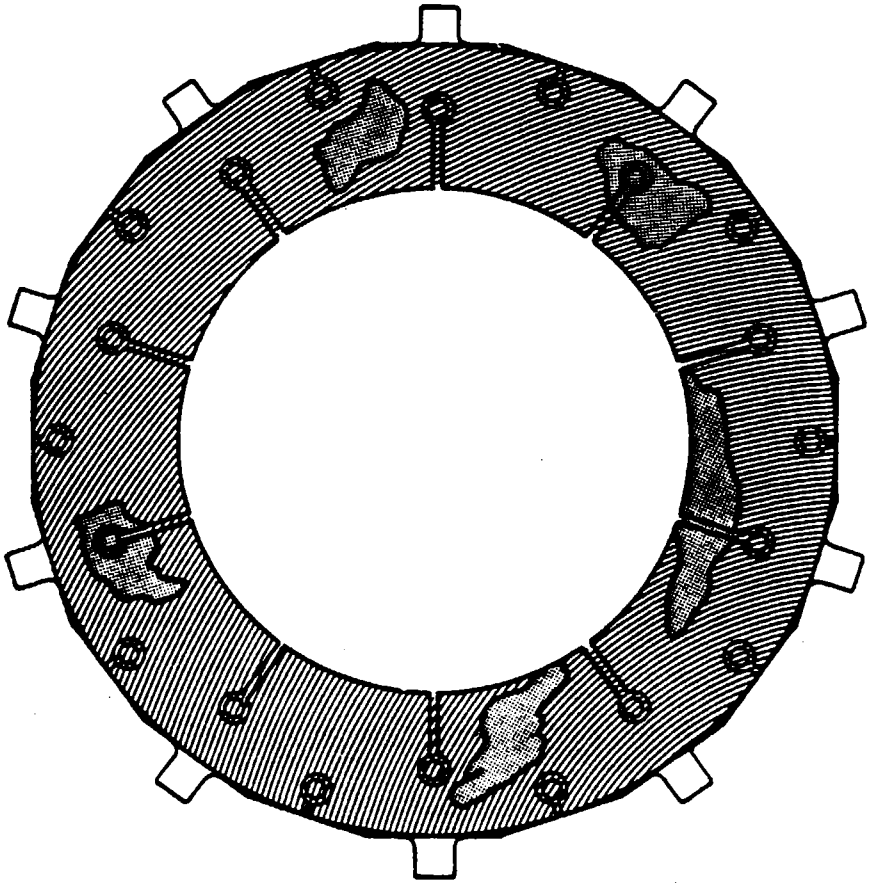

SHADED AREA COVERS 85% OF THE LINING SURFACE AND IS WORN TO A MINIMUM THICKNESS OF .370 INCHES.

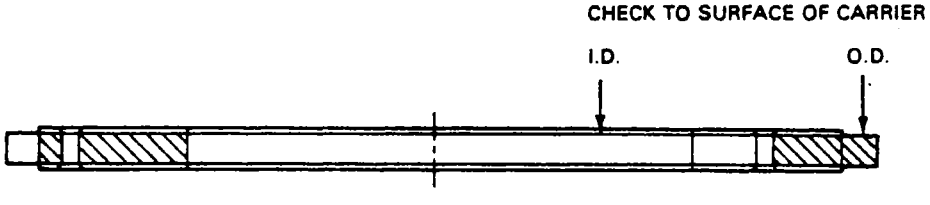

DISHING OF 050 INCHES MAXIMUM FROM O.D TO I.D.

LINING CARRIER ASSEMBLY

Figure 7-27a. Brake Removal Wear Limit (cont.)

7-81. CLEANING AND INSPECTION OF BRAKE ASSEMBLY (B.F. GOODRICH, 2-1435-2). (Refer to Figure 7-27.)

a. Except for the disc carriers and lining assemblies, clean all metal parts in dry cleaning solvent or equivalent. Dry with low pressure compressed air.

CAUTION

Quick drying solvents are toxic and volatile. Use in a well ventilated area. Avoid contact with skin or clothing. Do not inhale the vapors. Protect eyes.

b. If it is felt necessary to remove the painted surface, make sure the process used does not remove magnesium surface treatment. Use either an abrasive method or chemical stripper not harmful to magnesium. Both methods of paint stripping are as follows:

NOTE

Avoid removing surface treatment under paint.

1. Abrasive blasting using ground walnut hulls, per specification MIL-G-5634, Type II or III is recommended. This method will not remove surface treatment and does not require masking.

2. Paint can be stripped from brake using solvent paint and lacquer stripper (A-127-8) (Allied Kelite Chemical Co., 2400 East Devon Ave., Des Plaines, Illinois 60018). Commercial paint strippers not harmful to magnesium may be used.

CAUTION

Use paint strippers in a well ventilated area and avoid prolonged inhalation of fumes.

CAUTION

DO NOT clean rubber packings or insulators with cleaning solvents.

3. Thoroughly rinse stripping compound off parts with clean, cold water.

4. Dry parts with low pressure compressed air.

c. Use a clean, lint free cloth and wipe rubber packings (4 and 6) and insulators (8 and 11). Low pressure compressed air may be used to blow dirt off these parts.

d. Clean all lining surfaces with a stiff bristled brush and low pressure compressed air.

e. Inspect disk carrier and lining assembly for a minimum thickness of .370 inches for 85% of lining surface, and dishing of .050 inches maximum from O.D. to I.D. If either or both of these conditions exist replace part. (Refer to Table VII-III.)

f. Inspect carrier lining and torque button assemblies for a minimum thickness of .160 inches for 85% of the lining surface, and dishing of .025 inches maximum. If either or both conditions exist, replace or repair part. (Refer to Table VII-III.)

g. With dye check or fluorescent penetrant method, inspect piston housing (1), torque plate (13) and pistons (7) for cracks and breaks. Visually inspect threaded holes for damage. Check for burrs, nicks, scratches, gouges, corrosion and other damage.

TABLE VII-III. BRAKE WEAR LIMITS (B.F. GOODRICH,2-1435-2)

Inspection Areas		Disk Carrier and Lining Assembly	Carrier, Lining and Torque Button Assys
Thickness	Max. Min.	0.519 *0.370	0.265 *0.160
Dishing (Flatness)	Max. Min.	0.050 0.000	+0.025 0.000
I.D.	Max. Min.	7.000 6.800	7.000 6.800

*Minimum thickness is for 85 percent of lining surface. This is an overhaul limit only. Parts may wear beyond these dimensions in service.
+Carrier, lining, and torque button assemblies maybe cold flattened with a mallet and flat plate. Check flatness on lining side of segment.

NOTE

Dye checking may stain painted surfaces.

h. Visually inspect all other metal parts for pitting, corrosion, cracks, uneven wear and other surface defects.

i. Inspect packing sealing surfaces for smoothness.

j. Inspect all packings (4 and 6) for pits, cuts, or other defect which could cause leakage. Replace as necessary.

k. Inspect insulators (8 and 11) for chips and signs of disintegration. Replace as necessary.

l. Magnetic particle inspect each bolt (15) for fatigue indications and cracks in accordance with specification MIL-I-6870 (longitudinal magnetization).

CAUTION

Bolts (15) may be satisfactorily inspected with plating intact. No stripping procedures are recommended due to danger of hydrogen embrittlement.

7-82. REPAIR OF BRAKE ASSEMBLY (B.F. GOODRICH,2-1435-2).

a. Replace all parts that are cracked, worn, distorted or damaged beyond repair. Repair and return to service all parts that can be restored to acceptable limits. Refer to Table VII-III.

b. Blend and polish out nicks, scratches, and corrosion from piston housing (1) and torque plate (13) not exceeding 0.015 of an inch deep with fine 400 grit emery cloth.

1. Treat exposed areas with Iridite No. 15 or Alodine 1200 solution.

2. After surface treatment, thoroughly air dry parts. Do not touch treated surfaces until completely dry.

c. Retreating and repainting piston housing (1) and torque plate (13), proceed as follows:

1. Clean all surfaces to be repainted with a lint free cloth or by vapor degreasing the parts.
2. Mask all ports and piston bores.
3. Apply one coat of urethane primer to all prepared surfaces and allow to air dry for a minimum of one hour.
4. Mask all areas where urethane coating is not desirable.
5. Apply two coats of urethane top coat to all surface, except register and mating surfaces, before assembly. Allow two to four hours between overcoats.

NOTE

If piston housing (1) or torque plate (13) has not been completely stripped, but have exposed areas as a result of minor repair, feather existing coatings with 320 grit emery cloth and finish with 400 grit emery cloth to give surface a fine abraded finsh for subsequent touch up. Touch up with applicable surface treatment, one coat of urethane primer and one coat of urethane to touch up top coat, sand area to be touched up with 400 grit emery cloth, wipe away dust, apply one coat urethane top coat.

d. Replace O-rings (4 and 6) as necessary at each overhaul.

e. Replace carrier, lining and torque button assembles (10) when carrier and lining thickness (not including button thickness) is less than 0.160 of an inch.

7-83. ASSEMBLY AND INSTALLATION OF BRAKE ASSEMBLY (B.F. GOODRICH, 2-1435-2). (Refer to Figure 7-27.)

a. Lubricate the threads of the reducer (3) and O-ring packing (4) with a light coat of hydraulic fluid MIL-H-5606. Install the packing (4) on the bleeder reducer (3) and screw the reducer into the bleeder port in the housing (1) and tighten.

b. Screw the bleeder valve (2) into the bleeder reducer (3).

c. Lubricate the piston O-ring packing (6), piston cylinder walls, and cylinder contacting surfaces of the piston (7) with hydraulic fluid MIL-H-5606.

d. Install lubricated piston packings (6) in packing grooves in cylinders in brake housing, being careful not to stretch or twist packings.

e. Lay the piston housing assembly on a clean, flat surface with the piston housing's open side up.

f. With tapped hole in piston facing up press each piston and packing assembly into a piston bore.

g. Install insulator (8) in recess in pistons and install pistions in cylinders in housing (1). Bottom the pistons in the cylinder.

h. Install the carriers (10) with their linings on their pistons.

i. Lay the disc carrier assembly (9) over the piston housing (1) and onto the linings of the piston housing (1).

TABLE VII-IV. TROUBLESHOOTING CHART (BRAKES) (B.F. GOODRICH,2-1435-2)

Trouble	Cause	Remedy
Hydraulic fluid leaking from piston area.	Worn packing(s) (6) Damaged piston(s) (7) or piston bore(s) (1).	Replace packing (6) Replace piston (7) or repair bore (1).
Fluid leaking from bleeder valves or reducer fitting	Loose bleeder valves (2). Damaged bleeder valve (2) Damaged reducer fitting (3) or packing (4).	Tighten bleeders (2) Replace valve (2). Replace reducer (3) or packing (4).
Insufficient clearance (ie DISK CAN NOT BE MOVED WITH HANDS).	Heat stack warped beyond tolerance. Air in system.	Repair or replace parts out of tolerance per REPAIR. Properly bleed brake system and hydraulic lines.

j. Place one insulator (11) on each pair of exposed torque buttons.

k. With mating surface facing down, set spacer (1) and torque plate (13) into piston over exposed torque buttons. Ascertain that all torque buttons fit into torque plate (13).

l. Rotate torque plate (13) to align bolt holes in piston housing (1).

m. Install a washer (14) on each bolt (15). Tighten bolts (15) using a preset hand torque wrench, and tightening the bolts (15) in a criss-cross sequence to 50% (175 to 185 inch pounds) of full torque.

n. Ascertain that all components are properly aligned.

o. Finish tightening the bolts (15) in a criss-cross sequence to 350 to 370 inch pounds using a preset hand torque wrench.

p. Reconnect the hydraulic lines and bleed brakes.

q. Reinstall the wheel by slowly sliding the wheel over the axle and aligning the brake disc carrier teeth with the slots in the wheel.

r. Install the axle nut while making sure the bearings are seating properly. (Refer to Paragraph 7-64.)

7-84. BRAKE MASTER CYLINDER.

7-85. REMOVAL OF BRAKE MASTER CYLINDER.

a. Disconnect the brake lines from the cylinder and place a protective cover over the line openings to prevent contamination of the system.

b. Remove the cylinder from the pedal assembly by removing the clevis pin at the piston rod and the bolt at the top of the cylinder body.

7-86. DISASSEMBLY OF BRAKE MASTER CYLINDER. (Refer to Figure 7-28.)

a. The internal parts of the brake master cylinder (1) may be removed by removing the snap ring (16) from the annular slot at the lower end of the cylinder. Pull the complete piston assembly from the cylinder.

b. Slide the packing gland (15), O-ring (13), washer (11) and spring (10) from the piston rod (12).

c. The piston valve assembly may be removed by first removing the self-locking nut (2) from the piston rod (12). This will allow the piston (8) with component parts to be removed.

7-87. CLEANING, INSPECTION AND REPAIR OF BRAKE MASTER CYLINDER.

a. Clean the cylinder parts with a suitable solvent and dry thoroughly.

b. Inspect the interior walls of the cylinder for scratches, burrs, corrosion, etc.

c. Inspect the general condition of the fitting threads of the cylinder.

d. Check the piston and valve for scratches, burrs, corrosion, etc.

e. Repairs to the cylinder are limited to polishing out small scratches, burrs, etc., and replacing valve washer seal and O-rings.

7-88. ASSEMBLY OF BRAKE MASTER CYLINDER. (Refer to Figure 7-28.)

a. Install O-ring (9) on the cylinder piston (8). Assemble onto the piston rod (12), the piston (8), spring (7), washer seal (6) and valve (5). Allow the valve to extend into the base of the piston. Slide the O-ring and washer (3) in place and secure with self-locking nut (2).

b. Install O-ring seal (14) on the packing gland (15). Slide spring (10), washer (11), O-ring (13), and packing gland (15) onto the piston rod (12).

c. Dip the piston assembly in fluid (MIL-H-5606) and install the assembly into the cylinder (1). Push the packing gland into the cylinder until the snap ring (16) can be installed into the annular slot at the bottom of the cylinder.

7-89. INSTALLATION OF BRAKE MASTER CYLINDER.

a. Compress the piston within the cylinder and adjust the clevis end of the piston rod to obtain 6.69 inches between attachment holes of the cylinder body and the piston rod clevis. Lock the clevis into position with locknuts.

b. Attach the cylinder to the rudder pedal by securing at the cylinder body with bolt assembly and at the clevis with clevis pin.

c. Connect the fluid lines to the cylinder.

7-90. PARKING BRAKE VALVE.

7-91. REMOVAL OF PARKING BRAKE VALVE.

a. Disconnect the parking brake cable from the valve actuating arm.

b. Disconnect the fluid lines from the valve.

c. Remove the screws that attach the valve to its mounting bracket.

d. Place a protective material over the line openings to prevent contamination of the system.

7-92. DISASSEMBLY OF PARKING BRAKE VALVE. (Refer to Figure 7-29.)

a. Remove the two fittings (2) from the outside of the valve body (1). A valve spring (3) is held in place by the fittings. Use caution not to loosen these when removing the fittings.

b. From the valve body, remove the valve spring (3) and valve (4).

c. To remove the valve cam (13), remove the nut (6), washer (7), bushing (8) and spring (9) and pull the cam from the valve body.

7-93. CLEANING, INSPECTION AND REPAIR OF PARKING BRAKE VALVE.

a. Clean the valve parts with a suitable solvent and dry them thoroughly.

b. Inspect the cam and seat surfaces of the valve body for excess wear and corrosion.

c. Inspect the cam assembly for burrs, scratches, excess wear, loose operating lever, etc.

d. Check the general condition of valves and springs.

e. Repair to the valve is largely limited to smoothing burred or scratched surfaces and replacing O-rings.

7-94. ASSEMBLY OF PARKING BRAKE VALVE. (Refer to Figure 7-29.)

a. Install O-rings (10, 11 and 12) on the valve cam (13).

b. Lubricate O-rings with fluid (MIL-H-5606), insert cam (13) into valve body (1) and secure with spring (9), bushing (8), washer (7) and self-locking nut (6).

c. Install O-ring (5) on valve (4), insert the valve in the hole of the out port, install the valve spring (3) and secure with outlet fitting (2).

7-95. INSTALLATION OF PARKING BRAKE VALVE.

a. Attach the valve to the bulkhead mounting bracket with screws.

b. Connect the fluid lines to the valve.

c. Connect the control cable to the valve lever and determine that when valve lever fits in the closed detent, the parking brake handle is .062 to .125 inch of being full in against stop.

d. Bleed the brake system. (Refer to Paragraph 7-96.)

7-96. BLEEDING PROCEDURE. If the brake line has been disconnected for any reason, it will be necessary to bleed the brake system as described below:

a. Place a suitable container at the reservoir drain to collect fluid overflow.

b. Remove the rubber bleeder fitting cap located on the bottom of the brake unit housing on the landing gear.

c. Slide a hose over the bleeder fitting, loosen the fitting one turn and pressure fill the brake system with MIL-H-5606 fluid.

NOTE

By watching the fluid flowing into the reservoir, it can be determined whether any air has entered the system. If air bubbles are evident, filling of the system shall be continued until all of the air is out of the system and a steady flow of fluid is obtained.

d. Tighten the bleeder fitting and remove the hose. Check brakes for proper pedal pressure.

e. Repeat this procedure on the other gear.

f. Drain excess fluid from the reservoir to fluid level line with a syringe.

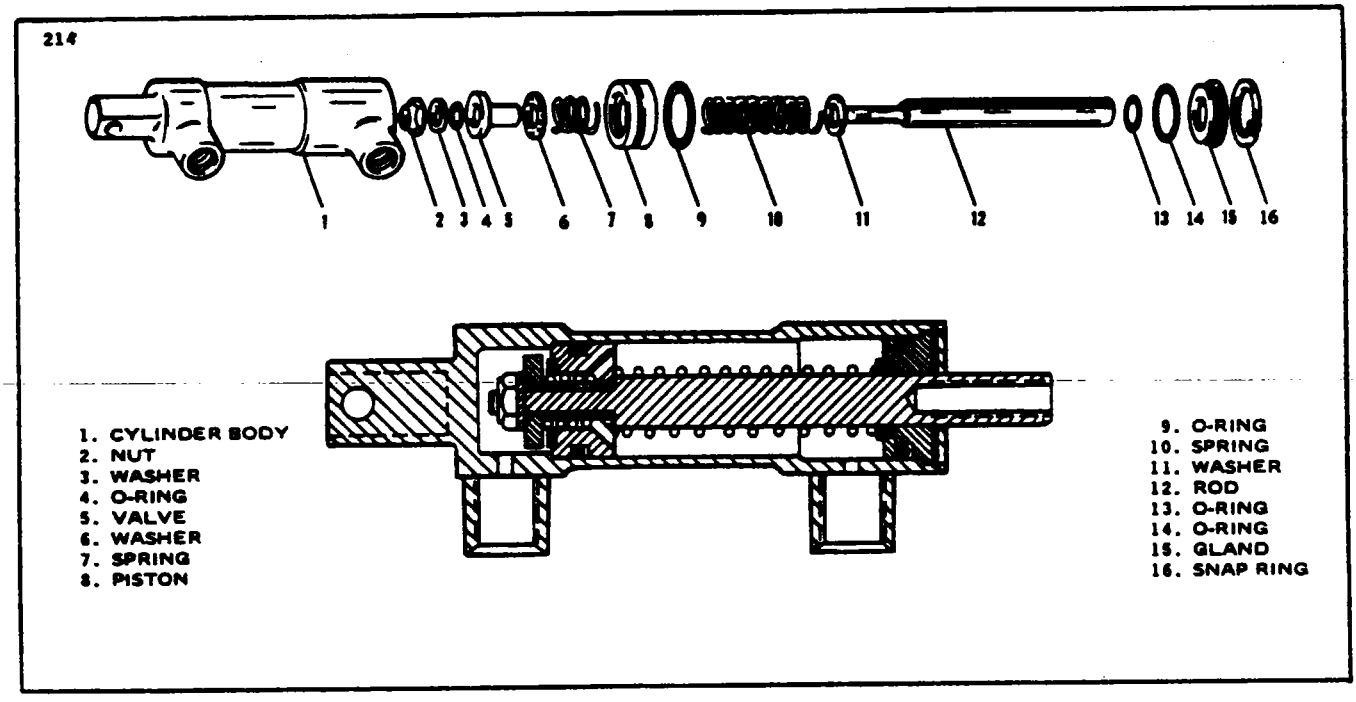

Figure 7-28. Brake Master Cylinder Assembly

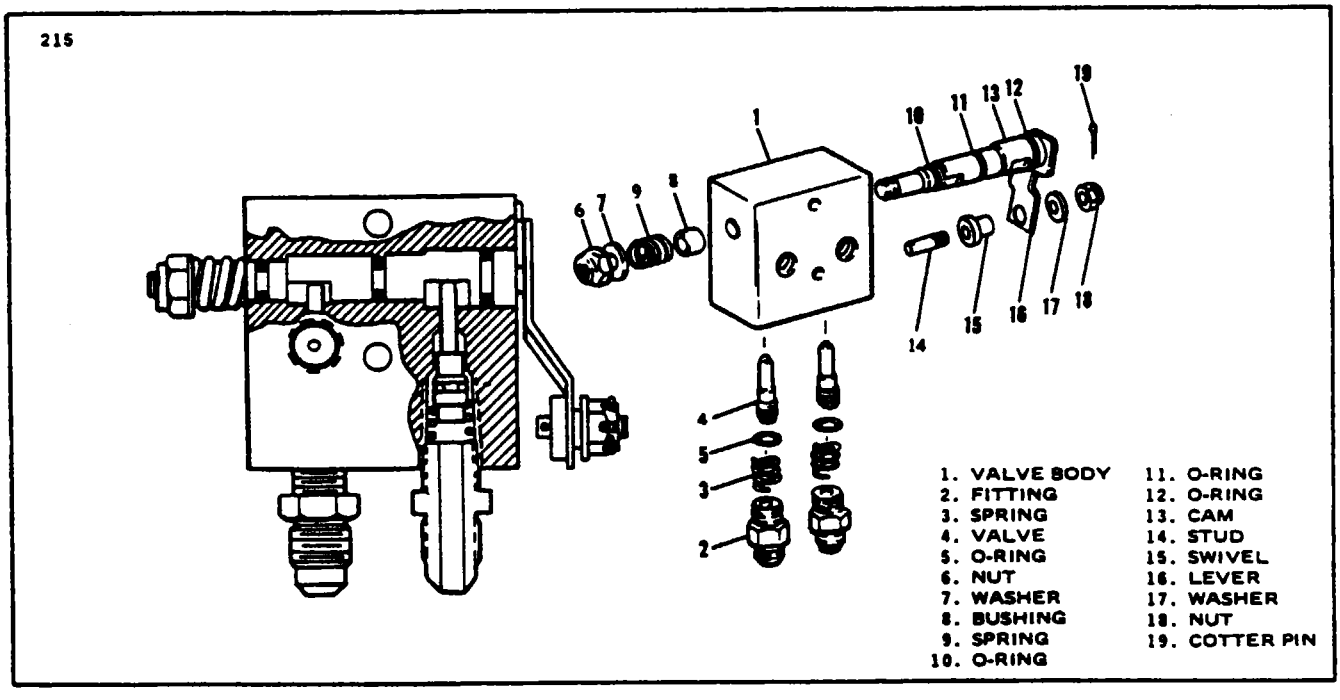

Figure 7-29. Parking Brake Valve Assembly

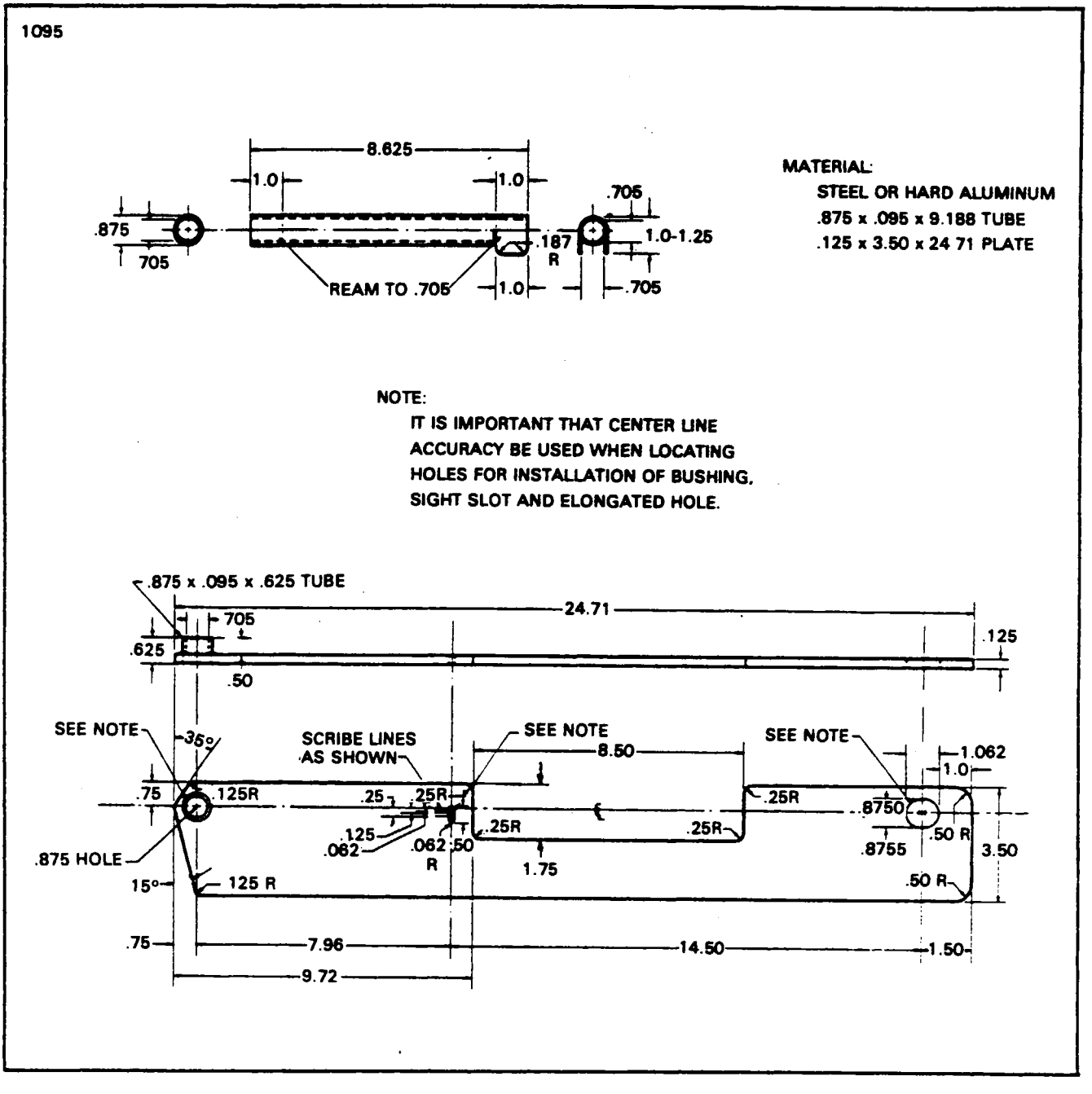

Figure 7-30. Fabricated Tool, Nose Gear Gauge Link Travel

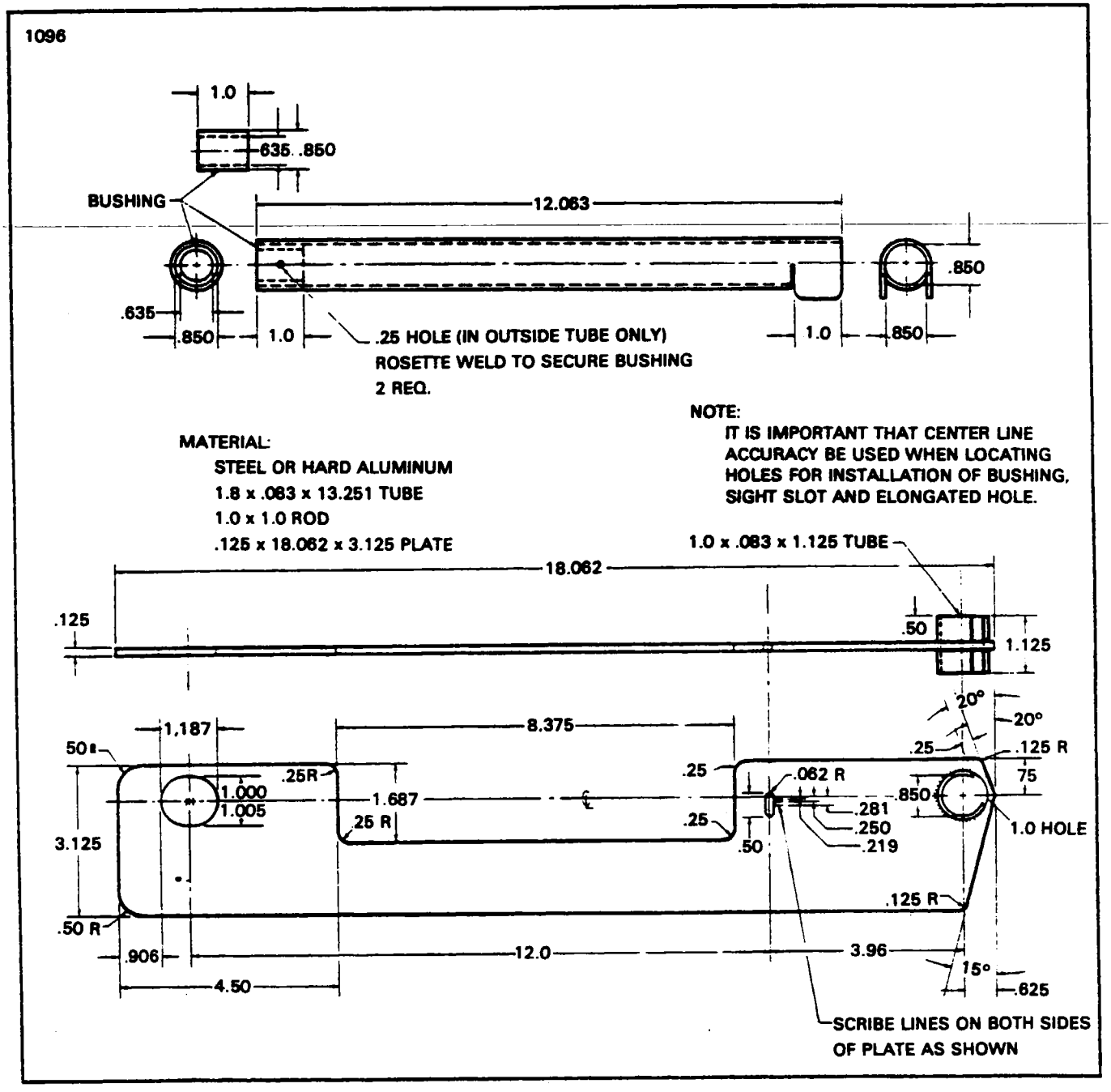

Figure 7-31. Fabricated Tool, Main Gear Side Brace Link Travel

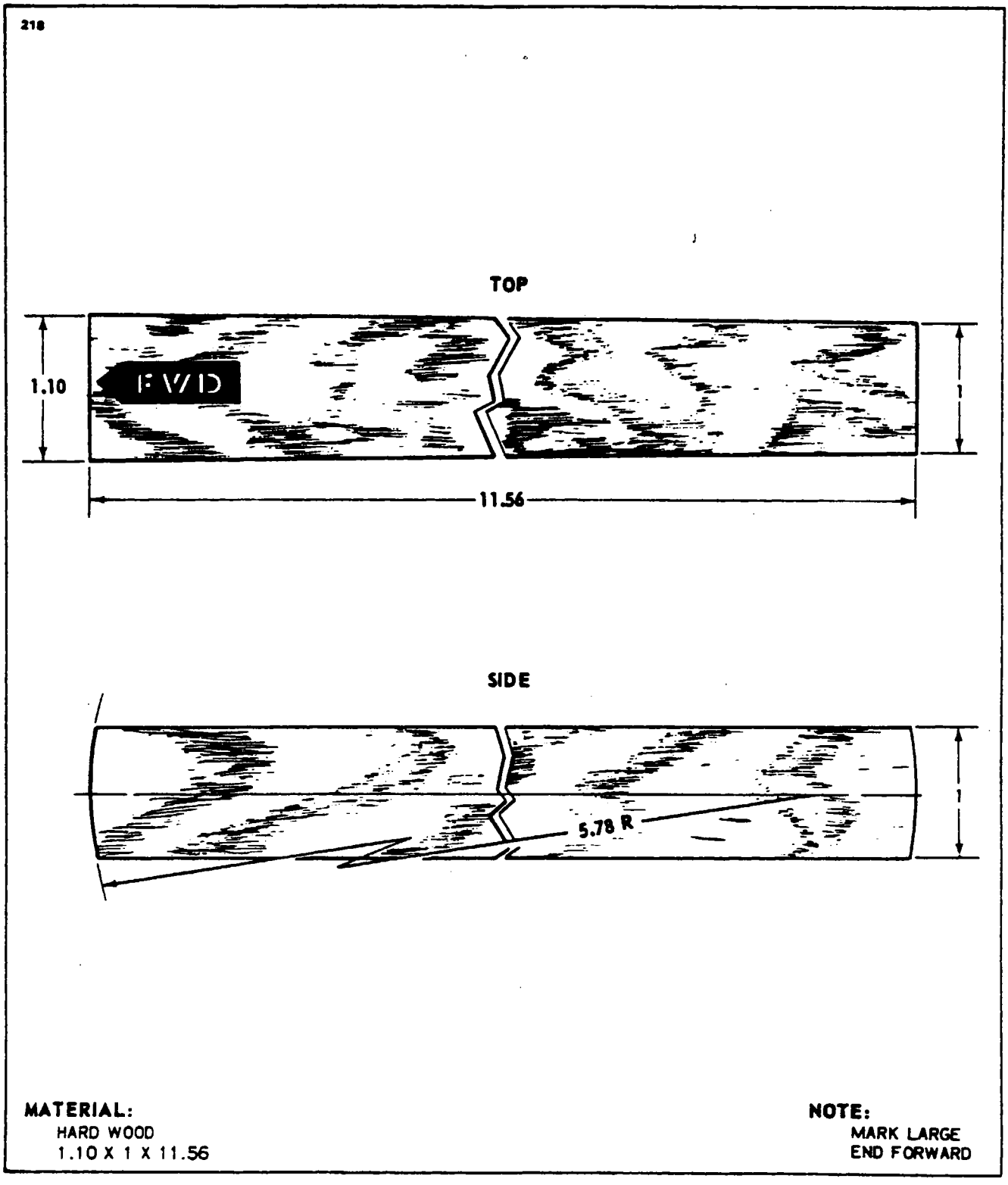

Figure 7-32. Fabricated Tool, Main Gear Toe-In Adjustment

TABLE VII-V. TROUBLESHOOTING CHART (LANDING GEAR SYSTEM)

Trouble	Cause	Remedy
Landing gear selector handle fails to operate to gear up position.	Selector lever cannot be moved to the gear up position while the LEFT main gear strut is compressed or with the power off.	Ascertain that the LEFT main gear strut is extended and that the power is on.
	Faulty safety switch on left main gear.	Adjust or replace safety switch.
Gear retracts or extends before the doors open.	Priority valve leaks in power pack.	Check priority valve cracking pressure.
	Solenoid valve stuck in closed position.	Turn off power and hand pump doors open.
	Micro switch on power pack out of adjustment.	Check for bent bracket or loose mounting or wire and adjust.
Doors come open in flight.	Doors are rigged too tight.	Adjust rigging of doors.
	Micro switch on power pack out of adjustment.	Adjust micro switch.
Doors fail to close.	Circuit breaker out.	Check circuit breaker.
	Limit switch out of adjustment.	Adjust limit switch.
	Gear not fully retracted.	Check adjustment.
	Cannon plug on power pack loose.	Tighten plug.
	Solenoid valve stuck in door open position.	Check wiring to solenoid valve.

TABLE VII-V. TROUBLESHOOTING CHART (LANDING GEAR SYSTEM) (cont.)

Trouble	Cause	Remedy
Nose gear fails to lock up when handle returns to neutral.	Not enough actuator stroke. Gear doors pinching.	Increase the actuator stroke. Relieve door pinch by lengthening door operating rods.
Main gear fail to lock up.	Uplock rod out of adjustment. Actuator out of adjustment.	Adjust rod. Adjust actuator.
No red light on panel when gear are in transit.	Circuit breaker out. Indicator light burned out. Circuit wire broken.	Check circuit breaker. Replace indicator light. Check wiring.
No green light on panel when gears are down.	Circuit breaker out. Indicator light burned out. Lock switch defective or out of adjustment. Gear not locked in down position.	Check circuit breaker. Replace indicator light. Replace and/or adjust lock switch. Adjust the gear.
Flashing red indicator light or warning horn sounding when power from one or both engines is above 150 foot pounds of torque.	Power lever switches are faulty. Power lever switches out of adjustment.	Replace switches. Adjust throttle switches
Red indicator light stays on with gear up and locked.	Doors could be open. Switch defective.	Adjust doors. Replace defective switch.

TABLE VII-V. TROUBLESHOOTING CHART (LANDING GEAR SYSTEM) (cont.)

Trouble	Cause	Remedy
Flashing red light and warning horn fail to operate when power from both engines is reduced below 150 foot pounds of torque.	Power lever switches out of adjustment.	Adjust throttle switches
	Power lever switches are defective.	Replace switch.
	Horn or light defective.	Replace defective part.
	Defective wiring.	Check wiring.
Nose gear shimmies during fast taxi, take-off and landing.	Internal wear in shimmy dampener.	Replace shimmy dampener.
	Shimmy dampener or bracket loose at mounting.	Replace necessary parts and bolts.
	Tire out of balance.	Check balance and replace tire if necessary.
	Worn or loose wheel bearings.	Replace and/or adjust wheel bearings.
	Worn torque link bolts and/or bushings.	Replace bolts and/or bushings.
Main landing gear shimmies during fast taxi, take-off and landing.	Tire out of balance.	Check balance and replace tire if necessary.
	Worn or loose wheel bearings.	Replace and/or adjust wheel bearings.
	Worn torque link bolts and/or bushings.	Replace bolts and/or bushings.
Strut bottoms on normal landing or when taxiing over rough ground.	Insufficient air and/or fluid in strut.	Service strut with air and/or fluid.
	Defective internal parts in strut.	Replace defective parts.

TABLE VII-V. TROUBLESHOOTING CHART (LANDING GEAR SYSTEM) (cont.)

Trouble	Cause	Remedy
Excessive or uneven wear on main tires.	Incorrect operating pressure.	Inflate tire to correct pressure.
Nose gear fails to steer properly.	Oleo cylinder binding in strut housing.	Lubricate strut housing.
	One brake dragging.	Determine cause and correct.
	Steering arm roller sheared at top of strut.	Replace defective roller.

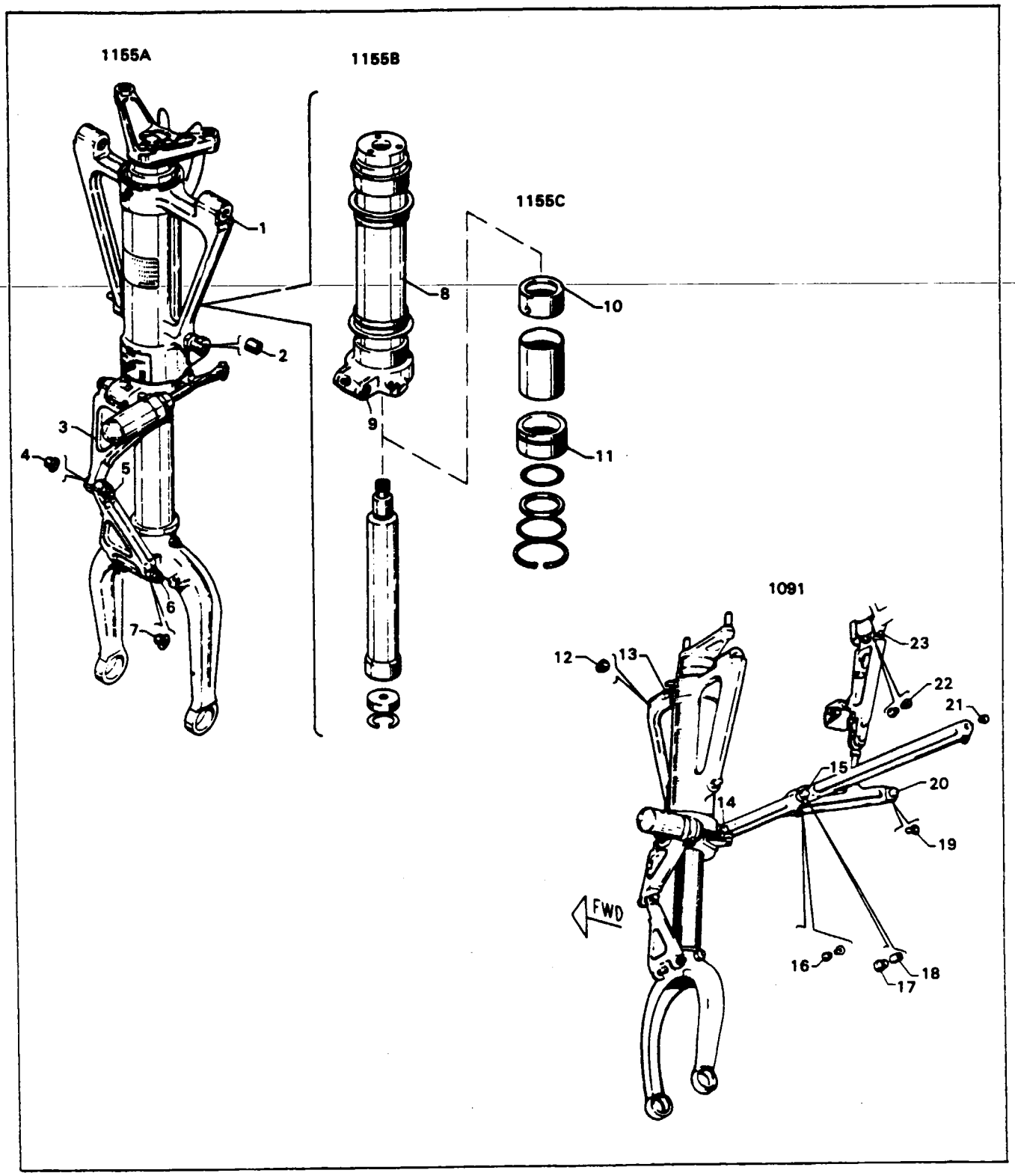

Figure 7-33. Nose Gear Wear Limits

Index No.	Part No.	Item	Mfg. Dimension	Min. Service Limit	Max. Service Limit
1	31766-2	Trunnion Bushing	.5625 +.0015 -.0000	.5625	.5650
13	AN9-30	Trunnion Bolt - AN179 may be used to reduce play.	.5620 +.0000 -.0040	.5570	.5620
12	NAS77-9-36	Trunnion Plate Bushing	.5625 +.0015 -.0000	.5625	.5645
2	NAS75-7-016	Drag Link Lug Bushing	.4375 +.0015 -.0000	.4375	.4410
14	AN177-25	Drag Link Lug Bolt	.4367 +.0000 -.0005	.4350	.4367
16	NAS77-7-38	Lower Drag Link - Applies to both ends of link.	.4375 +.0015 -.0000	.4375	.4410
15	AN177-37	Bolt - Drag Link Joint	.4367 +.0000 -.0005	.4355	.4367
18 17 21	NAS75-7-014 NAS77-7-38 NAS77-7-68	Bushing - Upper Drag Link - L & R - Both ends	.4375 +.0015 -.0000	.4375	.4410
20	AN177-21	Bolt - Drag Link - Top L & R	.4367 +.0000 -.0005	.4350	.4367
19	NAS77-7-40	Bushing - Drag Link Plate - L & R	.4375 +.0015 -.0000	.4375	.4410
22	NAS77-4-50	Bushing - Nose Gear Idler - Top	.2500 +.0015 -.0000	.2500	.2520

Figure 7-33. Nose Gear Wear Limits (cont.)

Index No.	Part No.	Item	Mfg. Dimension	Min. Service Limit	Max. Service Limit
23	AN4-33	Bolt - Nose Gear Idler - Top - AN174 may be used to reduce play.	.2490 +.0000 -.0030	.2455	.2490
4	31796	Bushing - Torque Link	.2510 +.0010 -.0000	.2510	.2530
5	AN174-13	Bolt - Torque Link Joint	.2492 +.0000 -.0005	.2475	.2492
3	31850	Link - Torque	.3120 +.0010 -.0000	.3120	.3140
6	AN175-32	Bolt - Torque Link Attachment	.3117 +.0000 -.0005	.3105	.3117
7	31785-00	Bushing - Fork - Torque Link Attachment	.3130 +.0020 -.0000	.3130	.3160
9	NAS77-5-42	Bushing - Cylinder - Torque Link Attachment	.3125 +.0015 -.0000	.3125	.3160
11	31780	Bearing - Oleo Strut - Lower	1.9375 +.0020 -.0000	1.9375	1.9405
10	31799	Bearing - Oleo Strut - Upper	2.3730 +.0000 -.0020	Chrome Plate Worn Thru	2.3730
8	40275	Cylinder Assembly (Cylinder Bore)	2.3750 +.0030 -.0000	2.3750	2.3795

Figure 7-33. Nose Gear Wear Limits (cont.)

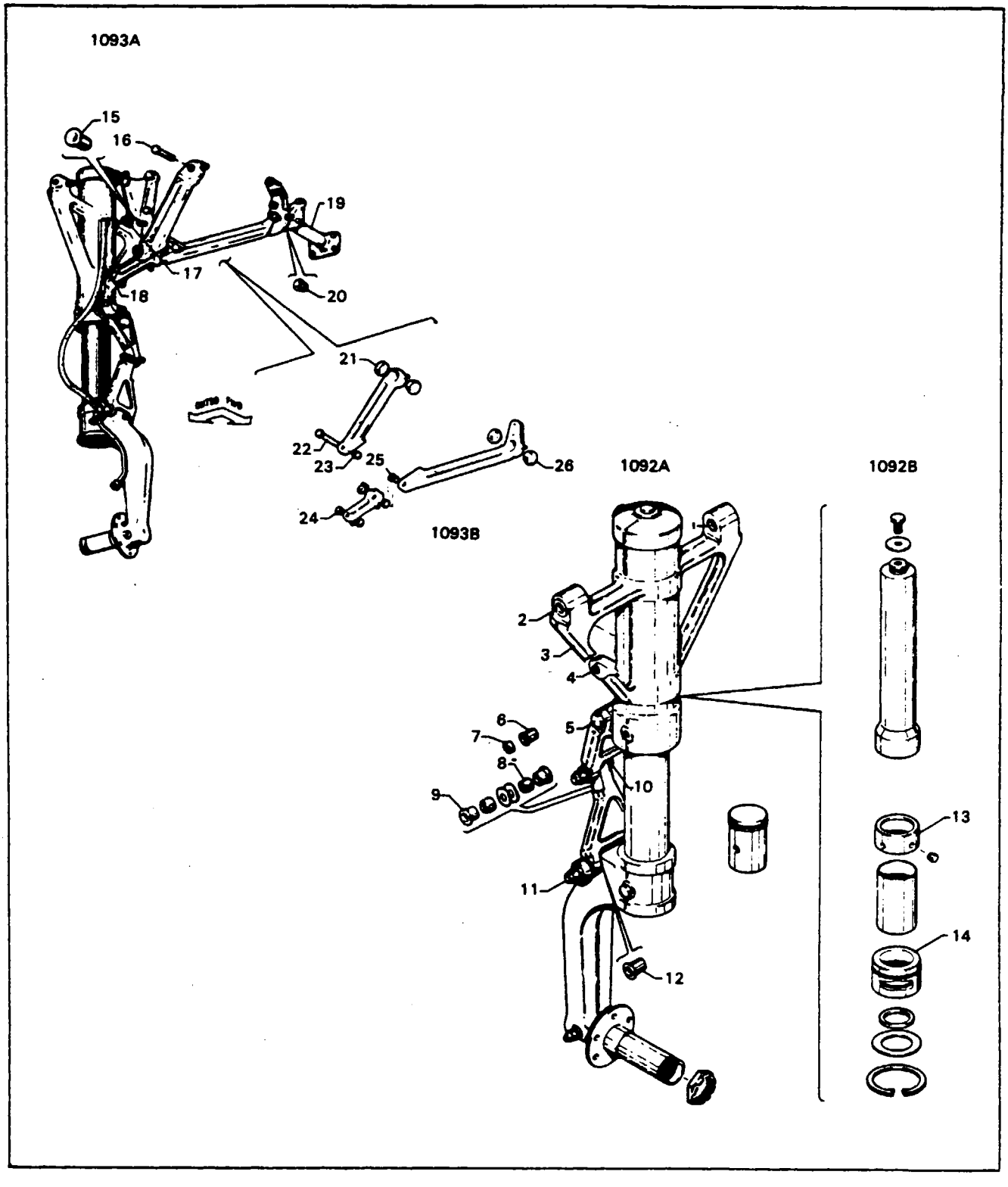

Figure 7-34. Main Gear Wear Limits

Index No.	Part No.	Item	Mfg. Dimension	Min. Service Limit	Max. Service Limit
2 1	20737-23 43256-4 61402-99 43256-5	Bushing - Trunnion	.6245 +.0015 -.0000	.6245	.6270
17	AN10-35	Bolt - Trunnion - AN180 may be used to reduce play.	.6240 +.0000 -.0040	.6190	.6240
15	NAS77-10-94	Bushing - Trunnion Plate	.6250 +.0015 -.0000	.6250	.6270
4	61402-98 43256-3	Bushing - Side Brace Lug	.4990 +.0010 -.0000	.4990	.5025
18	AN178-26	Bolt - Side Brace Lug	.4991 +.0000 -.0005	.4981	.4991
24	NAS77-8-44	Bushing - Side Brace - Lower Link - Applies to both ends of link.	.5000 +.0015 -.0000	.5000	.5020
22	AN178-33	Bolt - Side Brace Joint	.4991 +.0000 -.0005	.4981	.4991
23,25	NAS77-8-72	Bushing - L & R Side - Brace Link - Lower End	.5000 +.0015 -.0000	.5000	.5020
21	NAS77-8-38	Bushing - Aft Side Brace - Upper End	.5000 +.0015 -.0000	.5000	.5025
16	AN8-27	Bolt - Aft Side Brace - Upper End - AN178 may be used to reduce play.	.4990 +.0000 -.0040	.4940	.4990

Figure 7-34. Main Gear Wear Limits (cont.)

Index No.	Part No.	Item	Mfg. Dimension	Min. Service Limit	Max. Service Limit
20	NAS77-8-84	Bushing - Aft Side - Brace Fitting	.5000 +.0015 -.0000	.5000	.5025
26	NAS77-18-50	Bushing - Forward Side - Brace - Upper End	1.1250 +.0015 -.0000	1.1250	1.1280
19	42058-00	Shaft - Forward Side - Brace Pivot	1.1245 +.0000 -.0010	1.1225	1.1245
6	20737-40 43256-2	Bushing - Housing - Torque Link Attachment	.3740 +.0020 -.0000	.3745* *Ream at install. if req.	.3775
5	AN176-42	Bolt - Torque Link to Housing	.3742 +.0000 -.0005	.3732	.3742
7	NAS75-6-011	Bushing - Torque Link	.3750 +.0015 -.0000	.3750	.3775
8 9	NAS75-7-011 NAS77-7-35	Bushing - Torque Link - Center	.4375 +.0015 -.0000	.4375	.4400
10	AN7-22	Bolt - Torque Link - Center - AN177 may be used to reduce play.	.4370 +.0000 -.0040	.4330	.4370
12	20737-40 43256-2	Bushing - Fork - Torque Link Attachment	.3740 +.0020 -.0000	.3745* *Ream at install. if req.	.3775

Figure 7-34. Main Gear Wear Limits (cont.)

Index No.	Part No.	Item	Mfg. Dimension	Min. Service Limit	Max. Service Limit
11	AN176-51	Bolt - Torque Link to Fork	.3742 +.0000 -.0005	.3732	.3742
14	40246-00	Bearing - Oleo Strut - Bottom	2.7500 +.0020 -.0000	2.7500	2.7530
13	40247-00	Bearing - Oleo Strut - Top	3.2480 +.0000 -.0020	Chrome Plate Worn Thru	3.2480
3	40327-00	Housing Assembly (Cylinder Bore)	3.2500 +.0030 -.0000	3.2500	3.2545

Figure 7-34. Main Gear Wear Limits (cont.)

SECTION VIII
POWER PLANT
PA-31T AND 31T1

Paragraph		Aerofiche Grid No.
8-1.	Introduction	2I14
8-2.	Description	2I14
8-3.	Troubleshooting	2I15
8-4.	Engine Cowling	2I15
	8-5. Removal of Engine Cowling	2I15
	8-6. Cleaning, Inspection And Repair of Engine Cowling	2I15
	8-7. Installation of Engine Cowling	2I15
8-8.	Engine Air Inlet Ice Protection System	2I16
	8-9. Removal of Ice Deflector Door Transmission	2I16
	8-10. Cleaning, Inspection and Repair of Ice Deflector Door	2I17
	8-11. Installation of Ice Deflector Door Transmission	2I17
	8-12. Adjustment of Engine Ice Protection System (S/N 31T-7400002 to 8104073 incl.)	2I17
	8-12a. Adjustment of Air Inlet Protection System (S/N 31T-8304001 and up)	2I18
	8-13. Inlet Air Deicer Boot	2I19
8-14.	Oil Cooler Exhaust Door	2I23
	8-15. Removal of Oil Cooler Door Transmission	2I23
	8-16. Cleaning, Inspection and Repair of Oil Cooler Door Transmission	2I23
	8-17. Installation of Oil Cooler Door Transmission	2I24
	8-18. Adjustment of Oil Cooler Door	2I24
8-19.	Propeller	2I24
	8-20. Removal of Propeller	2I24
	8-21. Cleaning, Inspection and Repair of Propeller	2J1
	8-22. Installation of Propeller	2J1
	8-23. Propeller Adjustments	2J4
8-24.	Propeller Governors	2J5
	8-25. Removal of Propeller Constant Speed Governor	2J5
	8-26. Installation of Propeller Constant Speed Governor	2J5
	8-27. Constant Speed Governor Adjustments	2J5
8-28.	Propeller Overspeed Governor	2J6
	8-29. Removal of Propeller Overspeed Governor	2J6
	8-30. Installation of Overspeed Governor	2J6
	8-31. Overspeed Governor Operational Checks	2J6
8-32.	Engine	2J7
	8-33. Engine Removal	2J7
	8-34. Engine Buildup	2J8
	8-35. Engine Installation	2J11

Paragraph		Aerofiche Grid No.
8-36.	Engine Controls	2J11
8-37.	Condition Lever	2J11
8-38.	Rigging Condition Lever	2J12
8-39.	Ignition Cutoff Switch	2J12
8-40.	Adjustment of Ignition Cutoff Switch	2J12
8-41.	Propeller Pitch Control Lever	2J12
8-42.	Rigging Propeller Pitch Control Lever	2J12
8-43.	Power Lever	2J12
8-44.	Rigging the Power Lever	2J12
8-45.	Rigging the Fuel Control Unit to the Fuel Control Actuating Lever	2J14
8-46.	Rigging Throttle Control Cable to the Power Lever Arm	2J19
8-47.	Beta Valve Rigging Procedure	2J19
8-48.	Low Pitch Stop Switch Adjustment	2J19
8-49.	Rigging of Propeller Governor Interconnecting Rod to Propeller Push-Pull Cable	2J20
8-50.	Rigging the Push-Pull Cable to Cam Box	2J20
8-51.	Propeller Reverse Switch Adjustment	2J20
8-52.	Reverse Not Ready Switch Adjustment	2J20
8-53	Throttle Control Cable Handling and Storage (Power Lever)	2J21
8-54.	Throttle Control Cable Removal and Installation (Power Lever)	2J21
8-55.	Pre-Run Rigging and Adjustment of Power Control (Airframe to Engine Interconnect)	2J22
8-56.	Engine Depreservation	2J22
8-57.	Engine Motoring Run	2J23
8-58.	Engine Ground Check and Safety Precautions	2J23
8-59.	Engine Idle and Power Adjustments	2J24
8-60.	Engine Ground Testing	2K8
8-61.	Part Power Trim Check (PA-31T)	2K8
8-62.	Engine Performance and Data Plate Speed Check (PA-31T)	2K9
8-63.	Engine Overtemperature and Overtorque Limits	2K10
8-63a.	Engine Ground Performance Check (PA-31T1)	2K10
8-64.	Engine Shock Mounts	2K21
8-64a.	Inspection of Mount Assemblies	2K21
8-64b	Cleaning Mount Assemblies	2K21
8-65.	Replacement of Shock Mounts	2K21
8-66.	Engine Fire Seals	2K21
8-67.	General	2K21
8-68.	Engine Fuel System	2K22
8-69.	General	2K22
8-70.	Fuel Control Unit	2K22
8-71.	Removal of Fuel Control Unit	2K22
8-72.	Preparation for Shipping	2K22
8-73.	Preparation for Service	2K22
8-74.	Installation of Fuel Control Unit	2K23
8-75.	Fuel Control Unit Checks and Adjustments	2K23
8-76.	Fuel Control Pneumatic (P3) Filter Maintenance	2K23
8-77.	Fuel Manifold Adapter Removal and Installation	2K23
8-77a.	Fuel Nozzle Adapter Inspection	2K23
8-78.	Functional Check of Fuel Manifold Assemblies	2K24
8-79.	Fuel Scavenger System	2L1

Paragraph		Aerofiche Grid No.

8-80.	Ignition System	2L3
8-81.	General	2L3
8-82.	Checking Ignition System	2L3
8-83.	Ignition Cutoff Switch Removal and Installation	2L4
8-84.	Ignition Cutoff Switch Adjustment	2L4
8-85.	Igniter Plug Cleaning and Inspection	2L5
8-86.	Lubrication System	2L5
8-87.	General	2L5
8-88.	Oil Cooler	2L5
8-89.	Removal of Oil Cooler	2L5
8-90.	Installation of Oil Cooler	2L6
8-91.	Oil Filter Element Removal and Installation	2L6
8-92.	Cleaning Procedures for Cleanable Filter Elements	2L7
8-93.	Bleed Air System	2L7
8-94.	General	2L7
8-95.	Engine Indicating System	2L7
8-96.	Torque Pressure Indicating System	2L7
8-97.	General	2L7
8-99.	Calibration	2L8
8-99a.	Cheyenne IA Torque Indicating Check	2L10
8-99.	Inter-Turbine Temperature Sensing System (ITT)	2L14
8-100.	General	2L14
8-101.	Resistance Check of Inter-Turbine Temperature System	2L14
8-102.	Inter-Turbine Temperature Calibration Check	2L14
8-103.	Tachometer-Generators (Propeller and Gas Generator)	2L14
8-104.	General	2L14
8-105.	Removal and Installation	2L16
8-106.	Engine Condition Trend Monitoring System	2L17
8-107.	Engine Wiring Harness 500 Hour Inspection	2L17

SECTION VIII
POWER PLANT
PA-31T AND PA-31T1

8-1. INTRODUCTION. The purpose of this section is to provide service instructions for the power plant installation and its related components. The maintenance concept of this section is supplemental to Pratt and Whitney's Engine Maintenance Manual (refer to Table VIII-II for appropriate manual) and consists of removal, installation, and adjustments of external components and engine accessories. Repairs beyond this level should be accomplished by an approved Pratt and Whitney Aircraft of Canada Ltd. overhaul facility. The instructions are organized so the mechanic can refer to: Description, for a basic understanding of the power plant and its various components: Troubleshooting, for a methodical approach in locating the difficulty; and Removal, Installation, and Adjustment instructions to aid the mechanic when servicing the aircraft power plants.

In the interest of maintaining the efficient engine performance, an Engine Condition Trend Monitoring System has been set up by Pratt and Whitney Aircraft of Canada Ltd. This is not a mandatory procedure, but is highly recommended by Pratt and Whitney Aircraft of Canada Ltd. and Piper Aircraft Corporation. The use of this procedure will establish a means by which the engine condition can be observed without actual teardown of components, until conditions warrant it. Copies of the procedure can be obtained from Pratt and Whitney Aircraft of Canada Ltd.; Refer to the latest revision of Aircraft Gas Turbine Operation Information Letter #18.

8-2. DESCRIPTION. The Piper Cheyenne is powered by two lightweight, free turbine Pratt and Whitney PT6A turboprop engines, for leading particulars refer to Section II.

The engines are completely enclosed by cowlings consisting of an upper and lower section of cantilever construction attached at the firewall. A hinged door on the upper cowls allows access to the oil filler neck and quantity dipstick. The air inlet ice deflector door is an integral part of the lower cowl assembly.

A compressor wash ring is offered as optional equipment. When installed, routine compressor washes may be performed, without the removal of the cowling, through an access door located on the outboard side of the nacelle.

The propeller installations are constant speed, full feathering, reversing type, controlled by engine oil pressure through single-acting propeller governors. Centrifugal counterweights assisted by a feathering spring move the blades toward the low rpm (high pitch) position and into the feather position. This movement is opposed by oil pressure controlled by the propeller governor. Oil pressure moves the propeller to the high rpm (low pitch) hydraulic stop and reverse position. The propellers have no high pitch stop; this allows the propeller to feather after engine shutdown.

The engine lubricating system is a pressure type with the main oil pump located in the oil tank. The oil tank is an integral part of the compressor inlet case.

The fuel control system consists of a single engine driven pump, a fuel control unit, with fuel shutoff, and a dual fuel manifold with seven nozzles per manifold. An automatic fuel dump valve and two combustion chamber drain valves are provided to insure drainage of residual fuel after engine shutdown. A scavenger pump system collects residual fuel after engine shutdown and injects the fuel back into the aircraft fuel tank during engine start.

The ignition system consists of one exciter box, two ignition leads, and two spark igniters for each engine which require about 8000-volts to spark. Ignition is by both igniters simultaneously; there is no provision for single igniter operation.

The engine is also equipped with a 28-volt, 200 amp starter-generator, hydraulic pump, power section tachometer generator, gas generator tachometer generator, and an air bleed system which provides high pressure air for cabin pressurization. The complete engine assembly is supported on a tubular steel mount attached at the fire wall.

8-3. TROUBLESHOOTING. Troubles concerning the power plant are listed in Table VIII-V in the back of this section along with their probable causes and suggested remedies. Before attempting to locate the difficulty, consult all available sources for any pertinent information which might assist in diagnosing the trouble.

NOTE

For additional information regarding troubleshooting of the engine, refer to Table VIII-II for appropriate Pratt and Whitney Engine Maintenance Manual.

NOTE

Special tools referred to in the following service information are available through the Piper Service Department, or may be fabricated locally from information supplied with the text.

8-4. ENGINE COWLING.

8-5. REMOVAL OF ENGINE COWLING. (Refer to Figure 8-1.) The procedure for removing the engine cowling is the same for either engine.

a. Disconnect the strip assemblies (6) and (8) and the louver assembly (9) that connect the upper and lower cowl halves.

b. Remove the fasteners connecting the starter-generator cooling duct (13) to the upper cowl.

c. Disconnect the fasteners securing the upper cowl to the nacelle and remove the upper cowling.

d. To remove the lower cowl, remove the access plate (12) and disconnect the rod (2) from the ice deflector door (S/N 31T-7400002 thru 8104073 incl.). Disconnect the wire leads from the limit switches (3) and the deicer boot (5).

e. Remove the fasteners connecting the intercooler air inlet duct to the lower cowl.

CAUTION

To insure against possible damage to the lower cowl and deicer boot leads, support the lower cowl before proceeding with Step f below.

f. Disconnect the fasteners securing the lower cowl to the nacelle and remove the cowl from the aircraft.

8-6. CLEANING, INSPECTION AND REPAIR OF ENGINE COWLING.

a. Clean the cowling with a suitable solvent and wipe with a clean cloth.

b. Inspect the cowling for dents, cracks, loose rivets, damaged or missing fasteners.

c. Repair all defects to prevent further damage. Fiberglass repair may be accomplished by using procedures listed in Fiberglass Repairs, Section IV.

8-7. INSTALLATION OF ENGINE COWLING. (Refer to Figure 8-1.) The procedure for installing the cowl is the same for either engine.

a. Position and support the lower cowl in place and secure the cowl to the nacelle with fasteners along the aft section of the cowl.

b. Connect the rod (2) to the ice deflector door and install the access plate (12) (S/N 31T-7400002 thru 8103073 incl.).

c. Connect the electrical leads to the respective leads on the limit switches (3) and deicer boot (5). Reconnect the intercooler air inlet duct.

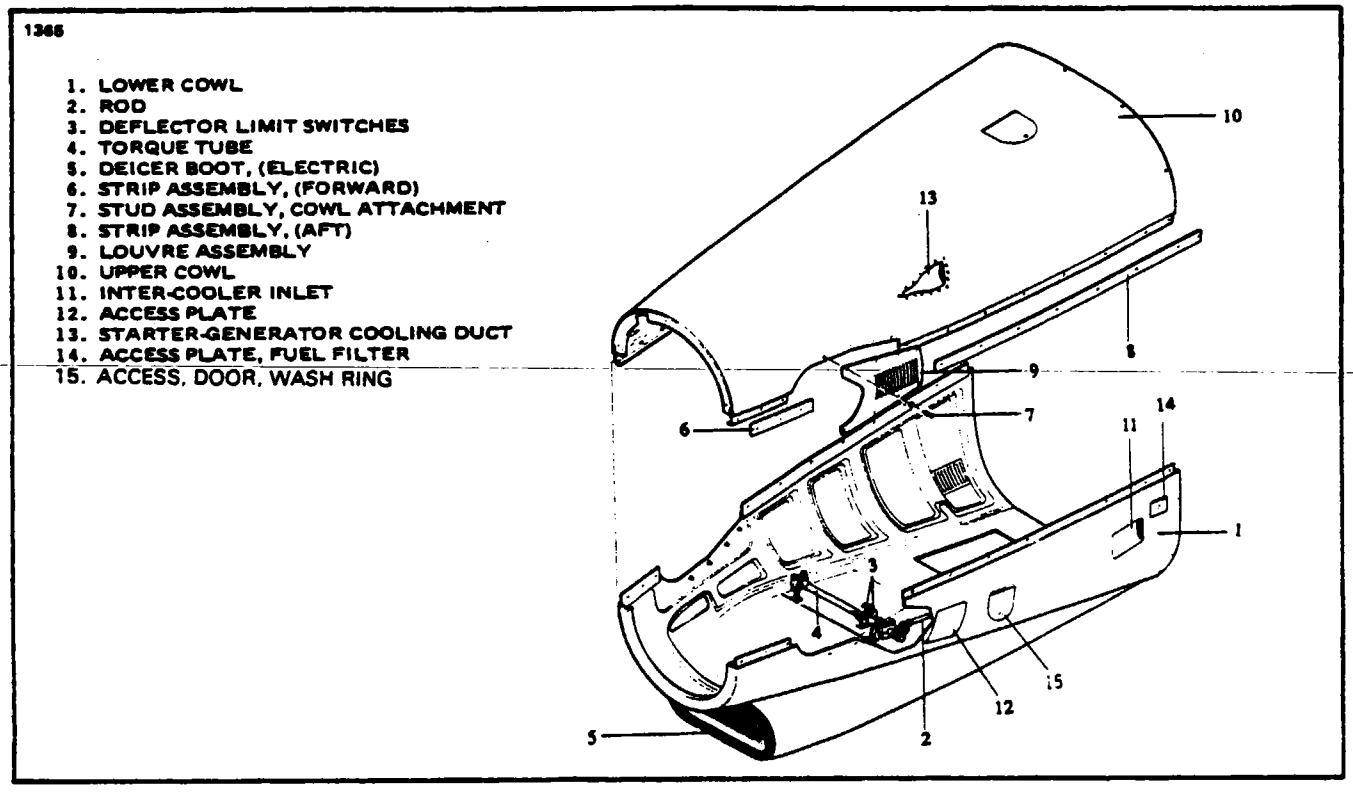

Figure 8-1. Engine Cowling

d. Position the upper cowl half in place and connect the starter-generator cooling duct (13) to the upper cowl. Connect the fasteners along the aft section of the cowl.

e. Secure the strip assemblies (6) and (8) and louver assembly (9).

f. Check the cowling and attachment hardware for security.

8-8. ENGINE AIR INLET ICE PROTECTION SYSTEM.

8-9. REMOVAL OF ICE DEFLECTOR DOOR TRANSMISSION. (Refer to Figure 8-2.) To remove the transmission from the aircraft, the following procedure may be used:

NOTE

To facilitate removal, ascertain that the ice door and transmission are in the closed position.

a. Remove the engine cowling per Paragraph 8-5.

b. Disconnect the electrical leads from the transmission assembly.

c. Disconnect the transmission clevis end from the torque tube assembly.

d. Disconnect the transmission from the fire wall mounting bracket and remove the complete assembly from the engine compartment.

8-10. CLEANING, INSPECTION AND REPAIR OF ICE DEFLECTOR DOOR. (Refer to Transmission, Figure 8-2.)

a. Remove the engine cowling per Paragraph 8-5.

b. Clean transmission assembly with a suitable solvent.

c. Inspect the transmission screw shaft (24) for back lash by the following procedure:

1. Disconnect transmission from Ice Deflector Door torque tube lever (10).

2. Clamp pliers (vise grips) using light pressure on the transmission screw shaft (24). (Refer to Figure 8-2.)

3. Move the pliers to rotate the screw shaft. A slight movement should be felt, but not to exceed .312 (5/16) of an inch on a 6 inch radius from the shaft.

d. Check transmission sleeve (13), screw shaft (24), and rod end (26) for distortion.

e. Check brake solenoid assembly (27) for any excessive wear, broken parts, and sticking or burned out solenoid.

f. After the transmission screw shaft and sleeve have been cleaned and dried, a coating of Aircraft Actuator Grease, MIL-G-23827 Specification, should be applied to the transmission screw shaft.

g. When the transmission assembly is disassembled for any reason, it should be repacked, 75 percent full with Dukes grease (P/N 2196-74-1).

8-11. INSTALLATION OF ICE DEFLECTOR DOOR TRANSMISSION. (Refer to Figure 8-2.)

NOTE

To facilitate installation, ascertain that the ice door and transmission are in the closed position.

a. Position the transmission assembly on the fire wall mounting bracket and secure with the proper attachment hardware. Allow the transmission to rotate on its mounting bolt.

b. Attach the transmission clevis to the torque tube with the proper clevis pin, washers and cotter pin.

c. Connect the electrical leads to the transmission assembly.

d. Check the adjustment per Paragraph 8-12.

8-12. ADJUSTMENT OF ENGINE ICE PROTECTION SYSTEM. (S/N 31T-7400002 to 8104073 incl.)

a. Remove the vane interconnect rod.

b. Make a template of aluminum or suitable material to insure the No. 1 vane is held at 24 degrees ± 1 degree.

c. Adjust forward micro switch contact screw to trigger the switch at the 24 degree vane position.

d. Adjust the rear micro switch contact screw to trigger the switch at the vane up position (flush with the upper surface of inlet duct).

e. Run the extension motor to full vane down position. While holding the vane at the point where the micro switch just makes contact (down position), adjust the interconnect rod to allow the pin to just slip into position.

f. Retract the vane.

g. Remove the pin and increase the length of interconnect rod by extending each rod end three full turns.

h. Reconnect the pin.

i. Test run the system and recheck the vane up and vane down positions.

j. With vane down, turn the vane up limit switch contact screw in one full turn.

8-12a. ADJUSTMENT OF AIR INLET ICE PROTECTION SYSTEM. (S/N 31T-8304001 and up.)PPS00001

a. To insure that the ice protection system actuator is correctly rigged, perform the following steps:

1. Fabricate a "Length Rigging Gauge" per information given in Figure 8-2b, and a "Test Harness and Connector" per Figure 8-2b.

2. With the lower cowl removed from the airplane, remove the actuator assembly from the lower cowl and set it aside for adjustment.

3. Manually position the inertial doors in the non-icing or flight position (Front door up, Rear door down).

4. Utilizing the fabricated rigging tool, ascertain the distance between the holes of the actuator horns by inserting the pins through the rigging tool and into the horns. Adjust the tool to fit without moving either horn. Tighten the tool wing nuts to retain this position and remove the tool from the cowl assembly.

5. With the actuator assembly on the work bench and the fabricated test switch assembly connected, electrically activate the actuator to its full length, allowing the limit switch to stop the movement.

6. Adjust the overall length of the actuator to match the rigging tool length by adjusting the clevis bolt length on the end of the actuator. Do not adjust the limit switch unless it is absolutely necessary.

NOTE

If the limit switch must be adjusted, take care not to exceed the stop pin on the actuator assembly. Resafety wire the jam nut on the clevis bolt after rigging.

7. Electrically operate the actuator to its fully retracted position. Allow the limit switch to stop the travel.

NOTE

Do not allow the ball nut assembly to rotate on the threaded shaft.

8. Manually position the inertial separator doors to the icing position (Front door down, Rear door up); insure that the front door trailing edge is flush with the fixed turning valve - see Figure 8-2a for this position.

9. Establish the distance between the actuator horn holes with the rigging tool as done previously in Step 4. Lock the tool length and remove from the cowl.

10. After removing the rigging tool, further shorten the overall length of the tool by an additional .125 of an inch.

11. Adjust the actuator length to match the rigging tool by adjusting the rear limit switch.

NOTE

Do not adjust the length of the clevis bolt at this time. It may be necessary to lengthen the slot in which the limit switch is mounted to accomplish this adjustment. If this is necessary, remove the switch mounting hardware and file out the slot to the required length.

12. Reinstall the actuator assembly into the lower cowling and connect the assembly to the actuator horns. Activate the system to the open and closed positions to assure its proper operation.
13. In the non-icing position ascertain that both doors stop electrically before the mechanical stop is contacted. Also insure that the rear door has no less than .064 of an inch gap between its trailing edge and the lower surface of the tunnel.
14. In the icing position ascertain that the forward door does not extend below the fixed turning vane. and the rear door has no less than .064 of an inch gap between its trailing edge and the upper stop angle. (See Figure 8-2a.)

NOTE

Airplanes equipped with Kit Assembly 765-156 should follow steps 15-18 for rigging of tube assembly.

15. In the full closed icing position, locate the forward vane restraint tube assembly with the clevis towards the aft end of the cowl and the assembly on the side opposite the actuator.
16. Move the clevis pin, through the slot, to one of the three adjustment holes provided and adjust the clevis end as required to align the rod assembly attach holes with the holes in the forward and aft arm assemblies. The torque tube must be fully compressed.
17. Turn the clevis out one-half to one turn and then lock it.
18. Install the tube assembly using appropriate hardware and activate the system through several cycles to insure no binding.

CAUTION

Throughout the rigging procedure and installation of the actuator, DO NOT allow the ball nut to rotate on the threaded shaft.

8-13. INLET AIR DEICER BOOT. Refer to Section XIV for information regarding the air inlet deicer boot.

THIS SPACE INTENTIONALLY BLANK

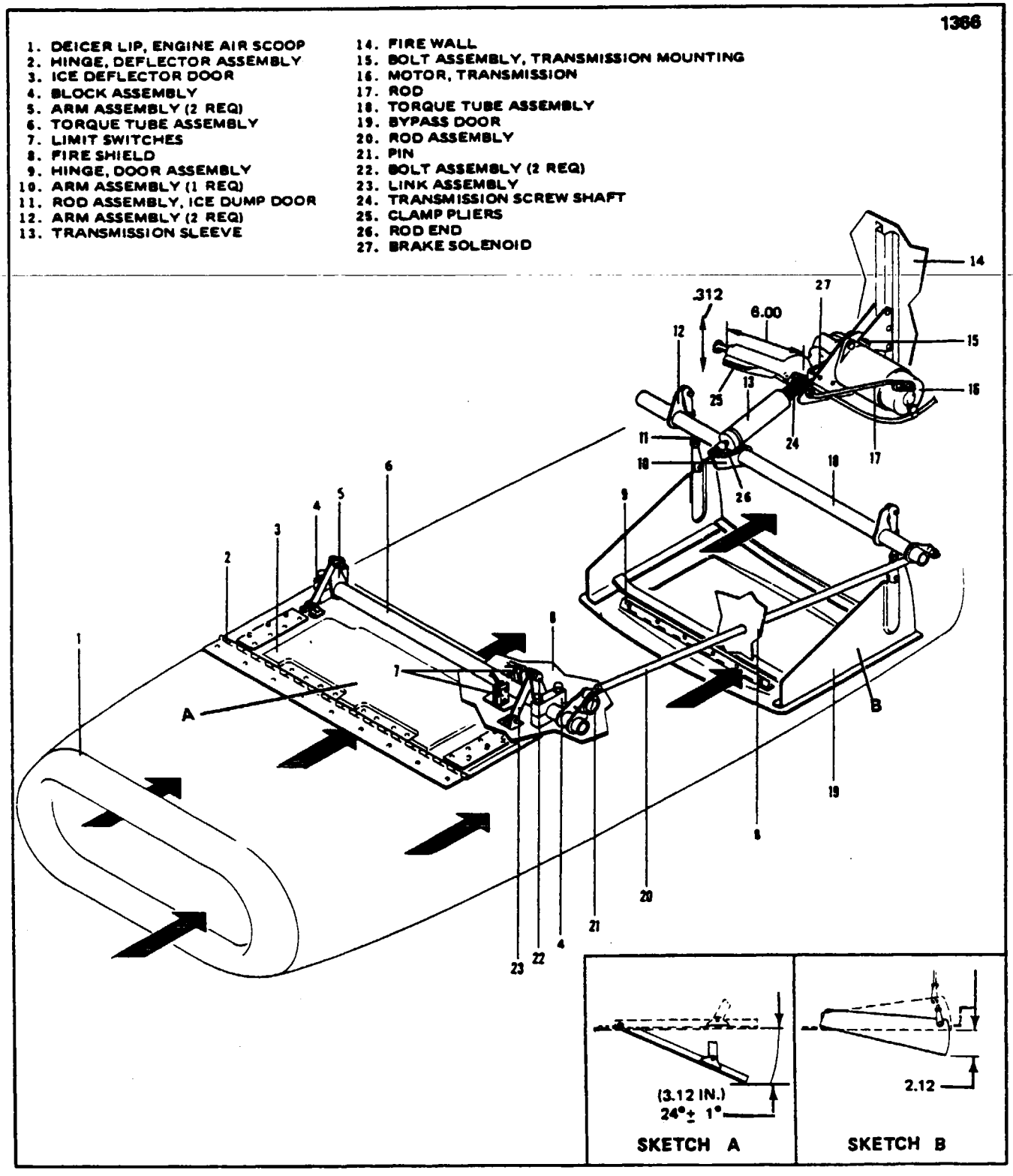

Figure 8-2. Engine Air Inlet Ice Protection System (S. N 31T-7400002 to 8104073 incl.)

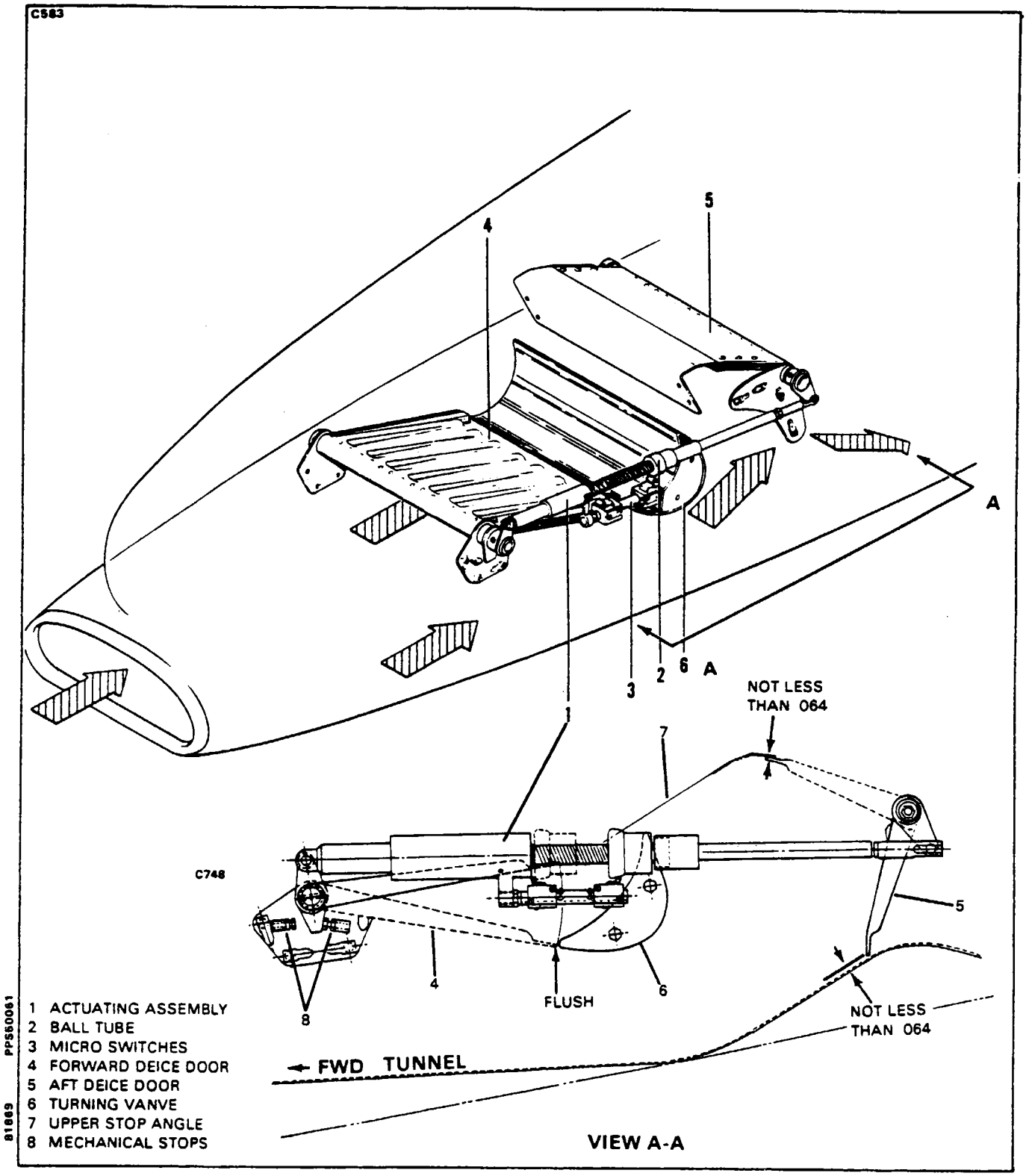

Figure 8-2a. Air Inlet Ice Protection System (S/N 31T-8304001 and up)

Added: 4/25/83

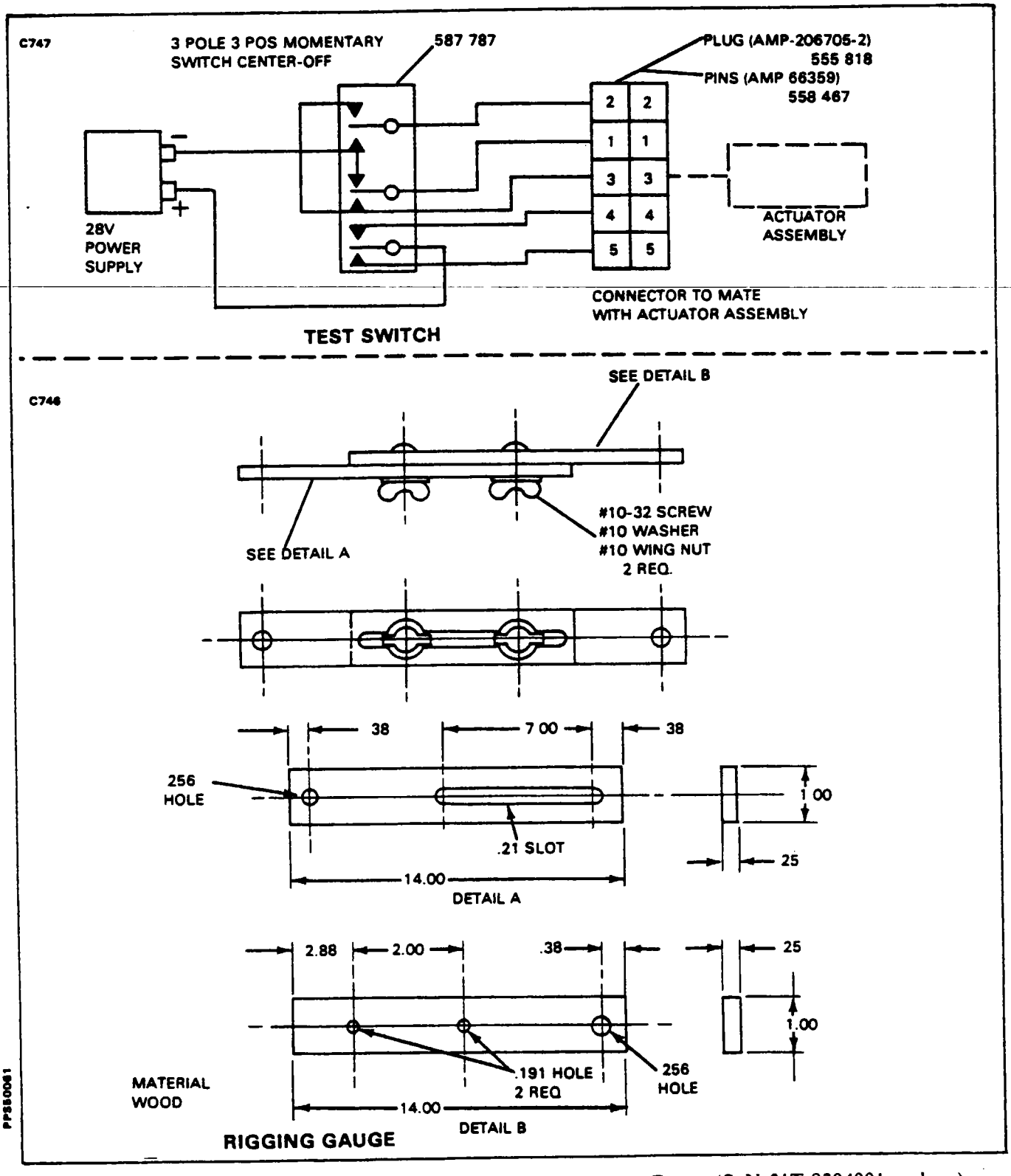

Figure 8-2b. Special Equipment for Rigging Inertial Separator Doors (S/N 31T-8304001 and up)

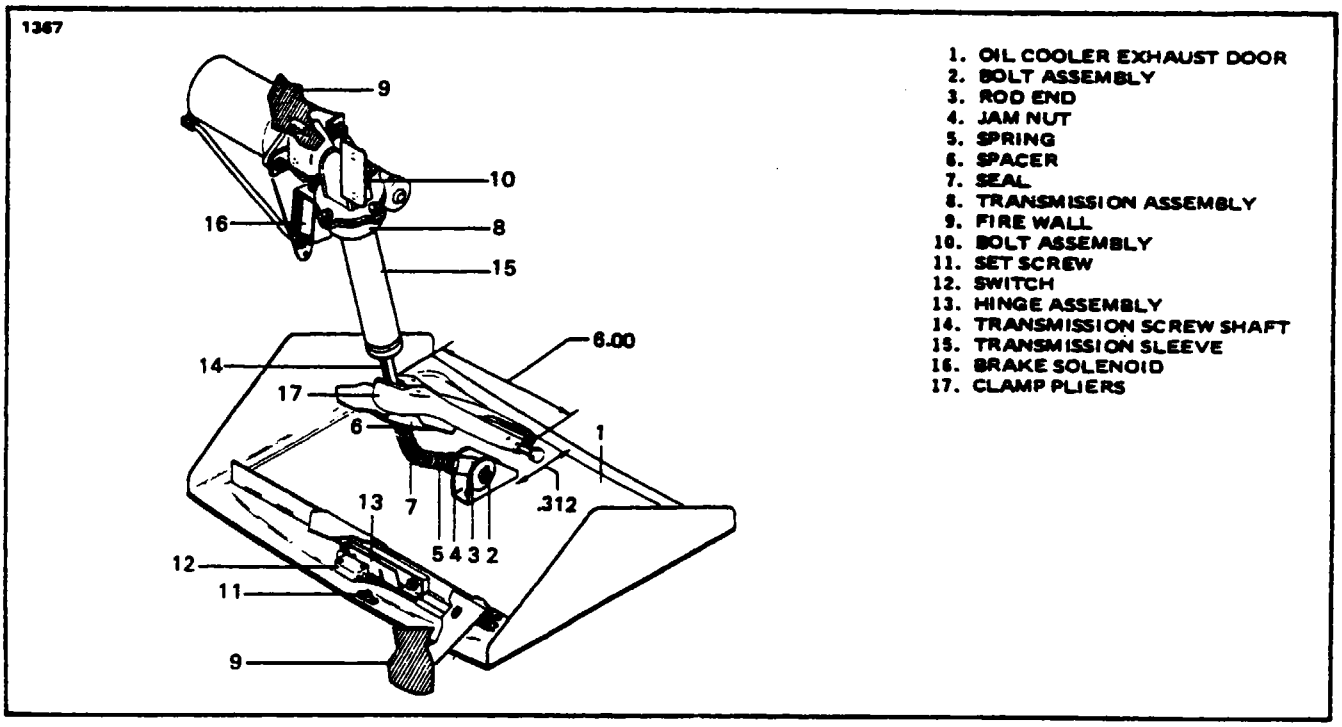

Figure 8-3. Oil Cooler Door Installation

8-14. OIL COOLER EXHAUST DOOR.

8-15. REMOVAL OF OIL COOLER DOOR TRANSMISSION. (Refer to Figure 8-3.)

a. Remove the access panels on the nacelle to gain access to the transmission assembly.
b. Extend the oil cooler door to its full open position.
c. Disconnect the electrical leads from the transmission and motor assembly.

NOTE

In some manner identify the leads to facilitate installation.

d. Disconnect the transmission rod from the oil cooler door and remove the sleeve, jam nut, spring, spacer, and seal from the transmission rod.

e. Disconnect the transmission from the fire wall mounting bracket and remove the complete assembly from the aircraft.

8-16. CLEANING, INSPECTION AND REPAIR OF OIL COOLER DOOR TRANSMISSION.

a. Remove access panel on top of engine nacelle.
b. Position oil cooler door in the open position by activating the switch in the over head panel.
c. Clean the transmission assembly with a suitable solvent.
d. Inspect the transmission screw shaft (14) for back lash by the following proceedure:
   1. Disconnect transmission from Oil Cooler Door.
   2. Clamp a pliers (vise grips) using a light pressure on the transmission screw shaft (14) Refer to Figure 8-3.
   3. Rotate the screw shaft by moving the pliers. A slight movement should be felt, but not to exceed .312 (5/16) of an inch on a 6 inch radius from the shaft.

e. Check transmission sleeve (15), screw shaft (14), and rod end (3) for distortion.

f. Check brake solenoid assembly (16) for any excessive wear, broken parts, and sticking or burned out solenoid.

g. After the transmission screw shaft and sleeve have been cleaned and dried, a coating of Aircraft Actuator Grease (MIL-G-23827) should be applied to the transmission screw shaft.

h. When the transmission assembly is disassembled for any reason, it should be repacked 75 percent full with Dukes grease (P/N 219674-1).

8-17. INSTALLATION OF OIL COOLER DOOR TRANSMISSION. (Refer to Figure 8-3.)

a. Position the transmission assembly in the mounting bracket with the rod protruding through the oil cooler duct and secure with the proper attachment hardware. Allow the transmission to rotate on its mounting bracket.

b. Connect the electrical leads to the transmission assembly.

c. Place the seal, spacer, and spring on the transmission rod. Screw the jam nut and sleeve on the rod.

d. Connect the transmission rod to the oil cooler door with the attachment hardware.

e. Adjust the oil cooler door per Paragraph 8-18.

8-18. ADJUSTMENT OF THE OIL COOLER DOOR. (Refer to Figure 8-3.)

a. Adjust the sleeve on the transmission rod so the oil cooler door is flush with the bottom of the nacelle in the fully closed position.

b. Adjust the set screw on the oil cooler door to activate the limit switch just before the door is fully open.

c. Check all attachment hardware for proper installation and security.

d. Check the operation of the oil cooler doors and indicator lights through a complete opening and closing cycle.

8-19. PROPELLER.

8-20. REMOVAL OF PROPELLER. (Refer to Figure 8-4.)

a. Remove the spinner by removing the attachment screws that secure the spinner to the spinner bulkhead.

b. Remove the engine cowling. (Refer to Paragraph 8-5.)

c. Remove the deicer brush block assembly. Use caution to avoid damaging the brushes.

d. Disconnect and remove the propeller reversing lever and carbon block from the feedback ring.

e. Install the feedback ring puller P/N 51519 and pull the feedback ring fully forward. Use a standard 5/8 inch socket against the propeller hub. (Refer to Figure 8-9.)

CAUTION

Take the necessary precautions to avoid damaging the low stop rods and the feedback ring.

f. Remove the safety wire from the propeller mounting bolts and remove the bolts using the suggested wrench (P/N 51514-00)

g. Place a drip pan under the propeller to catch oil spillage.

h. Remove the propeller from the engine flange. Remove the O-ring and cap the flange to prevent contamination.

8-21. CLEANING, INSPECTION AND REPAIR OF PROPELLER.

NOTE

Refer to the latest revision of Hartzell Propeller Service letter No. 61 for Recommended Overhaul Periods under various conditions, and Hartzell Service Instructions No. 106 for approved repairs.

a. Check for oil and grease leaks.
b. Clean the spinner, propeller hub exterior, and blades with a non-corrosive solvent.
c. Inspect the hub parts for cracks.
d. Check all visible parts for wear and safety.
e. Inspect blades for damage or cracks. Nicks in the leading edges of blades sometimes provide the conditions that allow fatigue cracks to start, and should be filed out and all edges rounded. Use fine emery cloth for finishing. Refer to Figure 8-5 for propeller blade care.
f. Check the condition of the propeller mounting bolts.
g. It is recommended that for severe damage, internal repairs and replacement of parts, the propeller should be referred to the Hartzell Factory or a certified repair station.
h. Each blade face should be sanded lightly and painted, when necessary, with a flat black paint to retard glare. A light application of oil or wax may be applied to the surfaces to prevent corrosion.
i. Check the condition of the low stop rods and feedback ring.
j. Grease blade hub through jerk fittings. Remove one of two fittings for each propeller blade; alternate the next time. Apply grease through the jerk fitting until fresh grease appears at the hole of the fitting removed. Care should be taken to avoid blowing out hub gaskets.

CAUTION

Do not attempt to rotate the propeller blades using blade arms, as damage will result to the feedback ring.

8-22. INSTALLATION OF PROPELLER. (Refer to Figure 8-4)

a. Clean propeller and engine flanges.
b. Lubricate and install a new O-ring on the engine shaft.
c. Install feedback ring puller P/N 51519 and pull the feedback ring fully forward. Use a standard 5/8 inch socket against the propeller hub. (Refer to Figure 8-9.)

CAUTION

Take the necessary precautions to avoid damaging the low stop rods (5) and the feedback ring.

d. Position the propeller on the engine flange and torque the propeller mounting bolts as follows:

NOTE

P/N B-3339 propeller attach bolts have the part numbers stamped inside the cupped head. These bolts require a 5/8 inch, 12-point socket head wrench. See Hartzell Service Instruction No. 140A.

1. Apply MIL-T-5544 or MIL-T-83483 Petrolated Graphite or Hartzell Lubricant P/N A-3338-( ) to bolt threads and bolt washer surfaces (and remainder of bolt if desired).
2. Install the eight B-3339 bolts and eight A 2048-2 washers through engine flange into propeller flange.
3. Torque all bolts to 40 ft.-lbs. and then to 80 ft.-lbs. following torque sequence "A" shown on Figure 8-4, Propeller Installation.
4. Final torque all bolts following torque sequence "B" shown on Figure 8-4 to 100 - 105 ft.-lbs.
5. Safety wire all bolts.

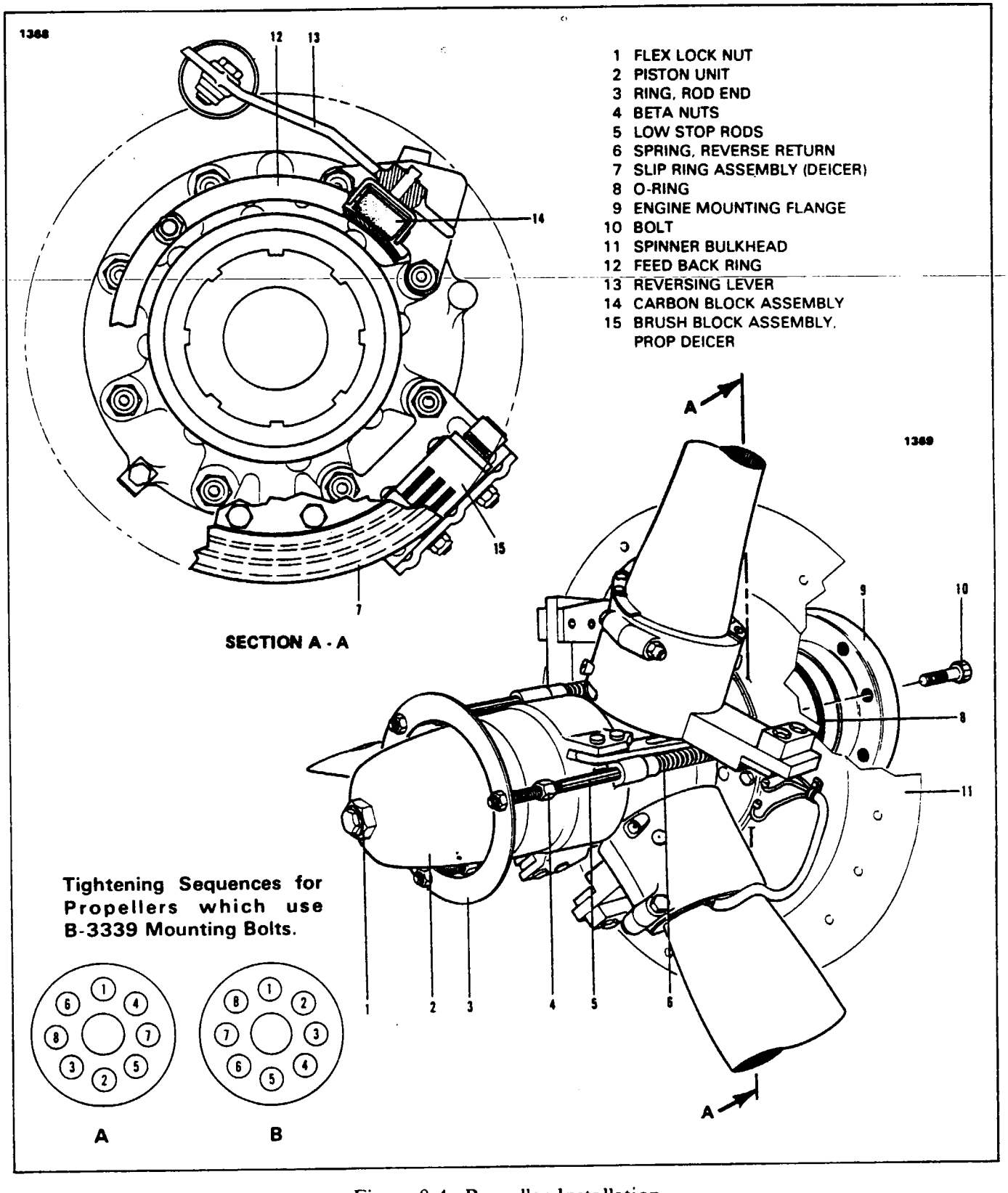

Figure 8-4. Propeller Installation

e. Install the deicer brush block (Refer to Section XIV for brush alignment procedures.)
f. Install the propeller reversing lever with the carbon block in the feedback ring. (Refer to Figure 8-9.)

NOTE

Check this clearance by holding the carbon block against one face of the feedback ring. Use fine sandpaper on the block to obtain this clearance. Ascertain that the block is free to rotate in the reversing lever. (Refer to Figure 8-9.)

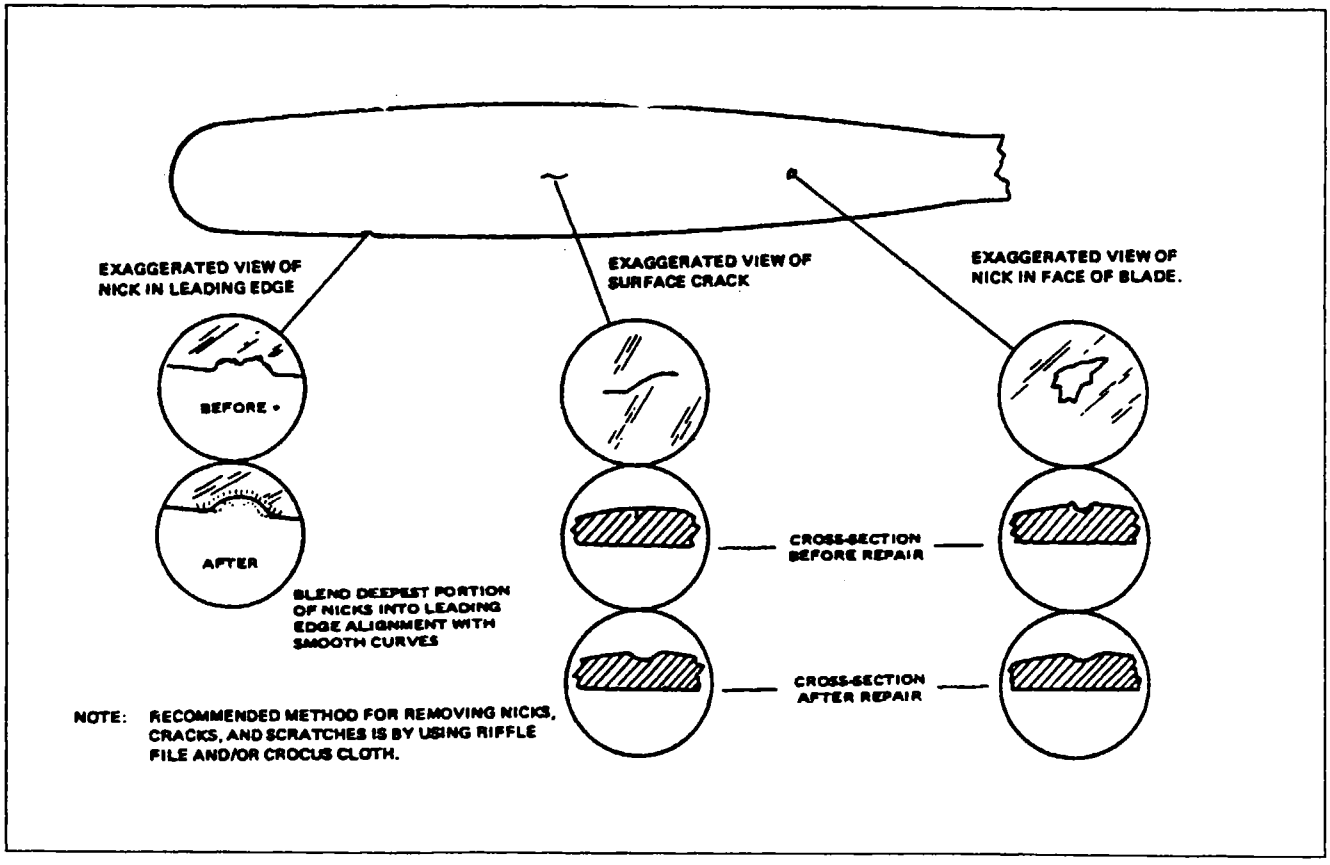

Figure 8-5. Typical Nicks and Removal Method

TABLE VIII-I. PROPELLER SPECIFICATION

Hub, Model Blade, Model	HC-B3TN-3B T10173-HB8 or T10173-B8	
Propeller RPM Setting Beta Nut Setting	Engine Static High RPM @2000 RPM	2200 RPM max. 20.2 degrees
Propeller Torque Limits	Description Propeller Mounting Bolts (P/N B3339)	Required Torque 100-105 ft.-lb. (Lubricated and tightened in stages - refer to text)
	Spinner Bulkhead Attachment Screws Spinner Attachment Screws Flex Lock (Dome) Nut Beta Ring Jam Nuts Low Pitch Stop, Propeller Nuts	65-100 in.-lbs. 40 in.-lbs. 120 ft.-lbs. 12 ft.-lbs. 22 ft.-lbs.

TABLE VIII-II. LIST OF VENDOR PUBLICATIONS

MODEL	VENDOR	PART NUMBER
PA-31T PA-31T1	Pratt and Whitney Engine Maintenance Manual Pratt and Whitney Engine Maintenance Manual	No. 3013242 No. 3030442
	Address: Pratt and Whitney Aircraft of Canada Limited. Box 10. Longueuil. Quebec Canada	
PA-31T Series	Engine Mounting Systems	Lord Bulletin No. SM-6304
	Address: Lord Aerospace Products 1635 West 12th Street Erie, Pennsylvania 16514	

g. Rotate the propeller slowly and check the run out of the feedback ring with a dial indicator. Run out must not exceed .010 of an inch total indicator. If the run out is excessive, loosen the nut on the front of the low stop rods and the jam nut at the feedback ring: adjust the low pitch stop rods to obtain the specified tolerance. Torque the jam nuts at the feedback ring to 12 foot-pounds. Torque the nut on the front of the low stop rods to 22 foot-pounds.

h. Check the Beta valve rigging. Refer to Pre-Run Rigging Procedure.

i. Perform an engine ground check and check the 2000 rpm torque setting per appropriate Paragraphs in this section.

8-23. PROPELLER ADJUSTMENT. Refer to appropriate paragraphs in this section for propeller and propeller control adjustments.

8-24. PROPELLER GOVERNORS.

8-25. REMOVAL OF PROPELLER CONSTANT SPEED GOVERNOR.

a. Remove the upper engine cowling per Paragraph 8-5.
b. Disconnect the electrical connections from the governor.
c. Disconnect the prop pitch control rod at the governor control lever.
d. Disconnect the pneumatic tube at the governor.
e. Remove bolt, washer, and nut connecting governor control arm to interconnecting rod.
f. Remove bolt, spacer, and nut which connect the control link to the propeller reverse lever.
g. Remove the clevis pin from the fork end of the Beta control valve.
h. Remove nuts and washers and withdraw governor from mounting pad. Remove gasket.

8-26. INSTALLATION OF PROPELLER CONSTANT SPEED GOVERNOR.

a. Install gasket over studs on governor mounting pad with the raised side of screen facing up.

b. Install governor and secure with washers and self-locking nuts. Torque nuts 170 to 190 inch-pounds.

c. Connect fork end of Beta control valve to reversing lever with pin and secure with washers and cotter pin.

d. Secure fork end of control link to the propeller reversing lever with bolt, spacer, washer and nut. Torque nut 24 to 36 inch-pounds and secure with cotter pin.

e. Connect governor control arm to interconnecting rod with bolt, washer and nut. Torque nut 25-35 inch-pounds and secure with cotter pin.

f. Connect the pneumatic tube at the governor; torque coupling nut 90 to 100 inch-pounds and lockwire.

g. Connect and secure electrical connections to the governor.
h. Connect the prop pitch control rod to the governor control lever.
i. Check the governor adjustments per Paragraph 8-27.
j. Reinstall the engine cowling.

8-27. CONSTANT SPEED GOVERNOR ADJUSTMENTS. (Refer to Figures 8-8 and 8-11.) After repair or replacement of the propeller governor, the adjustments must be checked as follows:

a. With the engine static, disconnect the front air pressure tube at the governor connection and blank off nipple and pneumatic line with suitable caps.

b. Perform the pre-start check. (Refer to Paragraph 8-58, Steps a thru c.)

c. Start the engine (refer to Paragraph 8-58, Steps d thru f), and allow it to warm up in the idle setting until normal operating oil temperature is reached, 75° C (165° F) minimum.

d. Advance the power control lever to obtain 80% Ng, and perform two feathering cycles to purge air from the system. To reduce feathering time, turn feathering adjuster (5, of Figure 8-11) counterclockwise.

NOTE

Two complete turns (counterclockwise from the nominal setting) is the maximum permitted adjuster range.

e. Set propeller control lever in fine pitch, and advance the power control lever sufficiently to allow the propeller to constant speed. Temporarily mark the position of the lever on the quadrant and record Ng.

f. Loosen the locknut and adjust the governing maximum speed adjuster (1, of Figure 8-11) to obtain the desired Np. Counterclockwise rotation of screw increases speed. Tighten the locknut when adjustment is completed.

g. Record Np, torque and fuel flow.

h. Shutdown the engine and reconnect the front air pressure tube at the governor. Torque 90 to 100 inch-pounds, and restart the engine.

CAUTION

Do not disturb the pneumatic maximum adjustment (2, of Figure 8-11).

i. Advance the power lever to position previously marked, and compare Ng with figure previously recorded. If Ng has changed from previous value, recheck that the air bleed link (27, of Figure 8-8) is locked hard against the pneumatic maximum stop (28, of Figure 8-8). Note that an Ng change of up to 100 rpm is acceptable, but if the change is above this, replace the propeller governor.

j. Shutdown the engine, disconnect the interconnect rod (22, of Figure 8-8) at the air bleed link and secure link to minimum stop.

k. Restart and run engine. With the propeller control lever set in fine pitch, advance the power control lever sufficiently to obtain a constant speed condition and check that Np governs at 95% ± 1% of maximum speed set in Step (f). Adjust the pneumatic minimum eccentric adjuster (3, of Figure 8-11), as necessary to meet this requirement.

l. Shutdown the engine and reconnect the air bleed link (27, of Figure 8-8) to the interconnect rod (22, of Figure 8-8).

m. Restart the engine and check the reverse power setting.

8-28. PROPELLER OVERSPEED GOVERNOR.

8-29. REMOVAL OF PROPELLER OVERSPEED GOVERNOR.

a. Remove the engine cowling.

b. Disconnect the electrical leads from the overspeed governor.

c. Remove the nuts and washers securing the overspeed governor to the reduction gearbox and withdraw the assembly from the mounting studs. Discard the mounting gasket.

d. Examine the overspeed governor drive for damage and wear; replace if necessary.

8-30. INSTALLATION OF OVERSPEED GOVERNOR.

a. Install a new mounting gasket over the studs.

b. Install the overspeed governor on the mounting pad; be certain the drive shaft is properly engaged. Secure with washers and self-locking nuts; torque to 125 to 170 inch-pounds.

c. Connect the electrical leads to the overspeed governor.

d. Check the overspeed governor operation per Paragraph 8-31.

e. Reinstall the engine cowling.

8-31. OVERSPEED GOVERNOR OPERATIONAL CHECKS. Check the overspeed governor operation as follows:

a. Start the engine and allow the engine instruments to stabilize.

b. Set the power levers to obtain 1625 rpm propeller speed.

c. Set the propeller control to full forward, the "Reverse Not Ready" lights out.

d. Push up the Hydraulic Topping Governor switches and observe the drop in propeller rpm to approximately 1540 rpm.

e. Release the switches; the prop rpm should increase to the original rpm.

8-32. ENGINE. For detailed information concerning the following items refer to Table VIII-II for appropriate Pratt and Whitney Engine Maintenance Manual.

a. Engine - General
b. Reduction Gear and Shaft Section
c. Air Inlet Section
d. Compressor Section
e. Combustion Section
f. Turbine Section
g. Accessory Drives

8-33. ENGINE REMOVAL. (Refer to Figure 8-6.) The removal of either engine is basically the same except for the routing of some wires, cables and lines, and the freon compressor assembly which is mounted on the right engine. Remove the engine as follows:

a. Place a tail stand under the aircraft.
b. Turn off all cockpit switches and disconnect battery.
c. Move the fuel shutoff valve to the off position.
d. Remove the engine cowling per Paragraph 8-5.
e. Remove the access panels on the top and sides of the nacelle.
f. Drain the engine oil. (Refer to Section II.)
g. Remove the propeller per Paragraph 8-20.
h. Disconnect all fluid hoses, clamps, and electrical leads attached to the engine and engine mount from the fire wall. Disconnect the freon compressor lines (right engine only) and remove the compressor and compressor drive. (Refer to Section XIII.)

NOTE

In some manner identify disconnected items and mark all clamp locations to facilitate installation.

i. Remove the fire extinguisher system (if installed). (Refer to Section XIV.)

WARNING

Use caution when working with the fire extinguisher system. Accidental discharge may cause bodily injury.

j. Disconnect oil cooler lines at engine and cap lines.

NOTE

The oil cooler system remains attached to the fire wall and the ice protection system is removed with the lower cowling.

k. Disconnect and remove the rear top left and top right fire seals from the engine.
l. Disconnect all drain lines attached to the engine, and the fuel lines attached to the scavenge pump.
m. Disconnect the power control cable from the fuel control unit actuating lever and remove the cable from the support bracket. Disconnect and remove the support bracket.

CAUTION

Do not bend the power control cable in the direction offering the greatest resistance, as damage will be done to the cable.

n. Disconnect the starting control cable from the start control lever arm and remove the cable clamp from the cable support bracket. Disconnect and remove the support bracket.

o. Disconnect propeller control cable from the propeller control rod. Remove cable clamps and draw the cable aft to the fire wall.

p. Attach lifting sling to the engine suspension points and using a one-half ton hoist, support the engine to allow the engine and mount to be disconnected from the fire wall.

q. Swing the engine and mount free from the fire wall; check to be certain no attachments remain to obstruct its removal.

CAUTION

Do not tilt engine more than 22 degrees, as with the engine static engine oil may contaminate the labyrinth oil seals resulting in increased oil consumption.

r. Move the engine away from the aircraft and place on a suitable stand.

s. Remove the accessories and equipment to be installed on the new engine and tag or identify all items removed to facilitate installation.

NOTE

If the engine removed is expected to be inactive for a period of time, refer to the Pratt and Whitney Engine Maintenance Manual for the necessary preservation schedule.

8-34. ENGINE BUILDUP. Engine buildup consists of transferring the necessary accessories and equipment from the engine removed for overhaul to a new engine. Replace safety wire, lock washers, gaskets, and rubber hoses when needed to complete the engine assembly for installation in the aircraft.

NOTE

Replacement engines must be purchased through the Piper Service Department to be compatible with the Piper installation. Refer to Section II, Table II-I. Leading Particulars for specific Rear Accessory drives for Right and/or Left engines.

CAUTION

Refer to the Pratt and Whitney Engine Maintenance Manual before attempting to remove a new engine from the shipping container.

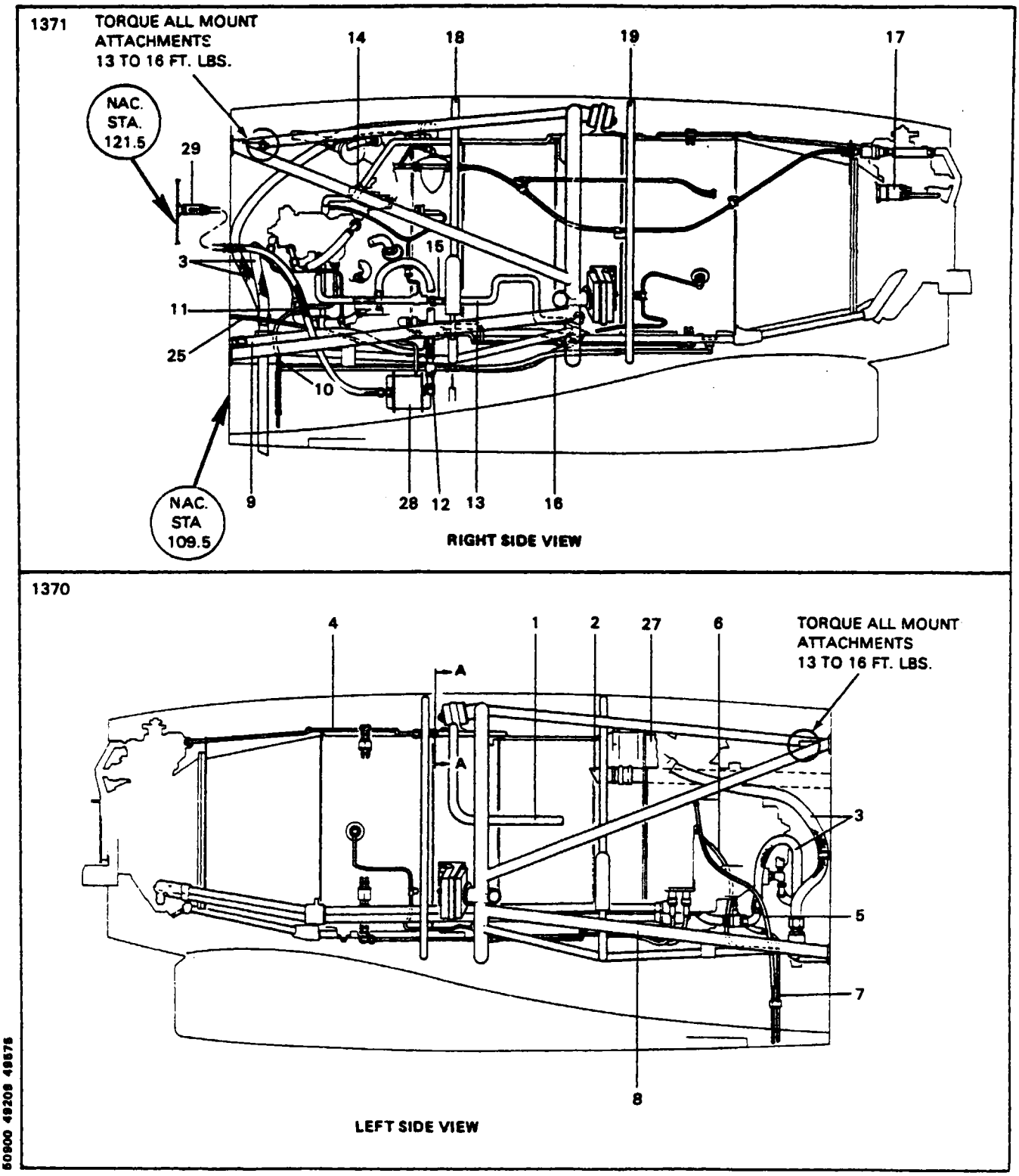

Figure 8-6. Engine Installation (Typical)

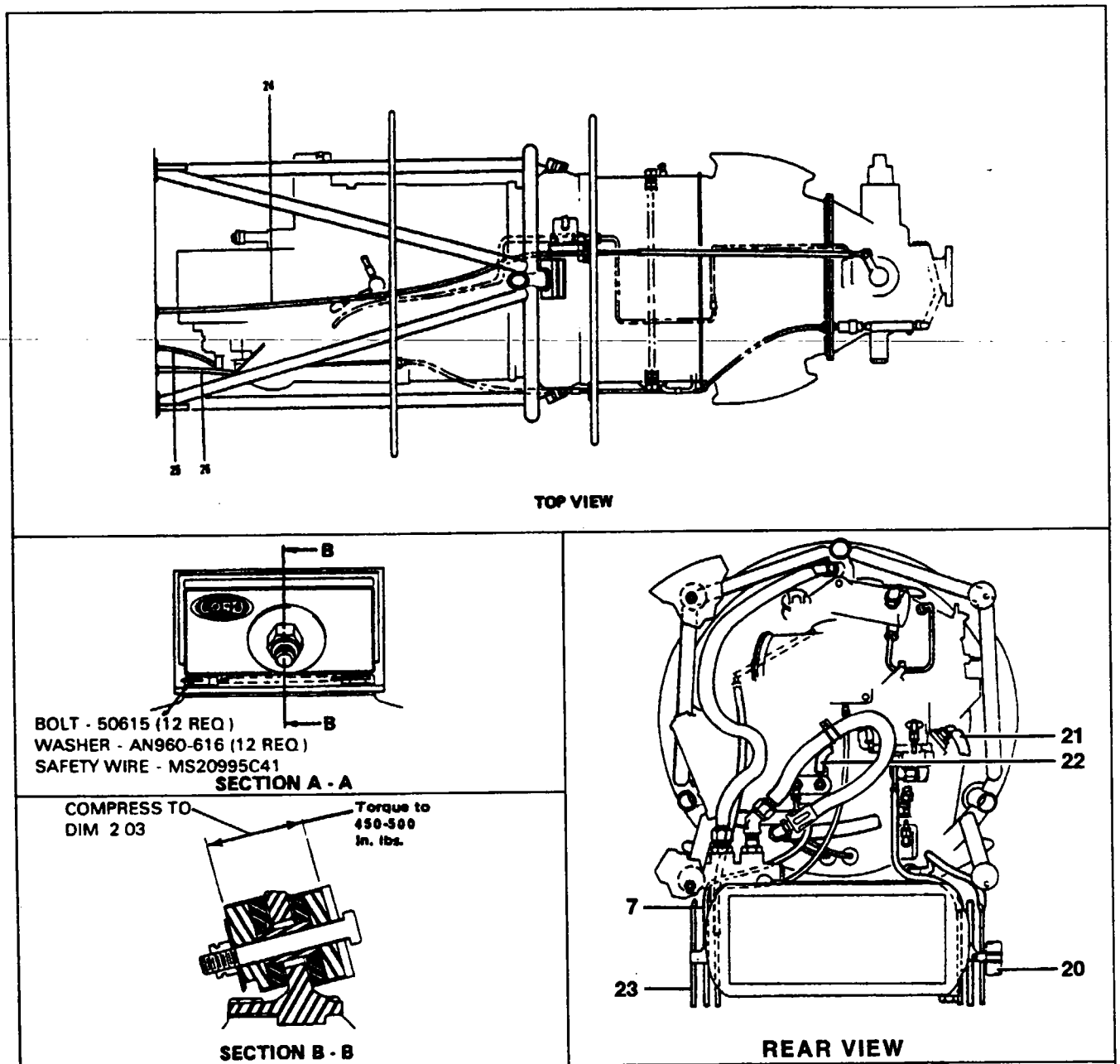

1. BLEED AIR PRESSURE
2. JET PUMP INLET DUCT
3. OIL COOLER HOSE
4. PROPELLER GOVERNOR AIR PRESSURE LINE (Py)
5. OIL DRIP SHIELD DRAIN
6. STARTER GENERATOR DRAIN
7. HYDRAULIC PUMP DRAIN
8. ENGINE MOUNT ASSEMBLY
9. OIL DRAIN
10. START CONTROL DRAIN
11. FUEL CONTROL DRAIN
12. SOLENOID VALVE
13. BREATHER LINE
14. P3 LINE
15. P3 FILTER (PA-31T ONLY)
16. DRAIN LINE
17. TORQUE PRESSURE TRANSMITTER
18. REAR FIRE SEAL
19. FRONT FIRE SEAL
20. OIL BREATHER
21. OIL PRESSURE LINE
22. HYDRAULIC LINE
23. FUEL DRAIN
24. PROPELLER CONTROL CABLE
25. START CONTROL CABLE
26. POWER CONTROL CABLE
27. STARTER GENERATOR COOLING DUCT
28. SCAVENGER PUMP
29. UNION

Figure 8-6. Engine Installation (Typical) (cont.)

8-35. ENGINE INSTALLATION. The installation of either engine is basically the same except for the hookup and routing of some wires, lines, and the freon compressor installation on the right engine. Before installing the engine, be certain all engine accessories are properly installed, torqued and safetied.

a. With the engine suspended from a one-half ton hoist, carefully swing the engine assembly in place. Use caution not to damage any engine components, plumbing and wiring.

b. Install the engine mount and torque the mounting bolts to value shown in Figure 8-6, Section B-B.

c. Route and reconnect all previously disconnected fluid hoses, lines, and electrical leads from the fire wall to the respective connections on the engine and secure with the appropriate clamps. (Refer to Section XIII for freon compressor installation, right engine only.)

NOTE

Prior to installing compressor bleed air line fitting to engine, coat the bolt threads which secure the fitting to the compressor case with Fel-Pro C5-a Hi-Temp. thread compound. Torque the bolts 65 to 85 inch-pounds and safety with MS20995-C41 safety wire. Apply an anti-seize compound to all male tubing threads; be certain the compound does not enter the system.

d. Route the propeller control cable through the bracket and clamp assembly and reconnect to the propeller control rod.

e. Connect the start control cable to the start control lever arm and attach the cable clamp to the cable support bracket.

f. Connect the power control cable to the fuel control unit power lever.

g. Install the propeller per Paragraph 8-22.

h. Adjust the engine and propeller controls. (Refer to Paragraph 8-38.)

i. Reinstall the fire extinguisher system, if previously installed.

WARNING

Use extreme caution when working with the fire extinguisher; accidental discharge may cause bodily injury.

j. Refill the oil tank with the specified type and amount of oil.

k. Connect the battery.

l. Reinstall access plates on the engine nacelle.

m. Perform the post installation procedures.

n. Check for fuel and oil leaks and security of the engine components.

8-36. ENGINE CONTROLS.

8-37. CONDITION LEVER. The condition lever controls the start control valve, which on the PA-31T1, is part of the fuel control unit, and on the PA-31T, is located on the lower right side of the accessory gear box. The condition lever has two positions, "on" and "off." The start control acts as a shut-off valve for the fuel from the fuel control to the flow divider and dump valve assembly for fuel flowing to the primary and secondary fuel nozzles.

As a second function, the condition lever operates one of the two switches necessary for ignition. Power for the ignitor box is supplied through an overhead arm switch to a micro switch located at the pedestal then to the ignitor box.

8-38. RIGGING CONDITION LEVER.

a. Rig the lever by adjusting the cable end so the start control lever is against the stop in the run position. The cockpit control lever will have approximately 0.062 inches spring back.

b. Pull the condition lever in the cockpit full aft and be certain the start control unit lever on the start control has reached its limits of travel in the idle cutoff position.

c. Check all jam nuts for security and control linkage attachment hardware for safety.

d. On the PA-31TI only, the flight idle adjusting nut should be backed off to the end of the thread to render in operative. Move lever to ensure in the forward position. Be certain there is clearance between the nut, spacer and the lever assembly. (Refer to Figure 8-11, Sketch C.)

8-39. IGNITION CUTOFF SWITCH. The ignition cutoff switches are located in the control pedestal and are activated by the start control lever.

8-40. ADJUSTMENT OF IGNITION CUTOFF SWITCH.

a. Set the condition levers in the cutoff position.

b. With the adjustment screw on the switch bracket, adjust the switch toward the condition lever until the switch is actuated at 1 inch of forward travel of the condition lever. The adjustment screw may be reached by inserting a long screwdriver through the travel slot of the start control lever in the pedestal cover.

8-41. PROPELLER PITCH CONTROL LEVER. The propeller control lever controls propeller pitch and propeller RPM through a constant speed governor located at the forward top of the engine reduction gear box.

8-42. RIGGING PROPELLER PITCH CONTROL LEVER.

a. Adjust the pitch control lever so the governor control arm has contacted the high rpm stop and the pitch control lever has approximately 0.062 inches spring back. This is made by adjusting the pitch control rod end at the propeller governor.

b. Secure jam nuts and check attachment hardware for safety.

8-43. POWER LEVER. The power lever cable is attached to the propeller cam box and fuel control through a power lever arm. The propeller cam is attached to the fuel control through a fuel control unit interconnect rod. The propeller cam is also attached to the beta valve and propeller governor through this push/pull control.

CAUTION

When you are performing any maintenance on the power lever, remember to disconnect the reversing linkage either at forward clevis attachment or at the rear clevis attachment on the propeller cam.

This will prevent damage to the reversing linkage in the event that you have to place the power levers in reverse range with the engine not running.

8-44. RIGGING THE POWER LEVER. (Refer to Figure 8-8.)

a. Remove the clevis pin attaching the wire rope to the cam lever.

b. Remove the bolts holding the power lever cable to the input arm (17) and fuel control interconnect rod (9).

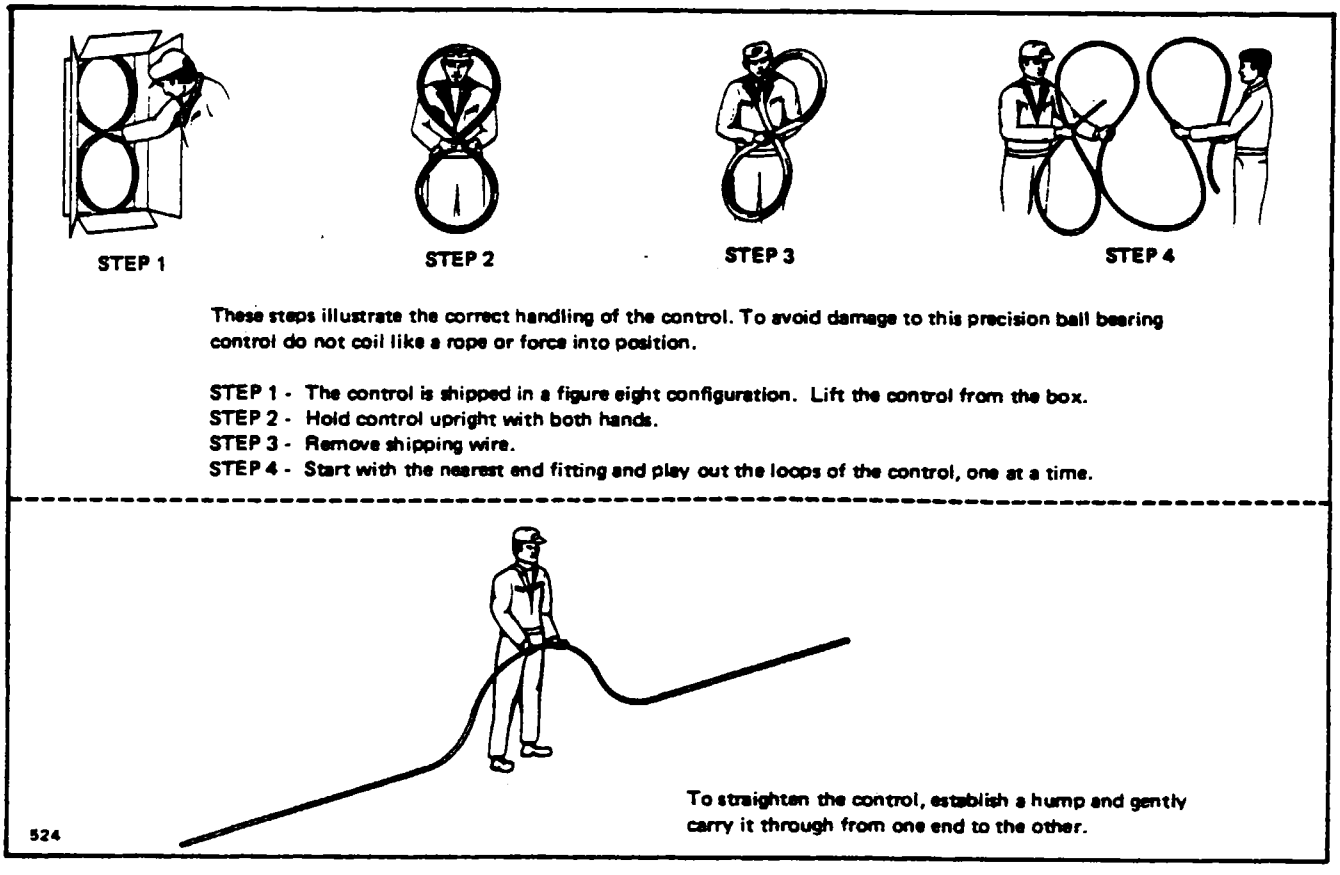

Figure 8-7. Throttle Control Cable Handling Procedure

c. Establish the track point by moving the follower pin rearward in the cam slot until the cam just starts to move rearward, then move the follower pin forward until the cam stops moving.

d. While holding the track point position, insert tool P/N 51516 behind the cam onto the pin and hold the cam and tool in position with a small pair of vise grip pliers.

NOTE

Install the pliers tight enough to hold everything from moving, but not tight enough to damage the cam.

Use of a dial indicator to sense Beta Cam movement may be an aid to establishing track point.

e. Install rigging template (P/N 51518) with locator pin assembly (P/N 51513). (Refer to Figure 8-8.)

f. When rigging the input arm on the pivot pin, first remove the spline imprints on the inside of the input arm clamp.

NOTE

When installing an input arm make certain both engines have the same length lever. (Refer to the Parts Catalog.)

g. Position the power lever input arm (17) 90 degrees from the pivot pins. (Refer to Figure 8-8, Sketch A.) Place bolt through lower end of arm and lock in place.

NOTE

As you tighten the lock bolt, keep checking the arm to assure that it has not moved and do not put too much force on the bolt as you may push or pull the vise grip pliers loose and you will have to start all over again with track point set-up.

It is very important that the input arm be securely locked on the shaft to prevent it from rotating on the shaft during engine operation.

8-45. RIGGING THE FUEL CONTROL UNIT TO THE FUEL CONTROL ACTUATING LEVER.

NOTE

Cam box must be at "Track Point" for this adjustment and whenever the engine is being rigged.

a. Install Beta Rigging template (P/N 51518) and locator pin (P/N 51513).

b. Remove the interconnecting rod and rotate fuel control unit input arm (7) fully counterclockwise and then slowly clockwise until the fuel governor cam pick-up point is felt. This point must be 22.5 degrees ± 0.6 degrees indicated on the template. (Refer to Figure 8-8.)

NOTE

Initial movement of the fuel control unit input arm from the fully counterclockwise position is free from resistance until a pick-up point is recognized when a slight resistance is felt.

c. If the fuel control unit input arm (7) must be adjusted, unsafety the fuel control unit input arm extension (8) and loosen the arm. Rotate the serrated washer (6) on the fuel control unit and fuel control arm to obtain the proper rigging.

NOTE

The inner serrated increments are 15 degrees and the outer serrated increments are 14.4 degrees giving an adjustment in increments of 0.6 degrees.

d. Adjust the length of the fuel control unit interconnect rod (9) so that when the fuel control unit input arm (7) is at the 22.5 degree position the rod end bearing of the fuel control unit interconnect rod (9) just aligns with the top hole of the fuel control unit actuating lever (16). Then lengthen the control rod (9) by unscrewing one rod end bearing 1.5 turns. Install the fuel control unit control rod and lock jam nuts and safety.

e. Set the reverse dead band to approximately 5/16 of an inch. (Refer to Sketch B, Figure 8-8.)

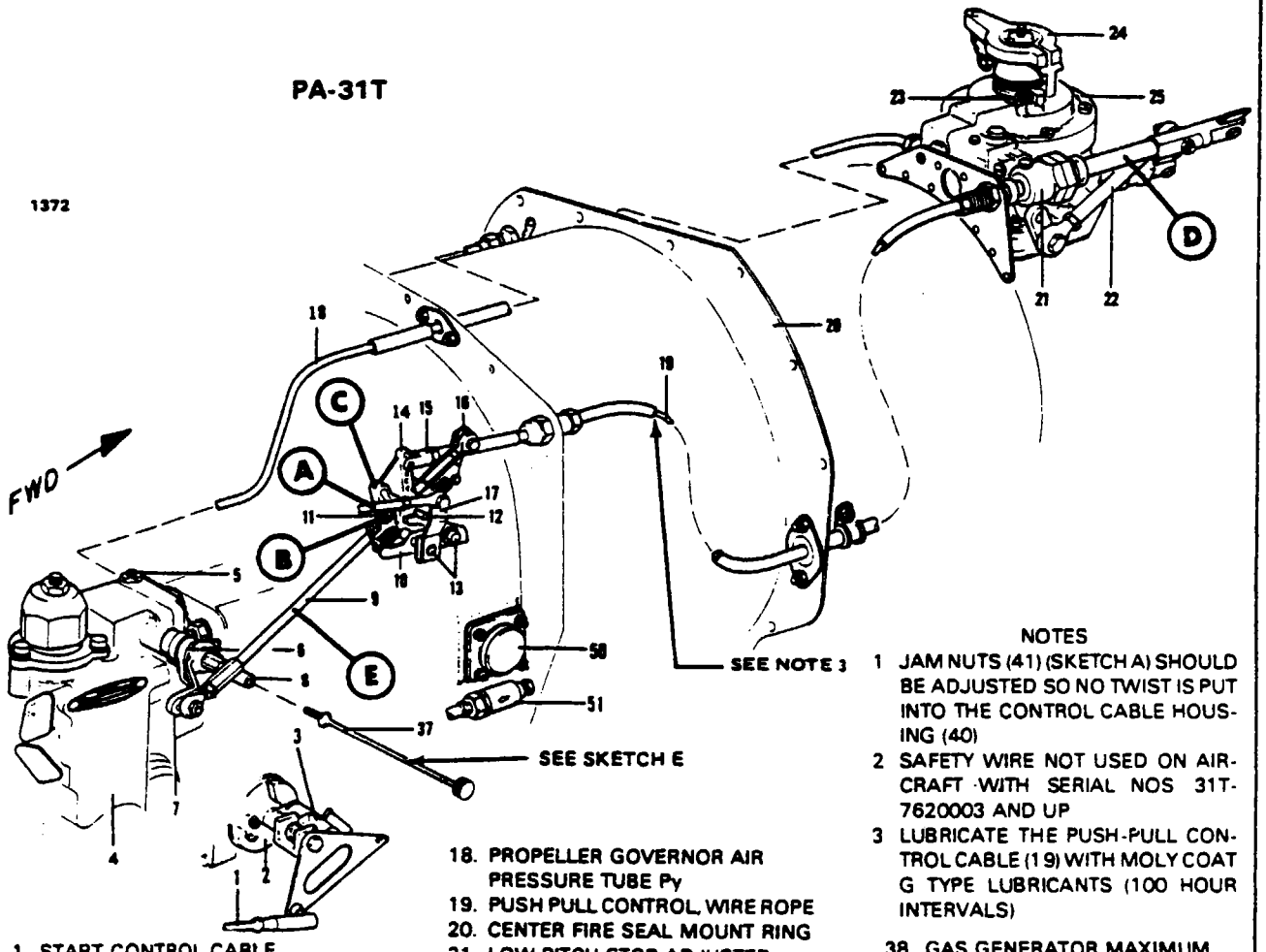

NOTES

1 JAM NUTS (41) (SKETCH A) SHOULD BE ADJUSTED SO NO TWIST IS PUT INTO THE CONTROL CABLE HOUSING (40)

2 SAFETY WIRE NOT USED ON AIRCRAFT WITH SERIAL NOS 31T-7620003 AND UP

3 LUBRICATE THE PUSH-PULL CONTROL CABLE (19) WITH MOLY COAT G TYPE LUBRICANTS (100 HOUR INTERVALS)

1 START CONTROL CABLE
2. STARTING CONTROL UNIT
3. STARTING CONTROL ARM
4. FUEL CONTROL UNIT
5 ADJUSTMENT (IDLE SPEED SET) (TOOL P/N 51517)
6. F.C.U. ARM SERRATED SPACER
7. F C U. ARM
8. F C.U ARM EXTENSION
9. F.C.U. INTERCONNECT ROD
10 CONTROL LEVER MOUNTING BRACKET
11. ADJUSTMENT, (DEAD BAN)
12. CAM FOLLOWER PIN
13. PIVOT PINS
14 PROPELLER CONTROL CAM
15. CLEVIS
16. FUEL CONTROL ACTUATING LEVER
17. POWER LEVER INPUT ARM
18. PROPELLER GOVERNOR AIR PRESSURE TUBE Py
19. PUSH PULL CONTROL, WIRE ROPE
20. CENTER FIRE SEAL MOUNT RING
21. LOW PITCH STOP ADJUSTER
22. PROPELLER GOVERNOR INTERCONNECT ROD
23. PROPLLER SPEED SELECT LEVER, MAX. STOP
24. CONTROL LEVER
25. PROPELLER GOVERNOR UNIT
26. JAM NUT
27. AIR BLEED LINK (RESET ARM)
28. MAXIMUM STOP
29 WIRE ROPE CLEVIS
30. PROPELLER REVERSING LEVER
31. BETA VALVE CLEVIS
32. CAP NUT
33. CARBON BLOCK
34. TOOL, (BETA RIGGING SHIM P/N 51516
35. VISE GRIP PLIERS
36. TOOL (TEMPLATE P/N 51518)
37 TOOL (LOCATED PIN P/N 51513)
38. GAS GENERATOR MAXIMUM STOP
39. SWITCH
40. CONTROL CABLE HOUSING
41. JAM NUTS
42. SEAL NUT
43. CONTROL SHAFT
44. BETA STOP
45. JAM NUT
45A. WASHER
46. WASHER BOLT
47. CONTROL PIVOT
48. ROD END
49. BOLT
50. OIL FILTER COVER
51. P3 AIR SUPPLY FILTER
52. JAM NUT
53. ACCELERATION ADJUSTMENT
54. START CONTROL ARM
55. START CONTROL CABLE

Figure 8-8. Engine Controls

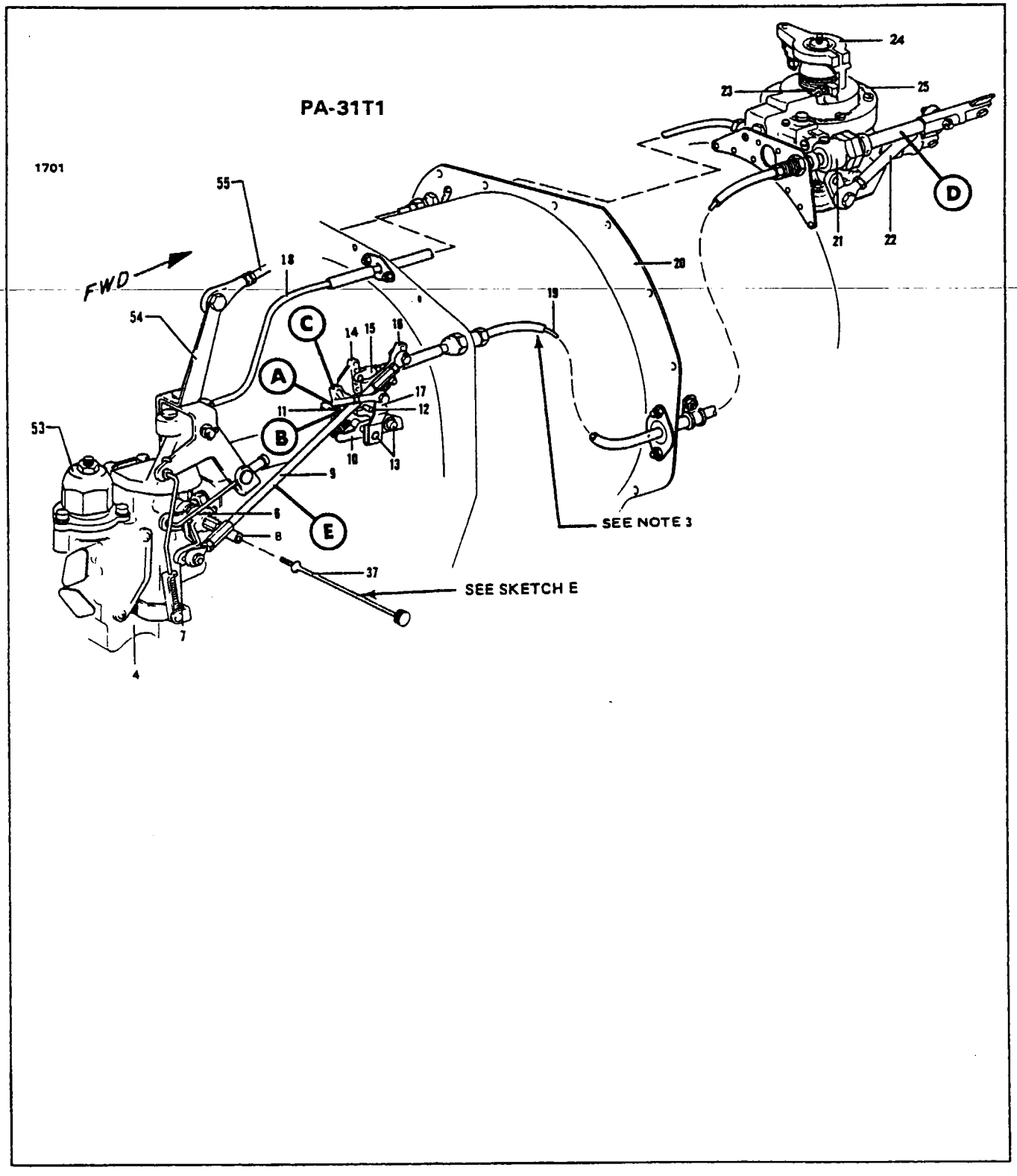

Figure 8-8. Engine Controls (cont.)

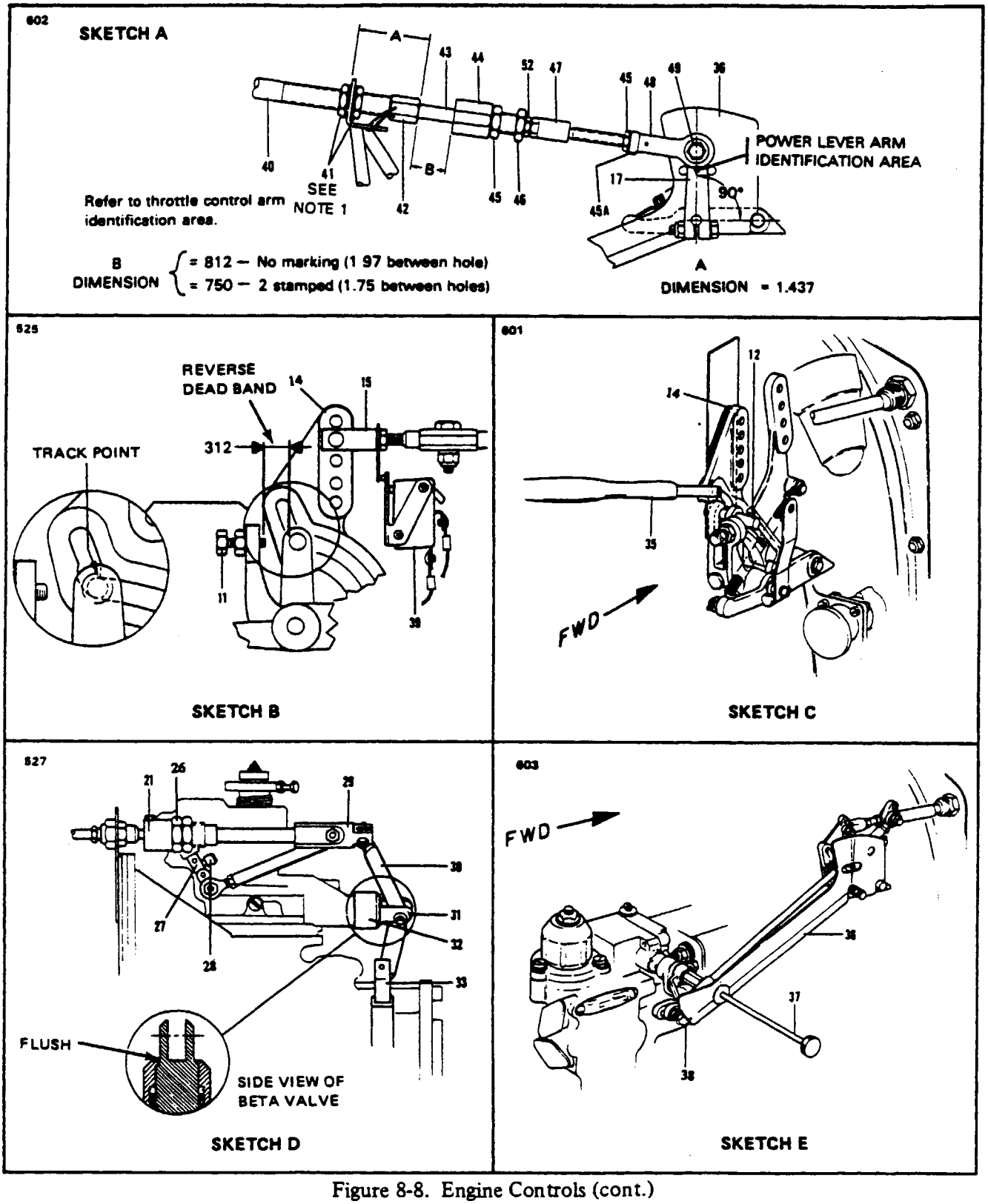

Figure 8-8. Engine Controls (cont.)

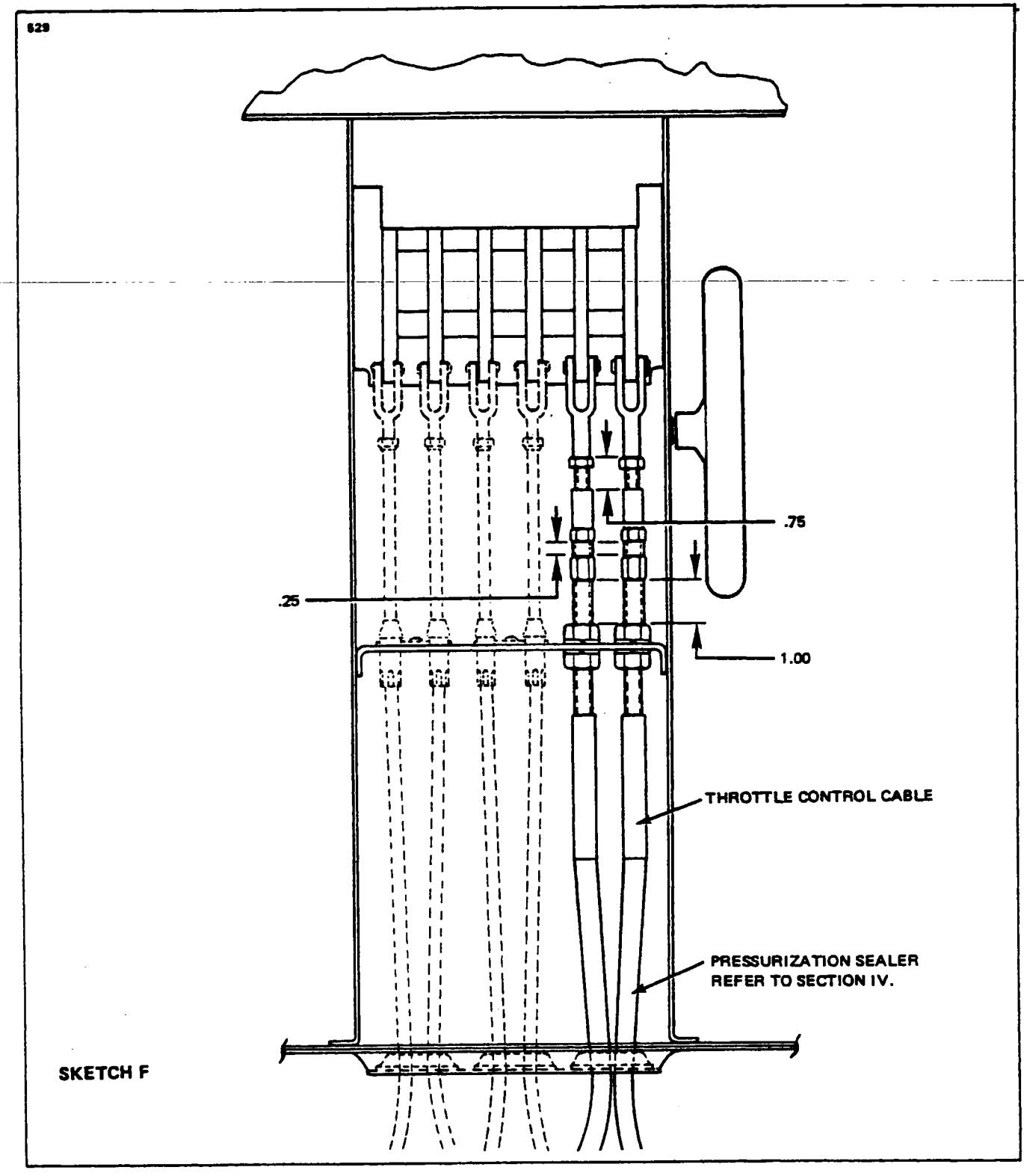

Figure 8-8. Engine Controls (cont.)

8-46. RIGGING THROTTLE CONTROL CABLE TO THE POWER LEVER ARM. (Refer to Figure 8-8.)

a. Remove control cable attaching bolt (49) from the power lever arm (17).

b. Lock cam lever at track point with tool (P/N 51516). (Refer to Paragraph 8-44, (cam box) rigging.)

c. Install beta rigging template (P/N 51518) and locator pin (P/N 51513).

NOTE

Power lever arm must be 90 degrees from pivot pins.

d. With the power control lever in the cockpit at idle position, adjust power cable rod end (48) to a slip fit to the power control arm attaching bolt (49).

e. Adjust the reverse beta stop (44) to the proper length.

NOTE

Leave the control cable disconnected to prevent someone pulling the power lever into reverse and moving the track point.

8-47. BETA VALVE RIGGING PROCEDURE.

a. Check the feedback ring for run out and carbon block clearance. (Refer to Figure 8-9.)

b. Install the dial indicator to measure run out on the forward inside surface of the feedback ring.

NOTE

When installing a new brush block remove an equal amount of material from both sides of the block to obtain proper clearance.

c. Disconnect the propeller governor interconnect rod at the governor arm.

d. While holding the reverse arm forward the piston should be just flush with the beta valve cap nut. If adjustment has to be made, cut the safety wire on the low pitch stop adjuster and jam nut. Loosen the jam nut and while holding the barrel nut, turn the barrel in or out to adjust the piston flush with the cap nut. Remember to keep checking flush fit while holding forward pressure on linkage. After adjusting the beta valve tighten and safety the barrel and jam nut.

8-48. LOW PITCH STOP SWITCH ADJUSTMENT. (Refer to Figure 8-9.) The low pitch stop switch is mounted on the engine reduction gear case and is actuated by the movement of the feedback ring and propeller reversing lever. Adjust the switch as follows:

a. Ascertain that the switch (7) is adjusted to obtain .032 of an inch space between the actuator arm and switch body when the plunger (5) is fully depressed.

b. Should the switch (7) require adjustment to obtain the .032 dimension, loosen the switch mounting screws slightly and make the adjustment with the adjusting bolt (13); then secure the switch mounting screws.

c. Install the feedback ring puller (P/N 51519). Use a 5/8 standard socket against the propeller hub.

d. Adjust the plunger (5) and jam nut (6) to have the low pitch stop switch (7) click closed upon reaching 1/4 inch forward movement of the feedback ring (10).

e. Recheck this setting and make any final adjustments. Lock the jam nut on the plunger and torque 20-25 inch-pounds. Remove the puller after making this setting. Ascertain that the plunger (5) moves smoothly in the bracket (11).

f. Remove the feedback ring puller (P/N 51519).

8-49. RIGGING OF PROPELLER GOVERNOR INTERCONNECTING ROD TO PROPELLER PUSH-PULL CABLE. (Refer to Figure 8-8.)

NOTE

Before rigging the interconnecting rod, make certain the Beta valve is properly rigged.

a. With the interconnect rod (22) removed from the propeller governor air bleed link arm (27), loosen the rod end lock nuts. Hold the governor link arm forward against the low pitch adjuster stop (28) and adjust the interconnect rod to a slip fit over the attaching bolt.

b. Pre-load the interconnecting rod by shortening the over all length of the rod by turning each rod end fitting one-half turn. Tighten lock nut to 32-36 inch-pounds and safety wire.

c. Secure the rod end with the attaching hardware and torque bolt and nut to 25-35 inch-pounds and safety.

8-50. RIGGING THE PUSH-PULL CABLE TO CAM BOX. (Refer to Figure 8-8.)

NOTE

Cam box must be held at track point.

a. While holding forward pressure on the reversing linkage, attach the clevis (15) at the end of the reversing push-pull cable to the second hole on the reversing cam lever.

b. Install clevis pin to a slip-fit and secure pin.

8-51. PROPELLER REVERSE SWITCH ADJUSTMENT. (Refer to Figure 8-8.) The propeller reverse switch (39) is mounted on the rear propeller reverse linkage and is actuated by movement of the propeller control cam (14) in the reverse direction. Adjust the switch as follows:

a. Be certain that all mechanical linkage is properly adjusted.

b. Loosen the attachment screws and rotate the switch counterclockwise until a click can be heard.

c. Move the switch a slight amount more approximately 0.031 of an inch and tighten attachment screws.

d. Check that by depressing the switch pickup trigger, NO click is heard.

8-52. REVERSE NOT READY SWITCH ADJUSTMENT. On the aircraft a reverse not ready light is installed on the pedestal forward of the propeller controls. One switch for each control is actuated off when the propeller controls are full forward (or low pitch). The lights are operational only when the landing gear is placed in the down position and the propeller controls are not full forward. The two micro-switches are adjusted as follows:

a. Adjust the screws on the prop control levers to activate the switches when the control levers are in the full forward position against the stops.

b. Lock the screws in position with nuts.

c. Check the adjustment by moving the control levers full forward and listen for the micro-switch to activate.

8-53. THROTTLE CONTROL CABLE HANDLING AND STORAGE (POWER LEVER). The throttle control cables require special handling, storage and installation to prevent irreversible damage to the cables. The cables utilize close spaced ball bearings above and below a ribbon core of stainless steel. The following handling and storage procedures should be observed:

a. Uncoiling of the cable should be done as shown in Figure 8-7.

b. After the cable has been uncoiled the ribbon should be straightened. This assures that the control is not twisted prior to installation.

c. Pliers or similar devices should not be used to grip any surface of the control.

d. Use the wrench flats on the end fittings and the terminal ends to prevent twisting when torquing nuts or attaching hardware.

e. The bend radii shall be seven inches minimum.

f. The plane of bend can be changed by allowing the control to coil easily into the new plane.

g. The control cable assemblies should never be lubricated.

h. Do not twist, crimp, dent, apply side pressure, or stand on the control assembly. It is a precision ball bearing device and improper handling will seriously affect its operation.

8-54. THROTTLE CONTROL CABLE REMOVAL AND INSTALLATION (POWER LEVER).

a. Observe handling precautions noted in Paragraph 8-53.

b. Remove access cover aft of the nose gear doors, inboard wing leading edge fairing, nacelle access covers aft of engine firewall, upper engine cowling and pedestal access covers.

c. Before disconnecting cable obtain measurements of existing installation using the following procedure. (Refer to Figure 8-8.)

1. Set throttle to idle and lock cam box similar to method for setting track point, do not disturb engine rigging.
2. Using calipers measure the distance between seal nut (42) and beta stop (44).
3. Back seal nut (42) off and measure distance to end of threads.
4. Count the number of control pivot threads (47) engaged in rod end (48).

d. Cable to be replaced should be removed. Note routing and attachment points for installation of new cable.

e. Starting at the access hole aft of nose gear doors work the control cable through the fuselage into the wing leading edge and up to the nacelle attachment point. The control should be routed without any restraint at either end or any undo forcing, during installation.

f. Ascertain that cable has been routed properly. Clamps should not be overtightened; cables should be free to move through the clamps.

g. Check for smooth operation of control before connecting to attachment points.

h. Connect control cables to pedestal throttle lever per Figure 8-8, Sketch F.

i. Install control cables to power lever arm as shown in Figure 8-8, Sketch A. Use measurements obtained in Step c, above.

j. Reseal throttle cable at floor line, refer to Section IV.

k. Run the airplane and make the following checks per instructions given in this section:

1. Forward gas generator (Ng) pickup dead band.
2. Power lever alignment check.
3. Reverse maximum power setting.
4. Check that maximum (Ng) speed adjustment contacts part power trim stop.

l. If engine rigging is disturbed it will be necessary to perform pre-run rigging and adjustments of power control and continue through final engine adjustments.

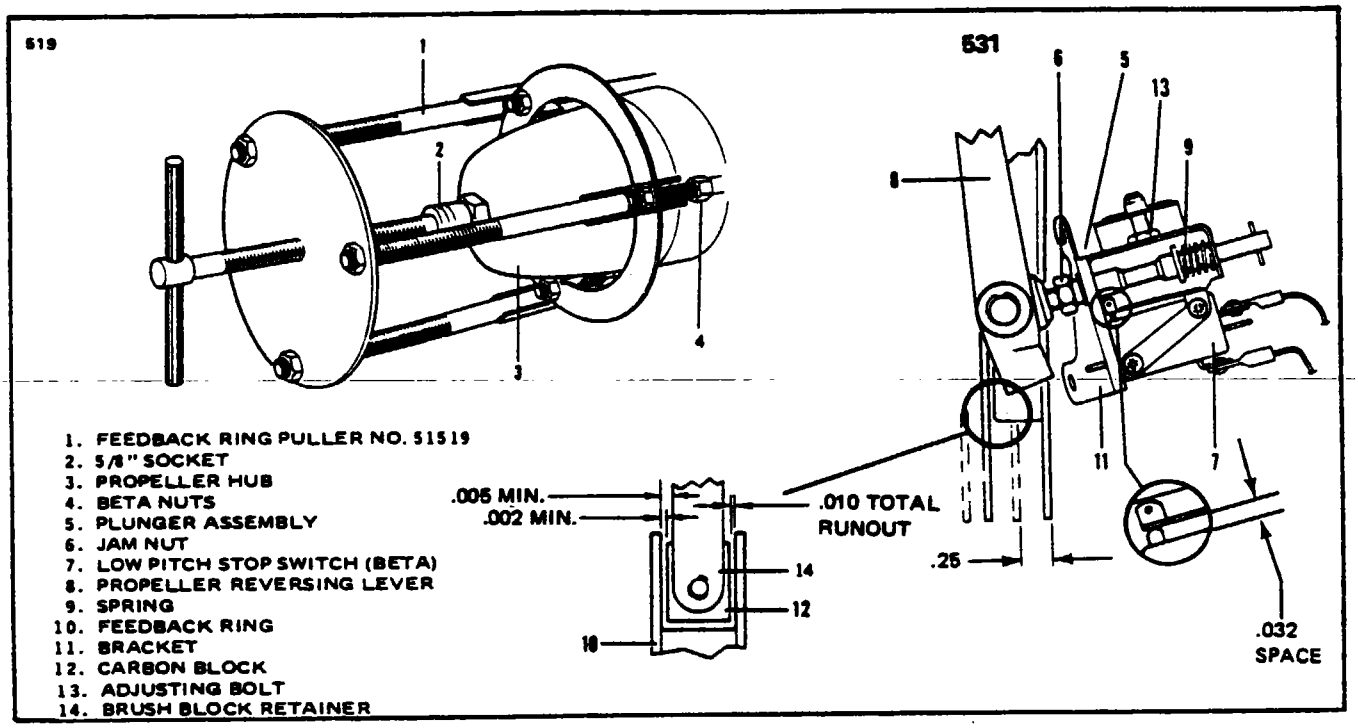

Figure 8-9. Low Pitch Stop Switch Adjustment

8-55. PRE-RUN RIGGING AND ADJUSTMENT OF POWER CONTROL (AIRFRAME TO ENGINE INTERCONNECT). (Refer to Figure 8-8.)

a. Rig and adjust all engine controls as per Paragraph 8-37 through 8-52 of this section.

b. Before the engine is started and running adjustments are attempted, engine instrumentation should be calibrated. This includes the torquemeter, the ITT gauge, the propeller, and gas generator tachometer gauges, and the fuel flow gauges. This instrumentation should be checked for accuracy as all running adjustments are made by matching of engine instrument reading.

8-56. ENGINE DEPRESERVATION. After completion of a new engine installation and before the first engine start, the following procedure should be followed to clear the engine:

a. Fill the engine oil tank with the recommended oil. (Refer to the latest revision of Pratt and Whitney Aircraft of Canada Ltd. Service Bulletin No. 1001 for the PA-31T and for the PA-31T1, Service Bulletin No. 12001.)

NOTE

When filling the oil tank, it is recommended that the oil be strained before entering the engine to eliminate the possibility of foreign material in the engine.

b. Motor the engine to circulate the oil.

c. Recheck the oil level and refill as necessary. Normal oil level is one U.S. quart below the maximum level mark.

d. Disconnect number one and two fuel manifolds at base of nozzle ring. Attach a short piece of hose to permit fuel to drain into a container.

e. Set start control to run; ignition switch OFF; fuel pump on and fuel shutoff valve on. Insure ignition micro switch on condition lever opens before fuel-flow indication.

CAUTION

Do not exceed starter time limits (30 seconds ON, 1 minute OFF, 30 seconds ON, 1 minute OFF, 30 seconds ON, 30 minutes OFF).

f. Motor engine until clean fuel is draining from number one manifold.

NOTE

Check for proper operation of oil pressure, fuel flow, fuel pressure, and Ng percent indicator moves in the proper direction during initial motoring run.

g. Remove hose from number one manifold and plug line with a suitable plug.
h. Repeat Step f for number two fuel manifold.
i. Remove plugs and reconnect manifolds and safety.

8-57. ENGINE MOTORING RUN. An engine motoring run is used to clear the engine of trapped fuel or vapors after an unsatisfactory start and to check for fuel system leaks after component replacement.

a. Set the power control lever at IDLE.
b. Set the starting control lever at CUTOFF.
c. Master switch ON (to supply electrical power to starter).
d. Fuel shutoff valve ON.
e. Fuel boost pump switch ON (to provide lubrication for engine driven fuel pumping elements).
f. Leave ignition switch OFF.
g. Operate the starter for 10 seconds.

CAUTION

Do not exceed starter time limits (30 seconds ON, 1 minute OFF, 30 seconds ON, 1 minute OFF, 30 seconds ON, 30 minutes OFF).

h. Release engine starter switch.
i. Fuel boost pump switch OFF, after Ng has stopped.
j. Master switch OFF.

8-58. ENGINE GROUND CHECK AND SAFETY PRECAUTIONS.

a. Prior to ground testing the engines, the following safety precautions should be adhered to:
   1. Position the airplane into the wind.
   2. Set the parking brake and chock the wheels.

NOTE

The importance of placing chocks in front of the wheels cannot be overstressed. It is possible for the airplane to move with just the brakes applied when the power being applied exceeds 600 foot-pounds of torque.

3. Be certain a fire extinguisher is readily available.
4. Be certain the area around the airplane is free of loose objects.
5. Check that the engine intakes and exhausts are free from foreign objects.
6. Ascertain that the danger areas around the airplane are clear of personnel.

b. Ascertain the engine indicating systems are properly calibrated. (Refer to Paragraph 8-95.)

c. Install the lower cowl if not previously installed; remove the upper cowl if installed, and install the ground testing cowl P/N 51520 which is available through the Piper Service Department.

NOTE

Before attempting to start the engine, personnel should be checked out by a qualified pilot or other responsible person on the engine starting and shutdown procedures, and any other system functions which may be required to properly and safely operate the power plants. The use of the Pilot's Operating Manual for this information is required.

d. Start the engine and idle three to five minutes. Cycle the propeller while running. Check the inter-turbine temperature and torque gauges for proper operation.

e. Shutdown the engine and check the oil level. Refill if necessary to proper level (1 quart below the full mark).

f. Restart the engine.

g. Check the secondary low pitch stop operation as follows:

1. Move the power levers toward reverse until the low pitch "Beta" lights come on.
2. Push down and hold the lock pitch test switches while continuing to move the power levers toward reverse. The prop should not go into reverse, and the lights should blink.
3. Continue to move the power levers toward reverse until mechanical resistance is felt.

CAUTION

Do not force the power levers to full reverse, this could cause damage to the linkage.

4. When mechanical resistance is felt in the power levers, release the secondary low pitch switch. The props should go toward reverse (increase in prop RPM).

h. Check the overspeed governor operation as follows:

1. Set power levers at 1625 RPM.
2. Set propeller control to full increase RPM; the "Reverse Not Ready" lights out.
3. Push up the Hydraulic Topping Governor (HTG) switches and observe the drop in prop RPM. The drop should be approximately 50 RPM.
4. Release the switches; the prop RPM should increase to the original RPM.

8-59. ENGINE IDLE AND POWER ADJUSTMENTS. (Refer to Figures 8-8 and 8-10.) Engine adjustments must be performed after installation of an engine; however, each adjustment can be performed independently if a specific component or adjustment is to be checked. An example of an adjustment check sheet is provided to record data obtained during the adjustment procedure. (Refer to Chart 8-1 or Chart 8-2.) Before attempting any power adjustments, check to be certain the engine controls are properly rigged.

NOTE

Engine instrumentation must be correctly calibrated before attempting any adjustments.

NOTE

When performing power adjustments, the engines are to be run with no load applied. Disconnect and cap the air bleed tube at the rear fire seal, generators off, etc. Power checks must be carried out under low wind conditions with the aircraft facing into the wind.

CAUTION

Shutdown the engine if at any time inter-turbine temperature (T5) rises abnormally.

a. FORWARD GAS GENERATOR (Ng) PICKUP DEAD BAND. The forward pickup dead band is the amount of travel the power lever linkage moves before the gas generator speed starts to increase. The forward pickup must be matched on each power lever to provide matched power output from the engines. Adjust the forward dead band on the fuel control unit interconnect rod. (Refer to Figure 8-8.) Shortening the rod will decrease the amount of dead band.

b. 2000 RPM TORQUE SETTING. The 2000 rpm torque setting is adjusted using the low pitch stop adjuster on the engine. (Refer to Figure 8-8, Sketch D.) Adjust the 2000 rpm torque using the following procedure:

NOTE

It is not necessary to cap the bleed airline when checking the 2000 rpm torque setting.

1. Accurately record the stabilized outside air temperature in degrees Centigrade, and set the altimeter window to 29.92 and record the pressure altitude.
2. Start the engine and allow the instruments to stabilize.
3. With the propeller lever full forward, advance the power lever until 2000 rpm propeller speed is obtained.
4. Record the engine torque indicated on the torquemeter.
5. Shutdown the engine.
6. Refer to Chart 8-3 and read the desired engine torque for the prevailing ambient conditions.

7. Insure that the Beta valve slot is flush with the Beta valve capnut minor torque changes can be made by adjusting the low pitch stop adjuster as follows: (Refer to Figure 8-10.)

(a) Holding track point position on the cam control lever, insert tool P/N 51516 behind the cam on to the pin and hold the cam and tool in position with a small pair of vise grip pliers. Install vise grip pliers tight enough to hold the control cam from moving, but not tight enough to damage the cam. (Refer to Figure 8-8, Sketch C.)

(b) Temporarily secure the reset arm to one of the governor screws; then disconnect the propeller governor interconnect rod from the air bleed link (reset arm).

(c) Loosen the jam nut on the low pitch stop adjuster.

(d) Holding the adjuster slowly turn the barrel in or out to obtain the desired torque setting.

CAUTION

Turning the barrel out will increase torque and turning the barrel in will decrease the torque.

DO NOT turn the barrel more than two turns. (1/2 turn equals approximately 50 foot-pounds of torque.)

(e) Tighten the jam nut on the adjuster, remove any securing device used to hold the reset arm and reconnect the interconnect rod.

NOTE

It may be necessary to readjust the interconnect rod. Refer to Paragraph 8-49.

(f) To insure that no movement was transferred through the wire rope to the cambox, check the clevis pin fit with the cam at track point. The clevis pin must be a slip fit.

NOTE

The torque meter reading should be within 40 foot-pounds of the value obtained from chart. Right and left engines should be 20 foot-pounds of each other.

(g) Ascertain tht all holding devices are removed and that all areas are properly safety wired.

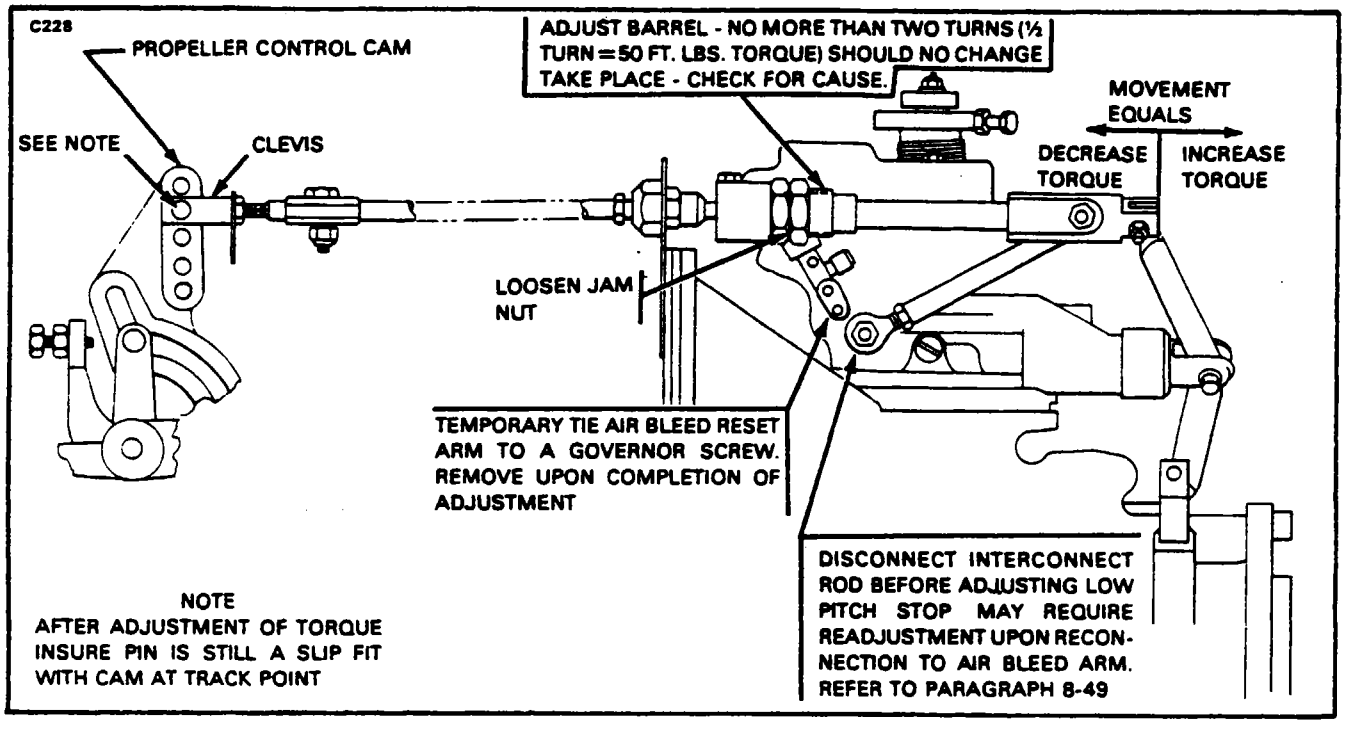

Figure 8-10. Minor Torque Adjustment

c. IDLE SPEED ADJUSTMENTS. The engine idle speed is controlled by two separate adjustments; minimum governing speed and minimum fuel flow. The minimum governing speed adjustment controls engine idle at pressure altitudes from sea level to approximately 3500 feet at which the fuel flow required to achieve 52% gas generator (Ng) idle is greater than the minimum fuel flow setting. At higher altitudes the minimum fuel flow setting will govern Ng idle speed.

CAUTION

The minimum fuel flow setting is NOT FIELD adjustable

NOTE

Do not attempt idle speed checks at pressure altitudes greater than 3,500 feet.

Adjust idle speed as follows:

1. Check to insure that the power lever linkage is adjusted per Paragraph 8-55.
2. Start the engine and let the oil temperature stabilize.
3. Set the propeller control lever to feather position.

4. If Ng is less than 52%, proceed as follows:
   (a) Adjust minimum governing speed adjuster with tool (P/N 51517) (refer to Figures 2-16 and 8-11, Sketch B & C) to obtain 52% Ng minimum. Turn adjuster clockwise to increase speed, or counterclockwise to decrease speed.

NOTE

The right engine with the air conditioning compressor may require setting idle speed to obtain 55% Ng with compressor not operating to compensate for accessory load when air conditioning system is on.

CAUTION

The minimum governing speed adjustment is extremely sensitive; turn the screw in small increments; 1/16 of a turn equals approximately 1% change in Ng speed.

d. POWER LEVER ALIGNMENT CHECK.

CAUTION

The wheels should be chocked and the parking brakes set when applying power in excess of 600 foot-pounds, as the aircraft could move.

1. Advance the power levers to 400, 600, 800 and 1,000 foot-pounds of torque and note the dimensions which the power levers are out of alignment.
2. Adjustment is made by repositioning the fuel control arm (refer to Figure 8-8, item 7) clockwise to advance a power lever or counterclockwise to retard a power lever. This adjustment may also require the readjustment of the fuel control unit interconnect rod (refer to Figure 8-8). Refer to Paragraph 8-44, Step "f" for adjustment of arm and Step "g" for adjustment of the interconnect rod.
3. Repeat Steps 1 and 2 as required to insure power lever alignment.

NOTE

If alignment of the power levers cannot be maintained throughout their complete travel, it is recommended that a new power lever arm (17) be used.

4. After the power levers are aligned, recheck the gas generator pickup and adjust with interconnect arm (9).
5. With engines shut down, move power levers full forward and insure gas generator stop is contacted. Power levers should remain aligned at this position. If gas generator stop cannot be contacted on one of the engines, the above adjustments must be made to the opposite power lever.

e. REVERSE GAS GENERATOR (Ng) PICKUP DEAD BAND. The reverse gas generator pickup dead band is the amount of travel the power lever arm moves before the cam follower pin contacts the fuel control unit reversing lever; at this point the gas generator speed starts to increase. Adjust the pickup dead band to approximately .31 of an inch. Gas generator pickup should occur when propeller rpm speed has dropped 150 rpm. These settings may require additional adjustment to insure gas generator speed on both engines picks up simultaneously in reverse.

f. REVERSE MAXIMUM POWER SETTING. The reverse maximum power setting is limited to 200 shp (shaft horsepower) to achieve the correct reverse power setting, proceed as follows:

1. Start the engine and allow the instruments to stabilize.

CAUTION

Do not select reverse power with the engine static; as damage will be done to the linkage.

2. Move the power levers into the reverse position and record the torque (Q) and propeller speed (Np).
3. Move the power levers to the idle position.
4. To determine the reverse horsepower, use the following equation: Q x Np x 0.00019. This equation will give the reverse power for the prevailing ambient conditions.
5. If necessary, adjust the reverse stop on the power lever linkage. (Refer to Figure 8-8, Sketch A.) An increase in gap is equal to an increase in engine power. One flat on the reverse power stop equals a 25 foot-pound increase in torque. For nominal setting, refer to Figure 8-8, Sketch A dimension B.
6. Secure the jam nut on the reverse stop after the adjustment is complete.

g. MAXIMUM PROPELLER SPEED. The maximum propeller speed is 2200 rpm. Adjust the maximum propeller speed as follows:

1. Start the engine and allow the instruments to stabilize.
2. With the propeller lever full forward, advance the power lever to obtain 2200 propeller rpm.
3. If necessary, adjust the maximum propeller speed adjustment to obtain the desired 2200 rpm.

h. MAXIMUM GAS GENERATOR (Ng) SPEED. (PA-31T only.) Refer to the Part Power Trim Check Procedures, Paragraph 8-61.

i. PROP REVERSING ALIGNMENT CHECK.

1. With the engines running, slowly move the power levers toward reverse and note that the propellers move into Beta together (RPM increase).
2. Matching is determined by carefully rechecking and adjusting the Beta valve. (Refer to Paragraph 8-55.)

j. MAXIMUM GAS GENERATOR (Ng) SPEED. (PA-31T1 only). The maximum governing speed stop is preset on all fuel control units. The units should not be adjusted in the field.

533

SKETCH A

1 GOVERNOR MAX SPEED ADJUSTMENT
2. PNEUMATIC MAX STOP (NOT FOR FIELD ADJUSTMENT)
3. PNEUMATIC MIN ECCENTRIC ADJUSTMENT
4 AIR BLEED LINK (RESET ARM)
5 FEATHERING ADJUSTER

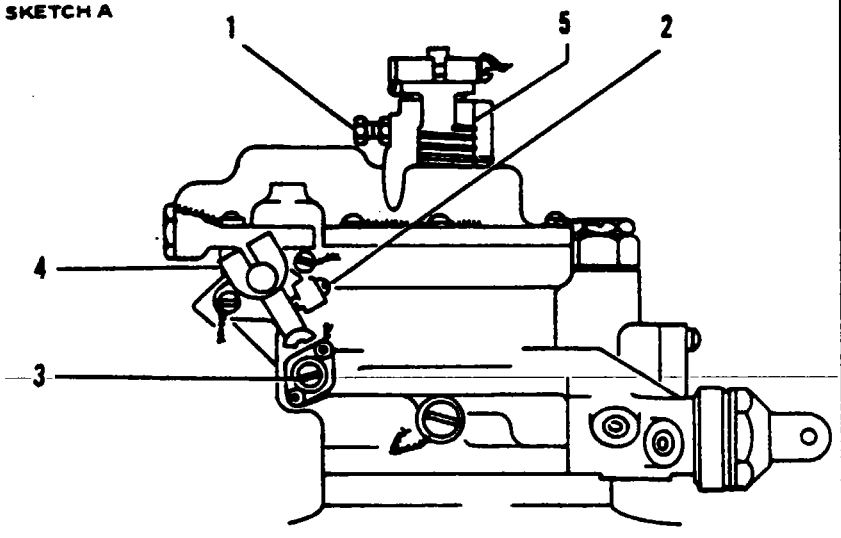

PROPELLER GOVERNOR

SKETCH B PA-31T only

1 IDLE SPEED SET (MIN Ng GOVERNING SPEED) (TOOL P/N 51517)
2 ACCELERATION ADJUSTMENT
3 MIN FLOW ADJUSTMENT (NOT FIELD ADJUSTABLE)
4 PART POWER TRIM STOP
5 MAX Ng SPEED ADJUSTMENT
6 METERING SLEEVE

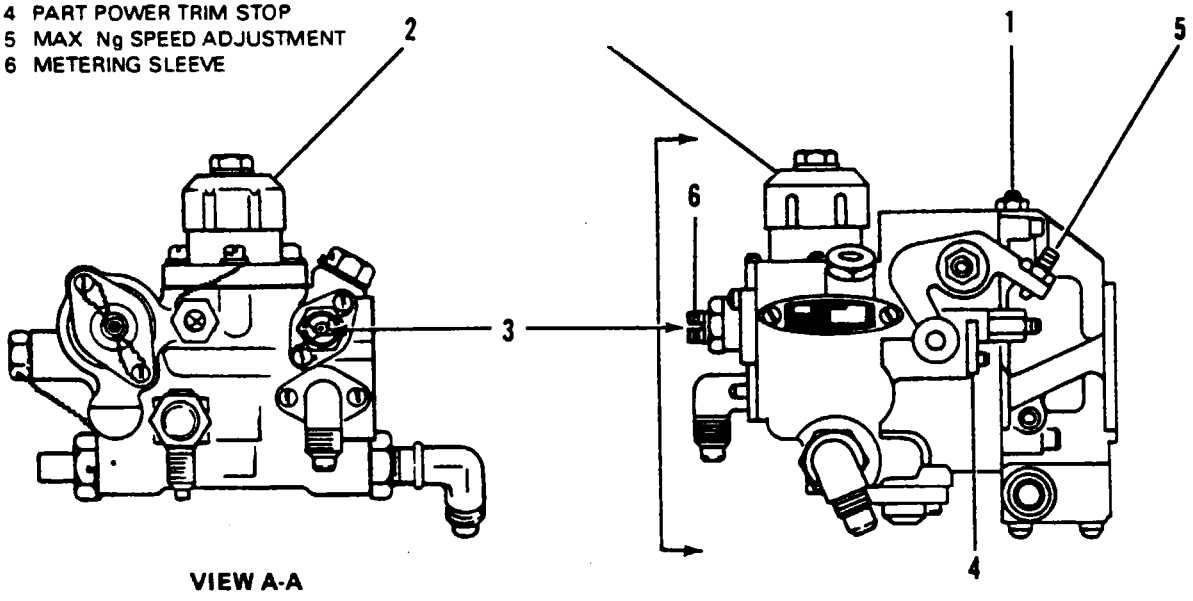

VIEW A-A

FUEL CONTROL UNIT

Figure 8-11. Running Adjustment Settings

SKETCH C PA-31T1 only

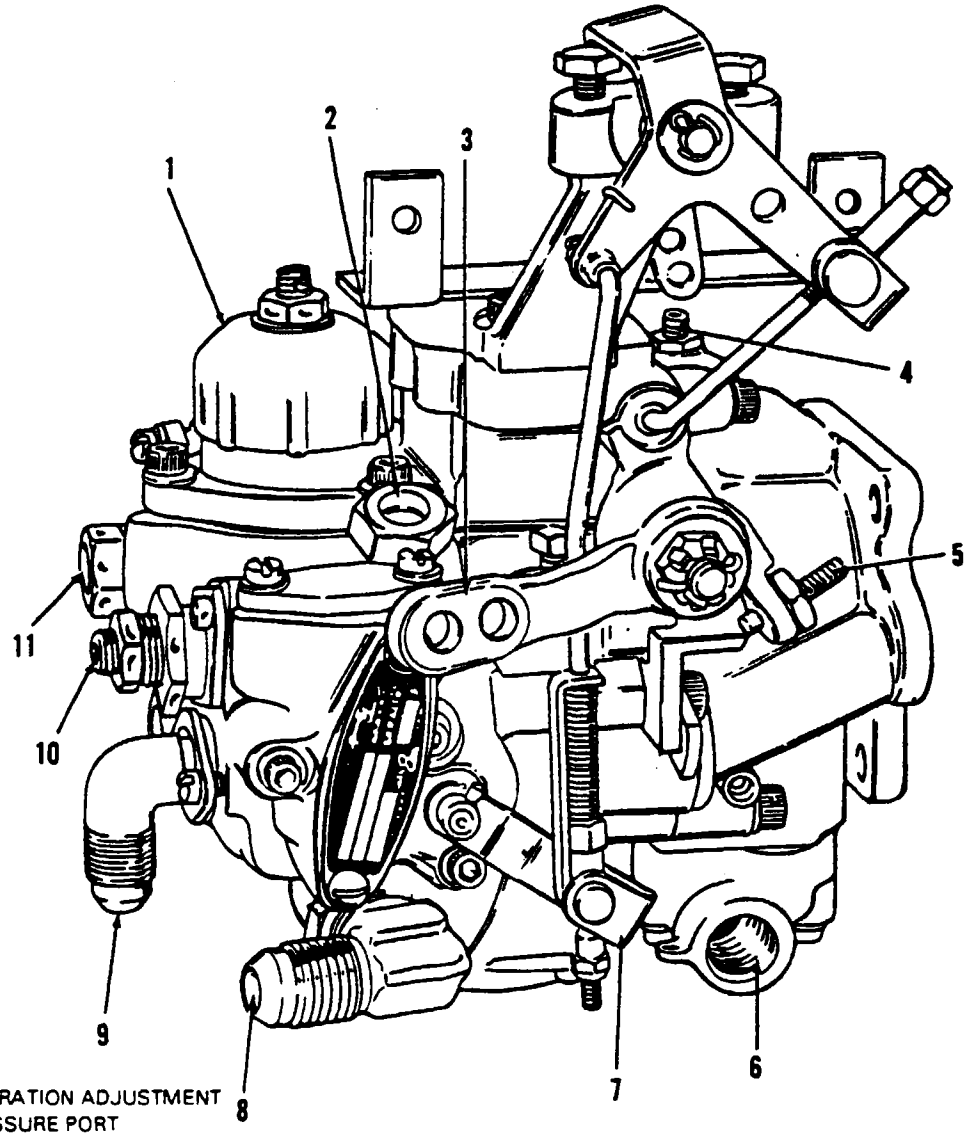

1 ACCELERATION ADJUSTMENT
2 P1 PRESSURE PORT
3 THROTTLE LEVER
4 IDLE SPEED ADJUSTING SCREW (TOOL P/N 51517)
5 MAXIMUM SPEED ADJUSTMENT
6 Px PRESSURE PORT
7 CUTOFF LEVER
8 FUEL INLET
9 FUEL OUTLET
10 METERING VALVE MINIMUM FLOW STOP (NOT FOR FIELD ADJUSTMENT)
11 P2 PRESSURE PORT

Figure 8-11. Running Adjustments Settings cont.

8-60. ENGINE GROUND TESTING. Ground testing procedures must be carried out periodically to determine any changes in engine performance and detect any mechanical deterioration of the engine. All forms of engine deterioration are accompanied by an increase in inter-turbine temperature and fuel flow at a given power. Compressor deterioration is usually due to dirt deposits and causes an increase in gas generator speed at a given power setting. This form of deterioration can be remedied by a compressor wash. Refer to Table VIII-II for appropriate Pratt and Whitney Engine Maintenance Manual. Hot section deterioration will cause a decrease in gas generator speed at a given power setting.

NOTE

Engine ground testing must be performed with no load applied (bleed air capped off, generators off, etc.), and under low wind conditions with the aircraft facing into the wind.

NOTE

Engine instrumentation must be correctly calibrated before attempting any power checks.

8-61. PART POWER TRIM CHECK. (PA-31T only) (Refer to Figure 8-11.) Fuel control units are calibrated to insure maximum power. The part power trim stop must be adjusted to insure maximum power on a 21° C (71° F) day. If engine inlet temperature is other than this, it will not be possible to set the maximum Ng speed stop without first reaching either an inter-turbine temperature or a torque limit. To overcome this, the part power trim stop is provided. The stop is a movable spacer placed between gas generator maximum speed (Ng) stop and power lever anvil and represents a 1700 rpm (Ng) speed decrease. The part power trim stop is permanently attached to the fuel control unit and is used only for engine trimming. Adjust the maximum Ng speed as follows:

a. Loosen the screw securing the part power trim stop and rotate the stop into position so as to limit the power control lever travel.

b. Disconnect and cap the air bleed tube at the rear fire seal. Do not allow any leakage.

c. Start the engine and allow it to stabilize with no load applied to the engine (generators off, bleed airline capped off, etc.)

d. Advance the power lever until the part power trim stop is contacted and allow the engine to stabilize at this setting with the propeller control forward.

CAUTION

If ambient temperatures are excessively high, it will be impossible to perform this adjustment without reaching a temperature limit. Do not exceed the maximum inter-turbine temperature limit (750°C) and torque limit (1628 foot-pounds at 2000 RPM).

e. Check the gas generator (Ng) speed and, if required, adjust the gas generator maximum speed adjustment to obtain 97.1% gas generator speed. 1/2 turn = approximately 1% change.

CAUTION

GAS GENERATOR SPEED MUST NOT EXCEED 97.1% DURING CHECK AND ADJUSTMENT AND INTER-TURBINE TEMPERATURE MUST NOT EXCEED THE MAXIMUM LIMIT (750°C).

f. Shutdown the engine.

g. Stow and lockwire the part power trim stop and lockwire the gas generator maximum speed adjustment.

h. Conduct a flight to an altitude of 15,000 feet. At some point, obtain a full throttle setting without exceeding torque or temperature limits. Observe that the maximum Ng speed never exceeds 101%, but does reach a minimum of 100%. If the Ng does not reach 100%; then readjust set screw on the ground but DO NOT run up engine on ground. Re-fly the aircraft to obtain a minimum of 100% Ng.

i. If flight test shows Ng above 101%, then readjust set screw on ground to a lower setting and re-fly aircraft as stated in Step h.

CAUTION

Never exceed 101.5%.

8-62. ENGINE PERFORMANCE AND DATA PLATE SPEED CHECK. (PA-31T only.) The data plate trim speed is gas generator speed recorded and stamped on each engine data plate from the engine final acceptance test. The engine performance and data plate speed check curve (refer to Charts 8-4 thru 8-8) are used to determine the desired engine performance parameters. Determine the engine performance as follows:

a. Obtain and record the outside air temperature at the engine with the engine operating, and set the altimeter window to 29.92 and record the pressure altitude.

b. Obtain reference rpm stamped on the engine data plate.

c. Refer to Charts 8-4 thru 8-8, and from the appropriate graph read and record torque, fuel flow, gas generator speed/data plate speed ratio and inter-turbine temperature for the prevailing ambient conditions.

d. With these values established, proceed with engine performance check.

NOTE

This check must be carried out with zero power extraction (bleed air capped off, generators off, etc).

e. Disconnect the air bleed tube at the rear fire seal and cap the line. Do not allow any leakage.

f. Start the engine and allow it to stabilize.

g. Set propeller control lever to give 2000 rpm with power lever set to give torque setting previously determined from the engine performance curve. Allow the instruments to stablize at this setting.

h. Compare observed fuel flow, gas generator speed, and inter-turbine temperature with values previously recorded. Determine the actual gas generator speed/data plate speed ratio as shown on Chart 8-8. The values observed must be within the following limits:

1. Fuel flow - ± 15 lb/hr
2. Gas generator speed/data plate speed - ± 0.02
3. Maximum inter-turbine temperature not exceeded.

If temperature is more than 75° C below target temperature, check instrumentation.

i. If engine performance deviates from the preceding limits, refer to Table VIII-II for appropriate Pratt and Whitney Engine Maintenance Manual.

NOTE

The importance of monitoring the performance of an engine throughout its history cannot be overemphasized. The Aircraft Gas Turbine Operation Information Letter #18 has been devised by Pratt and Whitney Aircraft of Canada Ltd., and should be consulted to aid in monitoring the engine performance trend. (Refer to the latest revision.)

8-63. ENGINE OVERTEMPERATURE AND OVERTORQUE LIMITS. For overtemperature or overtorque limits and the necessary inspection procedures and corrective action, refer to Table VIII-II for appropriate Pratt and Whitney Engine Maintenance Manual.

8-63a. ENGINE GROUND PERFORMANCE CHECK. (PA-31T1 Only.) Engine performance checking curves enables engine performance to be checked, on the ground, over a wide range of ambient temperatures without overtorquing or overtemperaturing the engine. Charts 8-9 thru 8-12 are used to determine the desired engine performance parameters. Determine the engine performance as follows:

NOTE

Engine instruments should be recently calibrated.

a. Obtain and record the ambient air temperature. Set the altimeter window to 29.92 and record the pressure altitude.

b. Refer to Charts 8-9 thru 8-12, and from the appropriate graph read and record torque, fuel flow, gas generator speed and inter-turbine temperature for the prevailing ambient conditions.

c. With these values established, proceed with engine performance check.

NOTE

This check must be carried out with generators off, but do not disconnect bleed air.

d. Start the engine and run at idle rpm for 5 minutes to allow temperatures to stabilize.

e. Set propeller control lever to give 2200 rpm with power lever set to give torque setting previously determined from the engine performance curve. Allow the instruments to stabilize at this setting.

f. Record and compare observed fuel flow, gas generator speed, and inter-turbine temperature with values previously recorded. The values observed must be within the following limits:

1. Fuel flow - do not exceed.
2. Gas generator speed - do not exceed.
3. Maximum inter-turbine temperature not exceeded.

If temperature is more than 75°C below target temperature, check instrumentation.

NOTE

It is normal for the fuel flow, ITT and Ng to be below the chart value, but should not exceed it.

g. If engine performance deviates from the preceding limits, refer to Table VIII-II for appropriate Pratt and Whitney Engine Maintenance Manual.

NOTE

The importance of monitoring the performance of an engine throughout its history cannot be overemphasized. The Aircraft Gas Turbine Operation Information Letter #18 has been devised by Pratt and Whitney Aircraft of Canada Ltd., and should be consulted to aid in monitoring the engine performance trend. (Refer to the latest revision.)

GROUND ADJUSTMENT CHECK SHEET
PIPER CHEYENNE

NOMINAL SETTINGS	AIRCRAFT NUMBER
IDLE (Ng) - 52% MIN. IDLE ITT - 660°C MAX. OIL PRESSURE - 40 PSI MIN. (IDLE) 80 TO 100 PSI (TAKEOFF) OIL TEMP. - 0°C to 99°C FUEL PRESSURE - 15 to 35 psi MAX. PROPELLER SPEED - 2200 RPM REVERSE MAX. POWER - 200 HP MAX. GAS GENERATOR SPEED - 97.1% (PART POWER TRIM STOP CONTACTED.)	ENGINE NUMBERS L. R. MECHANIC DATE AMBIENT CONDITIONS PRESSURE ALTITUDE _____ FT OUTSIDE AIR TEMP. _____ °C

ADJUSTMENT SETTINGS	LEFT ENGINE	RIGHT ENGINE
FORWARD DEAD BAND	_____ IN.	_____ IN.
2000 RPM TORQUE SETTING	_____ FT-LB	_____ FT-LB
ITT	_____ °C	_____ °C
IDLE SPEED (Ng)	_____ %	_____ %
REVERSE DEAD BAND	_____ IN.	_____ IN.
REVERSE MAXIMUM POWER	_____ RPM _____ % _____ FT-LB	_____ RPM _____ % _____ FT-LB
MAXIMUM PROPELLER SPEED	_____ RPM	_____ RPM

PART POWER TRIM CHECK	LEFT (1) ENGINE	RIGHT (1) ENGINE
TORQUE	_____ FT-LB	_____ FT-LB
Ng	_____ %	_____ %
ITT	_____ °C	_____ °C
DATA PLATE SPEED CHECK		
TORQUE _____ FT-LB (2)	_____ FT-LB	_____ FT-LB
FUEL FLOW ____ LBS/HR (2)	_____ LBS/HR	_____ LBS/HR
Ng/DPS _____ (2)	_____	_____
ITT _____ °C (2)	_____ °C	_____ °C

NOTES
1. INDICATED INSTRUMENT READINGS
2. APPLICABLE CURVE READINGS

REMARKS:

Chart 8-1. Ground Adjustment Check Sheet (PA-31T)

GROUND ADJUSTMENT CHECK SHEET
PIPER CHEYENNE

NOMINAL SETTINGS	AIRCRAFT NUMBER
IDLE (Ng) - 52% MIN. IDLE ITT - 660°C MAX. OIL PRESSURE - 40 PSI MIN. (IDLE) 80 TO 100 PSI (TAKEOFF) OIL TEMP - 0°C to 99°C FUEL PRESSURE - 15 to 35 psi MAX. PROPELLER SPEED - 2200 RPM REVERSE MAX POWER - 200 HP	ENGINE NUMBERS L. R MECHANIC DATE AMBIENT CONDITIONS PRESSURE ALTITUDE _____ FT OUTSIDE AIR TEMP. _____ °C

ADJUSTMENT SETTINGS	LEFT ENGINE	RIGHT ENGINE
FORWARD DEAD BAND	_____ IN.	_____ IN.
2000 RPM TORQUE SETTING	_____ FT-LB	_____ FT-LB
ITT	_____ °C	_____ °C
IDLE SPEED (Ng)	_____ %	_____ %
REVERSE DEAD BAND	_____ IN.	_____ IN.
REVERSE MAXIMUM POWER	_____ RPM _____ % _____ FT-LB	_____ RPM _____ % _____ FT-LB
MAXIMUM PROPELLER SPEED	_____ RPM	_____ RPM

Engine Ground Performance Check 2200 RPM			
TORQUE	_____ FT-LB (2)	_____ FT-LB	_____ FT-LB
FUEL FLOW	____ LBS/HR (2)	____ LBS/HR	____ LBS/HR
Ng	_____ % (2)	_____ %	_____ %
ITT	_____ °C (2)	_____ °C	_____ °C

NOTES
1. INDICATED INSTRUMENT READINGS
2. APPLICABLE CURVE READINGS

REMARKS:

Chart 8-2. Ground Adjustment Check Sheet (PA-31T1)

534

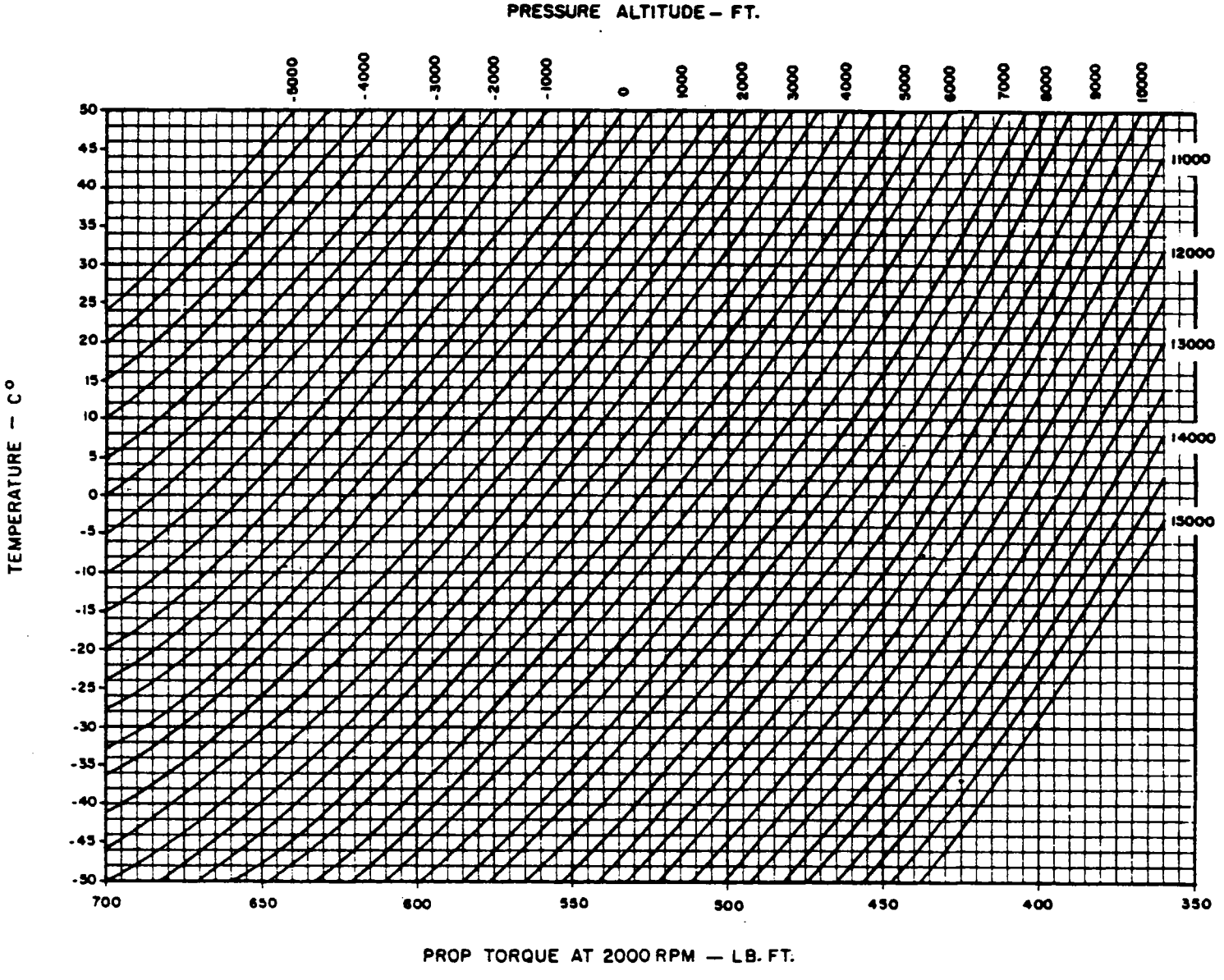

Chart 8-3. 2000 RPM Torque Curve

836

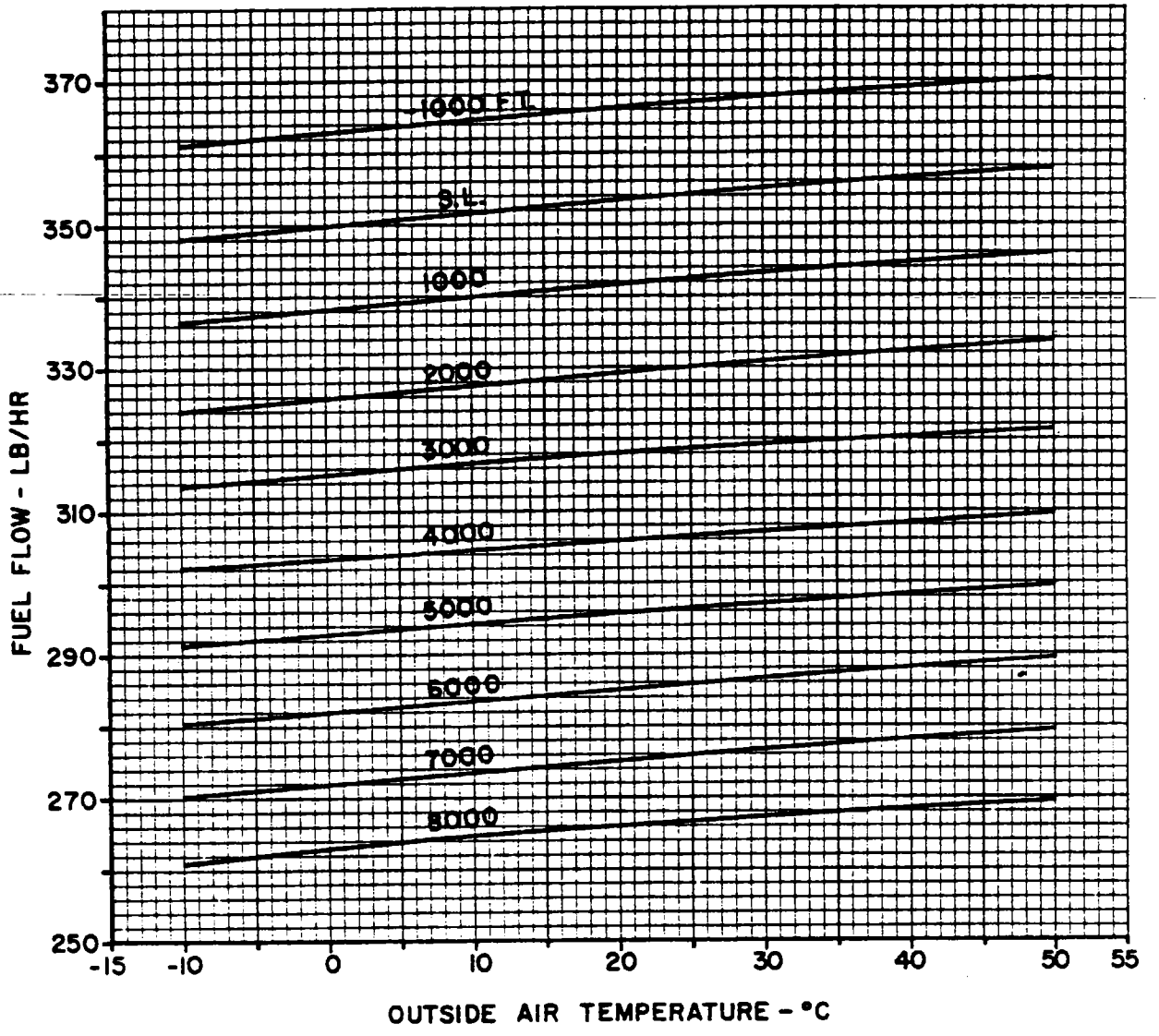

Chart 8-4. Fuel Flow (PA-31T Only)

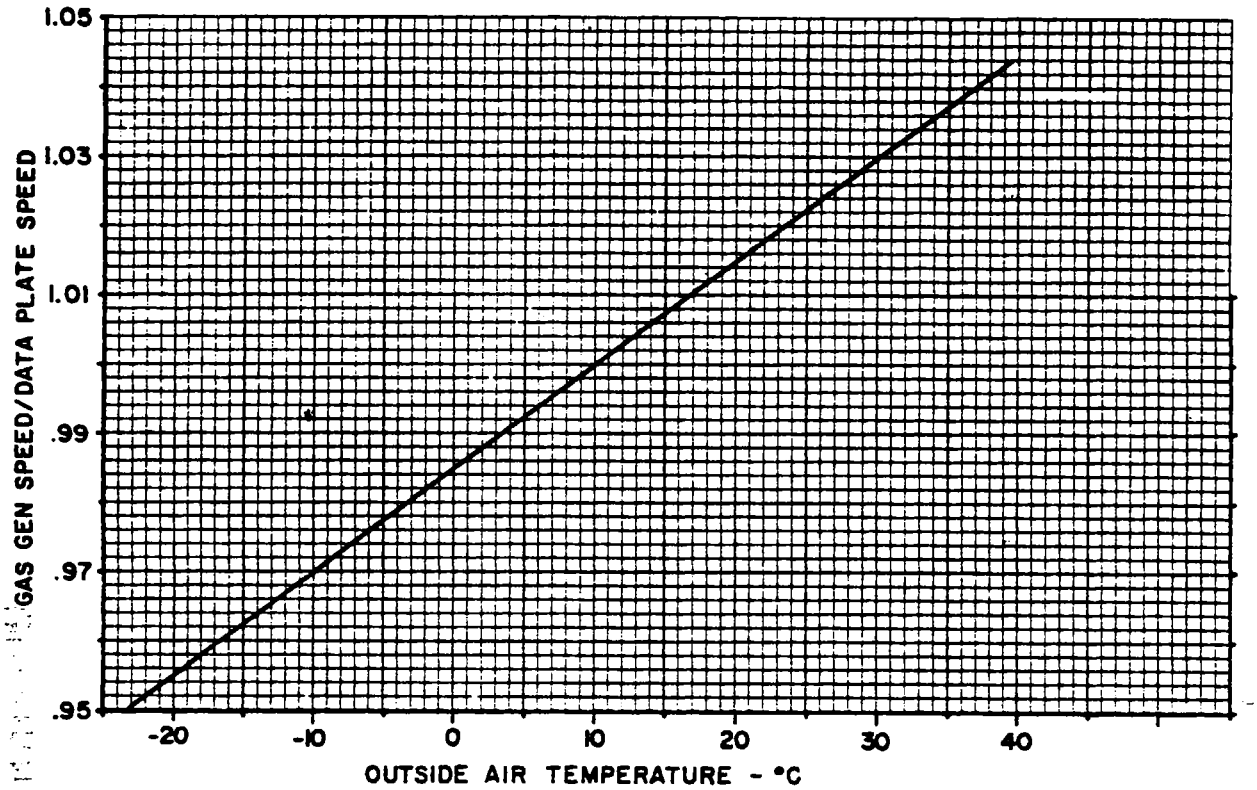

Chart 8-5. Gas Generator Speed/Data Plate Speed (PA-31T Only)

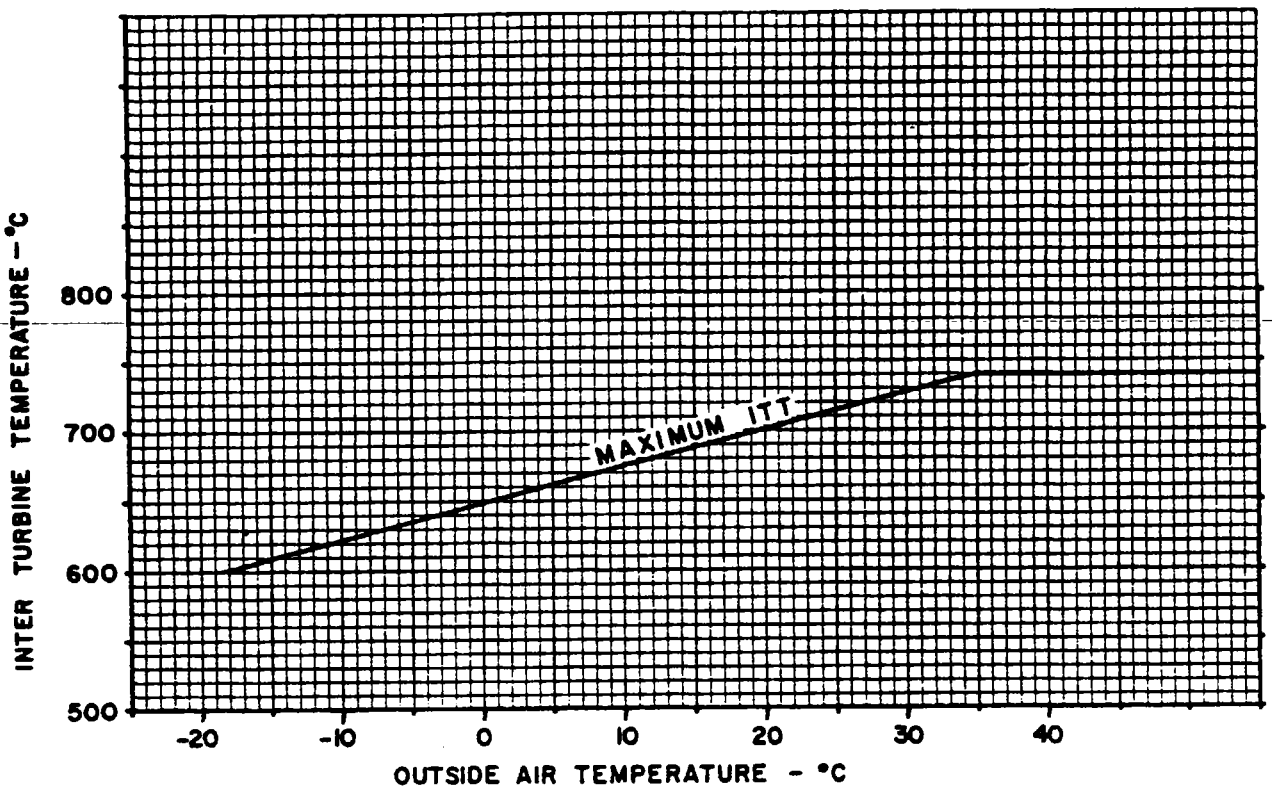

Chart 8-6. Inter-Turbine Temperature (PA-31T Only)

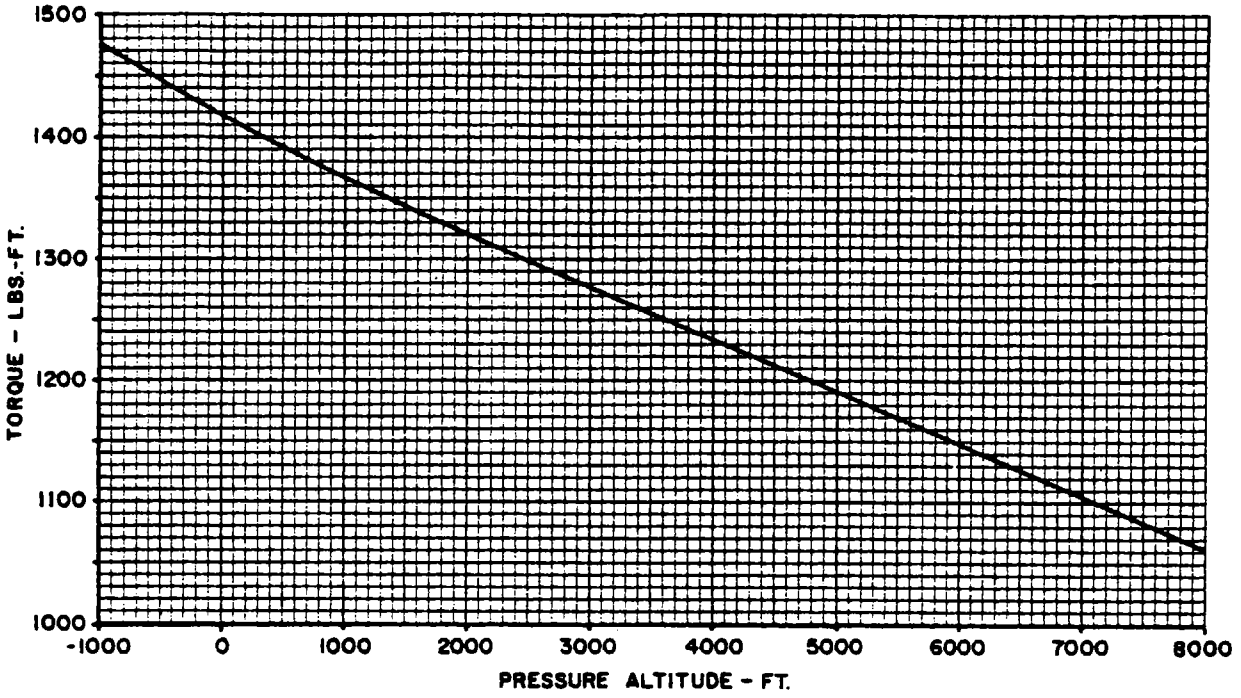

Chart 8-7. Torque (PA-31T Only)

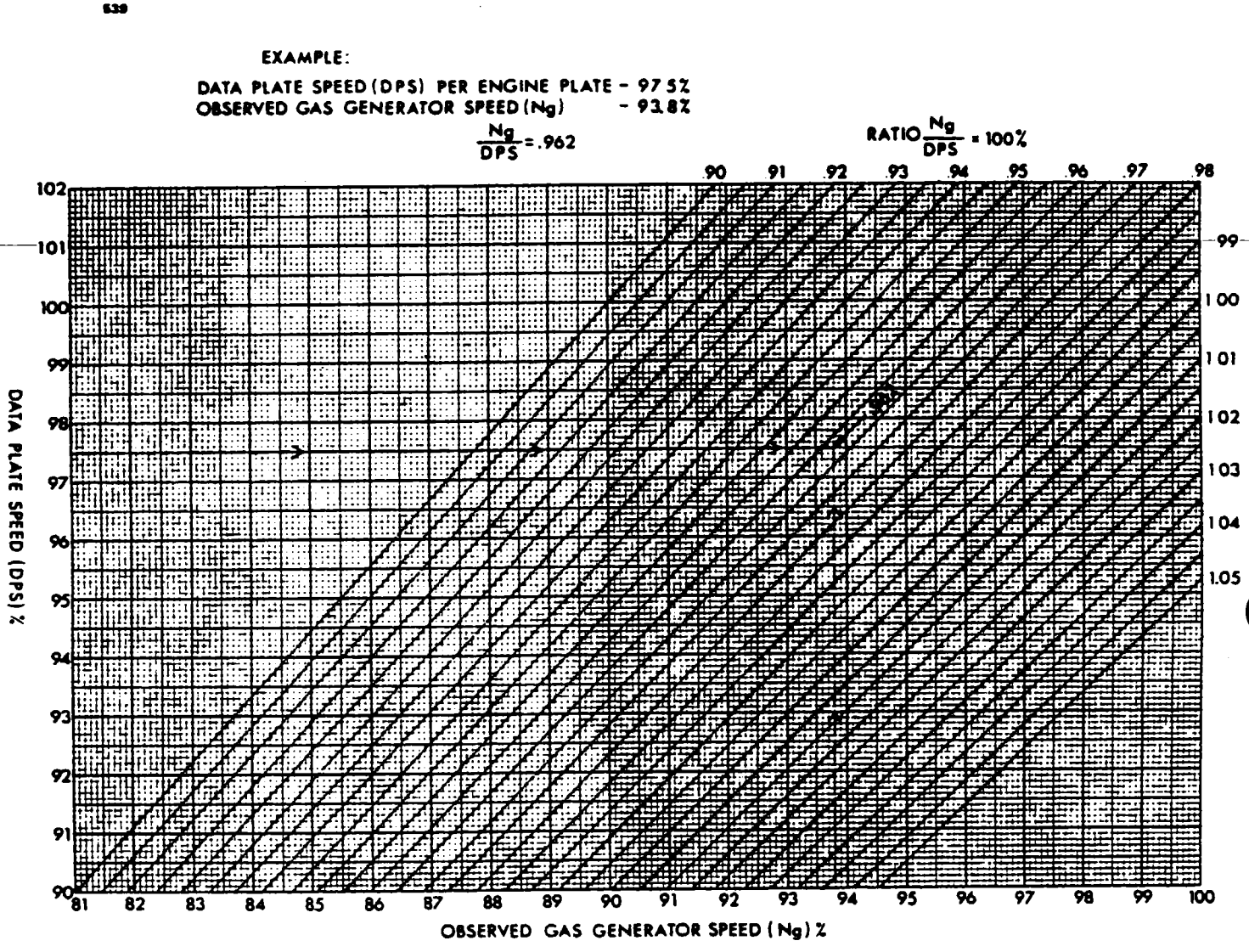

Chart 8-8. Data Plate Speed Ratio Curve (PA-31T Only)

3233
3232

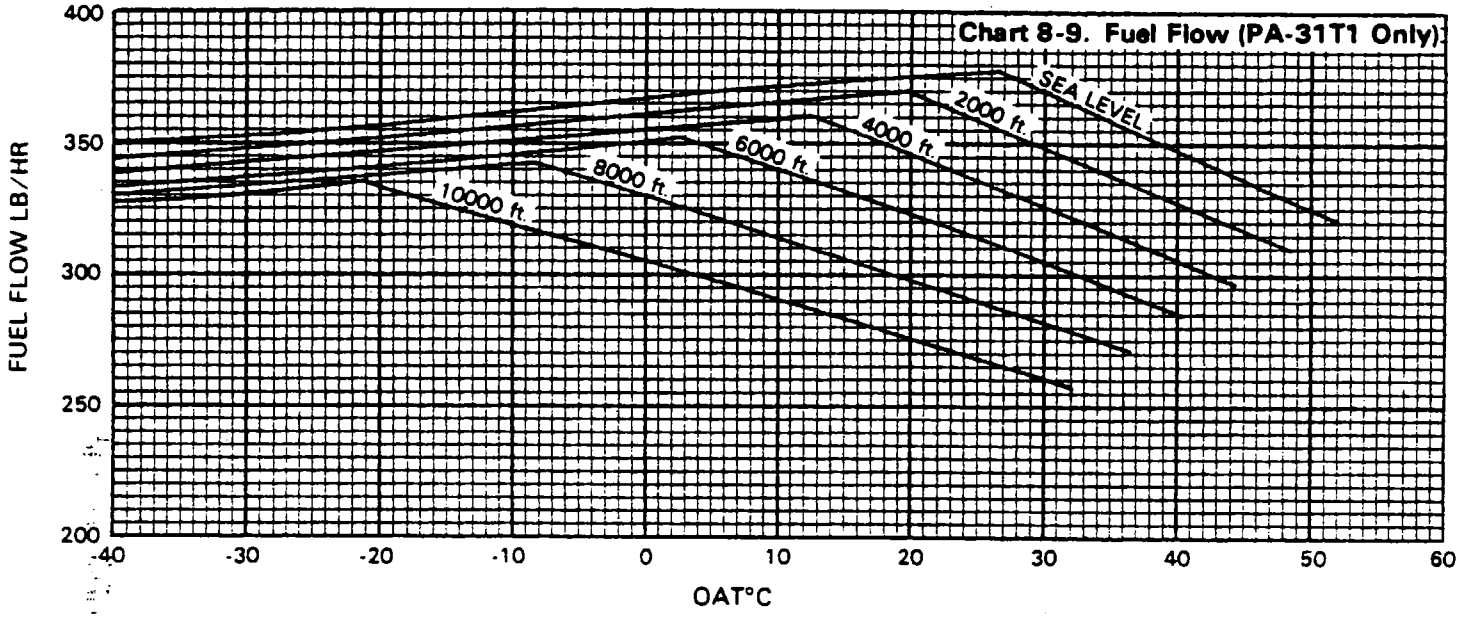

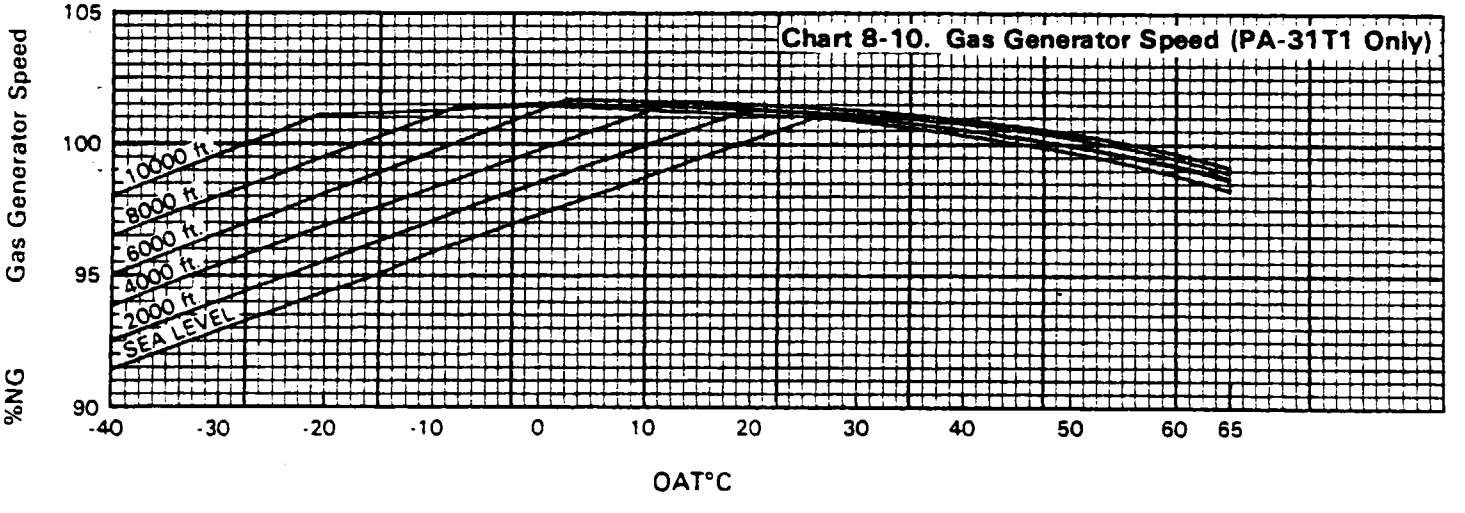

Added: 2/15/82

3234
3231

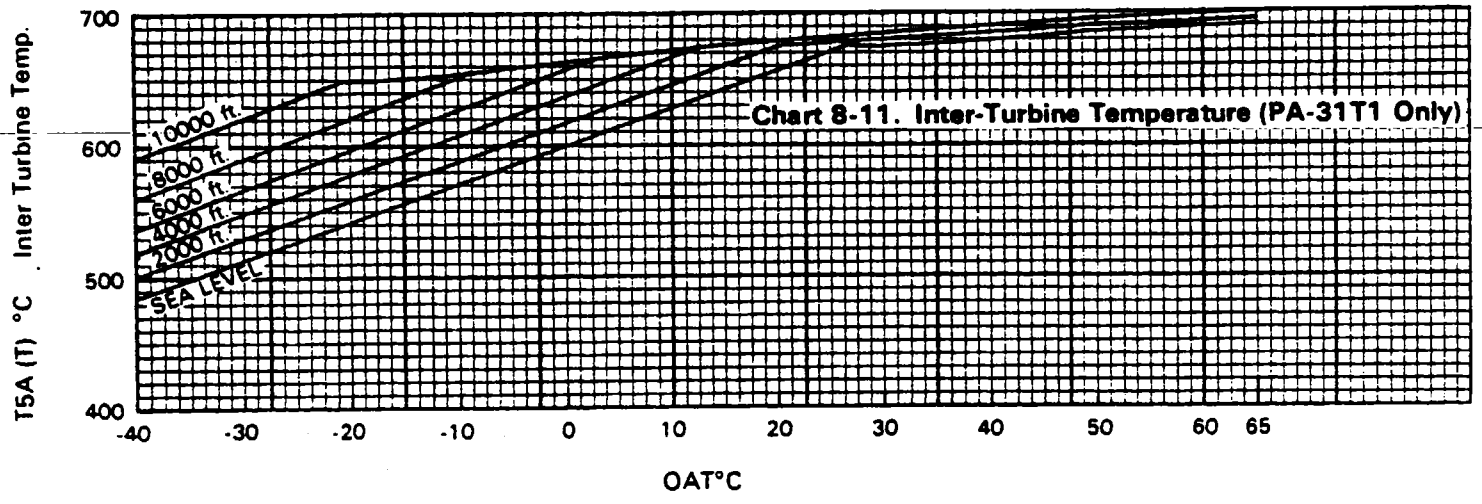

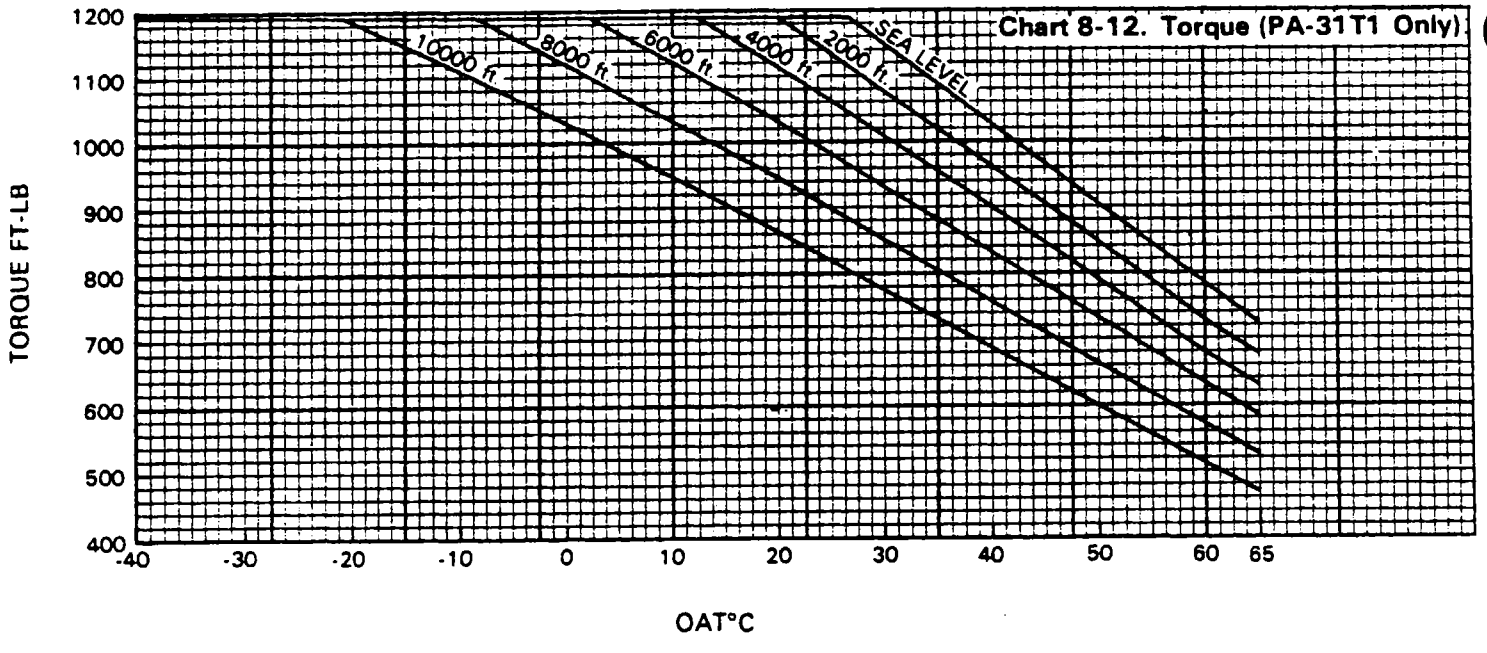

Added: 2/15/82

8-64. ENGINE SHOCK MOUNTS.

NOTE

Refer to the latest revision to Lord Bulletin No. SM-6304 for all detailed information concerning cleaning, inspection, checking, disassembly and assembly instructions.
Lord Aerospace Products
1635 West 12th Street
Erie, Pennsylvania 16514

8-64a. INSPECTION OF MOUNT ASSEMBLIES. Mounting assemblies of the LM-423, LM-423R and LM-4235 are to be visually inspected at each regularly scheduled inspection of the aircrafts engines, at each engine overhaul and at every 300 hours maximum. Inspect these mounting assemblies in their installed state by the following procedure:

a. Visually inspect all metal parts for cracks and excessive nicks, scratches or gouges.
b. Inspect all bolts, cotter pins and lockwires. Tighten and/or replace as required.
c. Inspect bonded sandwich mountings for metal-to-rubber bond separation or flex cracks.
d. Repair or replace any of the above components as required.

8-64b. CLEANING MOUNT ASSEMBLIES.

CAUTION

DO NOT use cleaning solvents on bonded rubber parts.

Using a clean, dry cloth, wipe oil and dirt from the bonded rubber parts. Wash unbonded parts in dry cleaning solvent, federal specification number PS-661 or equivalent.

8-65. REPLACEMENT OF SHOCK MOUNTS. (Refer to Figure 8-6.) The engine shock mounts may be replaced as follows:

a. Remove the engine cowling.
b. Attach a sling to the engine lift points and using a one-half ton hoist relieve the tension on the mounts.
c. Remove the nut, washer, and bolt that attaches the mounting pad to the tubular engine mount.
d. Remove the safety wire from the mounting pad special bolts; remove the bolts and withdraw the mount assembly.
e. Install the mount assembly in reverse order of removal. Torque the pad mounting special bolts to 225 to 300 inch-pounds and safety with MS20995-C41 safety wire.
f Torque the mount bolt to 450-500 in.-lbs. (Refer to Figure 8-6, Section B-B.).

8-66. ENGINE FIRE SEALS.

8-67. GENERAL. The engine fire seals are bolted to the engine fire seal flange forward and aft of the engine compressor intake. The fire seals are constructed of semicircular sections and are designed to form a fire seal between the engine and cowling. The fire seals also provide a mounting location and support for lines, wire, and cables routed from the fire wall to the engine front accessories.

8-68. ENGINE FUEL SYSTEM.

8-69. GENERAL. The fuel control system consists of a single engine driven pump, a fuel control unit, start control, and a dual fuel manifold with seven nozzles per manifold. An automatic fuel dump valve and two combustion chamber drain valves are provided to insure drainage of residual fuel after engine shutdown. A scavenger pump system collects residual fuel after engine shutdown and injects the fuel into the aircraft fuel tank during engine start. Refer to Table VIII-II for appropriate Pratt and Whitney Engine Maintenance Manual for detailed information regarding removal, installation, and inspections to the various engine fuel system components not covered in this manual.

8-70. FUEL CONTROL UNIT.

8-71. REMOVAL OF FUEL CONTROL UNIT.

a. Move the fire wall fuel shutoff to the off position.
b. Remove the engine cowling per Paragraph 8-5.
c. Disconnect fuel inlet hose, outlet tube, pneumatic tubes, and fuel bypass tubes at the fuel control unit; cap all lines to prevent contamination. On the PA-31T1 only, also remove the control cable.
d. Disconnect the fuel control unit interconnect rod at the fuel control unit.
e. Remove mounting nuts and washers that secure fuel control unit to the fuel pump and withdraw fuel control unit.

8-72. PREPARATION FOR SHIPPING. Fuel control units taken out of service or being returned for overhaul should be preserved and packaged using the following procedure:

NOTE

Do not permit fuel or oil to enter the drive body cavity or any air pressure port.

a. Drain all residual fuel from the fuel section of the control and completely fill with clean oil conforming to Specification MIL-0-6081, Grade 1010. Tip the control as necessary to assure a complete film on all parts and passages in the fuel section.
b. After preservation is complete, drain the oil from the control and replace all caps and plugs previously removed.
c. When packaging the unit for shipping, be certain all shipping plugs and caps are secure. Place the unit in a moisture and vapor proof container or plastic bag and seal the bag. Pack the sealed unit in a shipping carton or case.

8-73. PREPARATION FOR SERVICE. Prepare the fuel control unit for service using the following procedure:

a. Inspect all lockwire and lockwire seals. Return the unit for recalibration if any lockwire seal indicates tampering or if the wire is broken.
b. Units which have fuel sections preserved with oil are to be flushed with fresh fuel conforming to Specification MIL-F-7024A, Type II, and permitted to stand filled with fuel for eight hours minimum before operation.

NOTE

Do not permit fuel or oil to enter the drive body cavity or any air pressure port. Do not attempt to replace any lockwire seal until the unit has been checked to be certain calibration or operation has not been affected.

8-74. INSTALLATION OF FUEL CONTROL UNIT.

CAUTION

If a replacement fuel control unit is to be installed, preservation oil must be removed. (Refer to Paragraph 8-73.)

a. Check to be certain that the fuel control unit drive coupling is properly installed in the fuel pump output drive. If coupling shaft was detached during control unit removal, reinstall by inserting male splined end in fuel pump and engaging pump output drive. Failure to install coupling will result in uncontrolled Ng increase.
b. Install new O-ring in recess of fuel pump mating face and install unit over studs. Insure coupling shaft is meshed properly. Secure unit with washers and self-locking nuts: torque 65 to 85 inch-pounds
c. Connect fuel inlet hose and torque coupling nut 170 to 200 inch-pounds and lockwire.
d. Connect fuel outlet tube, fuel bypass tube and pneumatic tubes to fuel control unit; torque coupling nuts 90 to 100 inch-pounds and lockwire.
e. Connect fuel control unit interconnect rod; torque nuts 24 to 36 inch-pounds and lock with cotter pin.
f. On the PA-31T1 only, connect the control cable removed.
g. Perform an engine motoring run per Paragraph 8-57 with starting control lever in run position.

8-75. FUEL CONTROL UNIT CHECKS AND ADJUSTMENTS. The following checks and adjustments must be performed after a fuel control unit has been replaced:

a. Idle speed setting (refer to Paragraph 8-59.)
b. Maximum Ng speed (refer to Paragraph 8-61). (PA-31T only.)
c. Fuel control pneumatic system (refer to Table VIII-II for appropriate Pratt and Whitney Engine Maintenance Manual.
d. Check the engine performance and data plate trim speed. (Refer to Paragraph 8-62.) (PA-31T only.)
e. Check engine ground performance. (Refer to Paragraph 8-63a.) (PA-31T1 only.)

8-76. FUEL CONTROL PNEUMATIC (P3) FILTER MAINTENANCE. The P3 filter is an inline type filter located in the Px line just aft of the rear fire seal. (Refer to Figure 8-6, Item 15.) The filter should be removed and inspected for contamination at 100-hour intervals and replaced if necessary. A new filter should be installed every 1000 hours. Do not attempt to clean this filter with solvent (refer to the latest revision of Pratt and Whitney Field Note #872 and Engine Maintenance Manual.)

8-77. FUEL MANIFOLD ADAPTER REMOVAL AND INSTALLATION. Before removing any adapters from the engine, each adapter should be marked, using a suitable marker (refer to Table VIII-II for appropriate Pratt and Whitney Engine Maintenance Manual) to insure returning the adapters to their original position on the engine. Positions should be numbered clockwise 1 to 14, looking from the rear of the engine with the number 1 position being at the 12 o'clock location. For complete removal, leakage test and installation of manifold adapters refer to Table VIII-II for appropriate Pratt and Whitney Engine Maintenance Manual.

8-77a. FUEL NOZZLE ADAPTER INSPECTION. (Refer to Figure 8-11a.) Each time the fuel nozzle adapter is removed or installed:

a. With the nozzle adapter and sheath pressed together by hand and the pin engaged, check the clearance between the adapter and sheath all around with a feeler gauge. Maximum gap is .003 inch. A larger gap suggests that one or the other part is distorted and should be replaced.

b. With the nozzle adapter and sheath assembled together, carefully check the clearance around the fuel nozzle tip with the side of the hole in the sheath, this clearance must not be less than .020 inch. The shank of a No. 76 drill (.020 dia.) may be used for this purpose. If the clearance is less than this value at any point or if the drill could not be passed completely around the nozzle tip, determine by substitution which is the distorted part and discard.

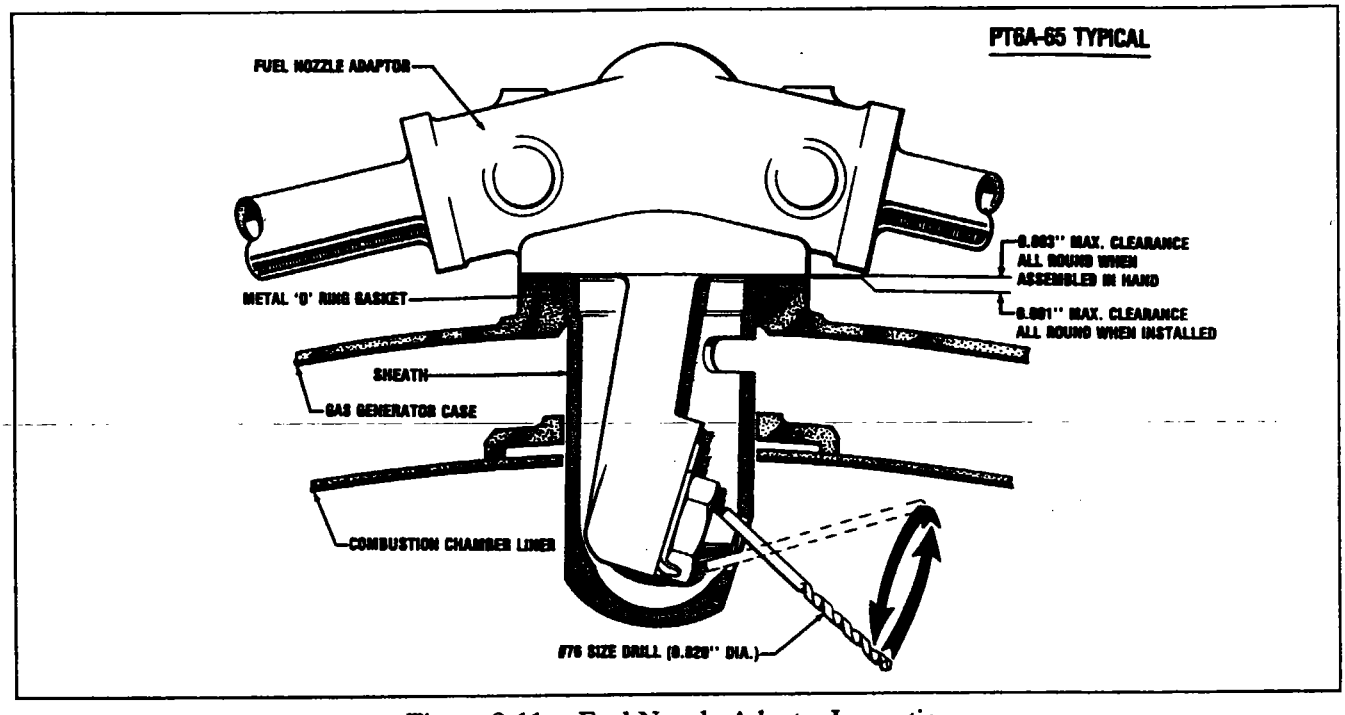

Figure 8-11a. Fuel Nozzle Adapter Inspection

8-78. FUNCTIONAL CHECK OF FUEL MANIFOLD ASSEMBLIES. Fuel nozzles may be tested alone or in their adapters, using the Pratt and Whitney Aircraft of Canada Ltd test rig P/N CPWA30506 or be fabricating a test rig locally from information supplied with this text. (Refer to Figure 8-12)

CAUTIONS

The test rig must be grounded to prevent possible danger of electrostatic discharge. Observe all fire precautions when working with fuel.

a. Using the fabricated test rig, set the regulator to zero, close the outlet axle (90), open filler valve 6) and remove plug (11).

CAUTION

Insure that all pressure if any is relieved from the tank before opening the filler valve (6), or removing plug (11).

b. Fill the tank (1) approximately 3/4 full with clean fuel and close the filler valve (6) and replace the plug (11).
c. Install a fuel nozzle with or without its adapter using a mounting bracket if desired. Refer to Figure 8-12 for view of mounting bracket.
d. Set the regulator to obtain 12.5 psig on the pressure gauge (19).
e. Holding the plug (23) against the transfer tube and nozzle adapter (if no bracket is used), gradually open the outlet valve (20).
f. A good clean spray should appear at less than 12.5 psig, free from spitting or drooling.
g. Increase the pressure to 60 psig. The volume of the spray should increase. There should be a maximum of 12% streakiness and the spray should be evenly spread about the center axis of the nozzle orifice.

NOTE

Streakiness is defined as variation of spray quantity in different parts of the spray cone, showing up as darker streaks in the spray.

8-78. FUNCTIONAL CHECK OF FUEL MANIFOLD ASSEMBLIES. (cont)

h. If spitting or drooling occurs at 12.5 psig, or more than 12 percent streakiness is evident at 60 psig, reject the fuel nozzle and install a new nozzle

i. If necessary, remove carbon buildup at the fuel nozzle by lightly brushing the orifice face with either a bronze or non-metallic bristled brush. Cleaning must be accomplished while fuel is flowing through the nozzle.

j. Close the pressure regulating valve (5) and allow the pressure gauge to decrease to zero, then close valve (20).

NOTE

It is suggested that a few new nozzles be tested in order to recognize a good spray pattern.

TABLE VIII-III. TROUBLESHOOTING CHART (FUEL SCAVENGER SYSTEM)

Trouble	Cause	Remedy
Fuel being drained overboard during engine start.	Defective check valve.	Replace check valve.
	Restricted jet pump nozzle.	Remove nozzle and clean. Check for proper seating of jet.
Fuel being drained overboard during engine shutdown.	Solenoid valve not opening.	Check operation and replace if necessary.
Fuel being drained overboard with full tip tanks.	Defective check valve.	Replace check valve.

8-79. FUEL SCAVENGER SYSTEM. The purpose of the fuel scavenger system is to collect residual fuel after engine shutdown and return the fuel to the nacelle fuel tank during engine start. The system consists of a solenoid valve, a jet type pump with an integral reservoir mounted on the side of the oil cooler duct below the accessory gearbox housing, a check valve, and the necessary lines and tubing interconnecting the system.

The system operates during engine shutdown and startup only. When the engine is shutdown, residual fuel is drained into the scavenger pump reservoir from the fuel nozzles. During engine startup, a solenoid valve is energized allowing engine purge fuel to enter the scavenger pump jet. The high velocity fuel from the jet picks up the fuel in the reservoir and returns the fuel to the nacelle tank When the starter is released, the solenoid valve is returned to the closed position. An overboard vent line is attached to the scavenger pump in the event of a malfunction. The presence of fuel being vented overboard indicates the system is not operating properly. Maintenance to the system is limited to checking the solenoid valve and check valve for proper operation and examining lines and tubing for obstructions or leakage. (Refer to Table VIII-III for Troubleshooting procedures.)

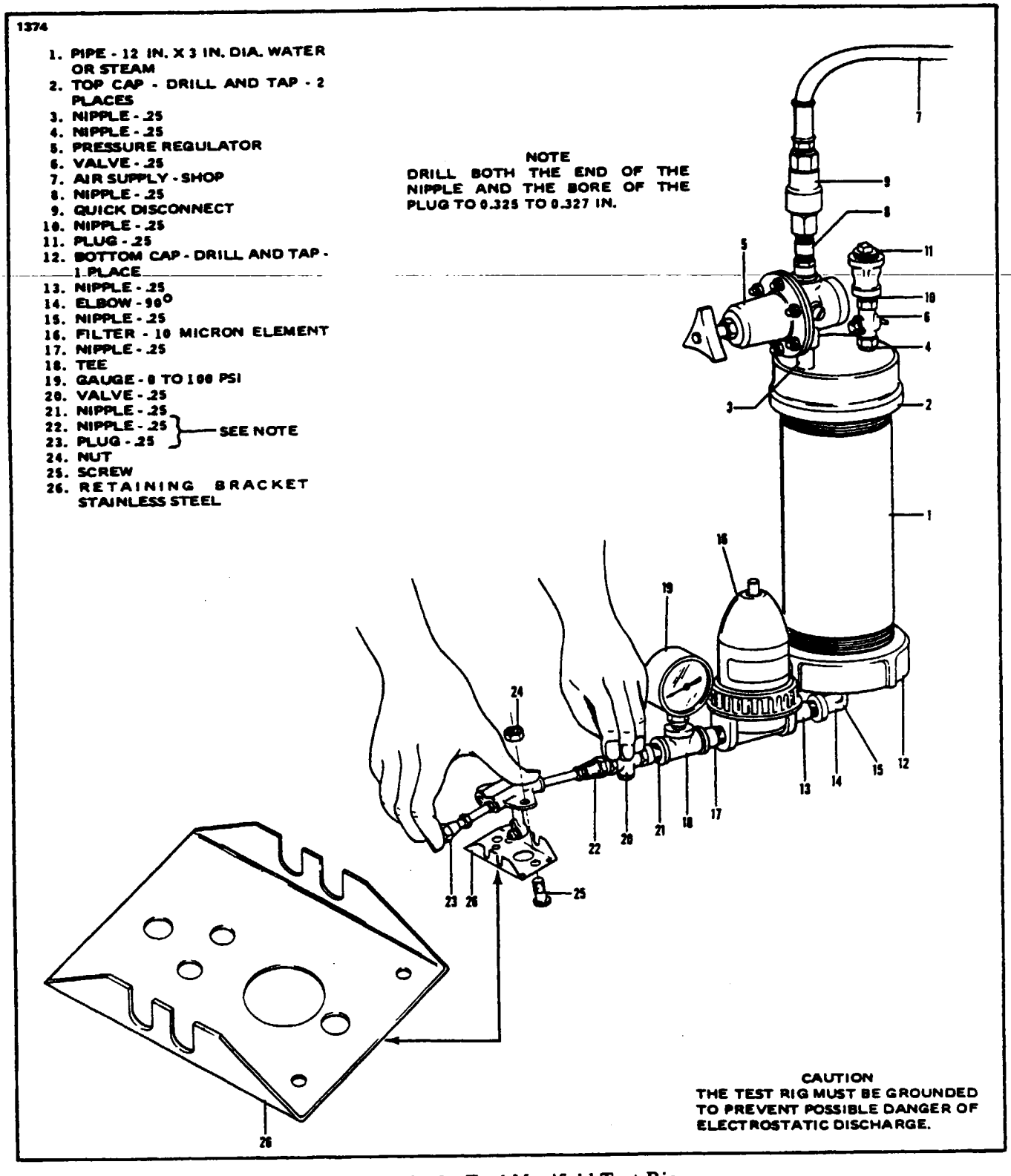

Figure 8-12. Fuel Manifold Test Rig

8-80. IGNITION SYSTEM.

8-81. GENERAL. The ignition system consists of one exciter box, two ignition leads, and two spark igniters for each engine.

The igniters are of the low voltage or shunted surface gap type, requiring about 8000-volts to spark. Ignition is by both igniters simultaneously; there is no provision for single igniter operation. D.C. power is delivered to the exciter box from the respective engine bus through a series hookup of an ignition selector switch in the engine control switch panel, and a micro switch located on the start control lever, so that no power is available to the exciter box until both switches have been actuated. The ignition cutoff switch will not be actuated until the start control lever has been moved out of the cutoff position.

For information regarding the items installed on the engine and functional check of the system, refer to Table VIII-II for appropriate Pratt and Whitney Engine Maintenance Manual.

WARNING

Observe the necessary safety precautions when working with the high-voltage ignition system. Allow at least 6 minutes after the ignition system is turned off before touching the ignition system. This is a 4.7 joule system and is capable of killing if improperly handled.

8-82. CHECKING IGNITION SYSTEM. A common cause of ignition problems is the low battery. Before inspecting the ignition system, try a normal start with a auxiliary power unit. If engine will not start proceed to check ignition system. The ignition system requires at least 9 volts to spark.

During the following procedure, it is recommended that an auxiliary power unit (APU) be used for motoring runs and start attempts to eliminate the possibility of low voltage at the exciter box and/or excessive battery drain.

WARNING

Do not turn on ignition before motoring engine 15 to 20 seconds prior to proceeding to step a.

a. Turn on battery master switch, ignition arm switch, and advance the condition lever to "run". (Engine not rotating) Listen for spark. If spark is audible, ignition is satisfactory.

1. Proceed as follows if spark is not audible as noted in Step a:
   (a) Disconnect the battery.
   (b) Remove one or the other engine igniters and touch lead end against engine case to be sure no residual charge is retained.
   (c) While the lead is disconnected install a new igniter on the end of the harness.

CAUTION

Hold the igniter stationary, insert the rubber lead into the igniter and tighten the nut finger tight. Do Not rotate the igniter after the rubber has been inserted, or the lead will be damaged. Turn the nut to prevent damaging the lead.

(d) Allowing the igniter to hang on the lead, reconnect the battery.

CAUTION

Be sure all personnel are clear of the ignition system and that the igniter is not near an explosive mixture, such as spilled fuel or solvents.

(e) Turn on master switch, ignition arm switch and advance the condition lever to "run". Ignition should fire one to two times per second depending on voltage.

(f) If ignition is firing satisfactorily as noted in Step (e) proceed as follows:
  (1) Secure engine by moving the condition lever to "Stop", ignition switch off, and turn battery-master switch off.
  (2) Install new igniters in the engine and reconnect the harness.

(g) Check the operation of new installed igniters by performing a normal start. If the aircraft is not in a position for starting the engine, perform the following:
  (1) Turn the battery master switch "ON".
  (2) DO NOT turn the Ignition Switch "ON".
  (3) DO NOT turn the Fuel Pump "ON".
  (4) Turn the Starter Switch "ON" and motor the engine for 15-20 seconds.
  (5) Turn the Starter Switch "OFF" and allow the engine to come to a complete stop.
  (6) Turn the Ignition Switch "ON".
  (7) DO NOT turn the Starter Switch "ON".
  (8) With the engine not rotating, advance the CONDITION lever to "RUN". Listen for spark. If sparking is audible, ignition is satisfactory.
  (9) Secure engine by turning the CONDITION lever to "STOP" Ignition Switch "OFF" and Battery Switch "OFF".

(h) If engine will not start, or if the ignition is NOT firing, secure the engine using normal procedures and perform the following:
  (1) Remove the electrical plug from the primary end of the exciter box and with a Volt Ohmmeter, check for 24 volts between pin A+ and B (the master switch and ignition switch must be "ON" and the start control full forward).
  (2) If 24 volts are present on the primary side and no ignition, attach a new harness to one side of the box. Install the new igniter on this lead and try for ignition (master "ON", ignition "ON" and start control forward). If no spark – replace exciter box.
  (3) Check the operation of the newly installed exciter box by repeating g above, for testing igniters in the engine.

(i) If engine does not start, check the fuel system for proper operation.

8-83. IGNITION CUTOFF SWITCH REMOVAL AND INSTALLATION. The ignition cutoff switches are mounted in the same manner as the landing gear warning switches. Refer to Section VII, for removal and installation instructions.

8-84. IGNITION CUTOFF SWITCH ADJUSTMENT. The ignition cutoff switches are located in the control pedestal and are activated by the start control lever.

a. Set the start control levers in the cutoff position.

b. With the adjustment screw on the switch bracket, adjust each switch separately toward the start control lever until the switch is heard to actuate at 1 inch of forward travel. The adjustment screw may be reached by inserting a long screwdriver through the travel slot of the start control lever in the pedestal cover.

c. Check adjustment of switch.

8-85. IGNITER PLUG CLEANING AND INSPECTION.

a. Cap the cable terminal end of the igniter plug to prevent entry of foreign material during cleaning.

b. Use a soft wire brush to clean the plug barrel and a cloth buffing wheel for threads. The electrode end of the igniter plug should never be cleaned. Any carbon on the tip aids operation of the plug.

CAUTION

Never sandblast or use a liquid suspended abrasive for cleaning igniter plug. Any abrasive action removes semi-conductor material in gap area and adversely affects functioning of the plug.

c. Blow any loose carbon or other loose foreign material from igniter plug with an air blast.

d. Remove cap from cable terminal end and wipe igniter plug with a lint-free cloth dampened in Methylethylketone. Dry with an air blast.

e. Inspect the terminal end of the plug for any visible evidence of damage. Minor nicks, burrs, or slightly damaged threads may be corrected using a fine file. Reject the plug if any of the following conditions exist:

NOTE

Check plug manufacturer's tolerances for wear limits, or Pratt and Whitney Engine Manual. (Refer to Table VIII-II for appropriate Pratt and Whitney Engine Maintenance Manual.)

1. Insulator broken, cracked or loose.
2. Input connector pin noticeably damaged or bent.
3. Center electrode badly burned, broken or pitted.
4. Flange and metal shield of firing end is bent, grooved or eroded. Mating surface of flange must be flat and smooth.

8-86. LUBRICATION SYSTEM.

8-87. GENERAL. The engine lubricating system supplies lubricating oil under pressure to the necessary engine components by a main pressure pump located in the oil tank. Oil pressure is regulated by a plunger-type pressure relief valve secured to the top of the main oil pressure pump. The oil cooler is located under the rear accessory gearbox housing and is attached to the fire wall and oil cooler duct.

8-88. OIL COOLER.

8-89. REMOVAL OF OIL COOLER.

a. Remove the engine cowling.

b. Remove the access panels on the nacelle.

c. Disconnect the drain lines attached to the oil cooler duct.

d. Disconnect the oil cooler inlet and outlet lines at the oil cooler and cap the lines to prevent contamination.

e. Drain the oil cooler.

f. The duct assembly is riveted to the lower section of cowl fire seal assembly. Release the duct assembly by removing the hardware which secures the lower section of the cowl fire seal assembly to the two upper seal assemblies.

g. Remove the attachment hardware connecting the cooler to the duct assembly and firewall and lower the oil cooler from the aircraft.

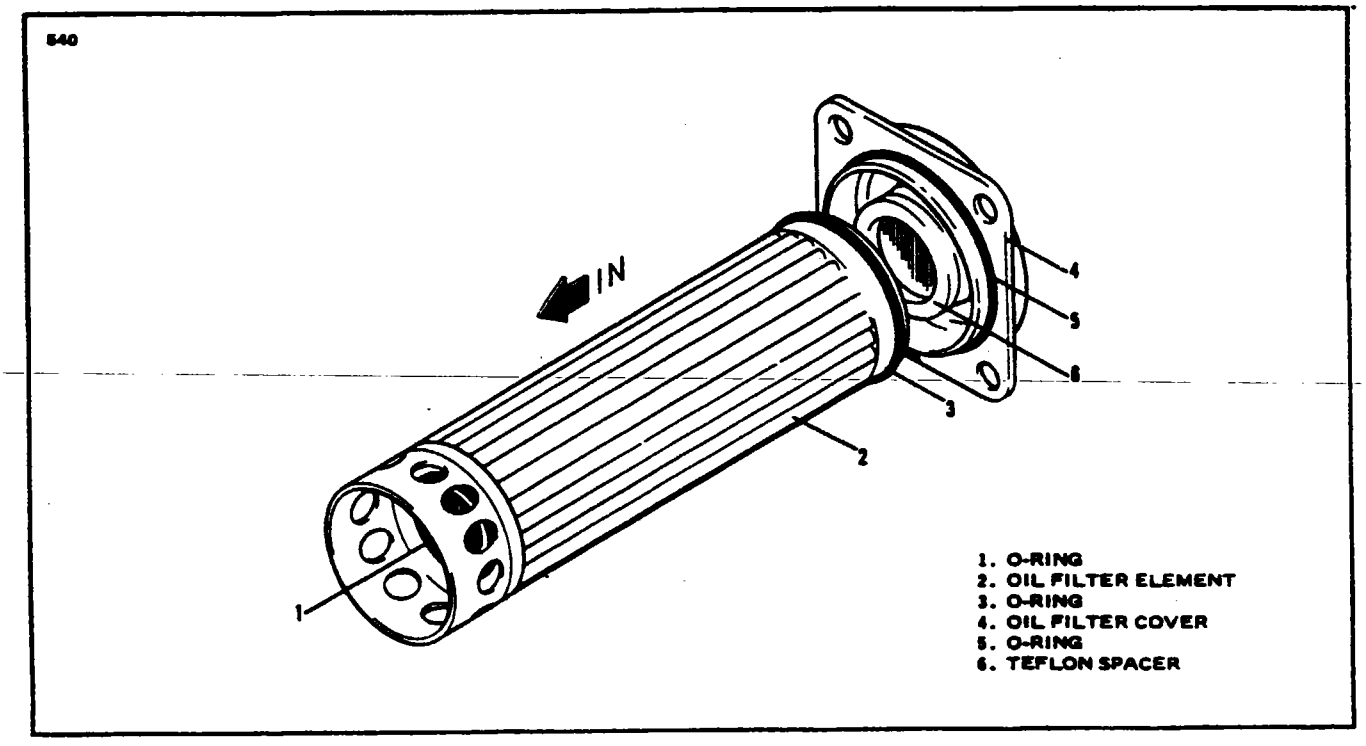

Figure 8-13. Oil Filter Element

8-90. INSTALLATION OF OIL COOLER.

a. Position the oil cooler on the firewall and install the mounting hardware. Install the attachment hardware connecting the oil cooler to the oil cooler duct.

b. Install the hardware securing the lower section of the cowl fire seal assembly to the two upper sections of the fire seal assembly.

c. Attach the drain lines to the oil cooler mounting bolts.

d. Connect the oil cooler inlet and outlet lines to the respective connection on the oil cooler. Install oil cooler drain plug and safety.

e. Perform an engine motoring run per Paragraph 8-57 to check for oil leaks.

f. Recheck the oil level and fill as required.

g. Install the access panels on the nacelle.

h. Install the engine cowling.

8-91. OIL FILTER ELEMENT REMOVAL AND INSTALLATION. (Refer to Figure 8-13.)

a. Remove the oil filter element by removing the four self-locking nuts and plain washers that secure the filter cover to the right side of the compressor inlet case at the 3 o'clock position.

b. Remove the filter cover and O-ring; discard the O-ring.

c. With the use of the filter removal tool (CPWA30328), withdraw the filter element from the filter body and discard the O-ring from the element.

NOTE

The non-cleanable filter P/N 3024084 will replace the cleanable type filter P/N 3022070 and has a service life of 1,000 hours. Cleanable filter elements 3017383 and/or 3022069 will be available from spare parts sales for those operators who wish to continue using this type filter.

d. Install the filter element in reverse order of removal (perforated flange first) using new O-rings.
e. Insure that teflon spacer is in position on lugs of filter cover.
f. Install cover and secure with four plain washers and self-locking nuts. Torque nuts 24 to 36 inch-pounds.

NOTE

Those who choose to retain the non-cleanable filter must insure that maintenance procedures prevent attempted ultrasonic cleaning of these parts.

8-92. CLEANING PROCEDURES FOR CLEANABLE FILTER ELEMENTS. In aircraft with a typical utilization of fifty hours per month or less, the element must be cleaned every 400 hours or 9 months, whichever comes first. With the filter removed, clean the element in accordance with instructions found in Pratt and Whitney Engine Maintenance Manual.

8-93. BLEED AIR SYSTEM.

8-94. GENERAL. The engine has three separate air bleed systems; a compressor air bleed control, a bearing compartment air seal and bleed system, and a turbine disc cooling system. Engine compressor bleed air is used to provide high pressure air for cabin pressurization.

Compressor bleed valve malfunction may cause unsatisfactory part power and performance checks. For symptoms of compressor bleed valve malfunction, refer to Table VIII-II for appropriate Pratt and Whitney Engine Maintenance Manual.

8-95. ENGINE INDICATING SYSTEMS.

8-96. TORQUE PRESSURE INDICATING SYSTEM.

8-97. GENERAL. The torque pressure system consists of a pressure transmitter mounted on the reduction gearbox case, and a torquemeter indicator mounted in the instrument panel. The torque pressure value is obtained from the pressure transmitter which monitors the pressure differential between the two outlets on top of the reduction gearbox case.

8-98. CALIBRATION. (Refer to Figure 8-14.)

a. On earlier models the torque indicating system can be calibrated by adjusting the transmitter, P/N 489 410 as follows:

1. Remove the torque pressure transmitter from the reduction gear box case.
2. Connect a suitable pressure system tester with a calibrated gauge to the pressure transmitter using the appropriate AN fittings and pressure hose. The pressure tester must be capable of providing and monitoring static pressures from 0 to 60 psi using engine oil.
3. Reconnect the engine electrical harness to the transmitter and turn the aircraft master switch ON.
4. Adjust pressure tester to 26.2 psi.
5. Adjust transmitter to obtain 800 foot pounds.
6. After adjusting transmitter to 800 foot pounds, check for 100 to 1800 foot pounds at 100 foot pound increments. Adjust to minimize error.
7. If necessary, repeat steps 5 and 6 to obtain correct torque readings. The transmitter adjustment is an allen screw located behind the transmitter capscrew. Turn the adjustment accordingly to correct the torque reading. Recheck all readings after replacing lockscrew.

b. On later models the torque indicating system can be calibrated by the low and high adjustments behind the gauge. The transmitter, P/N 29287-02 used on later models requires no adjustments. Proceed to calibrate the torque indicating system on later models as follows:

1. Remove the torque pressure transmitter from the reduction gear box case.
2. Connect a suitable pressure system tester with a calibrated gauge to the pressure transmitter using the appropriate AN fittings and pressure hose. The pressure tester must be capable of providing and monitoring static pressures from 0 to 60 psi using engine oil.
3. Reconnect the engine electrial harness to the transmitter and turn the aircraft master switch ON.
4. Adjust pressure tester to 26.2 psi and adjust low setting on gauge to 800 foot pounds. Apply 49.1 psi and adjust high setting to 1500 foot pounds.
5. After making the (L)-Low and (H)-High adjustments on the gauge, recheck to see that both adjustments remained within the tolerance allowed. (Refer to Table VIII-IV.)
6. After successful completion of, (L) 800 foot pound and (H) 1500 foot pound adjustments to gauge, check from 100 to 1800 foot pounds at 100 foot pounds increments. Adjust to minimize error.
7. If necessary, repeat steps 4, 5 and 6 to obtain correct torque readings. The gauge adjustments are located behind the gauge. Turn the adjustment accordingly to correct the torque reading.

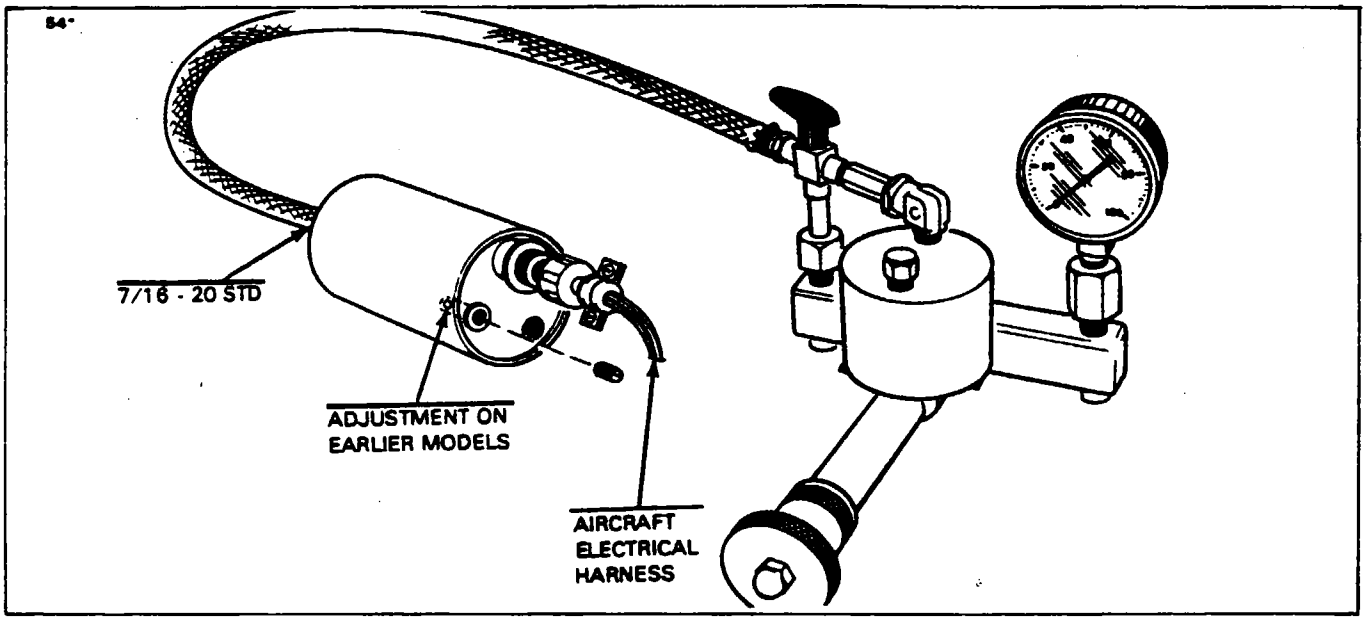

Figure 8-14. Torque System Calibration

TABLE VIII-IV. TORQUE SYSTEM CALIBRATION DATA

PSI 31T/31T1	FT.-LBS. 31T/31T1	FT.-LBS. TOLERANCE PA-31T	PA-31T1
0	0	+/-25	+/-25
3.27	100	+/-25	+/-25
6.54	200	+/-25	+/-25
9.81	300	+/-25	+/-25
13.08	400	+/-25	+/-25
16.36	500	+/-20	+/-15
19.63	600	+/-15	+/-10
22.90	700	+/-10	+/- 5*
26.17	800	+/- 5*	+/-10
29.44	900	+/-10	+/-15
32.71	1000	+/-15	+/-15
35.98	1100	+/-15	+/-15
39.25	1200	+/-15	+/-10*
42.52	1300	+/-15	+/-15
45.80	1400	+/-15	+/-20
49.07	1500	+/-10*	+/-25
52.34	1600	+/-15	+/-25
55.61	1700	+/-20	+/-25
58.88	1800	+/-25	+/-25

NOTE: Calibration and tolerance with 29287 transmitter and indicator are as noted above. Adjust both the low and high end of the scale. Adjust for minimum error at points indicated by an *.

PS50147

TABLE VIII-IV. TORQUE SYSTEM CALIBRATION DATA (cont.)

PSI 31T1 (Cheyenne 1A Only)	FT.-LBS. 31T1 (Cheyenne 1A Only)	FT.-LBS. TOLERANCE 31T1 (Cheyenne 1A Only)
0	Blank	0
5	153	+/-25
10	306	+/-25
15	458	+/-25
20	611	+/-15
25	764	+/-10
30	917	+/-10
35	1070	+/-10
40	1223	+/-15
45	1376	+/-15
50	1528	+/-15
55	1681	+/-15
60	1834	+/-25

PPS 60112

8-98a. CHEYENNE IA TORQUE INDICATING SYSTEM CHECK. PPS 60112

a. To check the complete torque indicating system:

1. Remove the hose from the high pressure port on the transducer.
2. Attach the pressure outlet from either a dead-weight pressure test unit or a Barfield pressure test unit to the high pressure port on the transducer. Do not remove the vent line from the transducer.
3. Attach a 28 VDC power source to the aircraft external power receptacle.
4. Ensure that the pressure test unit is set at 0 psi.
5. Activate the DC power source.

NOTE

The pressure outlet from the test unit must be on the same level as the high pressure inlet on the transducer during the calibration check procedure.

6. Increase pressure to the torque transducer in accordance with the 31T1A section of Table VIII-IV.
7. Record readings on the aircraft torque indicator both in ascending and descending pressure application. The readings must be in accordance with tolerances listed in the 31T1A section of Table VIII-IV.

b. To check the torquemeter:

1. Remove the torquemeter from the instrument panel.

2. Hook the torquemeter up to a voltmeter, potentiometer and power supply as shown in Figure 8-15.

3. Adjust the potentiometer until 0 is read on the voltmeter. A reading of 0 should also be on the torquemeter.

4. Adjust the potentiometer to the nominal voltages in Table VIII-V, comparing them to the ft.-lb. display on the torquemeter.

5. The torquemeter may be adjusted by means of the adjustment screw on back of the instrument case.

c. To check the torquemeter system transducer:

1. Disconnect the hose from the high pressure fitting on the transducer and connect the Barfield pressure test unit to the fitting.

2. Disconnect the electrical connector from the transducer.

3. Using an MS 3116-8-45 (or equivalent) electrical connector, fabricate a test harness per the schematic in Figure 8-16. Connect the test harness to the transducer. Take the voltage readings from the wires coming from B and C of the connector.

4. Increase the pressure to the transducer to the values given in Table VIII-VI. The voltage readings should be within the tolerances given.

5. There are no repairs or adjustments on the transducer. If defective, it must be replaced.

THIS SPACE INTENTIONALLY LEFT BLANK

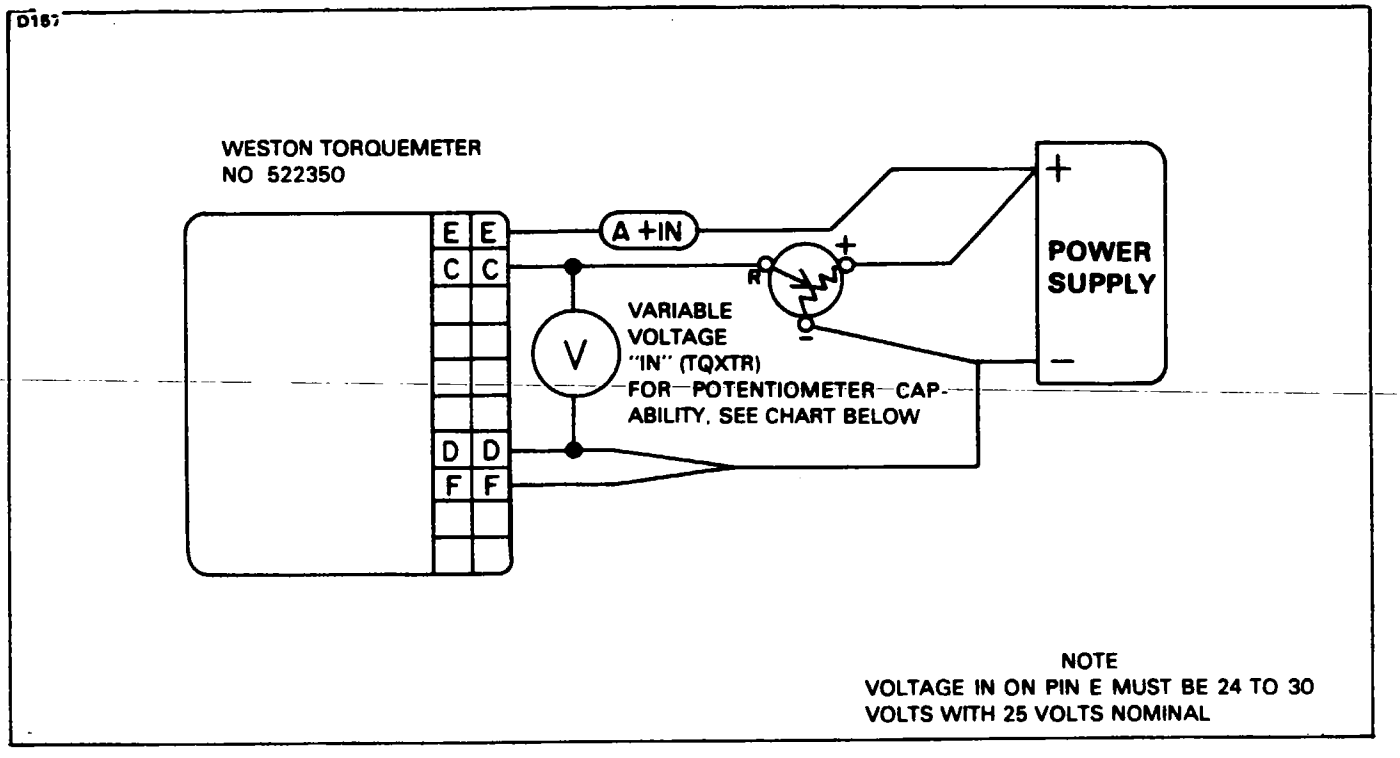

Figure 8-15. Cheyenne 1A Torquemeter Test Set-Up

TABLE VIII-V. CHEYENNE 1A TORQUEMETER CALIBRATION DATA

Nominal Voltage "IN" on Pin C of Torquemeter	Ft.-Lb. Display	Display Tolerance	Nominal Voltage "IN" on Pin C of Torquemeter	Ft.-Lb. Display	Display Tolerance
0	0		2.453*	1050*	+/-3
.350*	150*	+/-6	2.500	1070	+/-3
.357	153	+/-6	2.686*	1150*	+/-3
.700*	300*	+/-6	2.857	1223	+/-4
.714	306	+/-6	3.036	1300*	+/-4
1.050*	450*	+/-5	3.214	1376	+/-4
1.071	459	+/-5	3.386*	1450*	+/-4
1.402*	600*	+/-4	3.571	1529	+/-4
1.428	611	+/-4	3.737*	1600*	+/-4
1.752*	750*	+/-3	3.928	1681	+/-4
1.785	764	+/-3	3.972*	1700*	+/-4
2.103*	900*	+/-3	4.286	1834	+/-5
2.143	917	+/-3			

*DENOTES INTERPOLATED VALUES

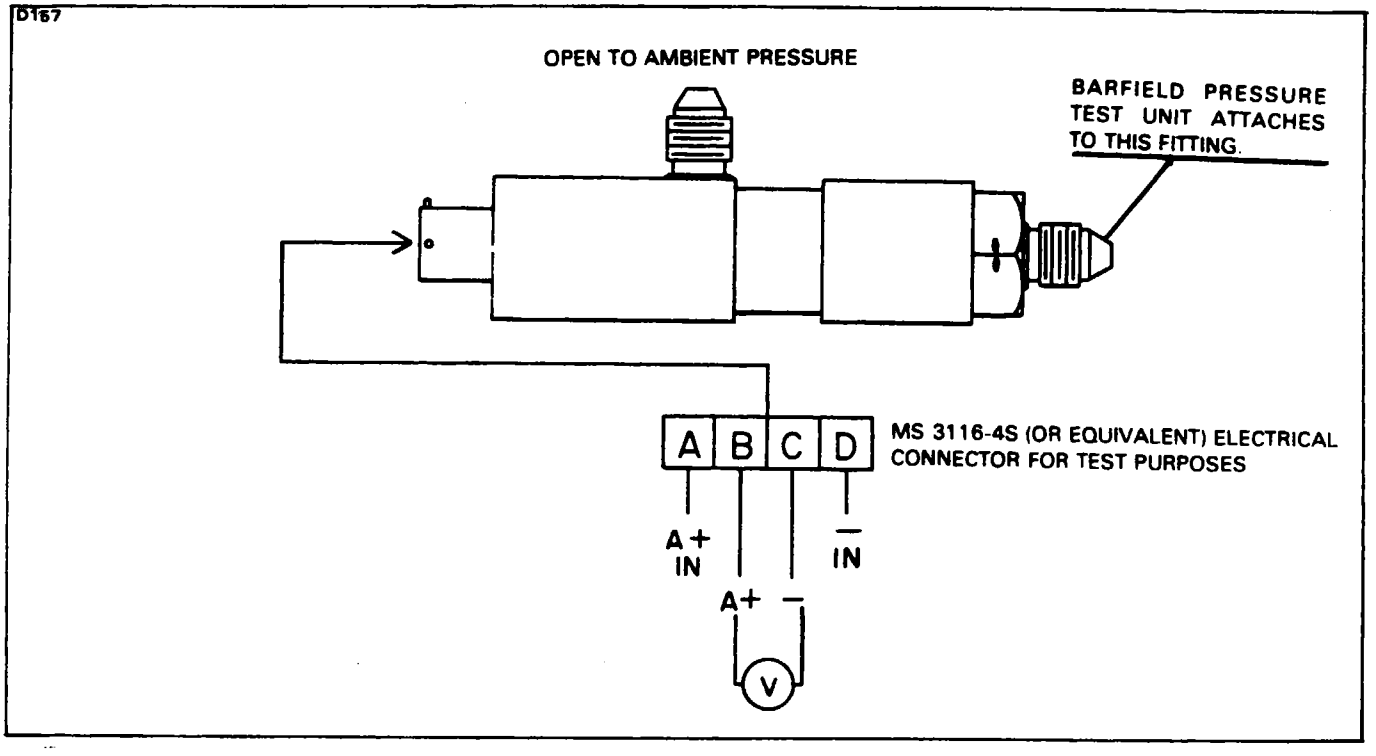

Figure 8-16. Cheyenne IA Torquemeter Transducer Test Set-Up

TABLE VIII-VI. CHEYENNE IA TORQUEMETER TRANSDUCER PRESSURE TEST SPECIFICATIONS

Voltage in on Pin A of transducer must be 24 to 30 volts with 25 volts nominal.			
PSIG Oil Pres. "IN"	Voltage "OUT"	PSIG Oil Pres. "IN"	Voltage "OUT"
0	0 +.070 -.000	40	2.875 +/-.025
5	.357 +/-.046	45	3.214 +/-.025
10	.714 +/-.044	50	3.571 +/-.025
15	1.071 +/-.044	55	3.928 +/-.025
20	1.428 +/-.025	60	4.286 +/-.046
25	1.785 +/-.016	65	4.643 +/-.046
30	2.143 +/-.016	70	5.000 +/-.046
35	2.500 +/-.016		

8-99. INTER-TURBINE TEMPERATURE SENSING SYSTEM (ITT).

8-100. GENERAL. The inter-turbine temperature sensing system (T5) is designed to monitor engine operating temperatures at a point between the two turbines. The system consists of a thermocouple assembly, trim harness and an instrument panel-mounted indicator. Refer to Table VIII-II for appropriate Pratt and Whitney Engine Maintenance Manual for detailed information.

8-101. RESISTANCE CHECK OF INTER-TURBINE TEMPERATURE SYSTEM. (Refer to Figure 8-17.) This check may be performed by using a Turbine Temperature Indicating System Test Set (Barfield 2312G-8, Barfield Inst. Corp., 4101 N.W. 29th St., Miami, Florida 33142 or equivalent). Read complete test set instruction manual before attempting to use the unit.

a. Check continuity and loop resistance measured across chromel and alumel terminals of terminal block. Acceptable loop resistance is 0.5 to 1.0 ohm with the aircraft harness disconnected from the engine terminals.

CAUTION

The thermocouples will generate a small potential which will produce errors in the measured values if this check is made while the engine is hot.

NOTE

If several probes are broken or damaged internally, the loop resistance would not necessarily fall outside the allowable tolerance. However, erroneous temperature indications could occur because of the resultant unbalance in the harness circuit.

b. Check insulation resistance of harness at terminal block. When measured from either chromel or alumel terminal to ground, minimum acceptable resistance is 5000 ohms. (Refer to Figure 8-18.)

c. Check the resistance of the aircraft harness with the engine harness disconnected, and the red and yellow wires temporarily bolted together instead of connected to the ITT indicator terminals. The value should be approximately 7.63 ± .1 ohms.

8-102. INTER-TURBINE TEMPERATURE CALIBRATION CHECK. (Refer to Figure 8-18.)

a. Remove yellow and red wires from the heat probe terminal that go to the ITT gauge.

b. Connect the wires to the Barfield (2312G-8) test set or equivalent,and the Digital Multimeter.

c. Position the Barfield Instrument function switch to Indicate and the Digital Multimeter to DCV and 1 position.

d. Check the ITT gauge for each temperature indication by the following:

1. While pressing the test switch and turning the calibration adjustment knob on the Barfield instrument, obtain the proper mv (millivolts) indicated on the multimeter for the appropriate temperature given on the chart.

2. Check each temperature indication and tolerance with the appropriate mv (millivolts).

8-103. TACHOMETER-GENERATORS (PROPELLER AND GAS GENERATOR).

8-104. GENERAL. The propeller (Np) and gas generator (Ng) tachometer-generators produce an electric current which is proportional to gas generator and propeller speed. The electric current is monitored by tachometer indicators mounted in the instrument panel which indicate propeller and gas generator speed. The gas generator tachometer-generator is mounted on the backside of the accessory gearbox and rotates counterclockwise. The propeller tachometer-generator is mounted on the right side of the reduction gearbox case and rotates clockwise.

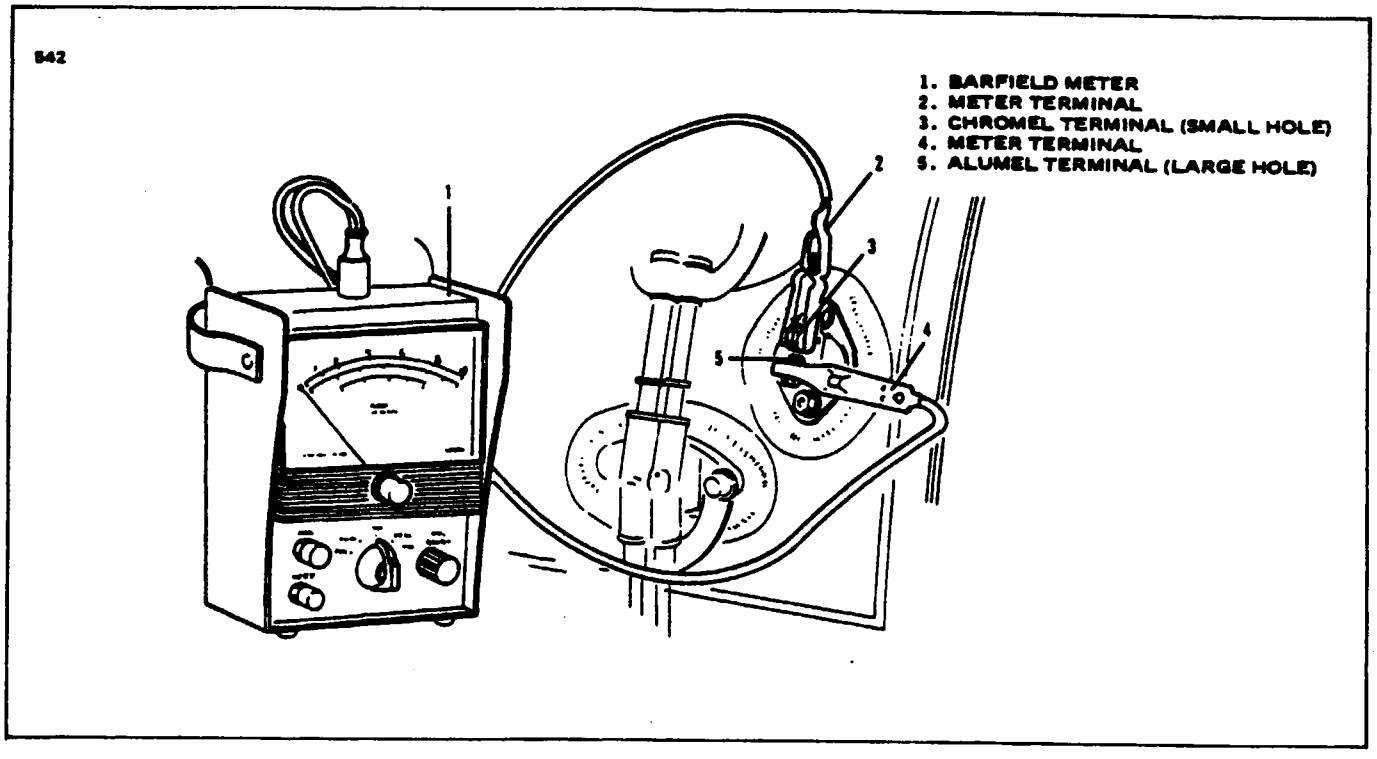

Figure 8-17. T5 Thermocouple Harness Loop Resistance Check

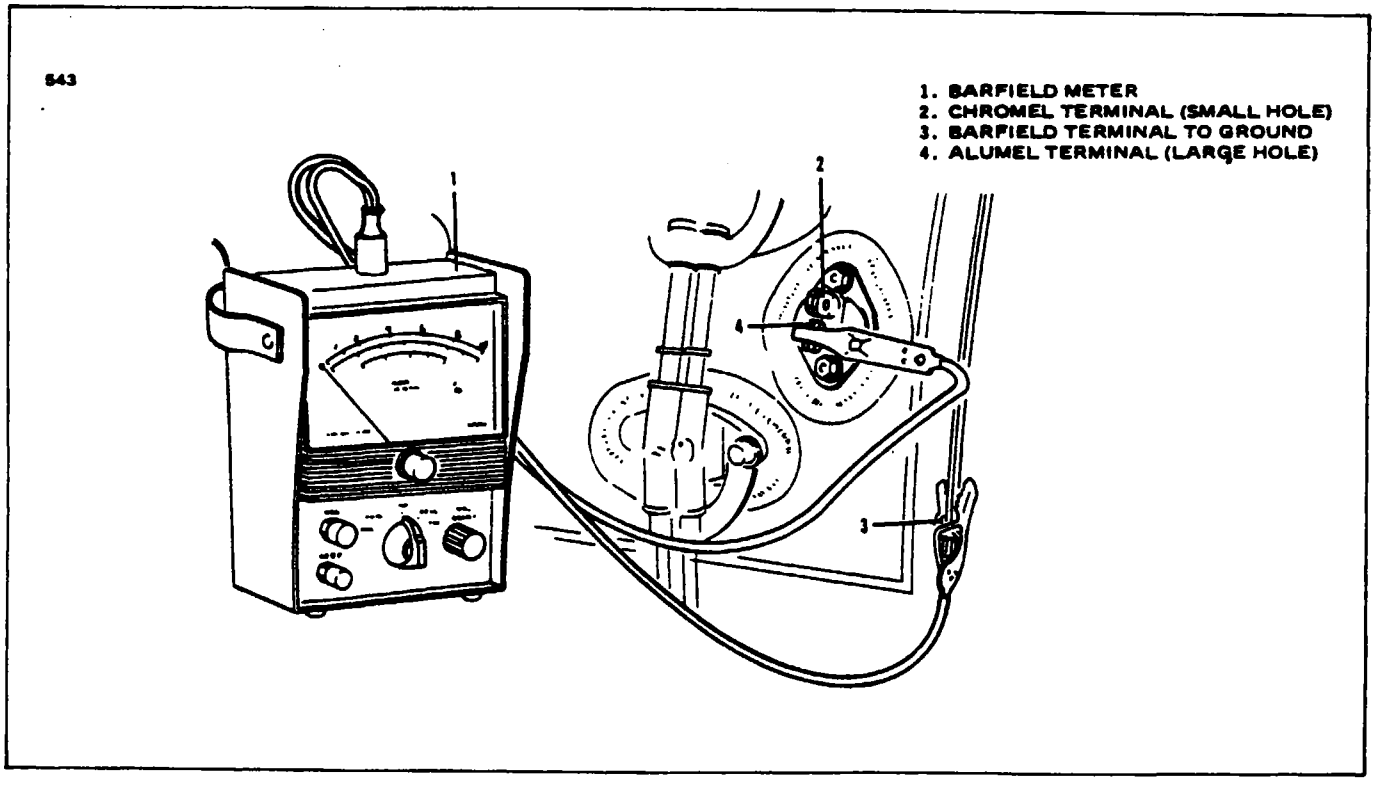

Figure 8-18. T5 Harness Insulation Resistance Check

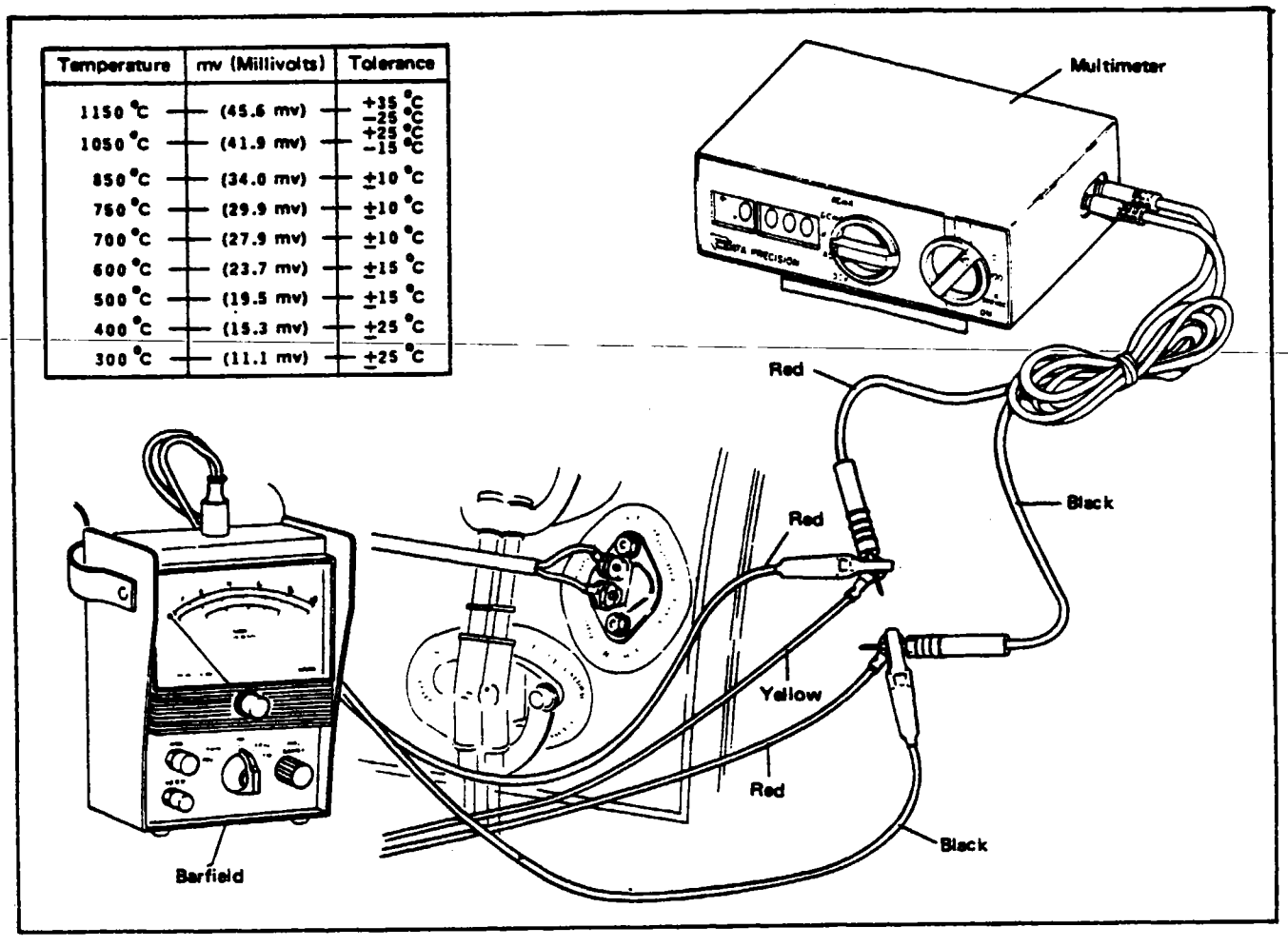

Temperature	mv (Millivolts)	Tolerance
1150 °C	(45.6 mv)	+35 °C −25 °C
1050 °C	(41.9 mv)	+25 °C −15 °C
850 °C	(34.0 mv)	±10 °C
750 °C	(29.9 mv)	±10 °C
700 °C	(27.9 mv)	±10 °C
600 °C	(23.7 mv)	±15 °C
500 °C	(19.5 mv)	±15 °C
400 °C	(15.3 mv)	±25 °C
300 °C	(11.1 mv)	±25 °C

Figure 8-19. Inter-Turbine Temperature Calibration Check

8-105. REMOVAL AND INSTALLATION.

a. Disconnect the electrical connector from the generator unit.
b. Remove the four mounting nuts at the base of the generator.
c. Pull the unit straight out and away from the mounting lugs.

NOTE

Cover the tach generator mounting pad to prevent foreign material from entering the engine.

d. To reinstall the generator unit, place a new gasket on the mounting pad.
e. Lubricate the generator unit shaft splines with Molybdenum Disulfide, Type "G," paste form lubricant.
f. With the electrical socket pointing down, slide the generator into place over the mounting studs.
g. Secure the unit in place with the four mounting nuts and torque to 65 to 85 inch-pounds.

8-106. ENGINE CONDITION TREND MONITORING SYSTEM. Contemporary gas turbine engine maintenance systems frequently include inflight engine performance monitoring, as a means of detecting mechanical deterioration in engine gas paths. A simple system requiring almost no arithmetic calculation has been devised for PT6 Engines to aid in planning indicated rectifications early, and so reduce primary and secondary damage costs resulting from fully developed failures, and risks of inflight shutdowns and flight cancellations.

The Engine Condition Trend Monitoring System has been set up by Pratt and Whitney Aircraft of Canada Limited in order to maintain efficient engine performance. This is not a mandatory procedure, but is highly recommended by Pratt and Whitney and Piper Aircraft Corporation. Copies of the procedure can be obtained from Pratt and Whitney. Refer to the latest revision of Pratt and Whitney Information Letter #18, Aircraft Gas Turbine Operation, for more information.

8-107. ENGINE WIRING HARNESS 500 HOUR INSPECTION. Each 500 hours, inspect the engine wiring harness where it crosses the hot section.

a. Remove the metal heat resistant tape from the engine wiring harness where it crosses the hot section.
b. Inspect the wiring harness for heat damage or deterioration. Repair or replace as required.
c. Reinstall metal heat resistant tape.

THIS SPACE INTENTIONALLY BLANK

TABLE VIII-VII. TROUBLESHOOTING CHART (ENGINE)

Trouble	Cause	Remedy
Engine fails to start.	No fuel supply to engine.	Check for clean fuel supply at fire wall shutoff valve.
	Air in fuel system.	Perform motoring run. (Refer to Paragraph 8-57.)
	Open ignition circuit.	Check wiring and connections.
	Defective engine driven fuel pump.	Check for flow from pump while motoring engine. If no flow, replace pump.
	Defective fuel control unit.	Check for flow from FCU outlet tube to starting flow control while motoring engine. If no flow, remove FCU, check bypass valve by applying 5 psi max. to bypass return port and check for air leakage from FCU inlet. If leakage is evidenced, replace fuel control unit and fuel pump. If no leakage, replace only FCU.
	Defective starting flow control.	Disconnect primary tube and check for evidence of flow while motoring engine with start control lever in run position. If no flow, replace starting flow control.
	Restricted fuel nozzles.	Clean and check nozzles. (Refer to Engine Maintenance Manual.)

TABLE VIII-VII. TROUBLESHOOTING CHART (ENGINE) (cont.)

Trouble	Cause	Remedy
Engine does not idle properly.	Idle speed setting incorrect.	Adjust idle speed and minimum flow as required. (Refer to Paragraph 8-59.)
	Leak or restriction in FCU pneumatic system.	Check all pneumatic tubes and connections for leakage.
Engine does not accelerate properly.	Leak or restriction in fuel control pneumatic system.	Check all connections for leakage. Check for dirt in Px metering orifice. (Refer to Engine Maintenance Manual for cleaning instructions.)
	Defective fuel control unit.	Replace fuel control unit.
Engine does not decelerate.	Power control linkage adjusted incorrectly.	Adjust linkage. (Refer to Paragraph 8-37.)
	Defective fuel control unit.	Replace fuel control unit.
Engine does not develop full power.	Faulty engine instrumentation.	Check instrument system. Replace or recalibrate as necessary. If torquemeter system defect is established, return power section to overhaul facility for repair.

TABLE VIII-VII. TROUBLESHOOTING CHART (ENGINE) (cont.)

Trouble	Cause	Remedy
Engine does not develop full power (cont).	Control linkage adjusted incorrectly.	Check adjustment. (Refer to Paragraph 8-38.)
	Propeller governor pneumatic section adjusted incorrectly.	Adjust. (Refer to Paragraph 8-27.)
	Leak or restriction in fuel control pneumatic system.	Check all tubes for restrictions and connections for leakage.
	Engine power settings not adjusted correctly.	Check adjustments settings. (Refer to Paragraph 8-59.)
	Defective fuel control unit.	Replace fuel control unit.
	Restricted fuel nozzles.	Clean and check nozzles. (Refer to Engine Maintenance Manual.)
Excessive vibration.	Propeller out of balance.	Replace propeller.
	Compressor or compressor turbine disc out of balance.	Return disc to an overhaul facility. (Refer to Engine Maintenance Manual.)
Low oil pressure.	Oil pressure indicating system defective.	Check system and repair as necessary.
	Insufficient oil.	Fill oil tank as required.
	Excessive hot air leakage through faulty heat shielding.	Replace engine.
	High oil temperatures.	Check cooling system.

TABLE VIII-VII. TROUBLESHOOTING CHART (ENGINE) (cont.)

Trouble	Cause	Remedy
High oil temperature.	Insufficient oil supply.	Refill oil tank as required.
	Faulty instrumentation.	Check instrumentation, repair or replace as required.
	Cooling system defective.	Check system and clean cooler if required.
	Excessive hot air leakage through faulty heat shielding.	Replace engine.
Excessive oil consumption.	Leakage or restriction in pressure or scavenger oil tubes.	Visually inspect all tubes and connections. Repair as required.
	Oil level too high.	Maintain correct oil level.
	Defective Labyrinth seals.	Check inlet and exhaust areas for collections of oil. If evident, replace engine.
	Defective oil to fuel heater (internal leakage).	Pressure check heater. (Refer to Engine Maintenance Manual.)

GRIDS 2L22 THRU 2L24
INTENTIONALLY LEFT BLANK

Cheyenne

AIRPLANE

SERVICE MANUAL

CARD 3 OF 8

PA-31T CHEYENNE

PA-31T CHEYENNE II

PA-31T1 CHEYENNE I

PA-31T1 CHEYENNE IA

PA-31T2 CHEYENNE II XL

PIPER AIRCRAFT CORPORATION

PART NUMBER 753 826

3A1

JULY 2, 1984
INTERIM REVISION: OCTOBER 15, 1997

SERIAL NUMBER INFORMATION

PA-31T, CHEYENNE

Serial Numbers 31T-7400002 to 31T-7720069 inclusive.

PA-31T, CHEYENNE II

Serial Numbers 31T-7820001 to 31T-8120104 inclusive.

PA-31T1, CHEYENNE I

Serial Numbers 31T-7804001 to 31T-8104101 inclusive.

PA-31T1, CHEYENNE IA

Serial Numbers 31T-8304001 to 31T-8304003 inclusive;
(then, serial number series changed to)
Serial Numbers 31T-1104004 to 1104017 inclusive.

PA-31T2, CHEYENNE II XL

Serial Numbers 31T-8166001 to 31T-8166076 inclusive;
(then, serial number series changed to)
Serial Numbers 31T-1166001 to 1166008 inclusive.

AEROFICHE EXPLANATION AND REVISION STATUS

Service manual information incorporated in this set of Aerofiche cards has been arranged in accordance with general specifications of Aerofiche adopted by General Aviation Manufacturer's Association, (GAMA).

Information compiled in this Aerofiche Service Manual will be kept current by revisions distributed periodically. These revisions supersede all previous revisions and are complete Aerofiche card replacements and supersede Aerofiche cards of same number in set.

Conversion of Aerofiche alpha/numeric code numbers:
First number is Aerofiche card number.
Letter is horizontal line reference per card.
Second number is vertical line reference per card.
Example: 2J16 Aerofiche card number two of given set, Grid location J16.

To aid in locating the various chapters and related service information desired, the following is provided:

1. At the beginning of Aerofiche Card No. 1:
   a. A complete Section Index for all fiche in this set.
   b. A complete list of Illustrations for all fiche in this set.
   c. A complete list of Tables for all fiche in this set.
   d. A complete list of Charts for all fiche in this set.
2. At the beginning of each subsequent Aerofiche Card:
   a. A complete Section Index for all fiche in this set.
   b. A complete list of Illustrations for that fiche only.
   c. A complete list of Tables for that fiche only.
   d. A complete list of Charts for that fiche only.
3. A complete Table of Contents showing paragraph titles and appropriate grid location numbers is given at the beginning of each Section relating to the information within that Section.
4. Identification of revised material:
   Revised text and illustrations are indicated by a black vertical line along the left-hand margin of the frame, opposite revised, added or deleted material. Revision lines indicate only current revisions with changes and additions to or deletions of existing text and illustrations. Changes in capitalization, spelling, punctuation, indexing, physical location of material, or complete page additions are not identified by revision lines.

AEROFICHE EXPLANATION AND REVISION STATUS (cont)

5. Revisions to Service Manual 753 826 issued December 1973 are as follows:

Revision	Publication Date	Aerofiche Card Effectivity
ORG731208	December 8, 1973	
CR810206	February 6, 1981	1, 2, 3, 4, 5, 6, 7 and 8
PR810923	September 23, 1981	1, 2, 3, 4, 5, 6, 7 and 8
PR810925	September 25, 1981	1 Only
PR820215	February 15, 1982	1, 2, 3, 4, 5, 6, 7 and 8
PR821015	October 15, 1982	1, 2, 3, 4, 5, 6, 7 and 8
PR830425	April 25, 1983	1, 2, 3, 4, 5, 6, 7 and 8
PR840105	January 5, 1984	1, 2, 3, 4, 5, 6, 7 and 8
PR840323	March 23, 1984	1, 2, 3, 4, 5, 6, 7 and 8
PR840702	July 2, 1984	1, 2, 3, 4, 5, 6, 7 and 8
IR860220	February 20, 1986	3
IR860430	April 30, 1986	3
IR860821	August 21, 1986	1
IR871009	June 15, 1988	2
IR900313	March 13, 1990	1
IR941019	October 19, 1994	1 and 2
IR950320	March 20, 1995	1
IR971015 *	October 15, 1997	1, 2, 3, 4, 5, 6, 7 and 8

*** INTERIM REVISION TO SERVICE MANUAL 753-826**

Revisions appear in all eight Aerofiche cards. Discard your entire existing Aerofiche card set (Cards 1 - 8) and replace it with the revised Aerofiche card set (Cards 1 - 8) dated 10/15/97.

Consult the Customer Service Information Catalog Aerofiche (P/N 1753-755) for current revision dates for this manual.

SECTION INDEX

SECTION	AEROFICHE CARD NO. 1	GRID NO.
I	INTRODUCTION	1A19
II	HANDLING AND SERVICING	1A22
III	INSPECTION	1D23
IV	STRUCTURES	1E13
V	SURFACE CONTROLS	1I8
	AEROFICHE CARD NO. 2	
VI	HYDRAULIC SYSTEM	2A10
VII	LANDING GEAR AND BRAKE SYSTEM	2D19
VIII	POWER PLANT (PA-31T AND PA-31T1)	2I11
	AEROFICHE CARD NO. 3	
VIIIA	POWER PLANT (PA-31T2)	3A8
IX	FUEL SYSTEM	3D7
X	INSTRUMENTS	3F2
	AEROFICHE CARD NO. 4	
XI	ELECTRICAL SYSTEM	4A7
	AEROFICHE CARD NO. 5	
XII	ELECTRONICS	5A9
XIII	ENVIRONMENTAL CONTROL SYSTEM (PA-31T AND PA-31T1)	5B1
	AEROFICHE CARD NO. 6	
XIIIA	ENVIRONMENTAL CONTROL SYSTEM (PA-31T2)	6A8
XIV	ACCESSORIES AND UTILITIES	6C1
	AEROFICHE CARD NO. 7	
XV	ELECTRICAL SCHEMATICS (PA-31T AND PA-31T1)	7A5
	AEROFICHE CARD NO. 8	
XVA	ELECTRICAL SCHEMATICS (PA-31T2)	8A5

LIST OF ILLUSTRATIONS

Figure		Aerofiche Grid No.
8A-1.	Engine Cowling	3A13
8A-2.	Engine Air Inlet Ice Protection System	3A15
8A-3.	Oil Cooler Door Installation	3A16
8A-4.	Propeller Installation	3A19
8A-5.	Typical Nicks and Removal Method	3A20
8A-6.	Engine Installation (Typical)	3B3
8A-7.	Throttle Control Cable Handling Procedure	3B7
8A-8.	Engine Controls	3B10
8A-9.	Low Pitch Stop Switch Adjustment	3B16
8A-10.	Minor Torque Adjustment	3B21
8A-11.	Running Adjustment Settings	3B24
8A-11a.	Fuel Nozzle Adapter Inspection	3C12
8A-12.	Fuel Manifold Test Rig	3C15
8A-13.	Oil Filter Element	3C19
8A-14.	Digital/Analog Torque Calibration	3C21
8A-15.	T5 Thermocouple Harness Loop Resistance Check	3C24
8A-16.	T5 Harness Insulation Resistance Check	3C24
8A-17.	Inter-Turbine Temperature Calibration Check	3D1
9-1.	Fuel System Schematic (PA-31T and PA-31T2)	3D10
9-2.	Fuel System Schematic (PA-31T1 Only)	3D12
9-3.	Tip Tank Installation	3D13
9-4.	Fuel Cell Installation Inboard	3D15
9-4a.	Fuel Cell Attaching Hardware	3D16
9-5.	Fuel Cell Installation Outboard	3D18
9-6.	Fuel Valve Drain Plate	3D20
9-7.	Crossfeed Valve	3E4
9-8.	Fuel Shutoff Valve	3E4
9-9.	Fuel Filter	3E6
9-10.	Submerged Fuel Boost Pump	3E8
9-11.	Fuel System Installation	3E11
9-12.	Fuel Cell Tie Detail	3E12
9-13.	Fabrication of Test Fixture for Tank Unit Testing	3E17
9-14.	Test Equipment Hookup	3E18
9-15.	Test Cables for Tank Unit Testing (For TF-20, Only)	3E20
9-16.	Alternate Indicator Bench Test Hookup	3E20
9-16a.	Fuel Gauge Adjustment	3E21
9-17.	Fuel Vent System	3F1
10-1.	Instrument Panel Installation (Typical)	3F7
10-2.	Pitot-Static Installation	3F8
10-3.	Instrument Air System Installation	3F9
10-4.	Turn and Bank Vacuum System	3F15

LIST OF TABLES

Table		Aerofiche Grid No.
VIIIA-I.	Propeller Specifications	3A21
VIIIA-II.	List of Vendor Publications	3A21
VIIIA-III.	Troubleshooting Chart (Fuel Scavenger System)	3C14
VIIIA-IV.	Digital/Analog Torque Calibration Data	3C22
VIIIA-V.	Troubleshooting Chart (Engine)	3D3
IX-I.	Test Equipment	3E16
IX-II.	Scale Error Reading	3E20
IX-III.	Tank Unit Capacitance (Dry)	3E20
IX-IV.	Troubleshooting Chart (Fuel Gauging System)	3E22
IX-V.	Troubleshooting Chart (Fuel System)	3E23
X-I.	Pitot-Static System	3F20
X-II.	Airspeed Indicator	3F21
X-III.	Altimeter	3F22
X-IV.	Rate of Climb Indicator	3F23
X-V.	Magnetic Compass	3F24
X-VI	Pneumatic System Pressure Gauge	3G1
X-VII.	Engine Oil Pressure Gauge (Wet Direct Reading and Electric)	3G1
X-VIII.	Fuel Pressure Gauge (Wet Direct Reading and Electric)	3G2
X-IX.	Attitude Gyro (Electric)	3G2
X-X.	Directional Gyro (Electric)	3G3
X-XI.	Turn and Bank Indicator	3G4
X-XII.	Air Temperature Gauge	3G5
X-XIII.	Voltmeter	3G5
X-XIV.	Fuel Quantity Gauge	3G5
X-XV.	Fuel Flow Gauge	3G6
X-XVI.	Oil Temperature Gauge	3G6
X-XVII.	Engine Torque Gauge	3G7
X-XVIII	Inter-Turbine Temperature Gauge	3G8
X-XIX.	Tachometer (Propeller)	3G8
X-XX.	Engine Hour Recorder	3G9
X-XXI.	Annunciator Display	3G9

LIST OF CHARTS

Chart		Aerofiche Grid No.
8A-1.	Ground Adjustment Check Sheet	3C4
8A-2.	Fuel Flow (PA-31T2)	3C5
8A-3.	Gas Generator Speed (PA-31T2)	3C5
8A-4.	Torque (PA-31T2)	3C5
8A-5.	Inter-Turbine Temperature (PA-31T2)	3C6
8A-6.	1700 RPM Torque Setting (PA-31T2)	3C7
9-1.	Fuel Cell Repair Equipment Lists	3D24

SECTION VIIIA
POWER PLANT
PA-31T2

Paragraph		Aerofiche Grid No.
8A-1.	Introduction	3A11
8A-2.	Description	3A11
8A-3.	Troubleshooting	3A12
8A-4.	Engine Cowling	3A12
8A-5.	Removal of Engine Cowling	3A12
8A-6.	Cleaning, Inspection and Repair of Engine Cowling	3A12
8A-7.	Installation of Engine Cowling	3A12
8A-8.	Engine Air Inlet Ice Protection System	3A13
8A-9.	Removal of Ice Deflector Door Transmission	3A13
8A-10.	Cleaning, Inspection and Repair of Ice Deflector Door	3A14
8A-11.	Installation of Ice Deflector Door Transmission	3A14
8A-12.	Adjustment of Engine Ice Protection System	3A14
8A-13.	Inlet Air Deicer Boot	3A14
8A-14.	Oil Cooler Exhaust Door	3A16
8A-15.	Removal of Oil Cooler Door Transmission	3A16
8A-16.	Cleaning, Inspection and Repair of Oil Cooler Door Transmission	3A16
8A-17.	Installation of Oil Cooler Door Transmission	3A17
8A-18.	Adjustment of Oil Cooler Door	3A17
8A-19.	Propeller	3A17
8A-20.	Removal of Propeller	3A17
8A-21.	Cleaning, Inspection and Repair of Propeller	3A18
8A-22.	Installation of Propeller	3A18
8A-23.	Propeller Adjustments	3A21
8A-24.	Propeller Governors	3A22
8A-25.	Removal of Propeller Constant Speed Governor	3A22
8A-26.	Installation of Propeller Constant Speed Governor	3A22
8A-27.	Constant Speed Governor Adjustments	3A22
8A-28.	Propeller Overspeed Governor	3A23
8A-29.	Removal of Propeller Overspeed Governor	3A23
8A-30.	Installation of Overspeed Governor	3A23
8A-31.	Overspeed Governor Operational Checks	3A23
8A-32.	Engine	3A24
8A-33.	Engine Removal	3A24
8A-34.	Engine Buildup	3B1
8A-35.	Engine Installation	3B5

Paragraph		Aerofiche Grid No.
8A-36.	Engine Controls	3B5
	8A-37. Condition Lever	3B5
	8A-38. Rigging Condition Lever	3B6
	8A-39. Ignition Cutoff Switch	3B6
	8A-40. Adjustment of Ignition Cutoff Switch	3B6
8A-41.	Propeller Pitch Control Lever	3B6
	8A-42. Rigging Propeller Pitch Control Lever	3B6
8A-43.	Power Lever	3B6
	8A-44. Rigging the Power Lever	3B6
	8A-45. Rigging the Fuel Control Unit to the Fuel Control Actuating Lever	3B8
8A-46.	Rigging Throttle Control Cable to the Power Lever Arm	3B13
8A-47.	Beta Valve Rigging Procedure	3B13
8A-48.	Low Pitch Stop Switch Adjustment	3B13
8A-49.	Rigging of Propeller Governor Interconnecting Rod to Propeller Push-Pull Cable	3B14
8A-50.	Rigging the Push-Pull Cable to Cam Box	3B14
8A-51.	Propeller Reverse Switch Adjustment	3B14
8A-52.	Deleted	
8A-53.	Throttle Control Cable Handling and Storage (Power Lever)	3B15
8A-54.	Throttle Control Cable Removal and Installation (Power Lever)	3B15
8A-55.	Pre-Run Rigging and Adjustment of Power Control (Airframe to Engine Interconnect)	3B16
	8A-56. Engine Depreservation	3B16
	8A-57. Engine Motoring Run	3B17
	8A-58. Engine Ground Check and Safety Precautions	3B17
	8A-59. Engine Idle and Power Adjustments	3B18
8A-60.	Engine Ground Testing	3C1
	8A-61. Part Power Trim Check	3C1
	8A-62. Engine Overtemperature and Overtorque Limits	3C2
	8A-62a. Engine Ground Performance Check	3C2
8A-63.	Engine Shock Mounts	3C9
	8A-63a. Inspection of Mount Assemblies	3C9
	8A-63b. Cleaning Mount Assemblies	3C9
	8A-64. Replacement of Shock Mounts	3C9
8A-65.	Engine Fire Seals	3C9
	8A-66. General	3C9
8A-67.	Engine Fuel System	3C10
	8A-68. General	3C10
8A-69.	Fuel Control Unit	3C10
	8A-70. Removal of Fuel Control Unit	3C10
	8A-71. Preparation for Shipping	3C10
	8A-72. Preparation for Service	3C10
8A-73.	Installation of Fuel Control Unit	3C11
	8A-74. Fuel Control Unit Checks and Adjustments	3C11
	8A-75. Fuel Control Pneumatic (P3) Filter Maintenance	3C11
	8A-76. Fuel Manifold Adapter Removal and Installation	3C11
	8A-76a. Fuel Nozzle Adapter Inspection	3C12
	8A-77. Functional Check of Fuel Manifold Assemblies	3C12
8A-78.	Fuel Scavenger System	3C13

Paragraph		Aerofiche Grid No.
8A-79.	Ignition System	3C14
8A-80.	General	3C14
8A-81.	Checking Ignition System	3C16
8A-82.	Ignition Cutoff Switch Removal and Installation	3C17
8A-83.	Ignition Cutoff Switch Adjustment	3C17
8A-84.	Igniter Plug Cleaning and Inspection	3C18
8A-85.	Lubrication System	3C18
8A-86.	General	3C18
8A-87.	Oil Cooler	3C18
8A-88.	Removal of Oil Cooler	3C18
8A-89.	Installation of Oil Cooler	3C19
8A-90.	Oil Filter Element Removal and Installation	3C19
8A-91.	Cleaning Procedures for Cleanable Filter Elements	3C20
8A-92.	Bleed Air System	3C20
8A-93.	General	3C20
8A-94.	Engine Indicating Systems	3C21
8A-95.	Digital/Analog Torque Indicating System	3C21
8A-96.	General	3C21
8A-97.	Calibration Test	3C21
8A-98.	Inter-Turbine Temperature Sensing System (ITT)	3C23
8A-99.	General	3C23
8A-100.	Resistance Check of Inter-Turbine Temperature System	3C23
8A-101.	Inter-Turbine Temperature Calibration Check	3C23
8A-102.	Tachometer-Generators (Propeller and Gas Generator)	3C23
8A-103.	General	3C23
8A-104.	Removal and Installation	3D1
8A-105.	Engine Condition Trend Monitoring System	3D2
8A-106.	Engine Wiring Harness 500 Hour Inspection	3D2

SECTION VIIIA
POWER PLANT
PA-31T2

8A-1. INTRODUCTION. The purpose of this section is to provide service instructions for the power plant installation and its related components. The maintenance concept of this section is supplemental to Pratt and Whitney's Engine Maintenance Manual (refer to Table VIIIA-II for appropriate manual) and consists of removal, installation, and adjustments of external components and engine accessories. Repairs beyond this level should be accomplished by an approved Pratt and Whitney Aircraft of Canada Ltd. overhaul facility. The instructions are organized so the mechanic can refer to: Description, for a basic understanding of the power plant and its various components: Troubleshooting, for a methodical approach in locating the difficulty; and Removal, Installation, and Adjustment instructions to aid the mechanic when servicing the aircraft power plants.

In the interest of maintaining the efficient engine performance, an Engine Condition Trend Monitoring System has been set up by Pratt and Whitney Aircraft of Canada Ltd. This is not a mandatory procedure, but is highly recommended by Pratt and Whitney Aircraft of Canada Ltd. and Piper Aircraft Corporation. The use of this procedure will establish a means by which the engine condition can be observed without actual teardown of components, until conditions warrant it. Copies of the procedure can be obtained from Pratt and Whitney Aircraft of Canada Ltd.; Refer to the latest revision of Aircraft Gas Turbine Operation Information Letter #15.

8A-2. DESCRIPTION. The Piper Cheyenne is powered by two lightweight, free turbine Pratt and Whitney PT6A turboprop engines, for leading particulars refer to Section II.

The engines are completely enclosed by cowlings consisting of an upper and lower section of cantilever construction attached at the firewall. A hinged door on the upper cowls allows access to the oil filler neck and quantity dipstick. The air inlet ice deflector door is an integral part of the lower cowl assembly.

A compressor wash ring is offered as optional equipment. When installed, routine compressor washes may be performed, without the removal of the cowling, through an access door located on the outboard side of the nacelle

The propeller installations are constant speed, full feathering, reversing type, controlled by engine oil pressure through single-acting propeller governors. Centrifugal counterweights assisted by a feathering spring move the blades toward the low rpm (high pitch) position and into the feather position. This movement is opposed by oil pressure controlled by the propeller governor. Oil pressure moves the propeller to the high rpm (low pitch) hydraulic stop and reverse position. The propellers have no high pitch stop; this allows the propeller to feather after engine shutdown.

The engine lubricating system is a pressure type with the main oil pump located in the oil tank. The oil tank is an integral part of the compressor inlet case.

The fuel control system consists of a single engine driven pump, a fuel control unit, with fuel shutoff, and a dual fuel manifold with seven nozzles per manifold. An automatic fuel dump valve and two combustion chamber drain valves are provided to insure drainage of residual fuel after engine shutdown. A scavenger pump system collects residual fuel after engine shutdown and injects the fuel back into the aircraft fuel tank during engine start.

The ignition system consists of one exciter box, two ignition leads, and two spark igniters for each engine which require about 8000-volts to spark. Ignition is by both igniters simultaneously; there is no provision for single igniter operation.

The engine is also equipped with a 28-volt, 200 amp starter-generator, hydraulic pump, power section tachometer generator, gas generator tachometer generator, and an air bleed system which provides high pressure air for cabin pressurization. The complete engine assembly is supported on a tubular steel mount attached at the fire wall.

8A-3. TROUBLESHOOTING. Troubles concerning the power plant are listed in Table VIIIA-V in the back of this section along with their probable causes and suggested remedies. Before attempting to locate the difficulty, consult all available sources for any pertinent information which might assist in diagnosing the trouble.

NOTE

For additional information regarding troubleshooting of the engine, refer to Table VIIIA-II for appropriate Pratt and Whitney Engine Maintenance Manual.

NOTE

Special tools referred to in the following service information are available through the Piper Service Department, or may be fabricated locally from information supplied with the text.

8A-4. ENGINE COWLING.

8A-5. REMOVAL OF ENGINE COWLING. (Refer to Figure 8A-1.) The procedure for removing the engine cowling is the same for either engine.

a. Disconnect the strip assemblies (6) and (8) and the louver assembly (9) that connect the upper and lower cowl halves.

b. Remove the fasteners connecting the starter-generator cooling duct (13) to the upper cowl.

c. Disconnect the fasteners securing the upper cowl to the nacelle and remove the upper cowling.

d. To remove the lower cowl, remove the access plate (12) and disconnect the rod (2) from the ice deflector door. Disconnect the wire leads from the limit switches (3) and the deicer boot (5).

e. Remove the fasteners connecting the intercooler air inlet duct to the lower cowl.

CAUTION

To insure against possible damage to the lower cowl and deicer boot leads, support the lower cowl before proceeding with Step f below.

f. Disconnect the fasteners securing the lower cowl to the nacelle and remove the cowl from the aircraft.

8A-6. CLEANING, INSPECTION AND REPAIR OF ENGINE COWLING.

a. Clean the cowling with a suitable solvent and wipe with a clean cloth.

b. Inspect the cowling for dents, cracks, loose rivets, damaged or missing fasteners.

c. Repair all defects to prevent further damage. Fiberglass repair may be accomplished by using procedures listed in Fiberglass Repairs, Section IV.

8A-7. INSTALLATION OF ENGINE COWLING. (Refer to Figure 8A-1.) The procedure for installing the cowl is the same for either engine.

a. Position and support the lower cowl in place and secure the cowl to the nacelle with fasteners along the aft section of the cowl.

b. Connect the rod (2) to the ice deflector door and install the access plate (12).

c. Connect the electrical leads to the respective leads on the limit switches (3) and deicer boot (5). Reconnect the intercooler air inlet duct.

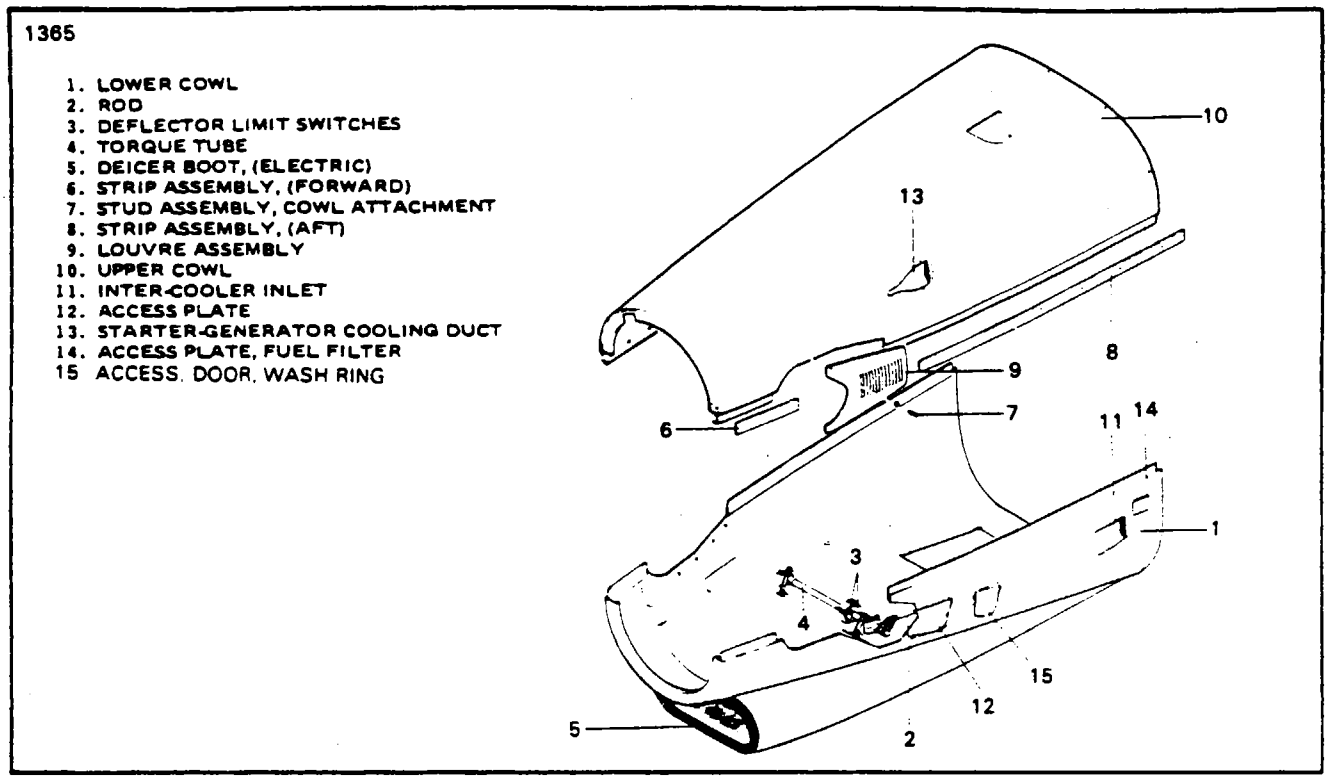

Figure 8A-1. Engine Cowling

d. Postion the upper cowl half in place and connect the starter-generator cooling duct (13) to the upper cowl. Connect the fasteners along the aft section of the cowl.

e. Secure the strip assemblies (6) and (8) and louver assembly (9)

f. Check the cowling and attachment hardware for security.

8A-8. ENGINE AIR INLET ICE PROTECTION SYSTEM.

8A-9. REMOVAL OF ICE DEFLECTOR DOOR TRANSMISSION. (Refer to Figure 8A-2.) To remove the transmission from the aircraft, the following procedure may be used:

NOTE

To facilitate removal, ascertain that the ice door and transmission are in the closed position.

a. Remove the engine cowling per Paragraph 8A-5.

b. Disconnect the electrical leads from the transmission assembly.

c. Disconnect the transmission clevis end from the torque tube assembly.

d. Disconnect the transmission from the fire wall mounting bracket and remove the complete assembly from the engine compartment.

8A-10. CLEANING, INSPECTION AND REPAIR OF ICE DEFLECTOR DOOR. Refer to Transmission Figure 8A-2.

a. Remove the engine cowling per Paragraph 8A-5.

b. Clean transmission assembly with a suitable solvent.

c. Inspect the transmission screw shaft (24) for back lash by the following procedure.

1. Disconnect transmission from Ice Deflector Door torque tube lever (10).

2. Clamp a pliers (vise grips) using light pressure on the transmission screw shaft (24). Refer to figure 8A-2.

3. Move the pliers to rotate the screw shaft. A slight movement should be felt, but not to exceed .312 (5/16) of an inch on a 6 inch radius from the shaft.

d. Check transmission sleeve (13), screw shaft (24), and rod end (26) for distortion.

e. Check brake solenoid assembly (27) for any excessive wear, broken parts, and sticking or burned out solenoid

f. After the transmission screw shaft and sleeve have been cleaned and dried, a coating of Aircraft Actuator Grease, MIL-G-23827 Specification, should be applied to the transmission screw shaft

g. When the transmission assembly is disassembled for any reason, it should be repacked, 75 percent full with Dukes grease (P/N 2196-74-1).

8A-11. INSTALLATION OF ICE DEFLECTOR DOOR TRANSMISSION. (Refer to Figure 8A-2.)

NOTE

To facilitate installation, ascertain that the ice door and transmission are in the closed position.

a. Position the transmission assembly on the fire wall mounting bracket and secure with the proper attachment hardware. Allow the transmission to rotate on its mounting bolt.

b. Attach the transmission clevis to the torque tube with the proper clevis pin, washers and cotter pin

c. Connect the electrical leads to the transmission assembly.

d. Check the adjustment per Paragraph 8A-12.

8A-12 ADJUSTMENT OF ENGINE ICE PROTECTION SYSTEM.

a. Remove the vane interconnect rod.

b. Make a template of aluminum or suitable material to insure the No. 1 vane is held at 24 degrees ± 1 degree.

c. Adjust forward micro switch contact screw to trigger the switch at the 24 degree vane position.

d. Adjust the rear micro switch contact screw to trigger the switch at the vane up position (flush with the upper surface of inlet duct).

e. Run the extension motor to full vane down position. While holding the vane at the point where the micro switch just makes contact (down position), adjust the interconnect rod to allow the pin to just slip into position.

f. Retract the vane.

g. Remove the pin and increase the length of interconnect rod by extending each rod end three full turns.

h. Reconnect the pin.

i. Test run the system and recheck the vane up and vane down positions.

j. With vane down, turn the vane up limit switch contact screw in one full turn.

8A-13. INLET AIR DEICER BOOT. Refer to Section XIV for information regarding the air inlet deicer boot.

1366

1. DEICER LIP, ENGINE AIR SCOOP
2. HINGE, DEFLECTOR ASSEMBLY
3. ICE DEFLECTOR DOOR
4. BLOCK ASSEMBLY
5. ARM ASSEMBLY (2 REQ)
6. TORQUE TUBE ASSEMBLY
7. LIMIT SWITCHES
8. FIRE SHIELD
9. HINGE, DOOR ASSEMBLY
10. ARM ASSEMBLY (1 REQ)
11. ROD ASSEMBLY, ICE DUMP DOOR
12. ARM ASSEMBLY (2 REQ)
13. TRANSMISSION SLEEVE
14. FIRE WALL
15. BOLT ASSEMBLY, TRANSMISSION MOUNTING
16. MOTOR, TRANSMISSION
17. ROD
18. TORQUE TUBE ASSEMBLY
19. BYPASS DOOR
20. ROD ASSEMBLY
21. PIN
22. BOLT ASSEMBLY (2 REQ)
23. LINK ASSEMBLY
24. TRANSMISSION SCREW SHAFT
25. CLAMP PLIERS
26. ROD END
27. BRAKE SOLENOID

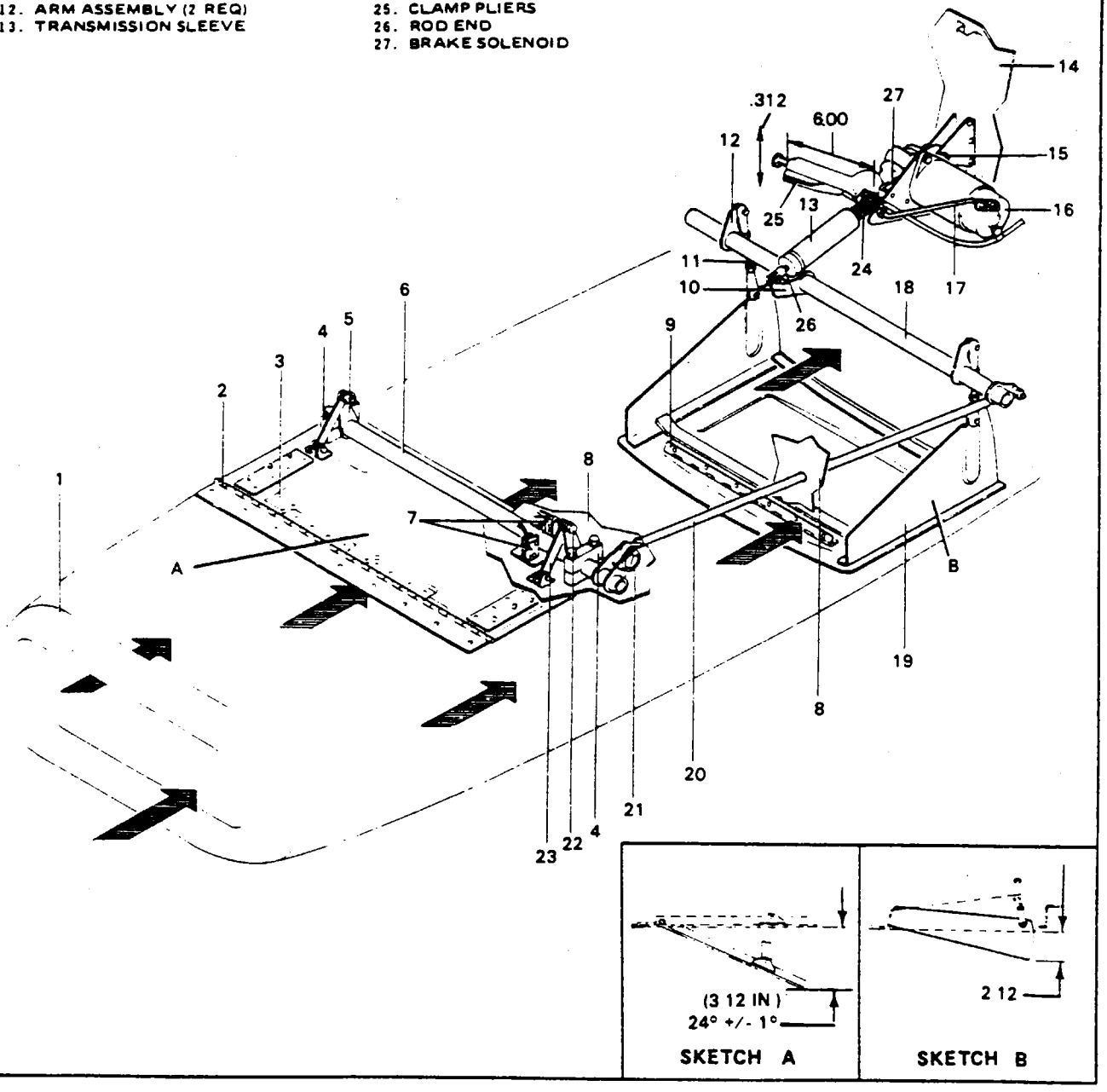

Figure 8A-2. Engine Air Inlet Ice Protection System

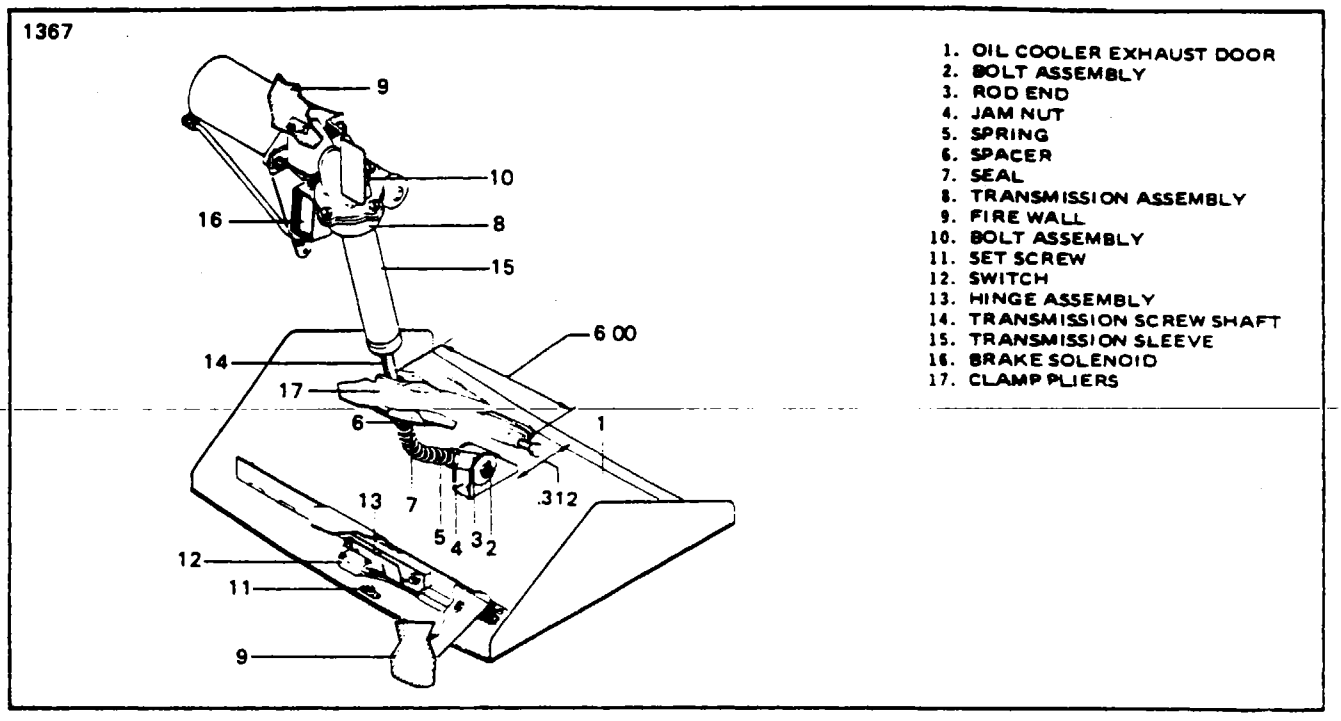

Figure 8A-3. Oil Cooler Door Installation

8A-14. OIL COOLER EXHAUST DOOR

8A-15. REMOVAL OF OIL COOLER DOOR TRANSMISSION (Refer to Figure 8A-3)

a. Remove the access panels on the nacelle to gain access to the transmission assembly

b. Extend the oil cooler door to its full open position.

c. Disconnect the electrical leads from the transmission and motor assembly.

NOTE

In some manner identify the leads to facilitate installation.

d. Disconnect the transmission rod from the oil cooler door and remove the sleeve, jam nut, spring, spacer, and seal from the transmission rod.

e. Disconnect the transmission from the fire wall mounting bracket and remove the complete assembly from the aircraft.

8A-16. CLEANING, INSPECTION AND REPAIR OF OIL COOLER DOOR TRANSMISSION.

a. Remove access panel on top of engine nacelle.

b. Position oil cooler door in the open position by activating the switch in the over head panel.

c. Clean the transmission assembly with a suitable solvent.

d. Inspect the transmission screw shaft (14) for back lash by the following proceedure

1. Disconnect transmission from Oil Cooler Door.

2. Clamp a pliers (vise grips) using a light pressure on the transmission screw shaft (14). Refer to Figure 8A-3.

3. Rotate the screw shaft by moving the pliers. A slight movement should be felt, but not to exceed .312 (5/16) of an inch on a 6 inch radius from the shaft.

e. Check transmission sleeve (15), screw shaft (14), and rod end (3) for distortion.

f. Check brake solenoid assembly (16) for any excessive wear, broken parts, and sticking or burned out solenoid.

g. After the transmission screw shaft and sleeve have been cleaned and dried, a coating of Aircraft Actuator Grease (MIL-G-23827) should be applied to the transmission screw shaft.

h. When the transmission assembly is disassembled for any reason, it should be repacked 75 percent full with Dukes grease (P/N 219674-1).

8A-17. INSTALLATION OF OIL COOLER DOOR TRANSMISSION. (Refer to Figure 8A-3)

a. Position the transmission assembly in the mounting bracket with the rod protruding through the oil cooler duct and secure with the proper attachment hardware. Allow the transmission to rotate on its mounting bracket

b. Connect the electrical leads to the transmission assembly

c. Place the seal, spacer, and spring on the transmission rod Screw the jam nut and sleeve on the rod

d. Connect the transmission rod to the oil cooler door with the attachment hardware

e. Adjust the oil cooler door per Paragraph 8A-18

8A-18. ADJUSTMENT OF THE OIL COOLER DOOR. (Refer to Figure 8A-3.)

a. Adjust the sleeve on the transmission rod so the oil cooler door is flush with the bottom of the nacelle in the fully closed position.

b. Adjust the set screw on the oil cooler door to activate the limit switch just before the door is fully open

c. Check all attachment hardware for proper installation and security

d. Check the operation of the oil cooler doors and indicator lights through a complete opening and closing cycle

8A-19 PROPELLER

8A-20 REMOVAL OF PROPELLER (Refer to Figure 8A-4)

a. Remove the spinner by removing the attachment screws that secure the spinner to the spinner bulkhead

b Remove the engine cowling (Refer to Paragraph 8A-5.)

c. Remove the deicer brush block assembly. Use caution to avoid damaging the brushes

d Disconnect and remove the propeller reversing lever and carbon block from the feedback ring

e Install the feedback ring puller P N 51519 and pull the feedbck ring fully forward Use a standard 5 8 inch socket against the propeller hub (Refer to Figure 8A-9.)

CAUTION

Take the necessary precautions to avoid damaging the low stop rods and the feedback ring.

f. Remove the safety wire from the propeller mounting bolts and remove the bolts using the suggested wrench (P/N 51514-00)

g. Place a drip pan under the propeller to catch oil spillage.

h. Remove the propeller from the engine flange. Remove the O-ring and cap the flange to prevent contamination.

8A-21. CLEANING, INSPECTION AND REPAIR OF PROPELLER.

NOTE

Refer to the latest revision of Hartzell Propeller Service Letter No. 61 for Recommended Overhaul Periods under various conditions.

a. Check for oil and grease leaks.
b. Clean the spinner, propeller hub exterior, and blades with a non-corrosive solvent.
c. Inspect the hub parts for cracks.
d. Check all visible parts for wear and safety.
e. Inspect blades for damage or cracks. Nicks in the leading edges of blades sometimes provide the conditions that allow fatigue cracks to start, and should be filed out and all edges rounded. Use fine emery cloth for finishing. Refer to Figure 8A-5 for propeller blade care.
f. Check the condition of the propeller mounting bolts.
g. It is recommended that for severe damage, internal repairs and replacement of parts, the propeller should be referred to the Hartzell Factory or a certified repair station.
h. Each blade face should be sanded lightly and painted, when necessary, with a flat black paint to retard glare. A light application of oil or wax may be applied to the surfaces to prevent corrosion.
i. Check the condition of the low stop rods and feedback ring.
j. Grease blade hub through zerk fittings. Remove one of two fittings for each propeller blade; alternate the next time. Apply grease through the zerk fitting until fresh grease appears at the hole of the fitting removed. Care should be taken to avoid blowing out hub gaskets.

CAUTION

Do not attempt to rotate the propeller blades using blade arms, as damage will result to the feedback ring.

8A-22. INSTALLATION OF PROPELLER. (Refer to Figure 8A-4.)

a. Clean propeller and engine flanges.
b. Lubricate and install a new O-ring on the engine shaft.
c. Install feedback ring puller P/N 51519 and pull the feedback ring fully forward. Use a standard 5/8 inch socket against the propeller hub. (Refer to Figure 8A-9.)

CAUTION

Take the necessary precautions to avoid damaging the low stop rods (5) and the feedback ring.

d. Position the propeller on the engine flange and torque the propeller mounting bolts as follows:

NOTE

P/N B-3339 propeller attach bolts have the part numbers stamped inside the cupped head. These bolts require a 5/8 inch, 12-point socket head wrench. See Hartzell Service Instruction No. 140A.

1. Apply MIL-T-5544 or MIL-T-83483 Petrolated Graphite or Hartzell Lubricant P/N A-3338-( ) to bolt threads and bolt washer surfaces (and remainder of bolt if desired).
2. Install the eight B-3339 bolts and eight A 2048-2 washers through engine flange into propeller flange.
3. Torque all bolts to 40 ft.-lbs. and then to 80 ft.-lbs. following torque sequence "A" shown on Figure 8-4, Propeller Installation.
4. Final torque all bolts following torque sequence "B" shown on Figure 8-4 to 100 - 105 ft.-lbs.
5. Safety wire all bolts.

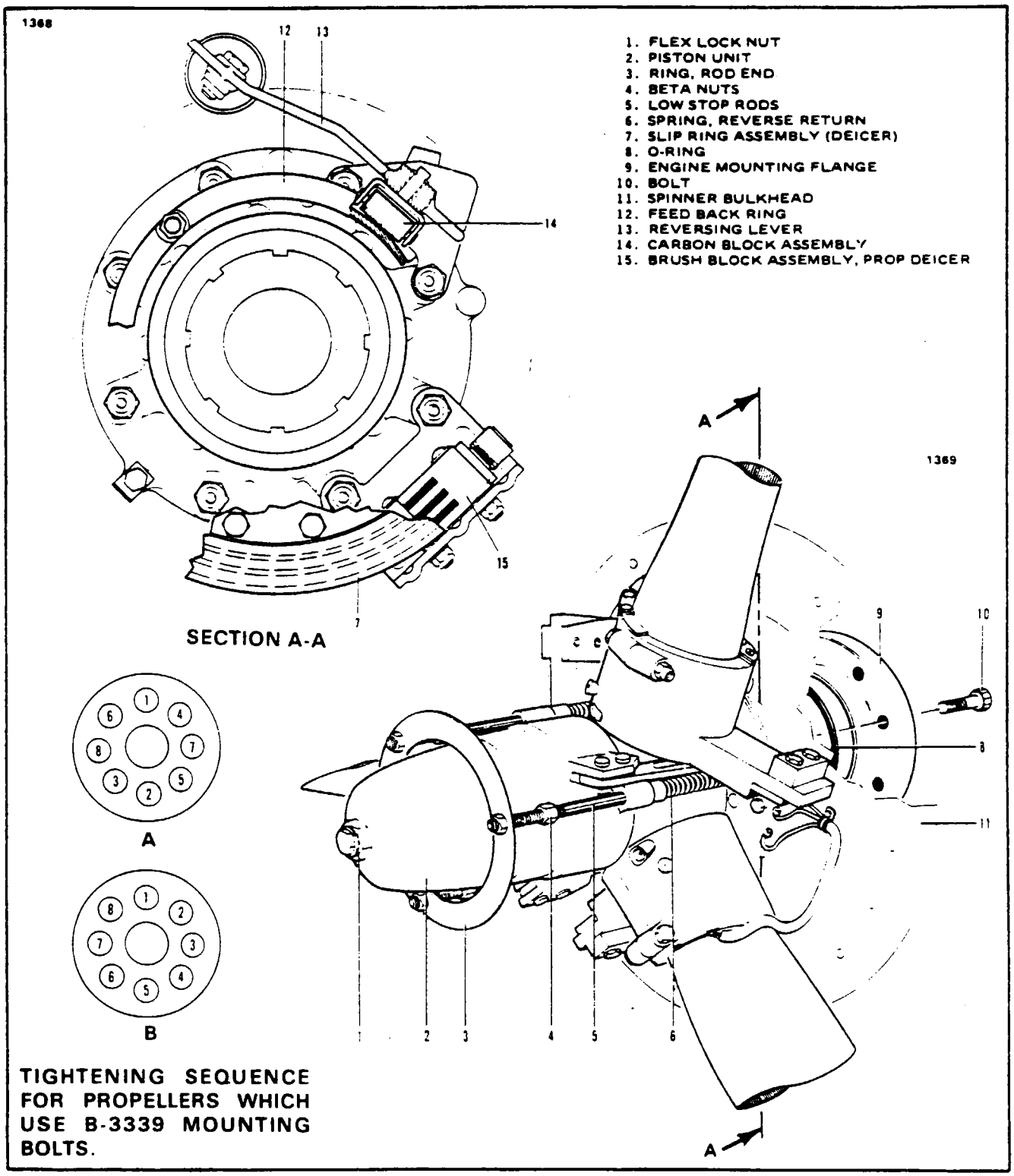

Figure 8A-4. Propeller Installation

e. Install the deicer brush block. (Refer to section XIV for brush alignment procedures.)
f. Install the propeller reversing lever with the carbon block in the feedback ring. (Refer to Figure 8-9.)

NOTE

Check this clearance by holding the carbon block against one face of the feedback ring. Use fine sandpaper on the block to obtain this clearance. Ascertain that the block is free to rotate in the reversing lever. (Refer to Figure 8-9.)

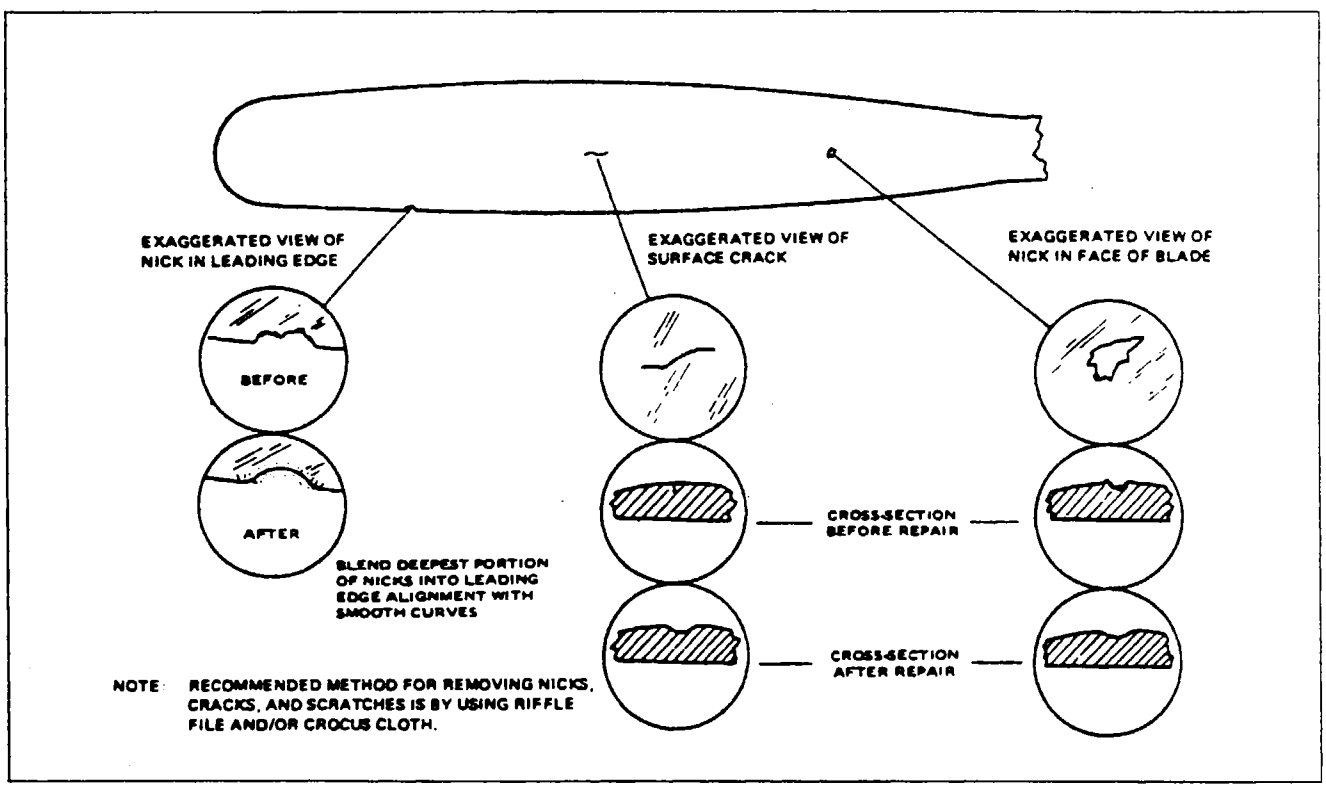

Figure 8A-5. Typical Nicks and Removal Method

TABLE VIIIA-I. PROPELLER SPECIFICATION

Hub, Model Blade, Model	HC-B3TN-3B T10173-HB8 or T10173-B8	
Propeller RPM Setting Beta Nut Setting	Engine Static High RPM @2000 RPM	2200 RPM max. 20.2 degrees
Propeller Torque Limits	Description Propeller Mounting Bolts (P/N B3339) Spinner Bulkhead Attachment Screws Spinner Attachment Screws Flex Lock (Dome) Nut Beta Ring Jam Nuts Low Pitch Stop, Propeller Nuts	Required Torque 100-105 ft.-lb. (Lubricated and tightened in stages - refer to text) 65-100 in.-lbs. 40 in.-lbs. 120 ft.-lbs. 12 ft.-lbs. 22 ft.-lbs.

TABLE VIIIA-II. LIST OF VENDOR PUBLICATIONS

MODEL	VENDOR	PART NUMBER
PA-31T2	Pratt and Whitney Engine Maintenance Manual Address: Pratt and Whitney Aircraft of Canada Limited, Box 10, Longueuil, Quebec, Canada	No. 3021242
PA-31T2	Engine Mounting Systems Address: Lord Aerospace Products 1635 West 12th Street Erie, Pennsylvania 16514	Lord Bulletin No. SM-6304

g. Rotate the propeller slowly and check the run out of the feedback ring with a dial indicator. Run out must not exceed .010 of an inch total indicator. If the run out is excessive, loosen the nut on the front of the low stop rods and the jam nut at the feedback ring; adjust the low pitch stop rods to obtain the front of the low stop rods to 22 foot-pounds.

h. Check the Beta valve rigging. Refer to Pre-Run Rigging Procedure.

i. Perform an engine ground check and check the 2000 rpm torque setting per appropriate Paragraphs in this section.

8-23. PROPELLER ADJUSTMENTS. Refer to appropriate paragraphs in this section for propeller and propeller control adjustments.

8A-24. PROPELLER GOVERNORS

8A-25. REMOVAL OF PROPELLER CONSTANT SPEED GOVERNOR.

a. Remove the upper engine cowling per Paragraph 8A-5.
b. Disconnect the electrical connections from the governor.
c. Disconnect the prop pitch control rod at the governor control lever.
d. Disconnect the pneumatic tube at the governor.
e. Remove bolt, washer, and nut connecting governor control arm to interconnecting rod.
f. Remove bolt, spacer, and nut which connect the control link to the propeller reverse lever.
g. Remove the clevis pin from the fork end of the Beta control valve.
h. Remove nuts and washers and withdraw governor from mounting pad. Remove gasket.

8A-26. INSTALLATION OF PROPELLER CONSTANT SPEED GOVERNOR.

a. Install gasket over studs on governor mounting pad with the raised side of screen facing up.
b. Install governor and secure with washers and self-locking nuts. Torque nuts 170 to 190 inch-pounds.
c. Connect fork end of Beta control valve to reversing lever with pin and secure with washers and cotter pin.
d. Secure fork end of control link to the propeller reversing lever with bolt, spacer, washer and nut. Torque nut 24 to 36 inch-pounds and secure with cotter pin.
e. Connect governor control arm to interconnecting rod with bolt, washer and nut. Torque nut 25-35 inch-pounds and secure with cotter pin.
f. Connect the pneumatic tube at the governor; torque coupling nut 90 to 100 inch-pounds and lockwire.
g. Connect and secure electrical connections to the governor.
h. Connect the prop pitch control rod to the governor control lever.
i. Check the governor adjustments per Paragraph 8A-27.
j. Reinstall the engine cowling.

8A-27 CONSTANT SPEED GOVERNOR ADJUSTMENTS. (Refer to Figures 8A-8 and 8A-11.) After repair or replacement of the propeller governor, the adjustments must be checked as follows.

a. With the engine static, disconnect the front air pressure tube at the governor connection and blank off nipple and pneumatic line with suitable caps.
b. Perform the pre-start check. (Refer to Paragraph 8A-58, Steps a thru c.)
c. Start the engine (refer to Paragraph 8A-58, Steps d thru f), and allow it to warm up in the idle setting until normal operating oil temperature is reached, 75°C (165°F) minimum.
d. Advance the power control lever to obtain 80% Ng, and perform two feathering cycles to purge air from the system. To reduce feathering time, turn feathering adjuster (5, of Figure 8A-11) counterclockwise.

NOTE

Two complete turns (counterclockwise from the nominal setting) is the maximum permitted adjuster range.

e. Set propeller control lever in fine pitch, and advance the power control lever sufficiently to allow the propeller to constant speed. Temporarily mark the position of the lever on the quadrant and record Ng.
f. Loosen the locknut and adjust the governing maximum speed adjuster (1, of Figure 8A-11) to obtain the desired Np Counterclockwise rotation of screw increases speed. Tighten the locknut when adjustment is completed

g. Record Np, torque and fuel flow.

h. Shutdown the engine and reconnect the front air pressure tube at the governor. Torque 90 to 100 inch-pounds, and restart the engine.

CAUTION

Do not disturb the pneumatic maximum adjustment (2, of Figure 8A-11.)

i. Advance the power lever to position previously marked, and compare Ng with figure previously recorded. If Ng has changed from previous value, recheck that the air bleed ink (27, Figure 8A-8) is locked hard against the pneumatic maximum stop (28, of Figure 8A-8). Note that an Ng change of up to 100 rpm is acceptable, but if the change is above this, replace the propeller governor.

j. Shutdown the engine. Disconnect the interconnect rod (22, Figure 8A-8) at the bleed air link and secure link to minimum stop.

k. Restart and run engine. With the propeller control lever set in fine pitch, advance the power control lever sufficiently to obtain a constant speed condition and check that Np governs at 95% + 1% of maximum speed set up in Step (f). Adjust the pneumatic minimum eccentric adjuster (3, of Figure 8A-11), as necessary to meet this requirement.

l. Shutdown the engine and reconnect the air bleed link (27, of Figure 8A-8) to the interconnect rod (22, of Figure 8A-8).

m. Restart the engine and check the reverse power setting.

8A-28 PROPELLER OVERSPEED GOVERNOR.

8A-29. REMOVAL OF PROPELLER OVERSPEED GOVERNOR.

a. Remove the engine cowling.

b. Disconnect the electrical leads from the overspeed governor

c. Remove the nuts and washers securing the overspeed governor to the reduction gearbox and withdraw the assembly from the mounting studs. Discard the mounting gasket.

d. Examine the overspeed governor drive for damage and wear; replace if necessary.

8A-30. INSTALLATION OF OVERSPEED GOVERNOR.

a. Install a new mounting gasket over the studs.

b. Install the overspeed governor on the mounting pad; be certain the drive shaft is properly engaged. Secure with washers and self-locking nuts; torque to 125 to 170 inch-pounds

c. Connect the electrical leads to the overspeed governor.

d. Check the overspeed governor operation per Paragraph 8A-31.

e. Reinstall the engine cowling

8A-31. HYDRAULIC TOPPING GOVERNOR (HTG) OPERATIONAL CHECKS. Check the operation of the overspeed governor as follows:

a. Start the engine and allow it to stabilize.

b. With the power lever in idle, move the prop control lever to full increase/forward.

c. Set the power lever to 1450 RPM.

d. Push the HTG switch up and observe a drop in prop speed to 1330 RPM.

e. Release the switch and check the prop speed to make sure it returns to 1450 RPM

8A-32. ENGINE. For detailed information concerning the following items refer to Table VIIIA-II for appropriate Pratt and Whitney Engine Maintenance Manual.

a. Engine - General
b. Reduction Gear and Shaft Section
c. Air Inlet Section
d. Compressor Section
e. Combustion Section
f. Turbine Section
g. Accessory Drives

8A-33. ENGINE REMOVAL. (Refer to Figure 8A-6.) The removal of either engine is basically the same except for the routing of some wires, cables and lines. Remove the engine as follows:

a. Place a tail stand under the aircraft.
b. Turn off all cockpit switches and disconnect battery.
c. Move the fuel shutoff valve to the off position.
d. Remove the engine cowling per Paragraph 8A-5.
e. Remove the access panels on the top and sides of the nacelle.
f. Drain the engine oil. (Refer to Section II.)
g. Remove the propeller per Paragraph 8A-20.
h. Disconnect all fluid hoses, clamps, and electrical leads attached to the engine and engine mount from the fire wall.

NOTE

In some manner identify disconnected items and mark all clamp locations to facilitate installation.

i. Remove the fire extinguisher system (if installed). (Refer to Section XIV.)

WARNING

Use caution when working with the fire extinguisher system Accidental discharge may cause bodily injury.

j. Disconnect oil cooler lines at engine and cap lines.

NOTE

The oil cooler system remains attached to the fire wall and the ice protection system is removed with the lower cowling.

k. Disconnect and remove the rear top left and top right fire seals from the engine
l. Disconnect all drain lines attached to the engine, and the fuel lines attached to the scavenge pump.
m. Disconnect the power control cable from the fuel control unit actuating lever and remove the cable from the support bracket. Disconnect and remove the support bracket.

CAUTION

Do not bend the power control cable in the direction offering the greatest resistance; as damage will be done to the cable.

n Disconnect the starting control cable from the start control lever arm and remove the cable clamp from the cable support bracket. Disconnect and remove the support bracket.

o Disconnect propeller control cable from the propeller control rod. Remove cable clamps and draw the cable aft to the fire wall.

p. Attach lifting sling to the engine suspension points and using a one-half ton hoist, support the engine to allow the engine and mount to be disconnected from the fire wall.

q Swing the engine and mount free from the fire wall; check to be certain no attachments remain to obstruct its removal

CAUTION

Do not tilt engine more than 22 degrees, as with the engine static engine oil may contaminate the labyrinth oil seals resulting in increased oil consumption

r Move the engine away from the aircraft and place on a suitable stand

s Remove the accessories and equipment to be installed on the new engine and tag or identify all items removed to facilitate installation

NOTE

If the engine removed is expected to be inactive for a period of time, refer to the Pratt and Whitney Engine Maintenance Manual for the necessary preservation schedule.

8A-34 ENGINE BUILDUP Engine buildup consists of transferring the necessary accessories and equipment from the engine removed for overhaul to a new engine. Replace safety wire, lock washers, gaskets, and rubber hoses when needed to complete the engine assembly for installation in the aircraft

NOTE

Replacement engines must be purchased through the Piper Service Department to be compatible with the Piper installation. Refer to Section II, Table II-I. Leading Particulars for specific Rear Accessory drives for Right and or Left engines.

CAUTION

Refer to the Pratt and Whitney Engine Maintenance Manual before attempting to remove a new engine from the shipping container.

3B2

INTENTIONALLY LEFT BLANK

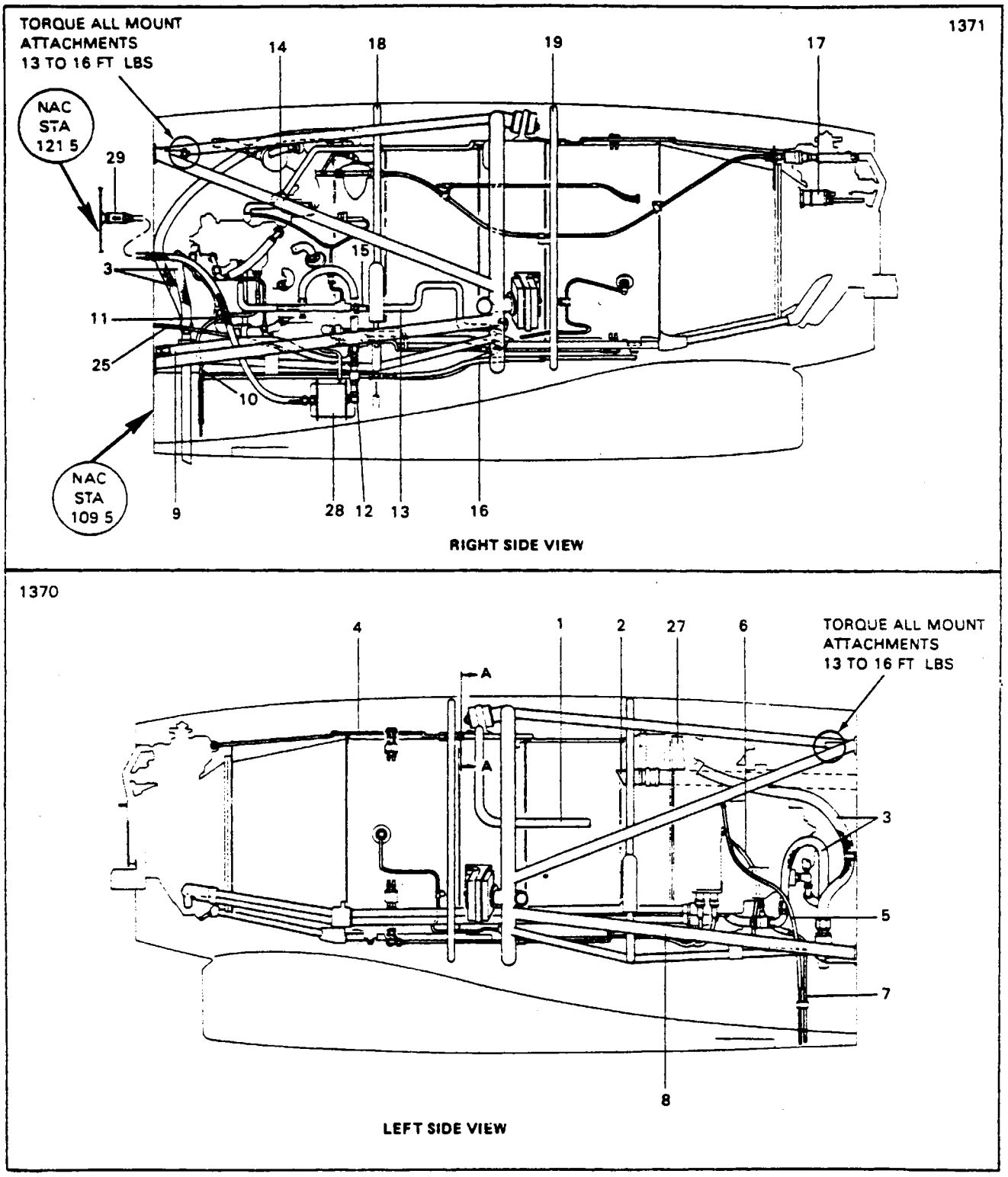

Figure 8A-6 Engine Installation (Typical)

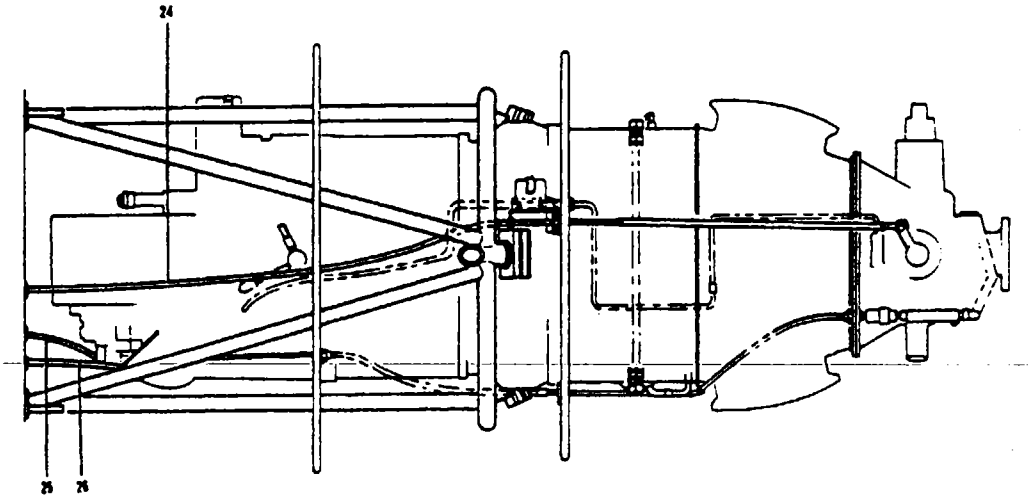

TOP VIEW

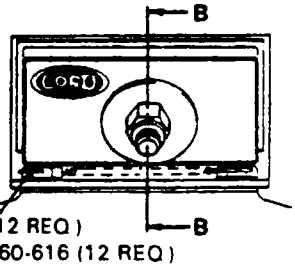

BOLT - 50615 (12 REQ)
WASHER - AN960-616 (12 REQ)
SAFETY WIRE - MS20995C41

SECTION A - A

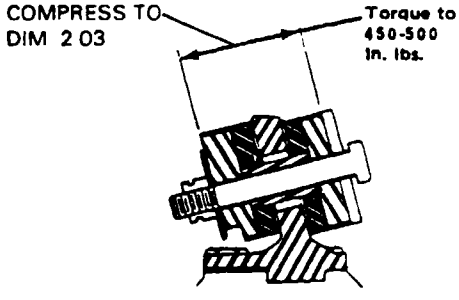

SECTION B - B

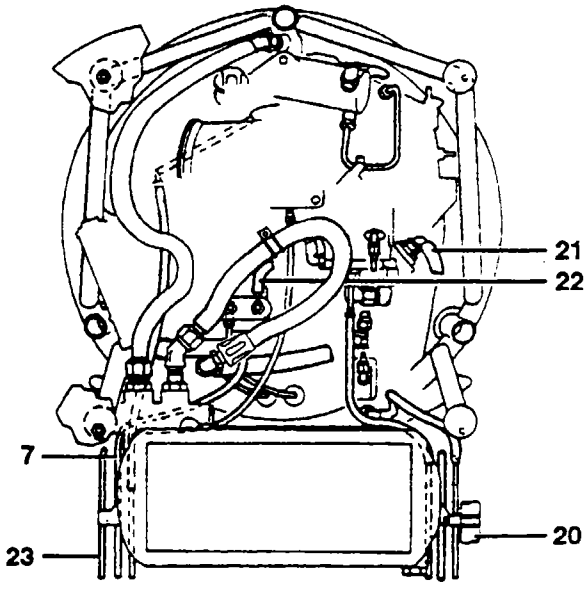

REAR VIEW

1. BLEED AIR PRESSURE
2. JET PUMP INLET DUCT
3. OIL COOLER HOSE
4. PROPELLER GOVERNOR AIR PRESSURE LINE (Py)
5. OIL DRIP SHIELD DRAIN
6. STARTER GENERATOR DRAIN
7. HYDRAULIC PUMP DRAIN
8. ENGINE MOUNT ASSEMBLY
9. OIL DRAIN
10. START CONTROL DRAIN
11. FUEL CONTROL DRAIN
12. SOLENOID VALVE
13. BREATHER LINE
14. P3 LINE
15. P3 FILTER
16. DRAIN LINE
17. TORQUE PRESSURE TRANSMITTER
18. REAR FIRE SEAL
19. FRONT FIRE SEAL
20. OIL BREATHER
21. OIL PRESSURE LINE
22. HYDRAULIC LINE
23. FUEL DRAIN
24. PROPELLER CONTROL CABLE
25. START CONTROL CABLE
26. POWER CONTROL CABLE
27. STARTER GENERATOR COOLING DUCT
28. SCAVENGER PUMP
29. UNION

Figure 8A-6. Engine Installation (Typical) (cont.)

8A-35. ENGINE INSTALLATION. The installation of either engine is basically the same except for the hookup and routing of some wires and lines. Before installing the engine, be certain all engine accessories are properly installed, torqued and safetied.

a. With the engine suspended from a one-half ton hoist, carefully swing the engine assembly in place. Use caution not to damage any engine components, plumbing and wiring.

b. Install the engine mount and torque the mounting bolts to value shown in Figure 8A-6, Section B-B.

c. Route and reconnect all previously disconnected fluid hoses, lines, and electrical leads from the fire wall to the respective connections on the engine and secure with the appropriate clamps.

d. Route the propeller control cable through the bracket and clamp assembly and reconnect to the propeller control rod.

e. Connect the start control cable to the start control lever arm and attach the cable clamp to the cable support bracket.

f. Connect the power control cable to the fuel control unit power lever.

g. Install the propeller per Paragraph 8A-22.

h. Adjust the engine and propeller controls. (Refer to Paragraph 8A-38.)

i. Reinstall the fire extinguisher system, if previously installed.

WARNING

Use extreme caution when working with the fire extinguisher; accidental discharge may cause bodily injury.

j. Refill the oil tank with the specified type and amount of oil.

k. Connect the battery.

l. Reinstall access plates on the engine nacelle.

m. Perform the post installation procedures.

n Check for fuel and oil leaks and security of the engine components.

8A-36. ENGINE CONTROLS.

8A-37 CONDITION LEVERS. Each condition lever controls its respective engine through the start control; and the fuel control unit by a link that interconnects the cam box with the start control With this design, each condition lever has three positions: STOP, which is the idle cut-off position; LOW IDLE, which operates the engine at 56%; and HIGH IDLE, which operates the engine at 65%. When in the STOP or idle cut-off position, the start control shuts off fuel to the flow divider/dump valve assembly which directs fuel to the primary and secondary fuel nozzles.

The condition levers also control ignition to their respective engines by a microswitch rigged to each lever Whenever a condition lever is in STOP, its microswitch is actuated causing the circuit to the ignition unit to be deactivated.

8A-38. RIGGING CONDITION LEVER.

a. Rig the lever by adjusting the cable end so the start control lever is against the stop in the run position. The cockpit control lever will have approximately 0.062 inches spring back.

b Pull the condition lever in the cockpit full aft and be certain the start control unit lever on the start control has reached its limits of travel in the idle cutoff position.

c. Check all jam nuts for security and control linkage attachment hardware for safety.

8A-39. IGNITION CUTOFF SWITCH. The ignition cutoff switches are located in the control pedestal and are activated by the start control lever.

8A-40. ADJUSTMENT OF IGNITION CUTOFF SWITCH.

a. Set the condition levers in the cutoff position.

b. With the adjustment screw on the switch bracket, adjust the switch toward the condition lever until the switch is actuated at 1 inch of forward travel of the condition lever. The adjustment screw may be reached by inserting a long screwdriver through the travel slot of the start control lever in the pedestal cover.

8A-41. PROPELLER PITCH CONTROL LEVER. The propeller control lever controls propeller pitch and propeller RPM through a constant speed governor located at the forward top of the engine reduction gear box.

8A-42. RIGGING PROPELLER PITCH CONTROL LEVER.

a. Adjust the pitch control lever so the governor control arm has contacted the high rpm stop and the pitch control lever has approximately 0.062 inches spring back. This is made by adjusting the pitch control rod end at the propeller governor.

b. Secure jam nuts and check attachment hardware for safety.

8A-43. POWER LEVER. The power lever cable is attached to the propeller cam box and fuel control through a power lever arm. The propeller cam is attached to the fuel control through a fuel control unit interconnect rod. The propeller cam is also attached to the beta valve and propeller governor through this push/pull control.

CAUTION

When you are performing any maintenance on the power lever, remember to disconnect the reversing linkage either at forward clevis attachment or at the rear clevis attachment on the propeller cam

This will prevent damage to the reversing linkage in the event that you have to place the power levers in reverse range with the engine not running.

8A-44. RIGGING THE POWER LEVER. (Refer to Figure 8A-8.)

a. Remove the clevis pin attaching the wire rope to the cam lever.

b. Remove the bolts holding the power lever cable to the input arm (17) and fuel control interconnect rod (9)

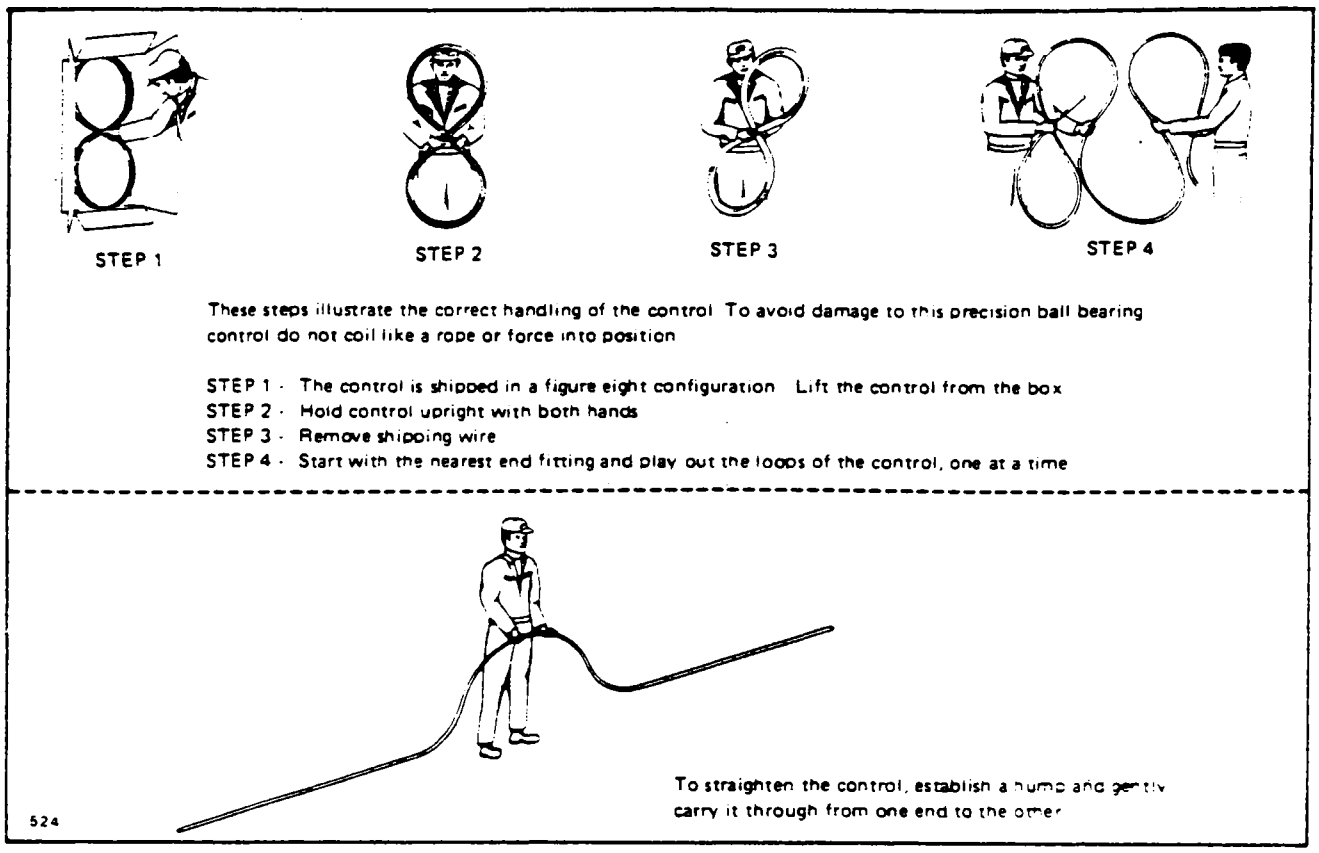

Figure 8A-7. Throttle Control Cable Handling Procedure

c. Establish the track point by moving the follower pin rearward in the cam slot until the cam just starts to move rearward, then move the follower pin forward until the cam stops moving

d. While holding the track point position, insert tool P/N 51516 behind the cam onto the pin and hold the cam and tool in position with a small pair of vise grip pliers.

NOTE

Install the pliers tight enough to hold everything from moving, but not tight enough to damage the cam.

Use of a dial indicator to sense Beta Cam movement may be an aid to establishing track point

e Install rigging template (P/N 51518) with locator pin assembly (P/N 51513). (Refer to Figure 8A-8.)

f When rigging the input arm on the pivot pin, first remove the spline imprints on the inside of the input arm clamp

NOTE

When installing an input arm make certain both engines have the same length lever (Refer to the Parts Catalog.)

g. Position the power lever input arm (17) 90 degrees from the pivot pins. (Refer to Figure 8A-8, Sketch A.) Place bolt through lower end of arm and lock in place.

NOTE

As you tighten the lock bolt, keep checking the arm to assure that it has not moved and do not put too much force on the bolt as you may push or pull the vise grip pliers loose and you will have to start all over again with track point set-up.

It is very important that the input arm be securely locked on the shaft to prevent it from rotating on the shaft during engine operation.

8A-45. RIGGING THE FUEL CONTROL UNIT TO THE FUEL CONTROL ACTUATING LEVER.

NOTE

Cam box must be at "Track Point" for this adjustment and whenever the engine is being rigged.

a. Install Beta Rigging template (P N 51518) and locator pin (P N 51513).

b. Remove the interconnecting rod and rotate fuel control unit input arm (7) fully counterclockwise and then slowly clockwise until the fuel governor cam pick-up point is felt. This point must be 22.5 degrees ± 0.6 degrees indicated on the template. (Refer to Figure 8A-8.)

NOTE

Initial movement of the fuel control unit input arm from the fully counterclockwise position is free from resistance until a pick-up point is recognized when a slight resistance is felt.

c. If the fuel control unit input arm (7) must be adjusted, unsafety the fuel control unit input arm extension (8) and loosen the arm. Rotate the serrated washer (6) on the fuel control unit and fuel control arm to obtain the proper rigging.

NOTE

The inner serrated increments are 15 degrees and the outer serrated increments are 14.4 degrees giving an adjustment in increments of 0.6 degrees.

d. Adjust the length of the fuel control unit interconnect rod (9) so that when the fuel control unit input arm (7) is at the 22.5 degree position the rod end bearing of the fuel control unit interconnect rod (9) just aligns with the top hole of the fuel control unit actuating lever (16). Then lengthen the control rod (9) by unscrewing one rod end bearing 1.5 turns. Install the fuel control unit control rod and lock jam nuts and safety.

e. Set the reverse dead band to approximately 5/16 of an inch. (Refer to Sketch B, Figure 8A-8.)

3B9

INTENTIONALLY LEFT BLANK

3238

1 START CONTROL CABLE
2 STARTING CONTROL UNIT
3 STARTING CONTROL ARM
4 FUEL CONTROL UNIT
5 ADJUSTMENT (IDLE SPEED SET) (TOOL P/N 51517)
6. F.C.U ARM SERRATED SPACER
7. F C U ARM
8. F.C.U ARM EXTENSION
9 F.C U INTERCONNECT ROD
10 CONTROL LEVER MOUNTING BRACKET
11 ADJUSTMENT, (DEAD BAN)
12 CAM FOLLOWER PIN
13 PIVOT PINS
14 PROPELLER CONTROL CAM
15 CLEVIS
16 FUEL CONTROL ACTUATING LEVER
17 POWER LEVER INPUT ARM
18 PROPELLER GOVERNOR AIR PRESSURE TUBE Py
19 PUSH PULL CONTROL, WIRE ROPE
20 CENTER FIRE SEAL MOUNT RING
21 LOW PITCH STOP ADJUSTER
22 PROPELLER GOVERNOR INTER-CONNECT ROD
23. PROPLLER SPEED SELECT LEVER, MAX STOP
24 CONTROL LEVER
25 PROPELLER GOVERNOR UNIT
26. JAM NUT
27 AIR BLEED LINK (RESET ARM)
28. MAXIMUM STOP
29 WIRE ROPE CLEVIS
30 PROPELLER REVERSING LEVER
31 BETA VALVE CLEVIS
32 CAP NUT
33 CARBON BLOCK
34 TOOL, (BETA RIGGING SHIM P/N 51516
35. VISE GRIP PLIERS
36 TOOL (TEMPLATE P/N 51518)
37 TOOL (LOCATED PIN P/N 51513)
38. GAS GENERATOR MAXIMUM STOP
39 SWITCH
40 CONTROL CABLE HOUSING
41 JAM NUTS
42 SEAL NUT
43 CONTROL SHAFT
44 BETA STOP
45 JAM NUT
45A. WASHER
46 WASHER BOLT
47 CONTROL PIVOT
48 ROD END
49 BOLT
50 OIL FILTER COVER
51 P3 AIR SUPPLY FILTER
52. JAM NUT

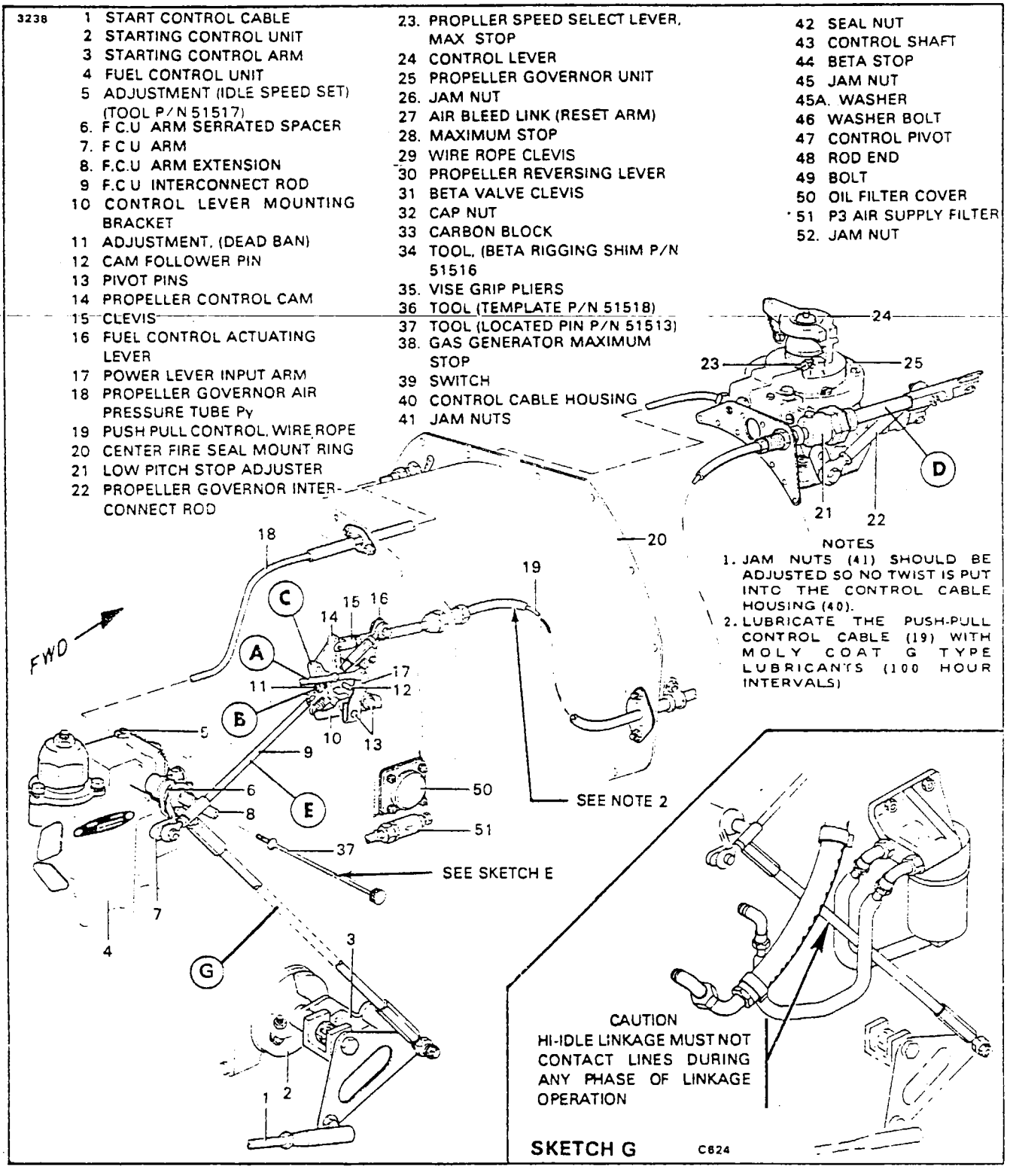

NOTES
1. JAM NUTS (41) SHOULD BE ADJUSTED SO NO TWIST IS PUT INTO THE CONTROL CABLE HOUSING (40).
2. LUBRICATE THE PUSH-PULL CONTROL CABLE (19) WITH MOLY COAT G TYPE LUBRICANTS (100 HOUR INTERVALS)

Figure 8A-8. Engine Controls

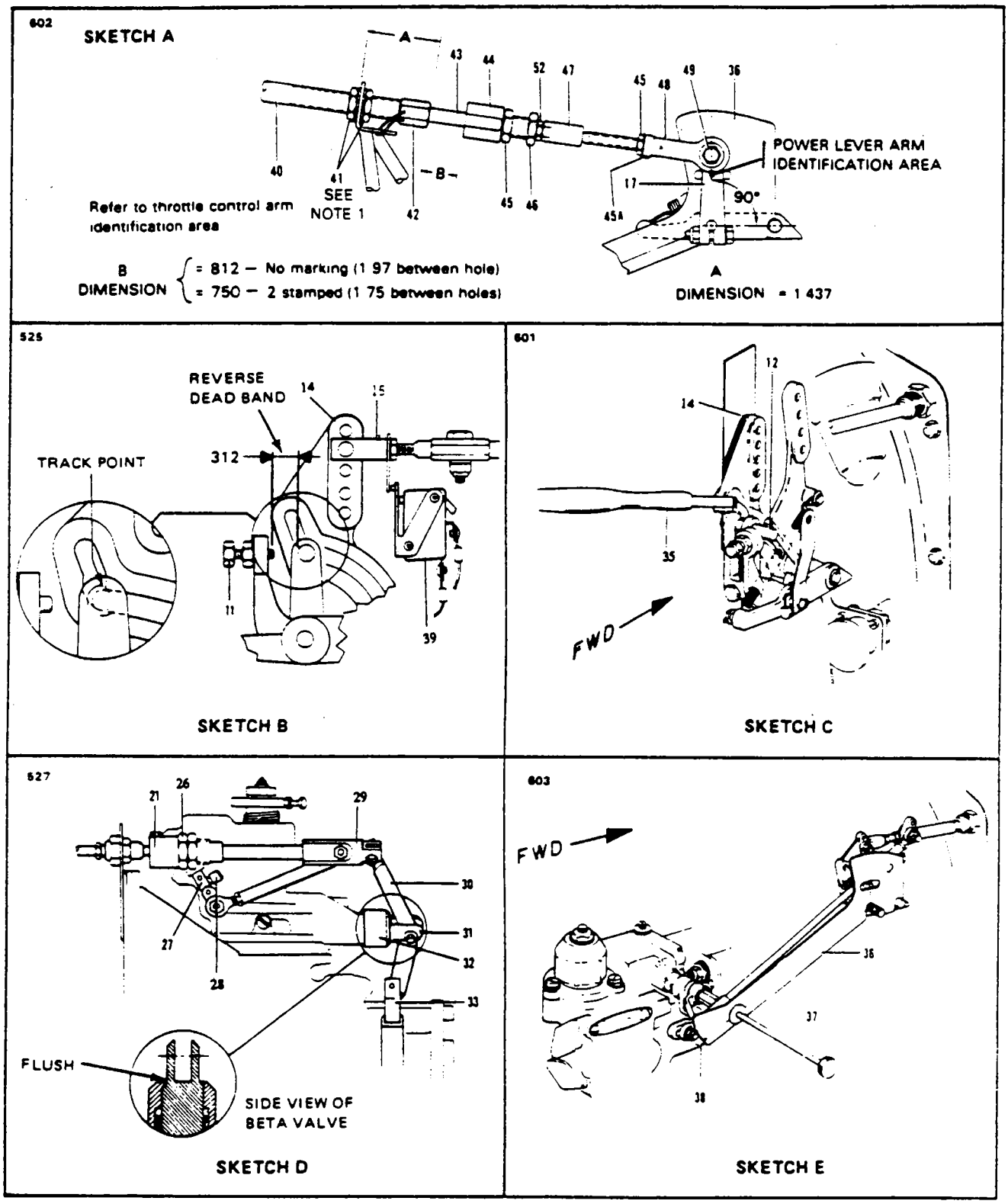

Figure 8A-8. Engine Controls (cont.)

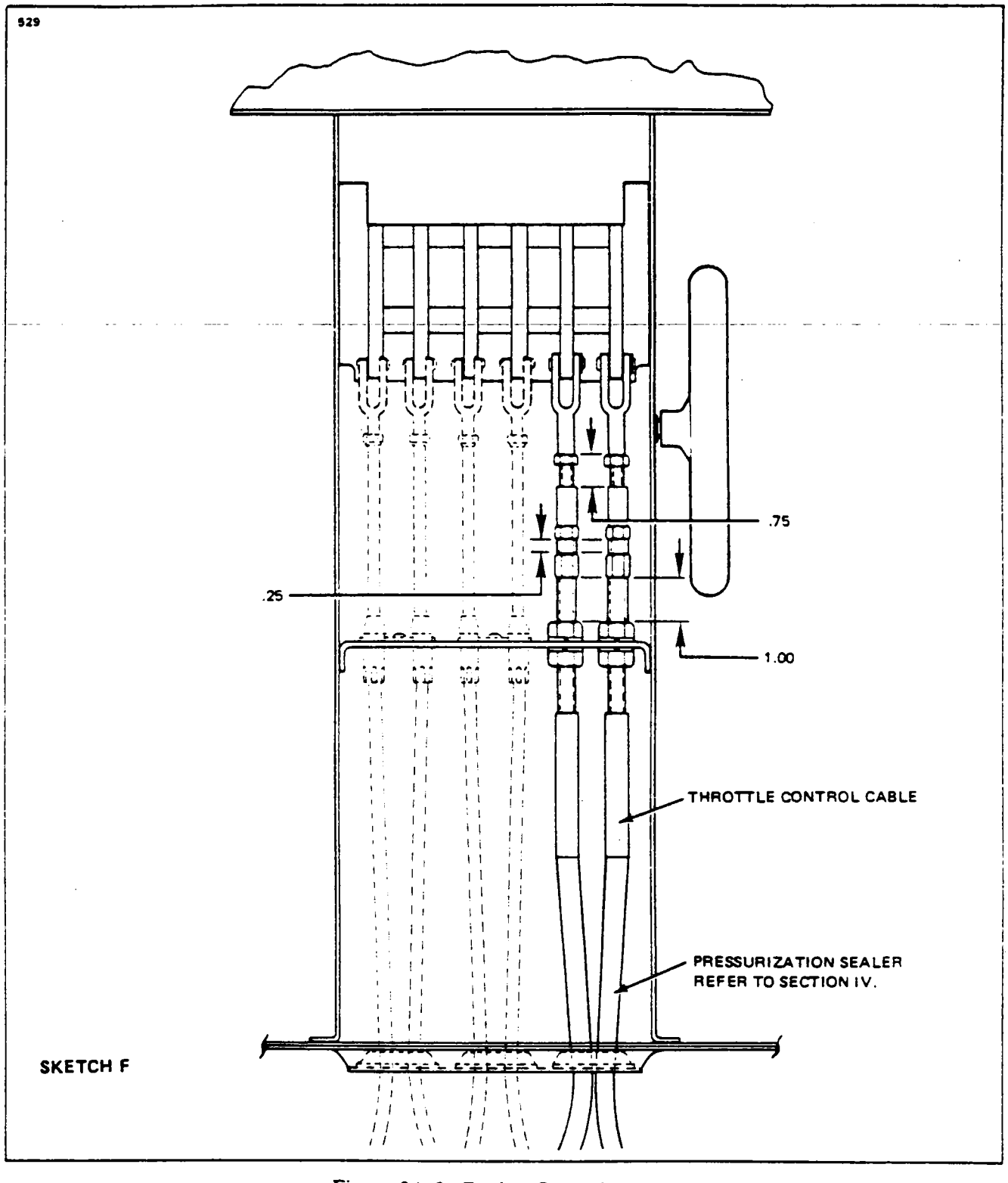

Figure 8A-8. Engine Controls (cont.)

8A-46. RIGGING THROTTLE CONTROL CABLE TO THE POWER LEVER ARM. (Refer to Figure 8A-8.)

a. Remove control cable attaching bolt (49) from the power lever arm (17).

b. Lock cam lever at track point with tool (P/N 51516). (Refer to Paragraph 8A-44, (cam box) rigging.)

c. Install beta rigging template (P/N 51518) and locator pin (P/N 51513).

NOTE

Power lever arm must be 90 degrees from pivot pins.

d. With the power control lever in the cockpit at idle position, adjust power cable rod end (48) to a slip fit to the power control arm attaching bolt (49).

e. Adjust the reverse beta stop (44) to the proper length.

NOTE

Leave the control cable disconnected to prevent someone pulling the power lever into reverse and moving the track point.

8A-47. BETA VALVE RIGGING PROCEDURE.

a. Check the feedback ring for run out and carbon block clearance. (Refer to Figure 8A-9.)

b. Install the dial indicator to measure run out on the forward inside surface of the feedback ring.

NOTE

When installing a new brush block remove an equal amount of material from both sides of the block to obtain proper clearance.

c. Disconnect the propeller governor interconnect rod at the governor arm.

d. While holding the reverse arm forward the piston should be just flush with the beta valve cap nut. If adjustment has to be made, cut the safety wire on the low pitch stop adjuster and jam nut. Loosen the jam nut and while holding the barrel nut, turn the barrel in or out to adjust the piston flush with the cap nut. Remember to keep checking flush fit while holding forward pressure on linkage. After adjusting the beta valve tighten and safety the barrel and jam nut.

8A-48. LOW PITCH STOP SWITCH ADJUSTMENT. (Refer to Figure 8A-9.) The low pitch stop switch is mounted on the engine reduction gear case and is actuated by the movement of the feedback ring and propeller reversing lever. Adjust the switch as follows:

a. Ascertain that the switch (7) is adjusted to obtain .032 of an inch space between the actuator arm and switch body when the plunger (5) is fully depressed.

b Should the switch (7) require adjustment to obtain the .032 dimension, loosen the switch mounting screws slightly and make the adjustment with the adjusting bolt (13); then secure the switch mounting screws.

c. Install the feedback ring puller (P/N 51519). Use a 5/8 standard socket against the propeller hub.

d. Adjust the plunger (5) and jam nut (6) to have the low pitch stop switch (7) click closed upon reaching 1/4 inch forward movement of the feedback ring (10).

e. Recheck this setting and make any final adjustments. Lock the jam nut on the plunger and torque 20-25 inch-pounds. Remove the puller after making this setting. Ascertain that the plunger (5) moves smoothly in the bracket (11).

f. Remove the feedback ring puller (P/N 51519).

8A-49. RIGGING OF PROPELLER GOVERNOR INTERCONNECTING ROD TO PROPELLER PUSH-PULL CABLE (Refer to Figure 8A-8.)

NOTE

Before rigging the interconnecting rod, make certain the Beta valve is properly rigged.

a. With the interconnect rod (22) removed from the propeller governor air bleed link arm (27), loosen the rod end lock nuts. Hold the governor link arm forward against the low pitch adjuster stop (28) and adjust the interconnect rod to a slip fit over the attaching bolt.

b. Pre-load the interconnecting rod by shortening the over all length of the rod by turning each rod end fitting one-half turn. Tighten lock nut to 32-36 inch-pounds and safety wire.

c. Secure the rod end with the attaching hardware and torque bolt and nut to 25-35 inch-pounds and safety.

8A-50. RIGGING THE PUSH-PULL CABLE TO CAM BOX. (Refer to Figure 8A-8.)

NOTE

Cam box must be held at track point.

a. While holding forward pressure on the reversing linkage, attach the clevis (15) at the end of the reversing push-pull cable to the second hole on the reversing cam lever.

b. Install clevis pin to a slip-fit and secure pin.

8A-51. PROPELLER REVERSE SWITCH ADJUSTMENT. (Refer to Figure 8A-8.) The propeller reverse switch (39) is mounted on the rear propeller reverse linkage and is actuated by movement of the propeller control cam (14) in the reverse direction. Adjust the switch as follows:

a. Be certain that all mechanical linkage is properly adjusted.

b Loosen the attachment screws and rotate the switch counterclockwise until a click can be heard.

c. Move the switch a slight amount more approximately 0.031 of an inch and tighten attachment screws.

d. Check that by depressing the switch pickup trigger, NO click is heard.

8A-53. THROTTLE CONTROL CABLE HANDLING AND STORAGE (POWER LEVER). The throttle control cables require special handling, storage and installation to prevent irreversible damage to the cables. The cables utilize close spaced ball bearings above and below a ribbon core of stainless steel. The following handling and storage procedures should be observed:

a. Uncoiling of the cable should be done as shown in Figure 8A-7.

b. After the cable has been uncoiled the ribbon should be straightened. This assures that the control is not twisted prior to installation.

c. Pliers or similar devices should not be used to grip any surface of the control.

d. Use the wrench flats on the end fittings and the terminal ends to prevent twisting when torquing nuts or attaching hardware.

e. The bend radii shall be seven inches minimum.

f. The plane of bend can be changed by allowing the control to coil easily into the new plane

g The control cable assemblies should never be lubricated.

h. Do not twist, crimp, dent, apply side pressure, or stand on the control assembly. It is a precision ball bearing device and improper handling will seriously affect its operation.

8A-54. THROTTLE CONTROL CABLE REMOVAL AND INSTALLATION (POWER LEVER).

a. Observe handling precautions noted in Paragraph 8A-53.

b. Remove access cover aft of the nose gear doors, inboard wing leading edge fairing, nacelle access covers aft of engine firewall, upper engine cowling and pedestal access covers.

c. Before disconnecting cable obtain measurements of existing installation using the following procedure. (Refer to Figure 8A-8.)

1 Set throttle to idle and lock cam box similar to method for setting track point, do not disturb engine rigging.

2. Using calipers measure the distance between seal nut (42) and beta stop (44).

3. Back seal nut (42) off and measure distance to end of threads.

4. Count the number of control pivot threads (47) engaged in rod end (48)

d. Cable to be replaced should be removed. Note routing and attachment points for installation of new cable.

e. Starting at the access hole aft of nose gear doors work the control cable through the fuselage into the wing leading edge and up to the nacelle attachment point. The control should be routed without any restraint at either end or any undo forcing, during installation.

f. Ascertain that cable has been routed properly. Clamps should not be overtightened; cables should be free to move through the clamps.

g. Check for smooth operation of control before connecting to attachment points

h. Connect control cables to pedestal throttle lever per Figure 8A-8, Sketch F

i. Install control cables to power lever arm as shown in Figure 8A-8, Sketch A. Use measurements obtained in Step c, above.

j Reseal throttle cable at floor line, refer to Section IV.

k. Run the airplane and make the following check per instruction given in this section

1 Forward gas generator (Ng) pickup dead band.

2. Power lever alignment check

3 Reverse maximum power setting.

4. Check that maximum (Ng) speed adjustment contacts part power trim stop

l. If engine rigging is disturbed it will be necessary to perform pre-run rigging and adjustments of power control and continue through final adjustments.

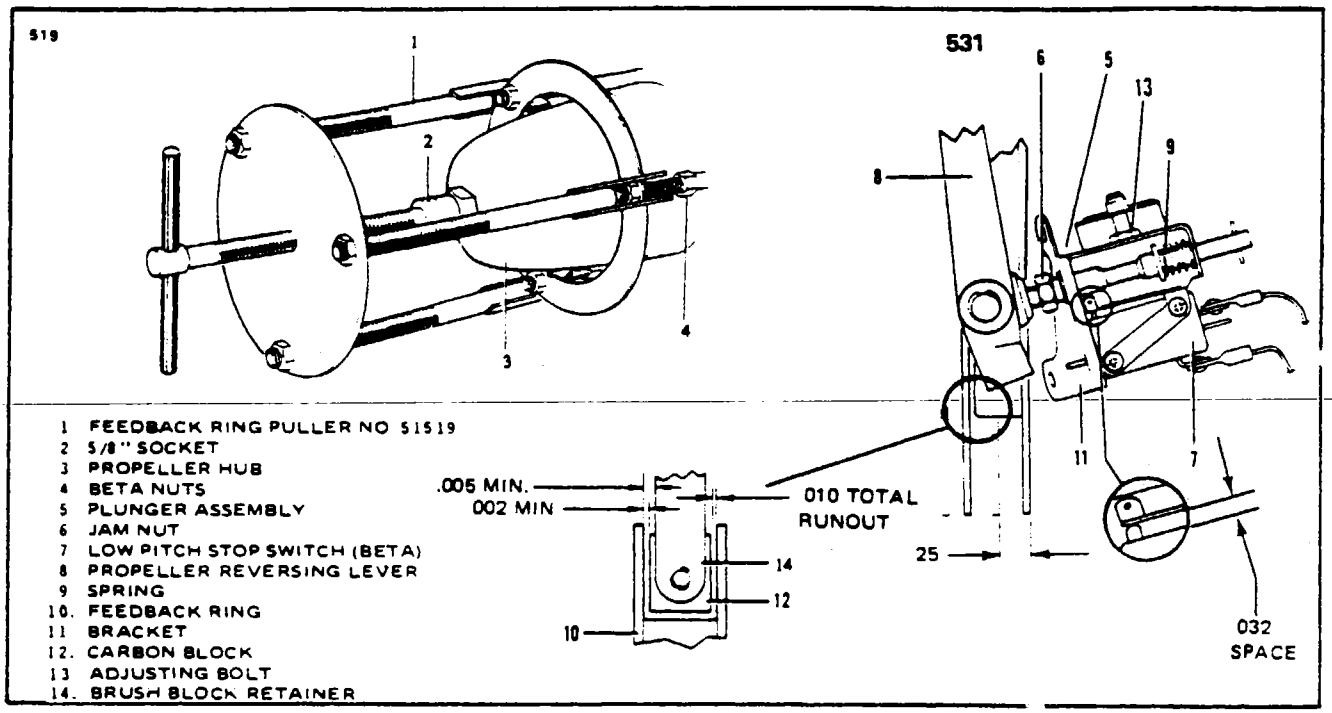

Figure 8A-9. Low Pitch Stop Switch Adjustment

8A-55 PRE-RUN RIGGING AND ADJUSTMENT OF POWER CONTROL (AIRFRAME TO ENGINE INTERCONNECT). (Refer to Figure 8A-8.)

a. Rig and adjust all engine controls as per Paragraph 8A-37 through 8A-52 of this section.

b. Before the engine is started and running adjustments are attempted, engine instrumentation should be calibrated. This includes the torquemeter, the ITT gauge, the propeller, and gas generator tachometer gauges, and the fuel flow gauges. This instrumentation should be checked for accuracy as all running adjustments are made by matching of engine instrument reading.

8A-56 ENGINE DEPRESERVATION. After completion of a new engine installation and before the first engine start, the following procedure should be followed to clear the engine.

a. Fill the engine oil tank with the recommended oil. (Refer to the latest revision of Pratt and Whitney Aircraft of Canada Ltd. Service Bulletin No. 1001.)

NOTE

When filling the oil tank, it is recommended that the oil be strained before entering the engine to eliminate the possibility of foreign material in the engine.

b. Motor the engine to circulate the oil.

c. Recheck the oil level and refill as necessary. Normal oil level is one U.S. quart below the maximum level mark.

d. Disconnect number one and two fuel manifolds at base of nozzle ring. Attach a short piece of hose to permit fuel to drain into a container.

e. Set start control to run; ignition switch OFF; fuel pump on and fuel shutoff valve on. Insure ignition micro switch on condition lever opens before fuel flow indication.

CAUTION

Do not exceed starter time limits (30 seconds ON, 1 minute OFF, 30 seconds ON, 1 minute OFF, 30 seconds ON, 30 minutes OFF).

f. Motor engine until clean fuel is draining from number one manifold.

NOTE

Check for proper operation of oil pressure, fuel flow, fuel pressure, and Ng percent indicator moves in the proper direction during initial motoring run.

g. Remove hose from number one manifold and plug line with a suitable plug.
h. Repeat Step f for number two fuel manifold.
i. Remove plugs and reconnect manifolds and safety.

8A-57. ENGINE MOTORING RUN. An engine motoring run is used to clear the engine of trapped fuel or vapors after an unsatisfactory start and to check for fuel system leaks after component replacement.

a. Set the power control lever at IDLE.
b. Set the starting control lever at CUTOFF.
c. Master switch ON (to supply electrical power to starter).
d. Fuel shutoff valve ON.
e. Fuel boost pump switch ON (to provide lubrication for engine driven fuel pumping elements)
f. Leave ignition switch OFF.
g. Operate the starter for 10 seconds.

CAUTION

Do not exceed starter time limits (30 seconds ON, 1 minute OFF, 30 seconds ON, 1 minute OFF, 30 seconds ON, 30 minutes OFF).

h. Release engine starter switch.
i. Fuel boost pump switch OFF, after Ng has stopped.
j. Master switch OFF.

8A-58. ENGINE GROUND CHECK AND SAFETY PRECAUTIONS

a. Prior to ground testing the engines, the following safety precautions should be adhered to:
   1. Position the airplane into the wind.
   2. Set the parking brake and chock the wheels.

NOTE

The importance of placing chocks in front of the wheels cannot be overstressed. It is possible for the airplane to move with just the brakes applied when the power being applied exceeds 600 foot-pounds of torque.

3. Be certain a fire extinguisher is readily available.
4. Be certain the area around the airplane is free of loose objects.
5. Check that the engine intakes and exhausts are free from foreign objects.
6. Ascertain that the danger areas around the airplane are clear of personnel.

b. Ascertain the engine indicating systems are properly calibrated. (Refer to Paragraph 8A-94.)

c. Install the lower cowl if not previously installed; remove the upper cowl if installed, and install the ground testing cowl P/N 51520 which is available through the Piper Service Department.

NOTE

Before attempting to start the engine, personnel should be checked out by a qualified pilot or other responsible person on the engine starting and shutdown procedures, and any other system functions which may be required to properly and safely operate the power plants. The use of the Pilot's Operating Manual for this information is required.

d. Start the engine and idle three to five minutes. Cycle the propeller while running. Check the inter-turbine temperature and torque gauges for proper operation.

e. Shutdown the engine and check the oil level. Refill if necessary to proper level (1 quart below the full mark).

f. Restart the engine.

g. Check the secondary low pitch stop operation as follows:

1. Move the power levers toward reverse until the low pitch "Beta" lights come on.
2. Push down and hold the lock pitch test switches while continuing to move the power levers toward reverse. The prop should not go into reverse, and the lights should blink.
3. Continue to move the power levers toward reverse until mechanical resistance is felt.

CAUTION

Do not force the power levers to full reverse, this could cause damage to the linkage.

4. When mechanical resistance is felt in the power levers, release the secondary low pitch switch. The props should go toward reverse (increase in prop RPM).

h. Check the overspeed governor (HTG) as explained in Paragraph 8A-31

8A-59. ENGINE IDLE AND POWER ADJUSTMENTS. (Refer to Figure 8A-8 and 8A-10.) Engine adjustments must be performed after installation of an engine; however, each adjustment can be performed independently if a specific component or adjustment is to be checked. An example of an adjustment check sheet is provided to record data obtained during the adjustment procedure. (Refer to Chart 8A-1.) Before attempting any power adjustments, check to be certain the engine controls are properly rigged.

NOTE

Engine instrumentation must be correctly calibrated before attempting any adjustments.

NOTE

When performing power adjustments, the engines are to be run with no load applied. Disconnect and cap the air bleed tube at the rear fire seal, generators off, etc. Power checks must be carried out under low wind conditions with the aircraft facing into the wind

CAUTION

Shutdown the engine if at any time inter-turbine temperature (T5) rises abnormally.

a. FORWARD GAS GENERATOR (Ng) PICKUP DEAD BAND. The forward pickup dead band is the amount of travel the power lever linkage moves before the gas generator speed starts to increase. The forward pickup must be matched on each power lever to provide matched power output from the engines. Adjust the forward dead band on the fuel control unit interconnect rod. (Refer to Figure 8A-8.) Shortening the rod will decrease the amount of dead band.

b. 1700 RPM TORQUE SETTING. The 1700 rpm torque setting is adjusted using the low pitch stop adjuster on the engine. (Refer to Figure 8A-8, Sketch D.) Adjust the 1700 rpm torque using the following procedure:

NOTE

It is not necessary to cap the bleed airline when checking the 1700 rpm torque setting.

1. Accurately record the stabilized outside air temperature in degrees Centigrade, and set the altimeter window to 29.92 and record the pressure altitude.
2. Start the engine and allow the instruments to stabilize.
3. With the propeller lever full forward, advance the power lever until 1700 rpm propeller speed is obtained.
4. Record the engine torque indicated on the torquemeter.
5. Shutdown the engine.
6. Refer to Chart 8A-6 and read the desired engine torque for the prevailing ambient conditions.
7. Insure that the Beta valve slot is flush with the Beta valve capnut; minor torque changes can be made by adjusting the low pitch stop adjuster as follows: (Refer to Figure 8A-10.)
   (a) Holding track point position on the cam control lever, insert tool P/N 51516 behind the cam onto the pin and hold the cam and tool in position with a small pair of vise grip pliers. Install vise grip pliers tight enough to hold the control cam from moving, but not tight enough to damage the cam. (Refer to Figure 8A-8, Sketch C.)
   (b) Temporarily secure the reset arm to one of the governor screws; then disconnect the propeller governor interconnect rod from the air bleed link (reset arm).
   (c) Loosen the jam nut on the low pitch stop adjuster.
   (d) Holding the adjuster slowly turn the barrel in or out to obtain the desired torque setting.

CAUTION

Turning the barrel out will increase torque and turning the barrel in will decrease the torque.

DO NOT turn the barrel more than two turns. (1/2 turn equals approximately 50 foot-pounds of torque.)

(e) Tighten the jam nut on the adjuster, remove any securing device used to hold the reset arm and reconnect the interconnect rod.

NOTE

It may be necessary to readjust the interconnect rod. (Refer to Paragraph 8A-49.)

(f) To insure that no movement was transferred through the wire rope to the cambox, check the clevis pin fit with the cam at track point. The clevis pin must be a slip fit

NOTE

The torque meter reading should be within 40 foot-pounds of the value obtained from chart. Right and left engines should be 20 foot-pounds of each other.

(g) Ascertain that all holding devices are removed and that all areas are properly safety wired.

THIS SPACE INTENTIONALLY LEFT BLANK

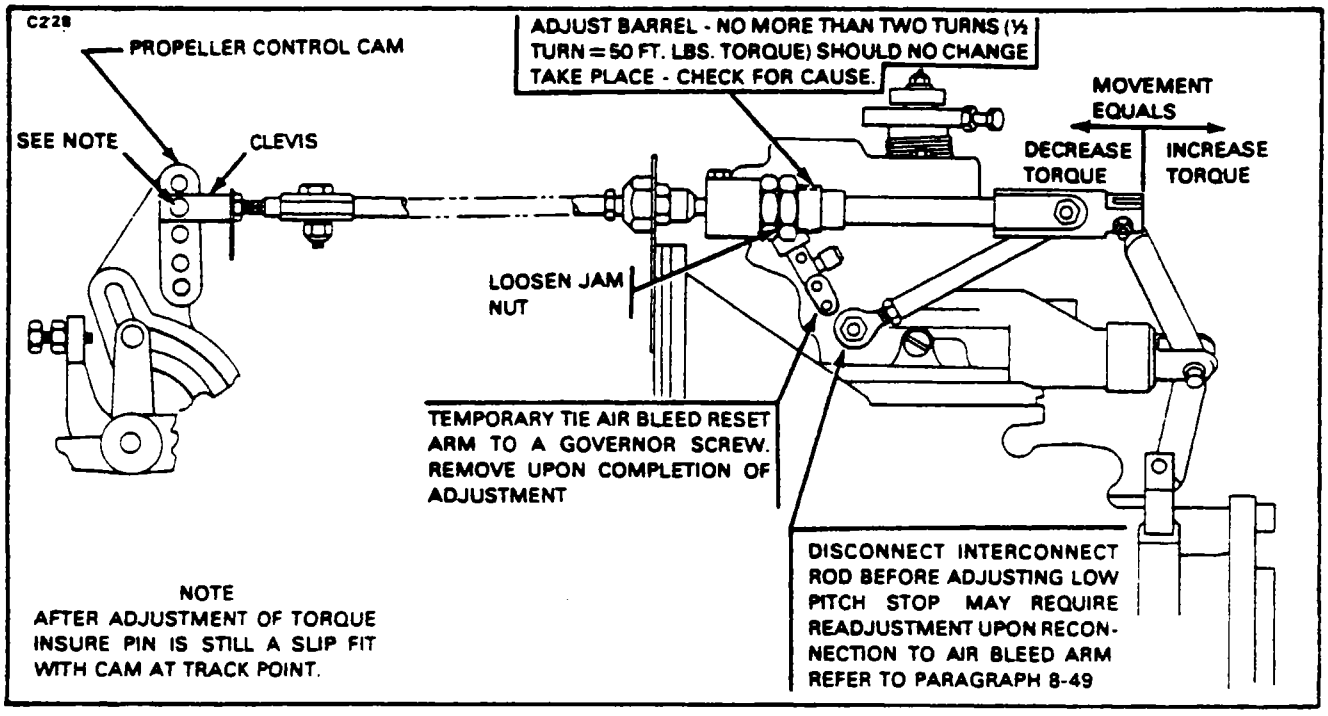

Figure 8A-10. Minor Torque Adjustment

c. IDLE SPEED ADJUSTMENTS. The engine idle speed is controlled by two separate adjustments. minimum governing speed and minimum fuel flow. The minimum governing speed adjustment controls engine idle at pressure altitudes from sea level to approximately 3500 feet at which the fuel flow required to achieve 52% gas generator (Ng) idle is greater than the minimum fuel flow setting. At higher altitudes the minimum fuel flow setting will govern the Ng idle speed

CAUTION

The minimum fuel flow setting is NOT FIELD adjustable.

NOTE

Do not attempt idle speed checks at pressure altitudes greater than 3500 feet.

Adjust idle speed as follows:

1. Check to insure that the power lever linkage is adjusted per Paragraph 8A-55
2. Start the engine and let the oil temperature stabilize.
3. Set the propeller control lever to feather position.

4. If Ng is less than 52%, proceed as follows:
   (a) Adjust minimum governing speed adjuster with tool (P/N 51517)(refer to Figures 2-16 and 8A-11, Sketch B) to obtain 52% Ng minimum. Turn adjuster clockwise to increase speed, or counterclockwise to decrease speed.

CAUTION

The minimum governing speed adjustment is extremely sensitive; turn the screw in small increments; 1/16 of a turn equals approximately 1% change in Ng speed.

d. POWER LEVER ALIGNMENT CHECK.

CAUTION

The wheels should be checked and the parking brakes set when applying power in excess of 600 foot-pounds, as the aircraft could move.

1. Advance the power levers to 400, 600, 800 and 1,000 foot-pounds of torque and note the dimensions which the power levers are out of alignment.
2. Adjustment is made by repositioning the fuel control arm (refer to Figure 8A-8, item 7) clockwise to advance a power lever or counterclockwise to retard a power lever. This adjustment may also require the readjustment of the fuel control unit interconnect rod (refer to Figure 8A-8). Refer to Paragraph 8A-44, Step "f" for adjustment of arm and Step "g" for adjustment of the interconnect rod.
3. Repeat Steps 1 and 2 as required to insure power lever alignment.

NOTE

If alignment of the power levers cannot be maintained throughout their complete travel, it is recommended that a new power lever arm (17) be used.

4. After the power levers are aligned, recheck the gas generator pickup and adjust with interconnect arm (9).
5. With engines shut down, move power levers full forward and insure gas generator stop is contacted. Power levers should remain aligned at this position. If gas generator stop cannot be contacted on one of the engines, the above adjustments must be made to the opposite power lever.

e. REVERSE GAS GENERATOR (Ng) PICKUP DEAD BAND. The reverse gas generator pickup dead band is the amount of travel the power lever arm moves before the cam follower pin contacts the fuel control unit reversing lever; at this point the gas generator speed starts to increase. Adjust the pickup dead band to approximately .31 of an inch Gas generator pickup should occur when propeller rpm speed has dropped 150 rpm. These settings may require additional adjustment to insure gas generator speed on both engines picks up simultaneously in reverse.

f. REVERSE MAXIMUM POWER SETTING. The reverse maximum power setting is limited to 200 shp (shaft horsepower) to achieve the correct reverse power setting, proceed as follows:

1. Start the engine and allow the instruments to stabilize.

CAUTION

Do not select reverse power with the engine static; as damage will be done to the linkage.

2. Move the power levers into the reverse position and record the torque (Q) and propeller speed (Np).
3. Move the power levers to the idle position.
4. To determine the reverse horsepower, use the following equation: Q x Np x 0.00019. This equation will give the reverse power for the prevailing ambient conditions.
5. If necessary, adjust the reverse stop on the power linkage. (Refer to Figure 8A-8, Sketch A.) An increase in gap is equal to an increase in engine power. One flat on the reverse power stop equals a 25 foot-pound increase in torque. For nominal setting, refer to Figure 8A-8, Sketch A dimension B
6. Secure the jam nut on the reverse stop after the adjustment is complete.

g. MAXIMUM PROPELLER SPEED. The maximum propeller speed is 1900 rpm. Adjust the maximum propeller speed as follows:

1. Start the engine and allow the instruments to stabilize
2. With the propeller lever full forward, advance the power lever to obtain 1900 propeller rpm
3. If necessary, adjust the maximum propeller speed adjustment to obtain the desired 1900 rpm.

h. MAXIMUM GAS GENERATOR (Ng) SPEED. Refer to the Part Power Trim Check Procedures, Paragraph 8A-61

i. PROP REVERSING ALIGNMENT CHECK.

1. With the engines running, slowly move the power levers toward reverse and note that the propellers move into Beta together (RPM increase).
2. Matching is determined by carefully rechecking and adjusting the Beta valve. (Refer to Paragraph 8A-55)

533

SKETCH A

1 GOVERNOR MAX SPEED ADJUSTMENT
2 PNEUMATIC MAX STOP (NOT FOR FIELD ADJUSTMENT)
3 PNEUMATIC MIN ECCENTRIC ADJUSTMENT
4 AIR BLEED LINK (RESET ARM)
5 FEATHERING ADJUSTER

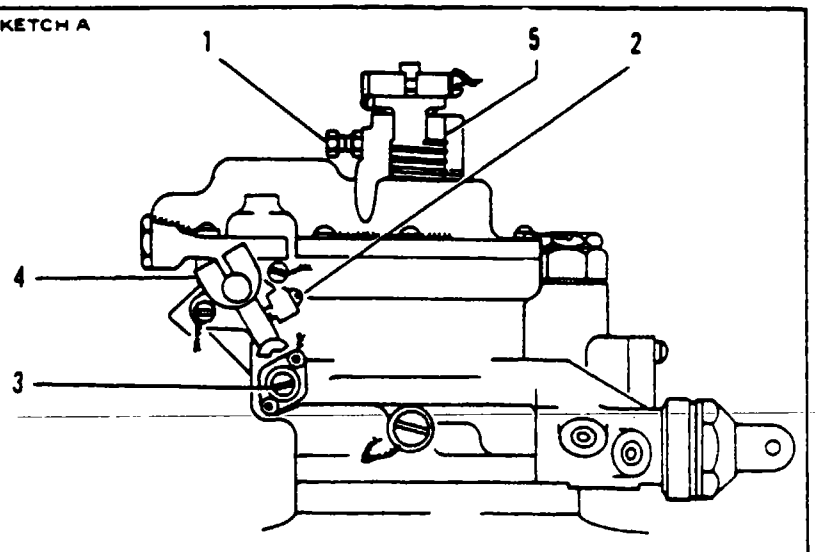

PROPELLER GOVERNOR

1 IDLE SPEED SET (MIN Ng GOVERNING SPEED) (TOOL P/N 51517)
2 ACCELERATION ADJUSTMENT
3 MIN FLOW ADJUSTMENT (NOT FIELD ADJUSTABLE)
4 PART POWER TRIM STOP
5 MAX Ng SPEED ADJUSTMENT
6 METERING SLEEVE

SKETCH B

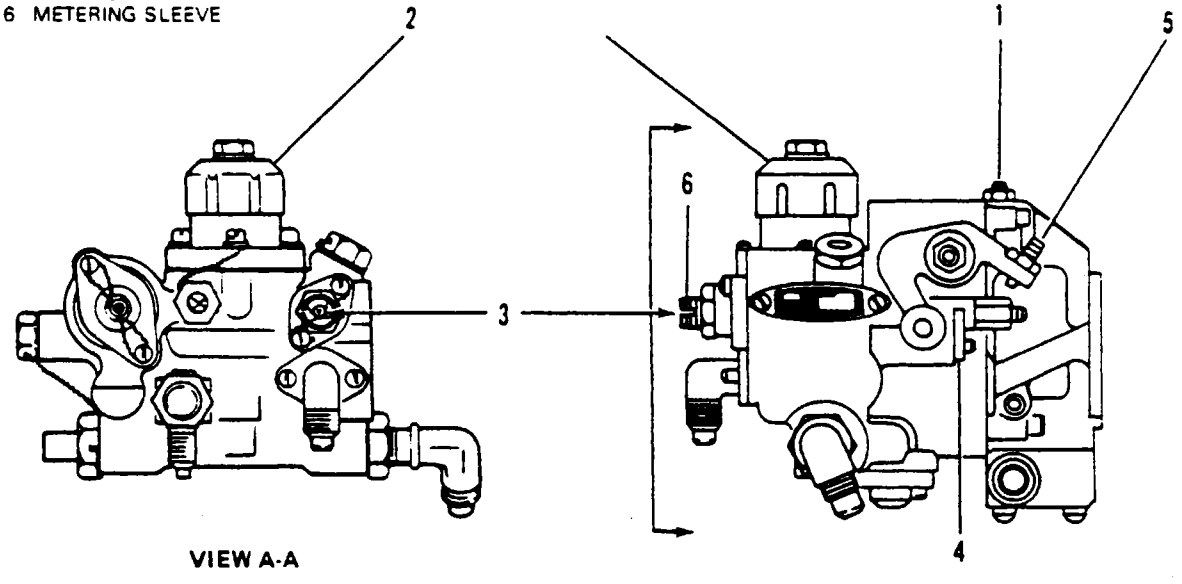

VIEW A-A

FUEL CONTROL UNIT

Figure 8A-11. Running Adjustment Settings

8A-60. ENGINE GROUND TESTING. Ground testing procedures must be carried out periodically to determine any changes in engine performance and detect any mechanical deterioration of the engine. All forms of engine deterioration are accompanied by an increase in inter-turbine temperature and fuel flow at a given power. Compressor deterioration is usually due to dirt deposits and causes an increase in gas generator speed at a given power setting This form of deterioration can be remedied by a compressor wash. Refer to Table VIIIA-II for appropriate Pratt and Whitney Engine Maintenance Manual. Hot section deterioration will cause a decrease in gas generator speed at a given power setting.

NOTE

Engine ground testing must be performed with no load applied (bleed air capped off, generators off, etc.) and under low wind conditions with the aircraft facing into the wind.

NOTE

Engine instrumentation must be correctly calibrated before attempting any power checks.

8A-61. PART POWER TRIM CHECK. (Refer to Figure 8A-11.) Fuel control units are calibrated to insure maximum power. The part power trim stop must be adjusted to insure maximum power on a 21° C (71° F) day If engine inlet temperature is other than this, it will not be possible to set the maximum Ng speed stop without first reaching either an inter-turbine temperature or a torque limit. To overcome this, the part power trim stop is provided. The stop is a movable spacer placed between gas generator maximum speed (Ng) stop and power lever anvil and represents a 1700 rpm (Ng) speed decrease. The part power trim stop is permanently attached to the fuel control unit and is used only for engine trimming. Adjust the maximum Ng speed as follows:

a. Loosen the screw securing the part power trim stop and rotate the stop into position so as to limit the power control lever travel.

b. Disconnect and cap the air bleed tube at the rear fire seal. Do not allow any leakage.

c. Start the engine and allow it to stabilize with no load applied to the engine (generators off, bleed airline capped off, etc.)

d. Advance the power lever until the part power trim stop is contacted and allow the engine to stabilize at this setting with the propeller control forward.

CAUTION

If ambient temperatures are excessively high, it will be impossible to perform this adjustment without reaching a temperature limit. Do not exceed the maximum inter-turbine temperature limit (805° C) and torque limit (1714 foot-pounds at 1900 RPM).

e. Check the gas generator (Ng) speed and, if required, adjust the gas generator maximum speed adjustment to obtain 97 1% gas generator speed. 1 2 turn = approximately 1% change.

CAUTION

GAS GENERATOR SPEED MUST NOT EXCEED 97.1% DURING CHECK AND ADJUSTMENT AND INTER-TURBINE TEMPERATURE MUST NOT EXCEED THE MAXIMUM LIMIT (805° C).

f. Shutdown the engine.

g. Stow and lockwire the part power trim stop and lockwire the gas generator maximum speed adjustment.

h. Conduct a flight to an altitude of 15,000 feet. At some point, obtain a full throttle setting without exceeding torque or temperature limits. Observe that the maximum Ng speed never exceeds 101%, but does reach a minimum of 100%. If the Ng does not reach 100%; then readjust set screw on the ground but DO NOT run up engine on ground. Re-fly the aircraft to obtain a minimum of 100% Ng.

i. If flight test shows Ng above 101%, then readjust set screw on ground to a lower setting and re-fly aircraft as stated in Step h.

CAUTION

Never exceed 101.5%.

8A-62. ENGINE OVERTEMPERATURE AND OVERTORQUE LIMITS. For overtemperature or overtorque limits and the necessary inspection procedures and corrective action, refer to Table VIIIA-II for appropriate Pratt and Whitney Engine Maintenance Manual.

8A-62a. ENGINE GROUND PERFORMANCE CHECK. Engine performance checking curves enables engine performance to be checked, on the ground, over a wide range of ambient temperatures without overtorquing or overtemperaturing the engine. Charts 8A-2 thru 8A-5 are used to determine the desired engine performance parameters. Determine the engine performance as follows:

NOTE

Engine instruments should be recently calibrated.

a. Obtain and record the ambient air temperature. Set the altimeter window to 29.92 and record the pressure altitude.

b. Refer to Charts 8A-2 thru 8A-5, and from the appropriate graph read and record fuel flow, gas generator speed torque and inter-turbine temperature for the prevailing ambient conditions.

c. With these values established, proceed with engine performance check.

NOTE

This check must be carried out with generators off, but do not disconnect bleed air.

d. Start the engine and run at idle rpm for 5 minutes to allow temperatures to stabilize.

e. Set propeller control lever to give 1900 rpm with power lever set to give torque setting previously determined from the engine performance curve. Allow the instruments to stabilize at this setting.

f. Record and compare observed fuel flow, gas generator speed, and inter-turbine temperature with values previously recorded. The values observed must be within the following limits:

1. Fuel flow - do not exceed.
2. Gas generator speed - do not exceed.
3. Maximum inter-turbine temperature not exceeded.

If temperature is more than 75°C below target temperature, check instrumentation.

NOTE

It is normal for the fuel flow, ITT and Ng to be below the chart value, but should not exceed it.

g. If engine performance deviates from the preceding limits, refer to Table VIII-II for appropriate Pratt and Whitney Engine Maintenance Manual.

NOTE

The importance of monitoring the performance of an engine throughout its history cannot be overemphasized. The Aircraft Gas Turbine Operation Information Letter #15 has been devised by Pratt and Whitney Aircraft of Canada Ltd., and should be consulted to aid in monitoring the engine performance trend. (Refer to the latest revision.)

THIS SPACE INTENTIONALLY LEFT BLANK

GROUND ADJUSTMENT CHECK SHEET
PIPER CHEYENNE

NOMINAL SETTINGS	AIRCRAFT NUMBER
IDLE (Ng) - 52% MIN. IDLE ITT - 685°C MAX OIL PRESSURE - 40 PSI MIN. (IDLE) 85 TO 105 PSI TAKEOFF OIL TEMP - 0°C to 99°C FUEL PRESSURE - 15 to 27 PSI MAX PROPELLER SPEED - 1900 RPM REVERSE MAX POWER - 200 HP MAX. GAS GENERATOR SPEED - 97 1% (PART POWER TRIM STOP CONTACTED.)	ENGINE NUMBERS L. R MECHANIC DATE AMBIENT CONDITIONS PRESSURE ALTITUDE _____ FT OUTSIDE AIR TEMP _____ °C

ADJUSTMENT SETTINGS	LEFT ENGINE	RIGHT ENGINE
FORWARD DEAD BAND	_____ IN.	_____ IN
1900 RPM TORQUE SETTING	_____ FT-LB	_____ FT-LB
ITT	_____ °C	_____ °C
IDLE SPEED (Ng)	_____ %	_____ %
REVERSE DEAD BAND	_____ IN	_____ IN
REVERSE MAXIMUM POWER	_____ RPM _____ % _____ FT-LB	_____ RPM _____ % _____ FT-LB
MAXIMUM PROPELLER SPEED	_____ RPM	_____ RPM

PART POWER TRIM CHECK	LEFT (1) ENGINE	RIGHT (1) ENGINE
TORQUE Ng ITT	_____ FT-LB _____ % _____ °C	_____ FT-LB _____ % _____ °C
DATA PLATE SPEED CHECK		
TORQUE _____ FT-LB (2)	_____ FT-LB	_____ FT-LB
FUEL FLOW ____ LBS/HR (2)	_____ LBS/HR	_____ LBS/HR
Ng/DPS _____ (2)	_____	_____
ITT _____ °C (2)	_____ °C	_____ °C

NOTES
1 INDICATED INSTRUMENT READINGS
2. APPLICABLE CURVE READINGS

REMARKS

Chart 8A-1. Ground Adjustment Check Sheet

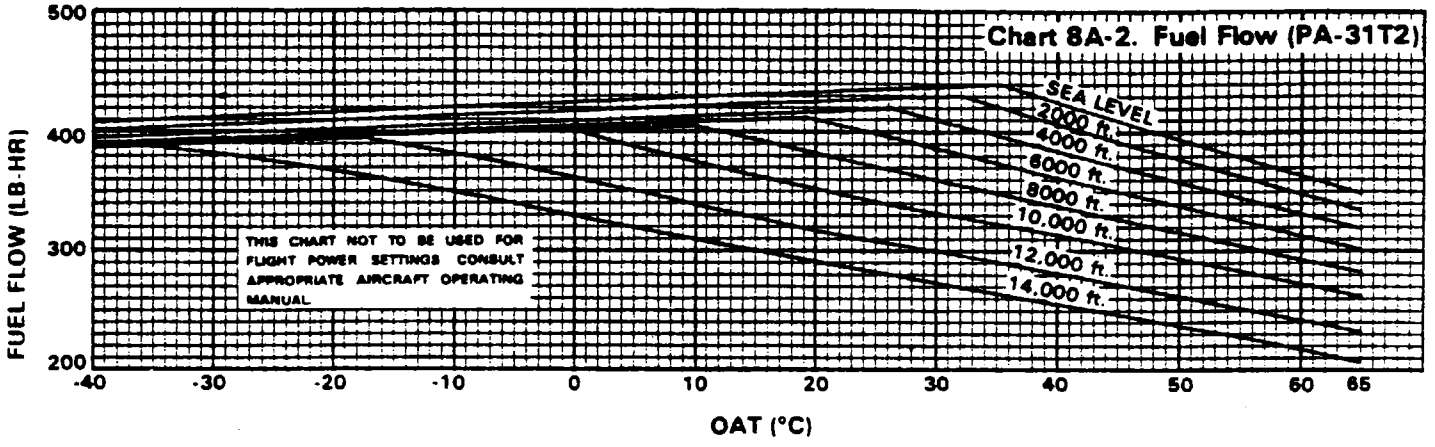
Chart 8A-2. Fuel Flow (PA-31T2)
FUEL FLOW (LB-HR)
500
400
300
200
-40
-30
-20
-10
0
10
20
30
40
50
60
65
OAT (°C)
SEA LEVEL
2000 ft.
4000 ft.
6000 ft.
8000 ft.
10,000 ft.
12,000 ft.
14,000 ft.
THIS CHART NOT TO BE USED FOR FLIGHT POWER SETTINGS CONSULT APPROPRIATE AIRCRAFT OPERATING MANUAL

3228

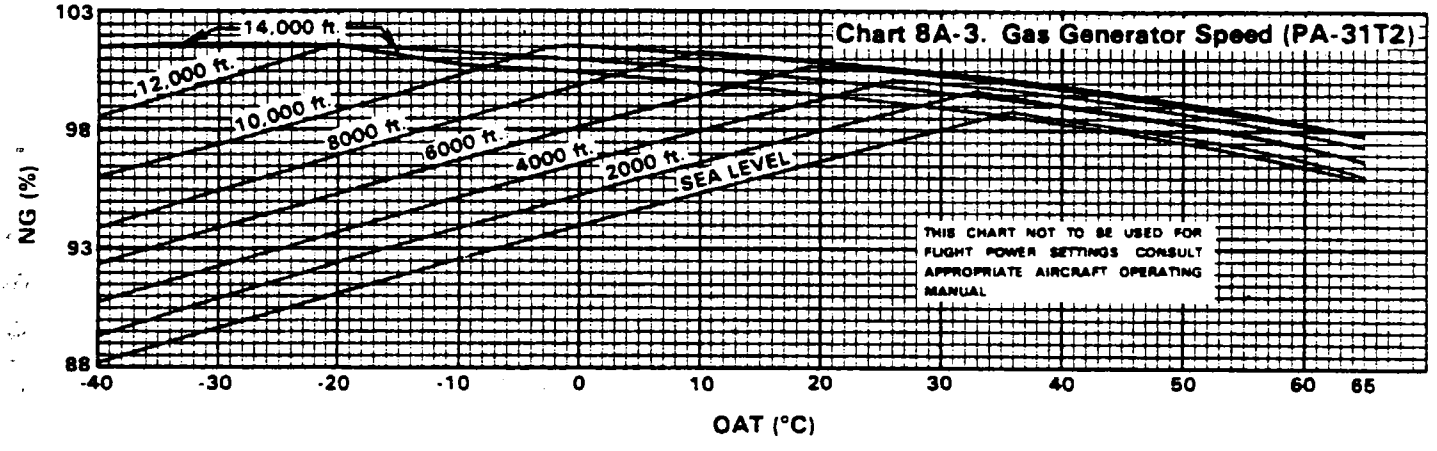
Chart 8A-3. Gas Generator Speed (PA-31T2)
NG (%)
103
98
93
88
-40
-30
-20
-10
0
10
20
30
40
50
60
65
OAT (°C)
14,000 ft.
12,000 ft.
10,000 ft.
8000 ft.
6000 ft.
4000 ft.
2000 ft.
SEA LEVEL
THIS CHART NOT TO BE USED FOR FLIGHT POWER SETTINGS CONSULT APPROPRIATE AIRCRAFT OPERATING MANUAL

3229

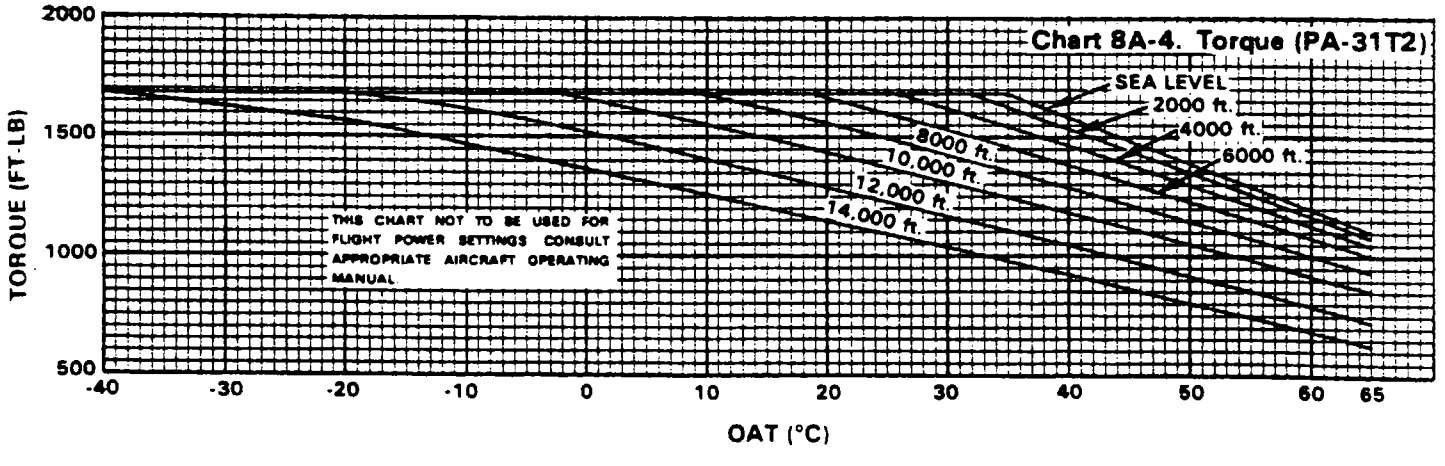
Chart 8A-4. Torque (PA-31T2)
TORQUE (FT-LB)
2000
1500
1000
500
-40
-30
-20
-10
0
10
20
30
40
50
60
65
OAT (°C)
SEA LEVEL
2000 ft.
4000 ft.
6000 ft.
8000 ft.
10,000 ft.
12,000 ft.
14,000 ft.
THIS CHART NOT TO BE USED FOR FLIGHT POWER SETTINGS CONSULT APPROPRIATE AIRCRAFT OPERATING MANUAL

3230

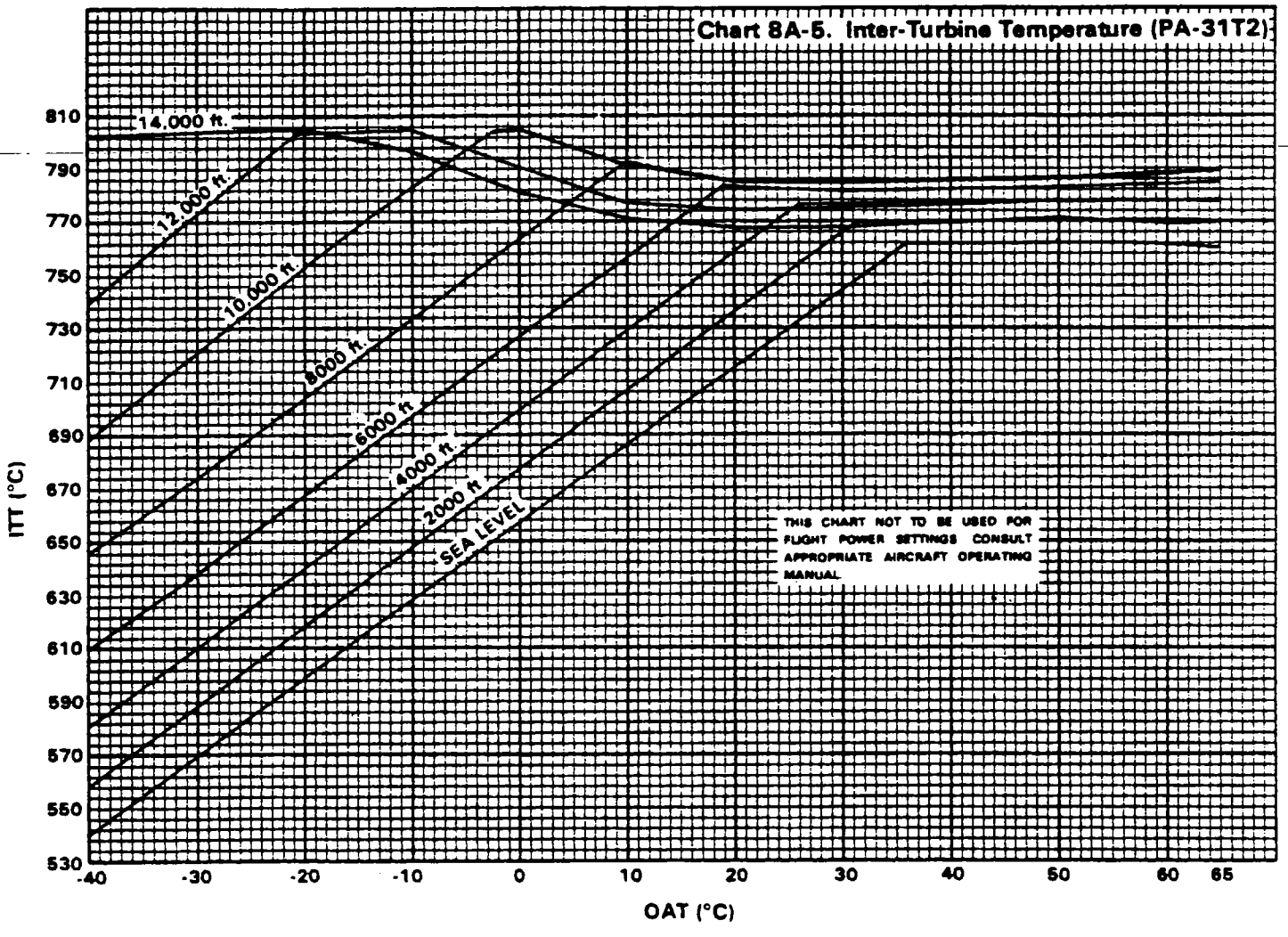
Chart 8A-5. Inter-Turbine Temperature (PA-31T2)
14,000 ft.
12,000 ft.
10,000 ft.
8000 ft.
6000 ft.
4000 ft.
2000 ft.
SEA LEVEL
THIS CHART NOT TO BE USED FOR FLIGHT POWER SETTINGS CONSULT APPROPRIATE AIRCRAFT OPERATING MANUAL
ITT (°C)
810
790
770
750
730
710
690
670
650
630
610
590
570
550
530
-40
-30
-20
-10
0
10
20
30
40
50
60
65
OAT (°C)

3348

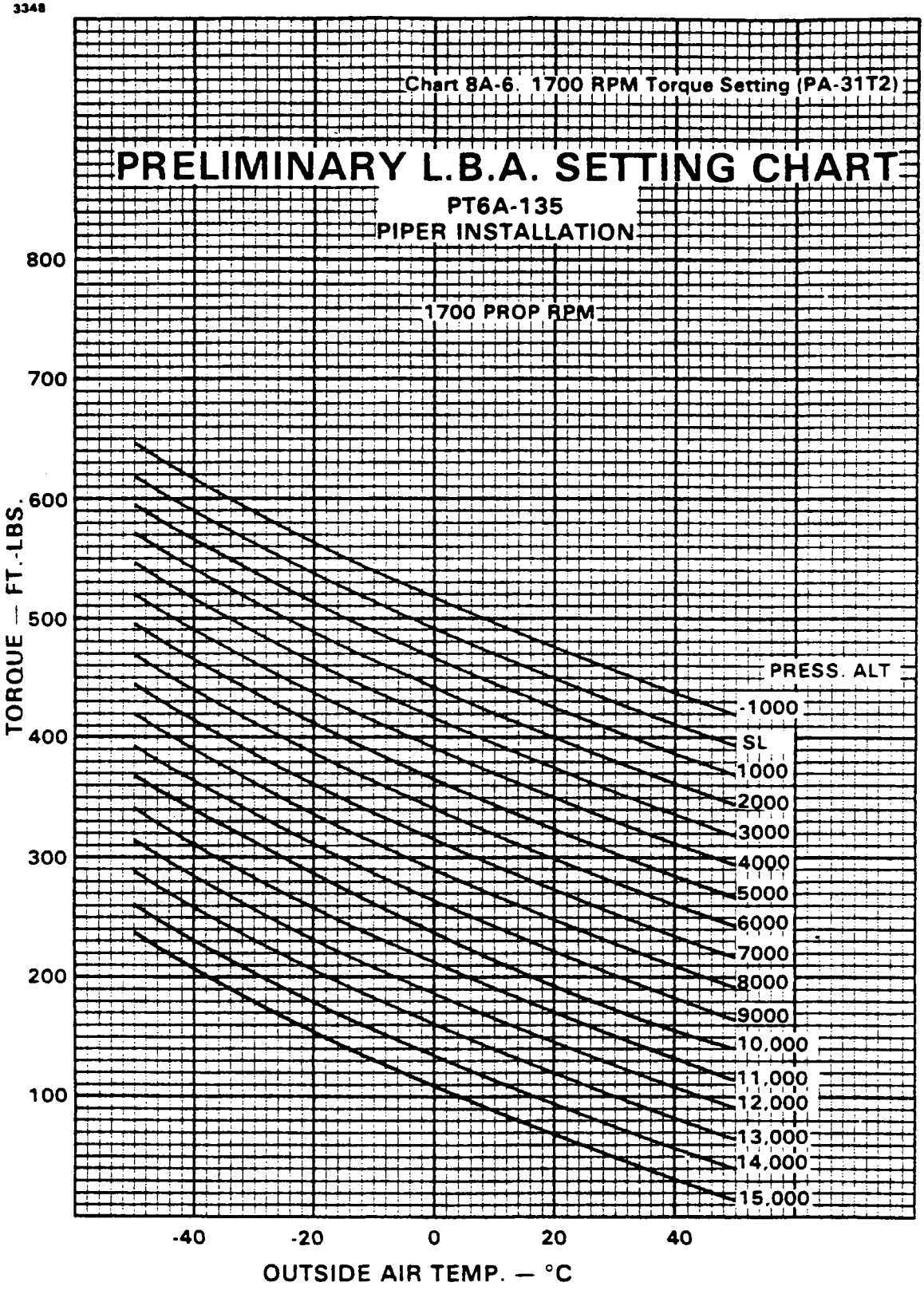

Added: 4/25/83

3C8

INTENTIONALLY LEFT BLANK

8A-63. ENGINE SHOCK MOUNTS.

NOTE

Refer to the latest revision to Lord Bulletin No. SM-6304 for all detailed information concerning cleaning, inspection, checking, disassembly and assembly instructions:

Lord Aerospace Products
1635 West 12th Street
Erie, Pennsylvania 16514

8A-63a. INSPECTION OF MOUNT ASSEMBLIES. Mounting assemblies of the LM-423, LM-423R and LM-4235 are to be visually inspected at each regularly scheduled inspection of the aircraft's engines, at each engine overhaul and at every 300 hours maximum. Inspect these mounting assemblies in their installed state by the following procedure:

a. Visually inspect all metal parts for cracks and excessive nicks, scratches or gouges.
b. Inspect all bolts, cotter pins and lockwires. Tighten and/or replace as required.
c. Inspect bonded sandwich mountings for metal-to-rubber bond separation or flex cracks.
d. Repair or replace any of the above components as required.

8A-63b. CLEANING MOUNT ASSEMBLIES.

CAUTION

DO NOT use cleaning solvents on bonded rubber parts.

Using a clean, dry cloth, wipe oil and dirt from the bonded rubber parts. Wash unbonded parts in dry cleaning solvent, federal specification number PS-661 or equivalent.

8A-64. REPLACEMENT OF SHOCK MOUNTS. (Refer to Figure 8A-6.) The engine shock mounts may be replaced as follows:

a. Remove the engine cowling.
b. Attach a sling to the engine lift points and using a one-half ton hoist relieve the tension on the mounts.
c. Remove the nut, washer, and bolt that attaches the mounting pad to the tubular engine mount.
d. Remove the safety wire from the mounting pad special bolts; remove the bolts and withdraw the mount assembly.
e. Install the mount assembly in reverse order of removal. Torque the pad mounting special bolts to 225 to 300 inch-pounds and safety with MS20995-C41 safety wire.
f. Torque the mount bolt to 450-500 in.-lbs. (Refer to Figure 8A-6, Section B-B.)

8A-65. ENGINE FIRE SEALS.

8A-66. GENERAL. The engine fire seals are bolted to the engine fire seal flange forward and aft of the engine compressor intake. The fire seals are constructed of semicircular sections and are designed to form a fire seal between the engine and cowling. The fire seals also provide a mounting location and support for lines, wire, and cables routed from the fire wall to the engine front accessories.

8A-67. ENGINE FUEL SYSTEM.

8A-68. GENERAL. The fuel control system consists of a single engine driven pump, a fuel control unit, start control, and a dual fuel manifold with seven nozzles per manifold. An automatic fuel dump valve and two combustion chamber drain valves are provided to insure drainage of residual fuel after engine shutdown. A scavenger pump system collects residual fuel after engine shutdown and injects the fuel into the aircraft fuel tank during engine start. Refer to Table VIIIA-II for appropriate Pratt and Whitney Engine Maintenance Manual for detailed information regarding removal, and inspections to the various engine fuel system components not covered in this manual.

8A-69. FUEL CONTROL UNIT.

8A-70. REMOVAL OF FUEL CONTROL UNIT.

a. Move the fire wall fuel shutoff to the off position.
b. Remove the engine cowling per Paragraph 8A-5.
c. Disconnect fuel inlet hose, outlet tube, pneumatic tubes, and fuel bypass tubes at the fuel control unit; cap all lines to prevent contamination.
d. Disconnect the fuel control unit interconnect rod at the fuel control unit.
e. Remove mounting nuts and washers that secure fuel control unit to the fuel pump and withdraw fuel control unit.

8A-71. PREPARATION FOR SHIPPING. Fuel control units taken out of service or being returned for overhaul should be preserved and packaged using the following procedure:

NOTE

Do not permit fuel or oil to enter the drive body cavity or any air pressure port.

a. Drain all residual fuel from the fuel section of the control and completely fill with clean oil conforming to Specification MIL-O-6081, Grade 1010. Tip the control as necessary to assure a complete film on all parts and passages in the fuel section.
b. After preservation is complete, drain the oil from the control and replace all caps and plugs previously removed.
c. When packaging the unit for shipping, be certain all shipping plugs and caps are secure. Place the unit in a moisture and vapor proof container or plastic bag and seal the bag. Pack the sealed unit in a shipping carton or case.

8A-72. PREPARATION FOR SERVICE. Prepare the fuel control unit for service using the following procedure:

a. Inspect all lockwire and lockwire seals. Return the unit for recalibration if any lockwire seal indicates tampering or if the wire is broken.
b. Units which have fuel sections preserved with oil are to be flushed with fresh fuel conforming to Specification MIL-F-7024A, Type II, and permitted to stand filled with fuel for eight hours minimum before operation.

NOTE

Do not permit fuel or oil to enter the drive body cavity or any air pressure port. Do not attempt to replace any lockwire seal until the unit has been checked to be certain calibration or operation has not been affected.

8A-73. INSTALLATION OF FUEL CONTROL UNIT.

CAUTION

If a replacement fuel control unit is to be installed, preservation oil must be removed. (Refer to Paragraph 8A-72.)

a. Check to be certain the fuel control unit drive coupling is properly installed in the fuel pump output drive. If coupling shaft was detached during control unit removal, reinstall by inserting male splined end in fuel pump and engaging pump output drive. Failure to install coupling will result in uncontrolled Ng increase.
b. Install new O-ring in recess of fuel pump mating face and install unit over studs. Insure coupling shaft is meshed properly. Secure unit with washers and self-locking nuts; torque 65 to 85 inch-pounds.
c. Connect fuel inlet hose and torque coupling nut 170 to 200 inch-pounds and lockwire.
d. Connect fuel outlet tube, fuel bypass tube, and pneumatic tubes to fuel control unit; torque coupling nuts 90 to 100 inch-pounds and lockwire.
e. Connect fuel control unit interconnect rod; torque nuts 24 to 36 inch-pounds and lock with cotter pin.
f. Perform an engine motoring run per Paragraph 8A-57 with starting control lever in run position.

8A-74. FUEL CONTROL UNIT CHECKS AND ADJUSTMENTS. The following checks and adjustments must be performed after a fuel control unit has been replaced:

a. Idle speed setting (refer to Paragraph 8A-59).
b. Maximum Ng speed (refer to Paragraph 8A-61).
c. Fuel control pneumatic system (refer to Table VIIIA-II for appropriate Pratt and Whitney Engine Maintenance Manual).

8A-75. FUEL CONTROL PNEUMATIC (P3) FILTER MAINTENANCE. The P3 filter is an inline type filter located in the Px line just aft of the rear fire seal. (Refer to Figure 8A-6, Item 15.) The filter should be removed and inspected for contamination at 100-hour intervals and replaced if necessary. A new filter should be installed every 1000 hours. Do not attempt to clean this filter with solvent (refer to the latest revision of Pratt and Whitney Field Note #872).

8A-76. FUEL MANIFOLD ADAPTER REMOVAL AND INSTALLATION. Before removing any adapters from the engine, each adapter should be marked using a suitable marker (refer to Table VIIIA-II for appropriate Pratt and Whitney Engine Maintenance Manual) to insure returning the adapters to their original position on the engine. Positions should be numbered clockwise 1 to 14, looking from the rear of the engine, with the number 1 position being at the 12 o'clock location. For complete removal, leakage test, and installation of manifold adapters, refer to Table VIIIA-II for appropriate Pratt and Whitney Engine Maintenance Manual.

8A-76a. FUEL NOZZLE ADAPTER INSPECTION. (Refer to Figure 8-11a.) Each time the fuel nozzle adapter is removed or installed:

a. With the nozzle adapter and sheath pressed together by hand and the pin engaged, check the clearance between the adapter and sheath all around with a feeler gauge. Maximum gap is .003 inch. A larger gap suggests that one or the other part is distorted and should be replaced.

b. With the nozzle adapter and sheath assembled together, carefully check the clearance around the fuel nozzle tip with the side of the hole in the sheath, this clearance must not be less than .020 inch. The shank of a No. 76 drill (.020 dia.) may be used for this purpose. If the clearance is less than this value at any point or if the drill could not be passed completely around the nozzle tip, determine by substitution which is the distorted part and discard.

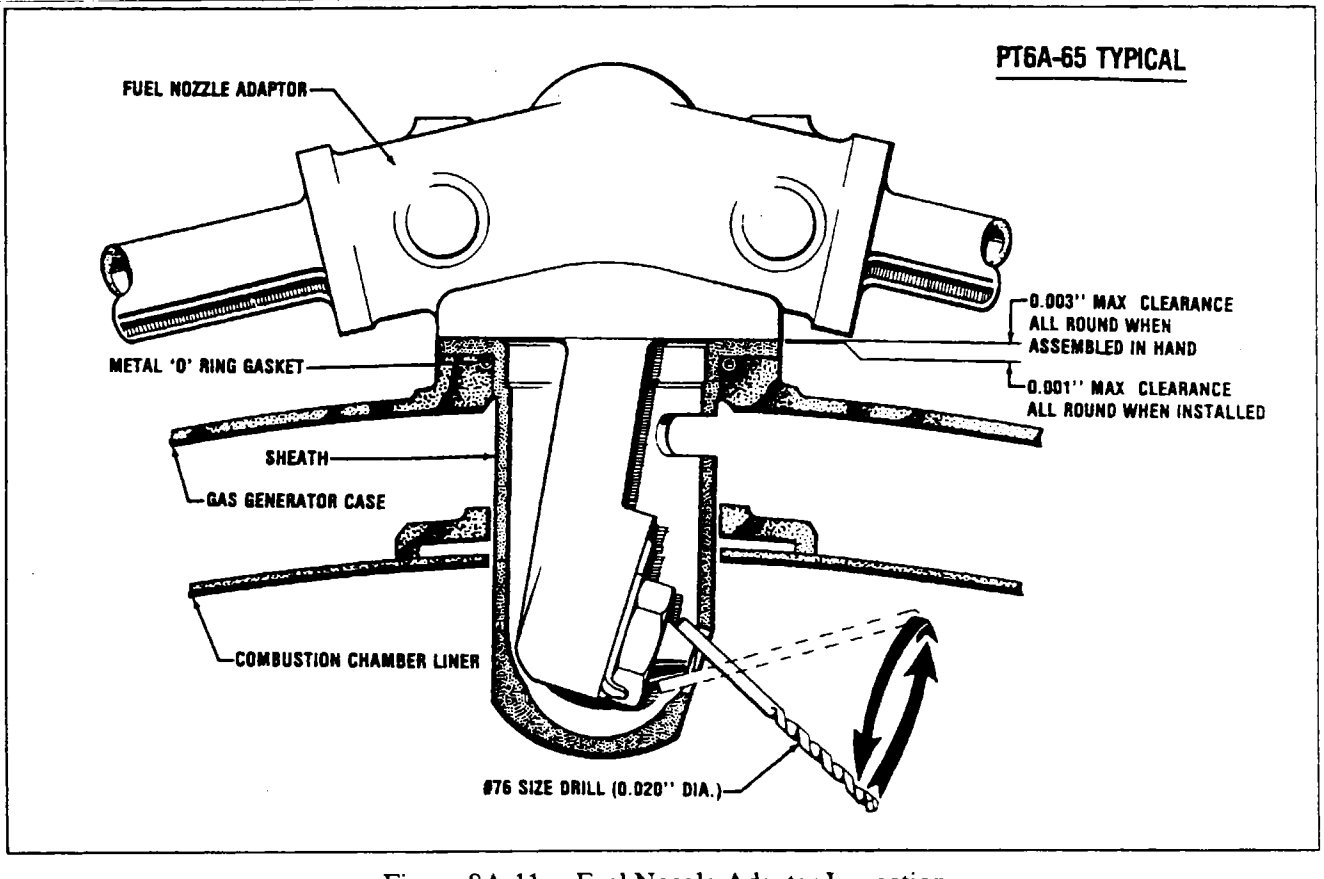

Figure 8A-11a. Fuel Nozzle Adapter Inspection

8A-77. FUNCTIONAL CHECK OF FUEL MANIFOLD ASSEMBLIES. Fuel nozzles may be tested alone or in their adapters, using the Pratt and Whitney Aircraft of Canada Ltd. test rig P/N CPWA30506 or by fabricating a test rig locally from information supplied with this text. (Refer to Figure 8A-12.)

CAUTIONS

The test rig must be grounded to prevent possible danger of electrostatic discharge.

Observe all fire precautions when working with fuel.

a. Using the fabricated test rig, set the regulator to zero, close the outlet valve (20), open filler valve (6) and remove plug (11).

CAUTION

Insure that all pressure if any is relieved from the tank before opening the filler valve (6), or removing plug (11).

b. Fill the tank (1) approximately 3/4 full with clean fuel and close the filler valve (6) and replace the plug (11).

c. Install a fuel nozzle with or without its adapter using a mounting bracket if desired. Refer to Figure 8A-12 for view of mounting bracket.

d. Set the regulator to obtain 12.5 psig on the pressure gauge (19).

e. Holding the plug (23) against the transfer tube and nozzle adapter (if no bracket is used), gradually open the outlet valve (20).

f. A good clean spray should appear at less than 12.5 psig, free from spitting or drooling.

g. Increase the pressure to 60 psig. The volume of the spray should increase. There should be a maximum of 12% streakiness and the spray should be evenly spread about the center axis of the nozzle orifice.

NOTE

Streakiness is defined as variation of spray quantity in different parts of the spray cone, showing up as darker streaks in the spray.

h. If spitting or drooling occurs at 12.5 psig, or more than 12 percent streakiness is evident at 60 psig, reject the fuel nozzle and install a new nozzle.

i. If necessary, remove carbon buildup at the fuel nozzle by lightly brushing the orifice face with either a bronze or non-metallic bristled brush. Cleaning must be accomplished while fuel is flowing through the nozzle.

j. Close the pressure regulating valve (5) and allow the pressure gauge to decrease to zero, then close valve (20).

NOTE

It is suggested that a few new nozzles be tested in order to recognize a good spray pattern.

8A-78. FUEL SCAVENGER SYSTEM The purpose of the fuel scavenger system is to collect residual fuel after engine shutdown and return the fuel to the nacelle fuel tank during engine start. The system consists of a solenoid valve, a jet type pump with an integral reservoir mounted on the side of the oil cooler duct below the accessory gearbox housing, a check valve, and the necessary lines and tubing interconnecting the system.

The system operates during engine shutdown and startup only. When the engine is shutdown, residual fuel is drained into the scavenger pump reservoir from the fuel nozzles. During engine startup, a solenoid valve is energized allowing engine purge fuel to enter the scavenger pump jet. The high velocity fuel from the jet picks up the fuel in the reservoir and returns the fuel to the nacelle tank. When the starter is released, the solenoid valve is returned to the closed position. An overboard vent line is attached to the scavenger pump in the event of a malfunction. The presence of fuel being vented overboard indicates the system is not operating properly. Maintenance to the system is limited to checking the solenoid valve and check valve for proper operation and examining lines and tubing for obstructions or leakage. (Refer to Table VIIIA-III for Troubleshooting procedures.)

TABLE VIIIA-III. TROUBLESHOOTING CHART (FUEL SCAVENGER SYSTEM)

Trouble	Cause	Remedy
Fuel being drained overboard during engine start.	Defective check valve.	Replace check valve.
	Restricted jet pump nozzle.	Remove nozzle and clean. Check for proper seating of jet.
Fuel being drained overboard during engine shutdown.	Solenoid valve not opening.	Check operation and replace if necessary.
Fuel being drained overboard with full tip tanks.	Defective check valve.	Replace check valve

8A-79. IGNITION SYSTEM

8A-80. GENERAL. The ignition system consists of one exciter box, two ignition leads, and two spark igniters for each engine.

The igniters are of the low voltage or shunted surface gap type, requiring about 8000-volts to spark. Ignition is by both igniters simultaneously; there is not provision for single igniter operation. D.C. power is delivered to the exciter box from the respective engine bus through a series hookup of an ignition selector switch in the engine control switch panel, and a micro switch located on the start control lever, so that no power is available to the exciter box until both switches have been actuated. The ignition cutoff switch will not be actuated until the start control lever has been moved out of the cutoff position.

For information regarding the items installed on the engine and functional check of the system, refer to Table VIIIA-II for appropriate Pratt and Whitney Engine Maintenance Manual

WARNING

Observe the necessary safety precautions when working with the high voltage ignition system. Allow at least 6 minutes after the ignition system is turned off before touching the ignition system. This is a 4.7 joule system and is capable of killing if improperly handled.

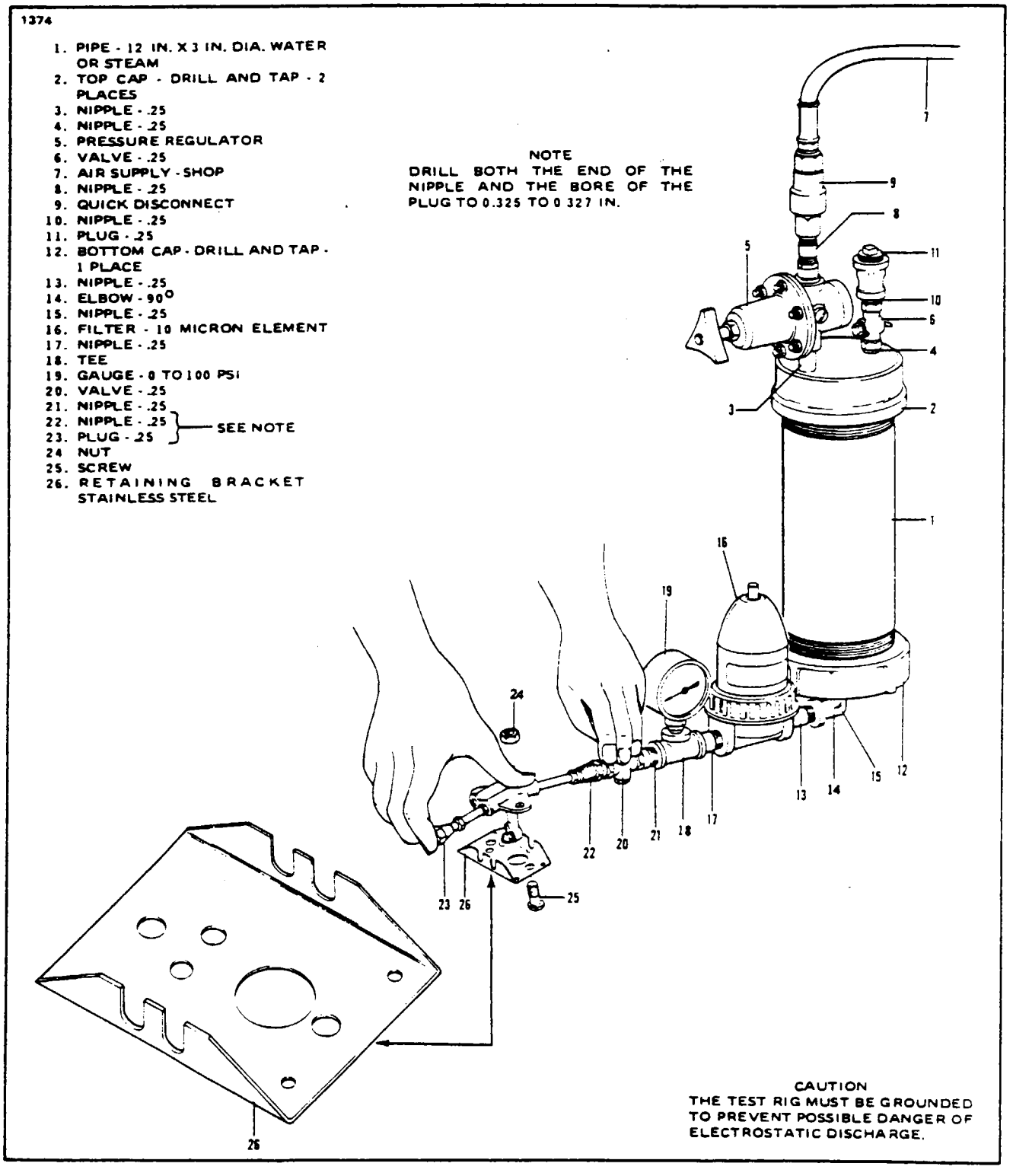

Figure 8A-12 Fuel Manifold Test Rig

8A-81. CHECKING IGNITION SYSTEM. A common cause of ignition problems is the low battery. Before inspecting the ignition system, try a normal start with a auxiliary power unit. If engine will not start proceed to check ignition system. The ignition system requires at least 9 volts to spark.

During the following procedure, it is recommended that an auxiliary power unit (APU) be used for motoring runs and start attempts to eliminate the possibility of low voltage at the exciter box and/or excessive battery drain.

WARNING

Do not turn on ignition before motoring engine 15 to 20 seconds prior to proceeding to step a.

a. Turn on battery master switch, ignition arm switch, and advance the condition lever to "run" (Engine not rotating) Listen for spark. If spark is audible, ignition is satisfactory.

1. Proceed as follows if spark is not audible as noted in Step a:
   (a) Disconnect the battery.
   (b) Remove one or the other engine igniters and touch lead end against engine case to be sure no residual charge is retained.
   (c) While the lead is disconnected install a new igniter on the end of the harness.

CAUTION

Hold the igniter stationary, insert the rubber lead into the igniter and tighten the nut finger tight. Do Not rotate the igniter after the rubber has been inserted, or the lead will be damaged. Turn the nut to prevent damaging the lead.

(d) Allowing the igniter to hang on the lead, reconnect the battery.

CAUTION

Be sure all personnel are clear of the ignition system and that the igniter is not near an explosive mixture, such as spilled fuel or solvents.

(e) Turn on master switch, ignition arm switch and advance the condition lever to "run" Ignition should fire one to two times per second depending on voltage.

(f) If ignition is firing satisfactorily as noted in Step (e) proceed as follows:
  (1) Secure engine by moving the condition lever to "Stop", ignition switch off. and turn battery-master switch off,
  (2) Install new igniters in the engine and reconnect the harness.

(g) Check the operation of new installed igniters by performing a normal start. If the aircraft is not in a position for starting the engine, perform the following:
  (1) Turn the battery master switch "ON".
  (2) DO NOT turn the Ignition Switch "ON".
  (3) DO NOT turn the Fuel Pump "ON".
  (4) Turn the Starter Switch "ON" and motor the engine for 15-20 seconds.
  (5) Turn the Starter Switch "OFF" and allow the engine to come to a complete stop.
  (6) Turn the Ignition Switch "ON".
  (7) DO NOT turn the Starter Switch "ON".
  (8) With the engine not rotating, advance the CONDITION lever to "RUN". Listen for spark. If sparking is audible, ignition is satisfactory.
  (9) Secure engine by turning the CONDITION lever to "STOP" Ignition Switch "OFF" and Battery Switch "OFF".

(h) If engine will not start, or if the ignition is NOT firing, secure the engine using normal procedures and perform the following:
  (1) Remove the electrical plug from the primary end of the exciter box and with a Volt Ohmmeter, check for 24 volts between pin A+ and B (the master switch and ignition switch must be "ON" and the start control full forward).
  (2) If 24 volts are present on the primary side and no ignition, attach a new harness to one side of the box. Install the new igniter on this lead and try for ignition (master "ON", ignition "ON" and start control forward). If no spark – replace exciter box.
  (3) Check the operation of the newly installed exciter box by repeating g above, for testing igniters in the engine.

(i) If engine does not start, check the fuel system for proper operation.

8A-82. IGNITION CUTOFF SWITCH REMOVAL AND INSTALLATION. The ignition cutoff switches are mounted in the same manner as the landing gear warning switches. Refer to Section VII, for removal and installation instructions

8A-83 IGNITION CUTOFF SWITCH ADJUSTMENT. The ignition cutoff switches are located in the control pedestal and are activated by the start control lever

a Set the start control levers in the cutoff position.

b. With the adjustment screw on the switch bracket, adjust each switch separately toward the start control lever until the switch is heard to actuate 1 inch of forward travel. The adjustment screw may be reached by inserting a long screwdriver through the travel slot of the start control lever in the pedestal cover

c. Check adjustment of switch.

8A-84. IGNITER PLUG CLEANING AND INSPECTION.

a. Cap the cable terminal end of the igniter plug to prevent entry of foreign material during cleaning.

b. Use a soft wire brush to clean the plug barrel and a cloth buffing wheel for threads. The electrode end of the igniter plug should never be cleaned. Any carbon on the tip aids operation of the plug.

CAUTION

Never sandblast or use a liquid suspended abrasive for cleaning igniter plug. Any abrasive action removes semi-conductor material in gap area and adversely affects functioning of the plug.

c. Blow any loose carbon or other loose foreign material from igniter plug with an air blast.

d. Remove cap from cable terminal end and wipe igniter plug with a lint-free cloth dampened in Methylethylketone. Dry with an air blast.

e. Inspect the terminal end of the plug for any visible evidence of damage. Minor nicks, burrs, or slightly damaged threads may be corrected using a fine file. Reject the plug if any of the following conditions exist:

NOTE

Check plug manufacturer's tolerances for wear limits, or Pratt and Whitney Engine manual. (Refer to Table VIIIA-II for appropriate Pratt and Whitney Engine Maintenance Manual.)

1. Insulator broken, cracked or loose.
2. Input connector pin noticeably damaged or bent.
3. Center electrode badly burned, broken or pitted.
4. Flange and metal shield of firing end is bent, grooved or eroded. Mating surface of flange must be flat and smooth.

8A-85. LUBRICATION SYSTEM.

8A-86. GENERAL. The engine lubricating system supplies lubricating oil under pressure to the necessary engine components by a main pressure pump located in the oil tank. Oil pressure is regulated by a plunger-type pressure relief valve secured to the top of the main oil pressure pump. The oil cooler is located under the rear accessory gearbox housing and is attached to the fire wall and oil cooler duct

8A-87. OIL COOLER.

8A-88. REMOVAL OF OIL COOLER.

a. Remove the engine cowling.

b. Remove the access panels on the nacelle.

c. Disconnect the drain lines attached to the oil cooler duct.

d. Disconnect the oil cooler inlet and outlet lines at the oil cooler and cap the lines to prevent contamination.

e. Drain the oil cooler.

f. The duct assembly is riveted to the lower section of cowl fire seal assembly Release the duct assembly by removing the hardware which secures the lower section of the cowl fire seal assembly to the two upper seal assemblies.

g. Remove the attachment hardware connecting the cooler to the duct assembly and fire wall and lower the oil cooler from the aircraft.

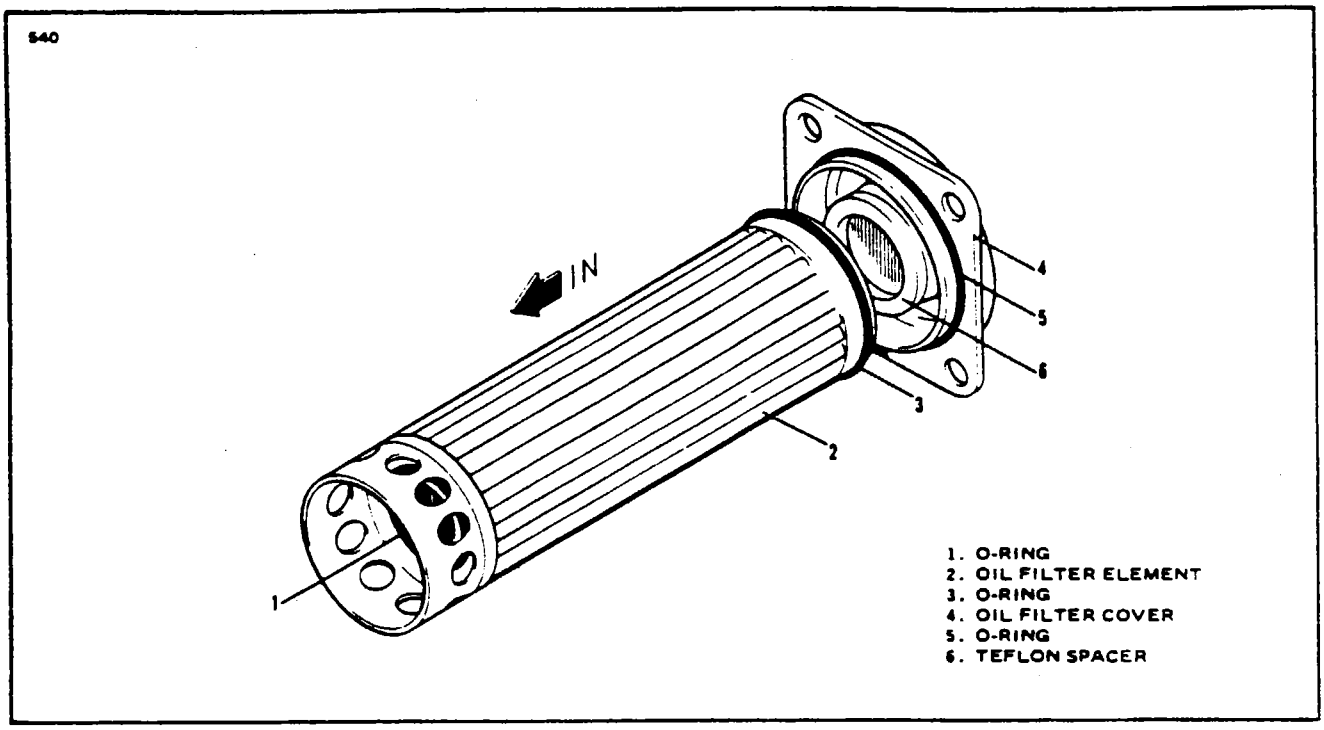

Figure 8A-13. Oil Filter Element

8A-89. INSTALLATION OF OIL COOLER.

a. Position the oil cooler on the fire wall and install the mounting hardware. Install the attachment hardware connecting the oil cooler to the oil cooler duct.

b. Install the hardware securing the lower section of the cowl fire seal assembly to the two upper sections of the fire seal assembly.

c. Attach the drain lines to the oil cooler mounting bolts.

d. Connect the oil cooler inlet and outlet lines to the respective connection on the oil cooler. Install oil cooler drain plug and safety.

e. Perform an engine motoring run per Paragraph 8A-57 to check for oil leaks

f. Recheck the oil level and fill as required.

g. Install the access panels on the nacelle.

h. Install the engine cowling.

8A-90 OIL FILTER ELEMENT REMOVAL AND INSTALLATION (Refer to Figure 8A-13)

a. Remove the oil filter element by removing the four self-locking nuts and plain washers that secure the filter cover to the right side of the compressor inlet case at the 3 o'clock position.

b. Remove the filter cover and O-ring. discard the O-ring.

c. With the use of the filter removal tool (CPWA30328). withdraw the filter element from the filter body and discard the O-ring from the element.

NOTE

The non-cleanable filter P/N 3024084 will replace the cleanable type filter P/N 3022070 and has a service life of 1,000 hours. Cleanable filter elements 3017383 and/or 3022069 will be available from spare parts sales for those operators who wish to continue using this type filter.

d. Install the filter element in reverse order of removal (perforated flange first) using new O-rings.
e. Insure that teflon spacer is in position on lugs of filter cover.
f. Install cover and secure with four plain washers and self-locking nuts. Torque nuts 24 to 36 inch-pounds.

NOTE

Those who choose to retain the non-cleanable filter must insure that maintenance procedures prevent attempted ultrasonic cleaning of these parts.

8A-91. CLEANING PROCEDURES FOR CLEANABLE FILTER ELEMENTS. In aircraft with a typical utilization of fifty hours per month or less, the element must be cleaned every 400 hours or 9 months whichever comes first. With the filter removed, clean the element in accordance with instructions found in Pratt and Whitney Engine Maintenance Manual.

8A-92. BLEED AIR SYSTEM.

8A-93. GENERAL. The engine has three separate air bleed systems: a compressor air bleed control, a bearing compartment air seal and bleed system, and a turbine disc cooling system. Engine compressor bleed air is used to provide high pressure air for cabin pressurization.

Compressor bleed valve malfunction may cause unsatisfactory part power and performance checks. For symptoms of compressor bleed valve malfunction, refer to Table VIIIA-II for appropriate Pratt and Whitney Engine Maintenance Manual.

8A-94. ENGINE INDICATING SYSTEMS.

8A-95. DIGITAL/ANALOG TORQUE INDICATING SYSTEM.

8A-96. GENERAL. The torque pressure system consists of a pressure transmitter mounted on the reduction gearbox case, and a torquemeter indicator mounted in the instrument panel. The torque pressure value is obtained from the pressure transmitter which monitors the pressure differential between the two outlets on top of the reduction gearbox case.

8A-97. CALIBRATION TEST. (Refer to Figure 8A-14.)

a. Remove the hose from the high pressure port on the transmitter.

b. Connect a suitable pressure system tester to this port, but do not remove the vent line from the transmitter.

c. Attach a 28VDC power source to the external power receptacle.

d. Ascertain that pressure test unit is set at 0 psi.

e. Activate D.C. power source.

f. Increase pressure to the transmitter to 50 psi and check reading. Readings must remain in the tolerances as specified in Table VIIIA-IV.

g. If necessary, adjust the gauge to obtain the correct torque readings. The gauge adjustment is located behind the gauge. Turn the adjustment accordingly to correct the torque reading.

h. Decrease pressure to the transmitter to 25 psi and check reading. (Refer to Table VIIIA-IV.) If necessary, increase pressure back to 50 psi and adjust indication upwards or downwards in order to obtain an indication at 25 psi that falls within tolerances listed.

i. After completion of adjustments to the gauge at 50 psi, recheck and assure they remain within the tolerances specified in Table VIIIA-IV.

j. Check from 0 to 55 psi. Ascertain that all readings remain in the tolerances as specified in Table VIIIA-IV.

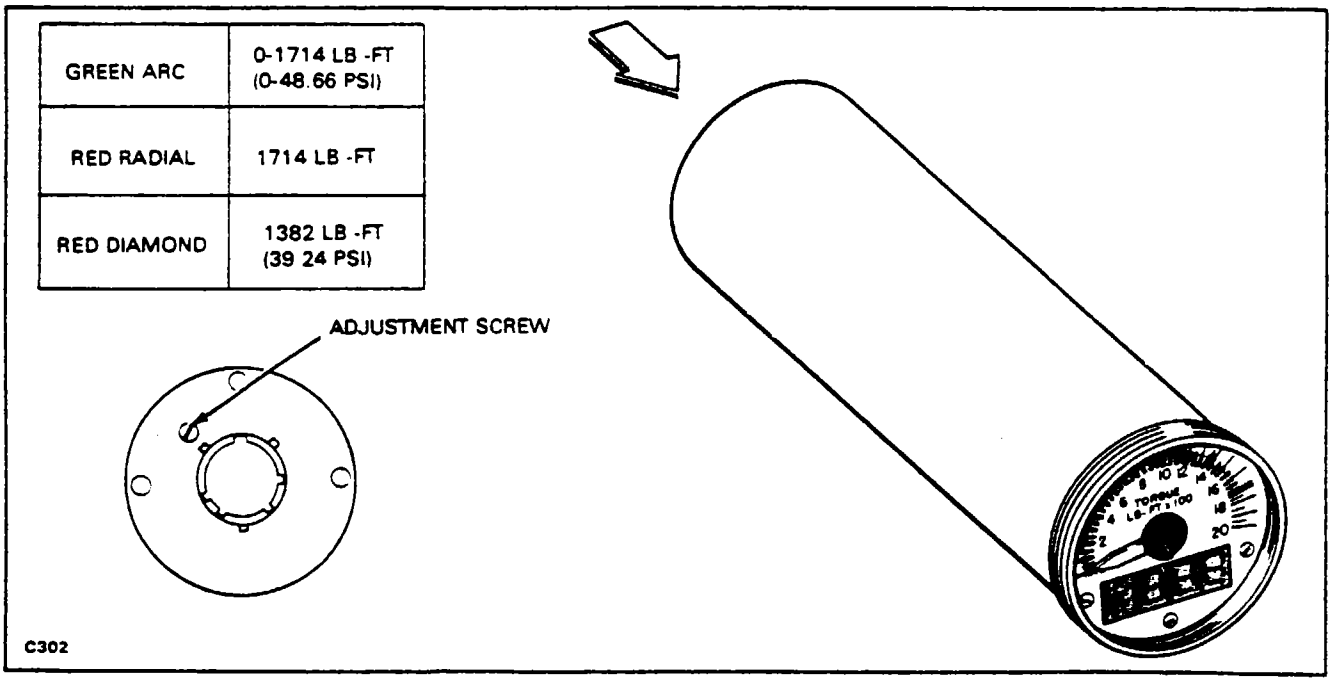

Figure 8A-14. Digital/Analog Torque Calibration

TABLE VIIIA-IV. DIGITAL/ANALOG TORQUE CALIBRATION DATA

TEST UNIT PSI	DIGITAL PA-31T2 PS50154-4	DISPLAY MAX. ERROR	ANALOG DISPLAY READOUT
0	BLANK	0	NEEDLE MOVEMENT SHALL BE SMOOTH WITH NO JUMPS AND ACCURACY SHALL BE ± 1.5% OF FULL SCALE
5	176	± 25	
10	352	± 25	
15	528	± 25	
20	704	± 15	
*25	880	± 10	
30	1057	± 10	
35	1233	± 10	
40	1409	± 15	
45	1585	± 15	
*50	1761	± 15	
55	1937	± 15	
60	—	± 25	

PPS 80112

THIS SPACE INTENTIONALLY LEFT BLANK

8A-98. INTER-TURBINE TEMPERATURE SENSING SYSTEM (ITT).

8A-99. GENERAL. The inter-turbine temperature sensing system (T5) is designed to monitor engine operation temperatures at a point between the two turbines. The system consists of a thermocouple assembly, trim harness and an instrument panel-mounted indicator. Refer to Table VIIIA-II for appropriate Pratt and Whitney Maintenance Manual for detailed information.

8A-100. RESISTANCE CHECK OF INTER-TURBINE TEMPERATURE SYSTEM. (Refer to Figure 8A-15.) This check may be performed by using a Turbine Temperature Indicating System Test Set (Barfield) 2312G-8. Barfield Inst. Corp., 4101 N.W. 29th St., Miami, Florida 33142 or equivalent). Read complete test set instruction manual before attempting to use the unit.

a. Check continuity and loop resistance measured across chromel and alumel terminals of terminal block. Acceptable loop resistance is 0.5 to 1.0 ohm with the aircraft harness disconnected from the engine terminals.

CAUTION

The thermocouples will generate a small potential which will produce errors in the measured values if this check is made while the engine is hot.

NOTE

If several probes are broken or damaged internally, the loop resistance would not necessarily fall outside the allowable tolerance. However, erroneous temperature indications could occur because of the resultant unbalance in the harness circuit.

b. Check insulation resistance of harness at terminal block. When measured from either chromel or alumel terminal to ground, minimum acceptable resistance is 5000 ohms. (Refer to Figure 8A-16.)

c. Check the resistance of the aircraft harness with the engine harness disconnected, and the red and yellow wires temporarily bolted together instead of connected to the ITT indicator terminals. The value should be approximately 7.63 ± .1 ohms.

8A-101. INTER-TURBINE TEMPERATURE CALIBRATION CHECK. (Refer to 8A-17.)

a. Remove yellow and red wires from the heat probe terminal that go to the ITT gauge.

b. Connect the wires to the Barfield (2312G-8) test set or equivalent, and the Digital Multimeter.

c. Position the Barfield Instrument function switch to Indicate and the Digital Multimeter to DCV and 1 position.

d. Check the ITT gauge for each temperature indication by the following:

1. While pressing the test switch and turning the calibration adjustment knob on the Barfield instrument, obtain the proper mv (millivolts) indicated on the multimeter for the appropriate temperature given on the chart.

2. Check each temperature indication and tolerance with the appropriate mv (millivolts).

8A-102. TACHOMETER-GENERATORS (PROPELLER AND GAS GENERATOR).

8A-103. GENERAL The propeller (Np) and gas generator (Ng) tachometer-generators produce an electric current which is proportional to gas generator and propeller speed. The electric current is monitored by tachometer indicators mounted in the instrument panel which indicate propeller and gas generator speed. The gas generator tachometer-generator is mounted on the backside of the accessory gearbox and rotates counterclockwise. The propeller tachometer-generator is mounted on the right side of the reduction gearbox case and rotates clockwise.

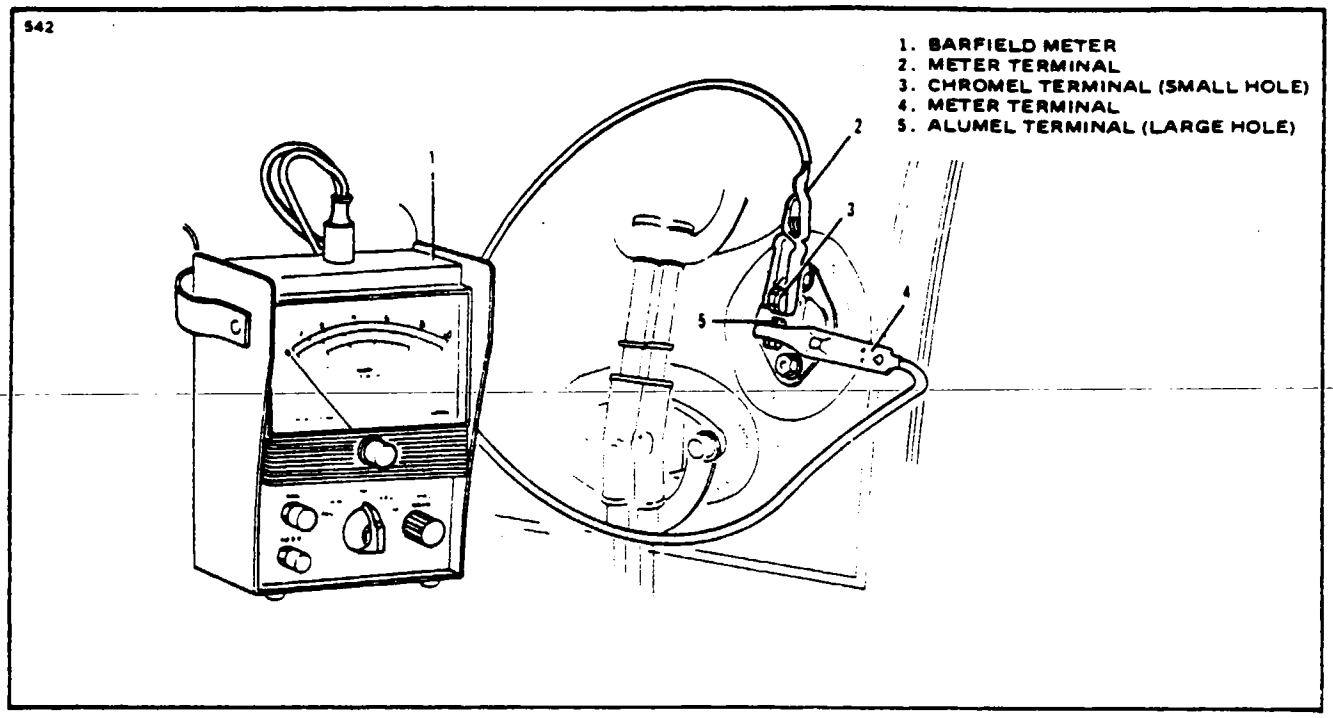

Figure 8A-15. T5 Thermocouple Harness Loop Resistance Check

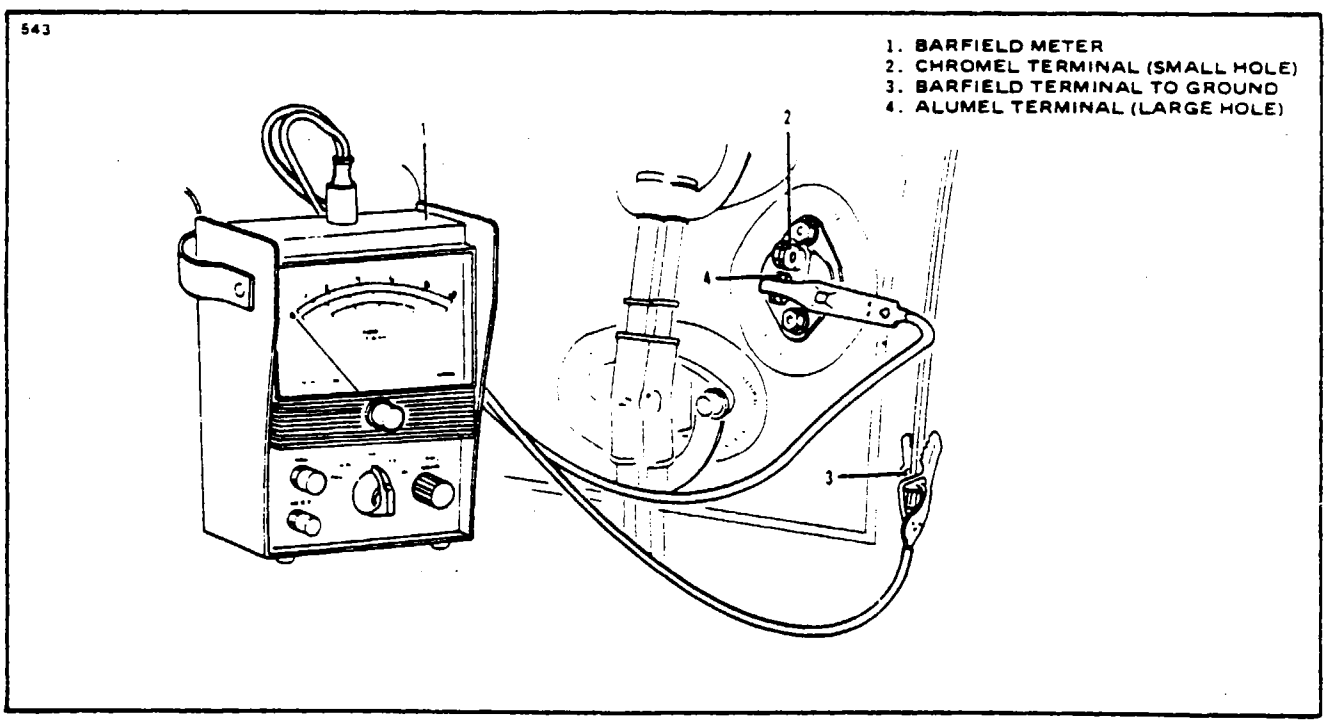

Figure 8A-16. T5 Harness Insulation Resistance Check

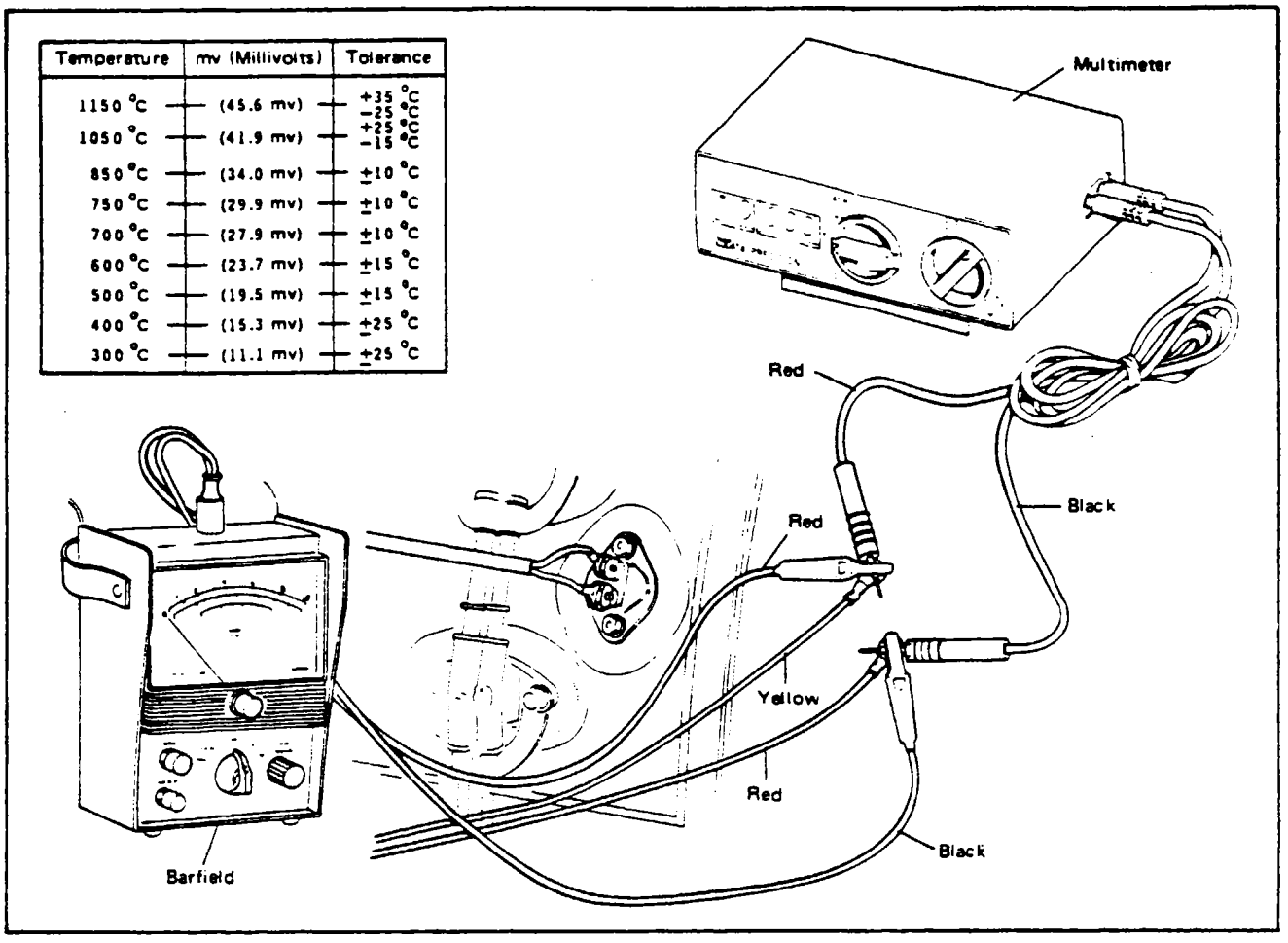

Temperature	mv (Millivolts)	Tolerance
1150 °C	(45.6 mv)	+35 °C −25 °C
1050 °C	(41.9 mv)	+25 °C −15 °C
850 °C	(34.0 mv)	±10 °C
750 °C	(29.9 mv)	±10 °C
700 °C	(27.9 mv)	±10 °C
600 °C	(23.7 mv)	±15 °C
500 °C	(19.5 mv)	±15 °C
400 °C	(15.3 mv)	±25 °C
300 °C	(11.1 mv)	±25 °C

Figure 8A-17. Inter-Turbine Temperature Calibration Check

8A-104. REMOVAL AND INSTALLATION.

a. Disconnect the electrical connector from the generator unit.
b. Remove the four mounting nuts at the base of the generator.
c. Pull the unit straight out and away from the mounting lugs.

NOTE

Cover the tach generator mounting pad to prevent foreign material from entering the engine.

d. To reinstall the generator unit, place a new gasket on the mounting pad.
e. Lubricate the generator unit shaft splines with Molybdenum Disulfide, Type "G," paste form lubricant.
f. With the electrical socket pointing down, slide the generator into place over the mounting studs.
g. Secure the unit in place with the four mounting nuts and torque to 65 to 85 inch-pounds.

8A-105. ENGINE CONDITION TREND MONITORING SYSTEM. Contemporary gas turbine engine maintenance systems frequently include inflight engine performance monitoring, as a means of detecting mechanical deterioration in engine gas paths. A simple system requiring almost no arithmetic calculation has been devised for PT6 Engines to aid in planning indicated rectifications early, and so reduce primary and secondary damage costs resulting from fully developed failures, and risks of inflight shutdowns and flight cancellations.

The Engine Condition Trend Monitoring System has been set up by Pratt and Whitney Aircraft of Canada Limited in order to maintain efficient engine performance. This is not a mandatory procedure, but is highly recommended by Pratt and Whitney and Piper Aircraft Corporation. Copies of the procedure can be obtained from Pratt and Whitney. Refer to the latest revision of Pratt and Whitney Information Letter # 15, Aircraft Gas Turbine Operation, for more information.

8A-106. ENGINE WIRING HARNESS 500 HOUR INSPECTION. Each 500 hours, inspect the engine wiring harness where it crosses the hot section.

a. Remove the metal heat resistant tape from the engine wiring harness where it crosses the hot section.
b. Inspect the wiring harness for heat damage or deterioration. Repair or replace as required.
c. Reinstall metal heat resistant tape

THIS SPACE INTENTIONALLY BLANK

TABLE VIIIA-V. TROUBLESHOOTING CHART (ENGINE)

Trouble	Cause	Remedy
Engine fails to start.	No fuel supply to engine.	Check for clean fuel supply at fire wall shutoff valve.
	Air in fuel system.	Perform motoring run. (Refer to Paragraph 8A-57.)
	Open ignition circuit.	Check wiring and connections.
	Defective engine driven fuel pump.	Check for flow from pump while motoring engine. If no flow, replace pump.
	Defective fuel control unit.	Check for flow from FCU outlet tube to starting flow control while motoring engine. If no flow, remove FCU, check bypass valve by applying 5 psi max. to bypass return port and check for air leakage from FCU inlet. If leakage is evidenced, replace fuel control unit and fuel pump. If no leakage, replace only FCU.
	Defective starting flow control.	Disconnect primary tube and check for evidence of flow while motoring engine with start control lever in run position. If no flow, replace starting flow control.
	Restricted fuel nozzles.	Clean and check nozzles. (Refer to Engine Maintenance Manual.)

TABLE VIIIA-V. TROUBLESHOOTING CHART (ENGINE) (cont.)

Trouble	Cause	Remedy
Engine does not idle properly.	Idle speed setting incorrect.	Adjust idle speed and minimum flow as required. (Refer to Paragraph 8A-59.)
	Leak or restriction in FCU pneumatic system.	Check all pneumatic tubes and connections for leakage.
Engine does not accelerate properly.	Leak or restriction in fuel control pneumatic system.	Check all connections for leakage. Check for dirt in Px metering orifice. (Refer to Engine Maintenance Manual for cleaning instructions.)
	Defective fuel control unit.	Replace fuel control unit.
Engine does not decelerate.	Power control linkage adjusted incorrectly.	Adjust linkage. (Refer to Paragraph 8A-37.)
	Defective fuel control unit.	Replace fuel control unit.
Engine does not develop full power.	Faulty engine instrumentation.	Check instrument system. Replace or recalibrate as necessary. If torquemeter system defect is established, return power section to overhaul facility for repair.

TABLE VIIIA-V. TROUBLESHOOTING CHART (ENGINE) (cont.)

Trouble	Cause	Remedy
Engine does not develop full power (cont).	Control linkage adjusted incorrectly.	Check adjustment. (Refer to Paragraph 8A-38.)
	Propeller governor pneumatic section adjusted incorrectly.	Adjust. (Refer to Paragraph 8A-27.)
	Leak or restriction in fuel control pneumatic system.	Check all tubes for restrictions and connections for leakage.
	Engine power settings not adjusted correctly.	Check adjustment settings. (Refer to Paragraph 8A-59.)
	Defective fuel control unit.	Replace fuel control unit.
	Restricted fuel nozzles.	Clean and check nozzles. (Refer to Engine Maintenance Manual.)
Excessive vibration.	Propeller out of balance.	Replace propeller.
	Compressor or compressor turbine disc out of balance.	Return disc to an overhaul facility. (Refer to Engine Maintenance Manual.)
Low oil pressure.	Oil pressure indicating system defective.	Check system and repair as necessary.
	Insufficient oil.	Fill oil tank as required.
	Excessive hot air leakage through faulty heat shielding.	Replace engine.
	High oil temperatures.	Check cooling system.

TABLE VIIIA-V. TROUBLESHOOTING CHART (ENGINE) (cont.)

Trouble	Cause	Remedy
High oil temperature.	Insufficient oil supply.	Refill oil tank as required.
	Faulty instrumentation.	Check instrumentation, repair or replace as required.
	Cooling system defective.	Check system and clean cooler if required.
	Excessive hot air leakage through faulty heat shielding.	Replace engine.
Excessive oil consumption.	Leakage or restriction in pressure or scavenger oil tubes.	Visually inspect all tubes and connections. Repair as required.
	Oil level too high.	Maintain correct oil level.
	Defective Labyrinth seals.	Check inlet and exhaust areas for collections of oil. If evident, replace engine.
	Defective oil to fuel heater (internal leakage).	Pressure check heater. (Refer to Engine Maintenance Manual.)

SECTION IX
FUEL SYSTEM

Paragraph			Aerofiche Grid No.
9-1.	Introduction		3D9
9-2.	Description and Principle of Operation.		3D9
9-3.	Troubleshooting		3D9
9-4.	Fuel Cells and Tanks		3D14
	9-5.	Removal of Wing Tip Tanks	3D14
	9-6.	Installation of Wing Tip Tanks	3D14
	9-7.	Removal of Wing Fuel Cells	3D14
	9-8.	Cleaning, Inspection and Repair of Fuel Cells	3D17
	9-9.	Fuel Cell Compartment	3D19
	9-10.	Molded Nipple Fittings	3D19
	9-11.	Installation of Inboard and Outboard Fuel Cell	3D19
	9-12.	Handling and Storage of Fuel Cells	3D21
	9-13.	Repair of Fuel Cells	3D21
	9-14.	Handling of Repair Materials	3D21
	9-15.	Repair Procedures of Goodyear Vithane Fuel Cells	3D22
	9-16.	Repair Limitations of Fuel Cells	3D22
	9-17.	Repair Patch (Heat Cure Method)	3D24
	9-18.	Repair Patch (Air Cure Method)	3E1
	9-19.	Metal Fitting Sealing Surfaces.	3E1
	9-20.	Accessory Replacement	3E1
	9-21.	Defect Repairs of Fuel Cell	3E2
	9-22.	Testing Fuel Cells	3E2
9-23.	Fuel Valves		3E3
	9-24.	Removal of Fuel Valves	3E3
	9-25.	Disassembly of Crossfeed Valve and Fuel Shutoff Valves	3E3
	9-26.	Cleaning, Inspection and Repair of Fuel Valve Shutoff and Crossfeed Valves	3E3
	9-27.	Assembly of Fuel Shutoff and Crossfeed Valves	3E4
	9-28.	Leak Test of Fuel Shutoff and Crossfeed Valves	3E4
	9-29.	Installation of Fuel Valves	3E4
	9-30.	Adjustment of Fuel Shutoff and Crossfeed Valve	3E5

Paragraph		Aerofiche Grid No.
9-31.	Fuel Filter	3E5
9-32.	Removal of Fuel Filter	3E5
9-33.	Disassembly of Fuel Filter	3E5
9-34.	Cleaning, Inspection and Repair of Fuel Filter	3E5
9-35.	Assembly of Fuel Filter.	3E5
9-36.	Installation of Fuel Filter	3E7
9-37.	Removal and Installation of Heater Fuel Filter	3E7
9-38.	Removal and Installation of Submerged Fuel Pumps	3E7
9-39.	Repair of Leaking Nacelle Fuel Tank	3E9
9-40.	Nacelle and Tip Tank Access Plate Resealing	3E10
9-41.	Fuel Gauging System	3E13
9-42.	Description and Principle of Operation	3E13
9-43.	Removal and Installation of Sensor Units	3E13
9-44.	Repairs	3E13
9-45.	Fuel Quantity Indicator	3E13
9-46.	Tank Sensor Units (All)	3E14
9-47.	Cleaning of Tank Units	3E14
9-48.	Testing	3E14
9-49.	Tank Sensor Units	3E16
9-50.	Fuel Quantity Indicator	3E16
9-51.	Checks and Adjustments of Fuel Quantity Gauge	3E21
9-52.	Fuel Vent System	3F1

SECTION IX

FUEL SYSTEM

9-1. INTRODUCTION. This section contains instructions for repairing difficulties which may arise in the operation of the fuel system and its related parts. The instructions are organized so the mechanic can refer to: Description and Principle of Operation, for a basic understanding of the system; Corrective Maintenance, for the removal, repair and installation of the various components; and a Troubleshooting Chart to facilitate the location and repair of the different components of the fuel system.

9-2. DESCRIPTION OF PRINCIPLE OF OPERATION. Both the left and right fuel systems are independent of each other and are connected only by a crossfeed system. Fuel is supplied to the engine by one of two submerged fuel pumps located in the inboard main tank. One of these boost pumps must be operating any time the engine is in operation so the fuel under pressure is supplied to the engine driven fuel pump. Vents for the system are NACA anti-icing, non-siphoning type which incorporate flame arrestors.

The fuel system should be serviced by first filling through the nacelle tank. When this tank is full, the complete system with exception of the tip tank (if installed) will be full. Final filling must be done through the tip tank (if installed).

Only one fuel shutoff valve per wing is used. This valve is operated by a push-pull control on the fuel control panel in the cockpit. The valve is used as an ON-OFF valve for the fuel system. The only other valve in the system is the crossfeed which is also mechanically operated from the fuel control panel. This valve should always remain OFF except under single engine operation, when crossfeed to the operating engine is desired.

Fuel tank drains are provided at the low point of each tank, and a main fuel filter is located forward of each engine fire wall. The filter is provided with a drain which is accessible through a door in the engine cowling.

The aircraft is equipped with capacitance probe fuel quantity indicating system with four probes located in each wing. All fuel cells in each wing are interconnected.

9-3. TROUBLESHOOTING. Troubles peculiar to the fuel system are listed in Table IX-V at the back of this section along with their probable causes and suggested remedies. When troubleshooting, check from the fuel supply to the items affected. If no trouble is found by this method, the trouble exists inside individual pieces of equipment. They should be removed from the aircraft and overhauled or replaced with identical units tested and known to be good. Troubleshooting the fuel quantity indicator may be found in Section X, Instruments. The electrical system diagram for the system may be found in Section XV, Electrical System.

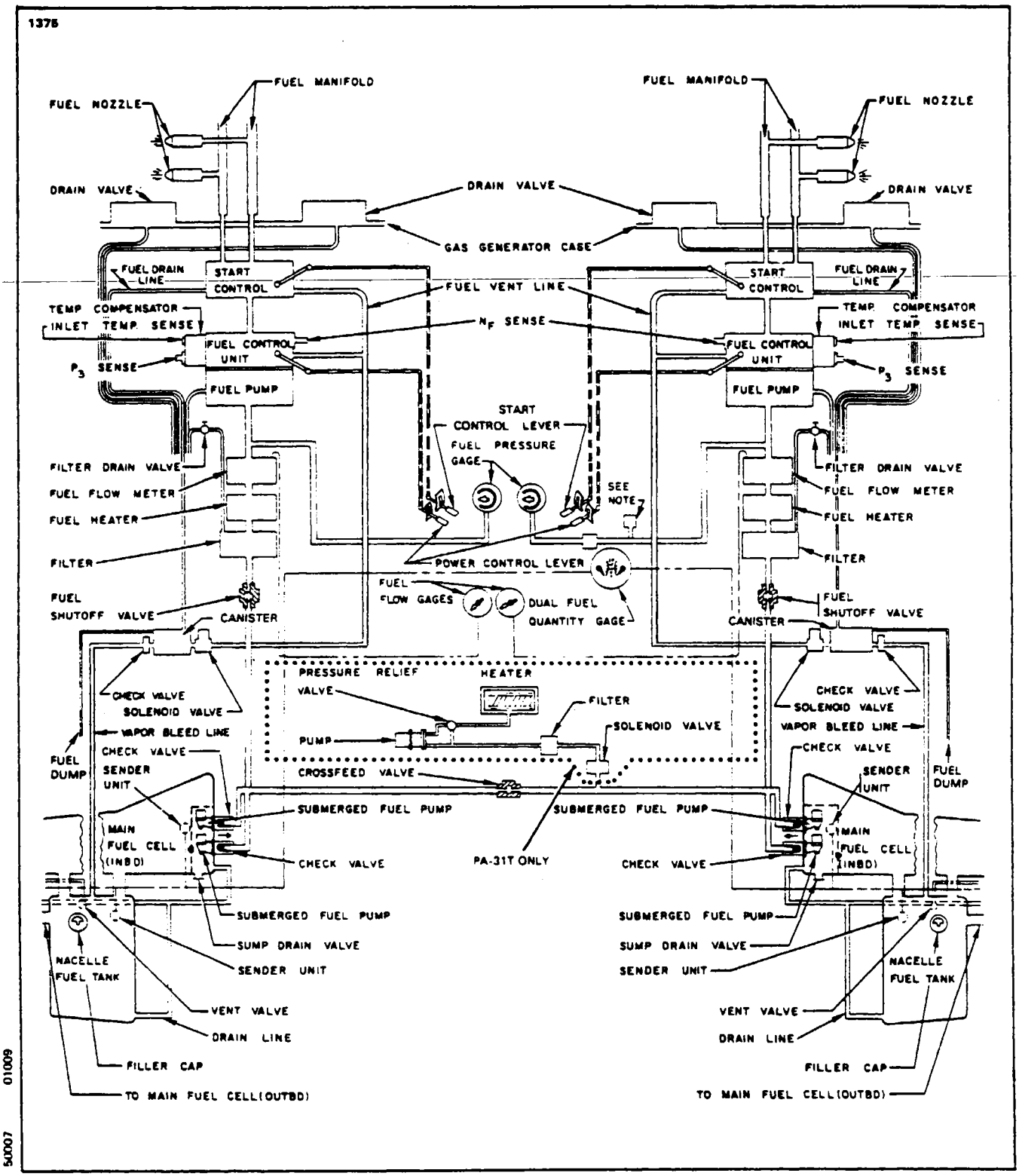

Figure 9-1. Fuel System Schematic (PA-31T and PA-31T2)

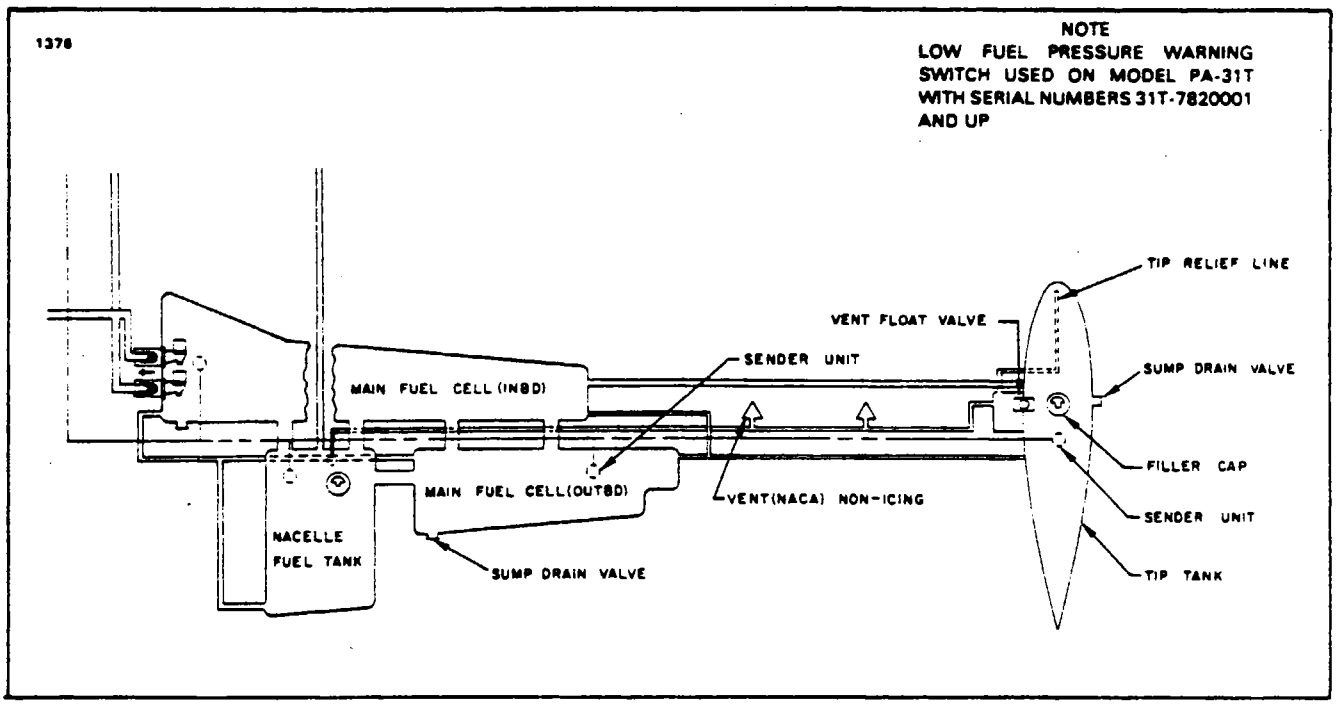

Figure 9-1. Fuel System Schematic (PA-31T and PA-31T2) (cont)

THIS SPACE INTENTIONALLY LEFT BLANK

2590

1 DRAIN VALVE
2 FUEL MANIFOLD
3 FUEL NOZZLE
4 GAS GENERATOR CASE
5. START CONTROL LEVER
6 FLOW DIVIDER AND DUMP VALVE
7 FUEL DUMP
8. POWER CONTROL LEVER
9 NF SENSE
10. FUEL CONTROL AND SHUTOFF VALVE
11 INLET TEMPERATURE SENSE
12. P3 SENSE
13 TEMPERATURE COMPENSATOR
14 DUAL FUEL QUANTITY GAUGE
15 FUEL PRESSURE GAUGE
16 LOW FUEL PRESSURE WARNING SWITCH
17 FUEL PRESSURE SENDER UNIT
18 FUEL PUMP
19 HEATER
20 FUEL FLOW GAUGE
21 FUEL VENT LINE
22 FUEL FLOW METER
23 FILTER DRAIN VALVE
24 FUEL HEATER
25 FILTER
26 PUMP
27 PRESSURE RELIEF VALVE
28 FILTER
29 CROSSFEED VALVE
30 SOLENOID VALVE
31 FIREWALL SHUTOFF VALVE
32 SOLENOID VALVE
33 CANISTER
34 CHECK VALVE
35 CHECK VALVE
36 SUBMERGED FUEL PUMP
37 FUEL QUANTITY SENDER UNIT
38 VAPOR BLEED LINE
39 MAIN FUEL CELL (INBD)
40 VENT (NACA) NON-ICING
41 VENT FLOAT VALVE
42 FUEL DUMP
43 SUMP DRAIN VALVE
44 DRAIN LINE
45 FUEL QUANTITY SENDER UNIT
46 NACELLE FUEL TANK
47 VENT VALVE
48 FILLER CAP

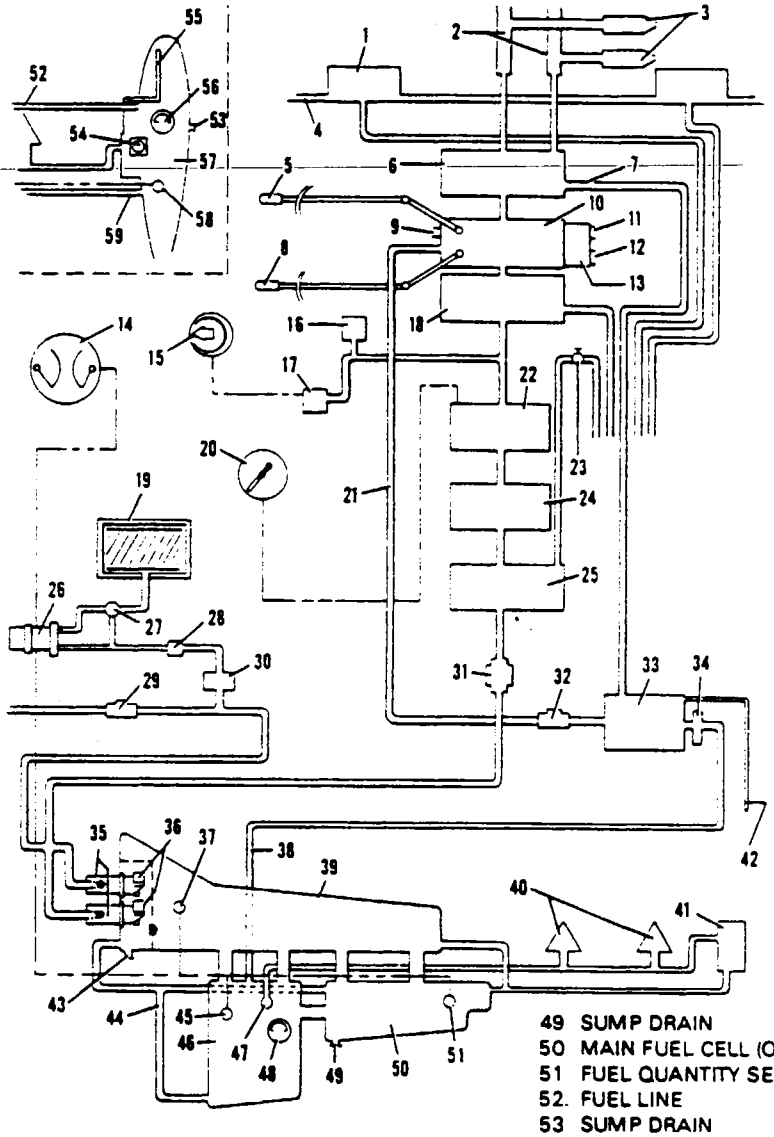

49 SUMP DRAIN
50 MAIN FUEL CELL (OUTBD)
51 FUEL QUANTITY SENDER UNIT
52. FUEL LINE
53 SUMP DRAIN
54 VENT FLOAT VALVE
55 TIP RELIEF LINE
56 FILLER CAP
57 TIP TANK
58 FUEL QUANTITY SENDER UNIT
59 TIP TANK VENT LINE

49846

Figure 9-2. Fuel System Schematic (PA-31T1 only)

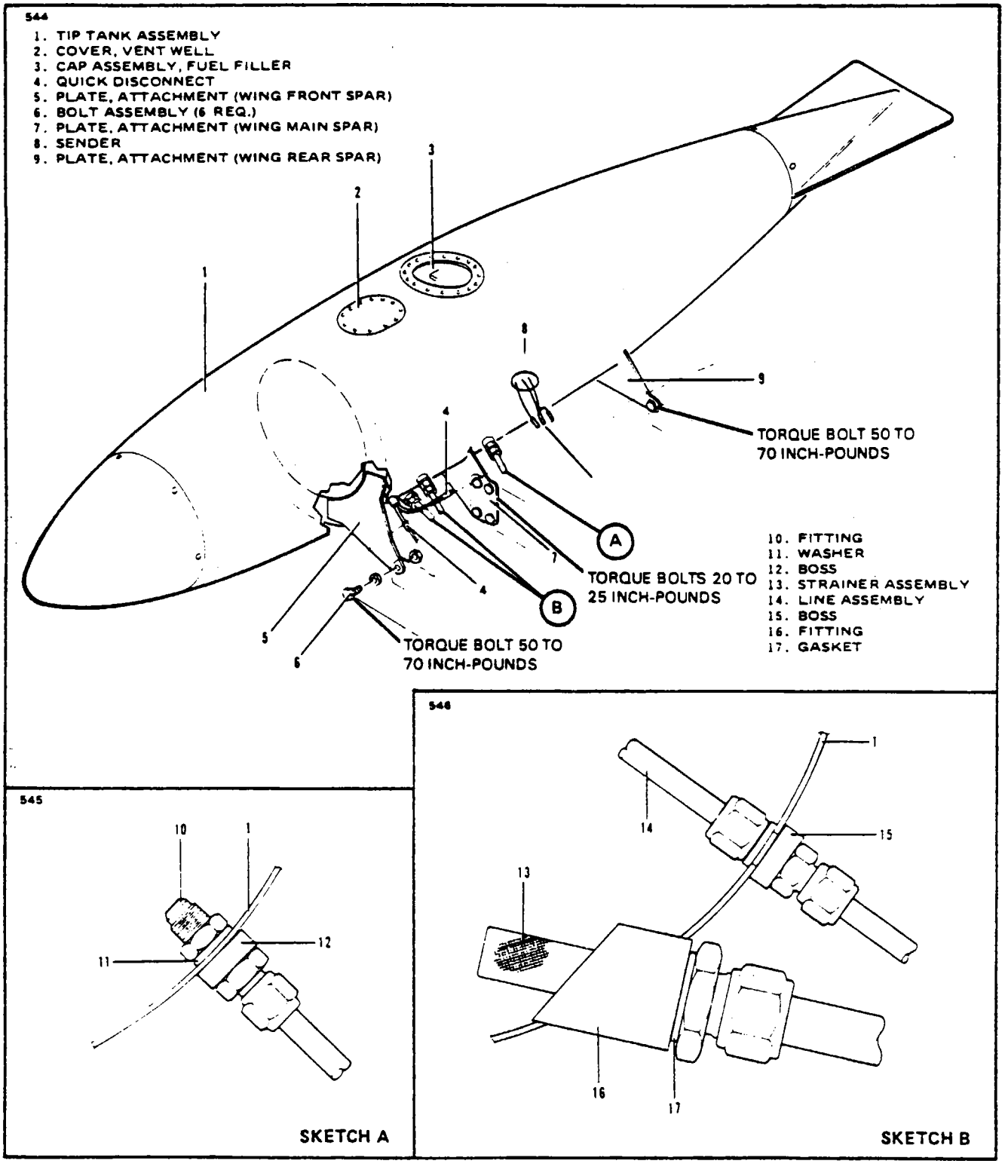

Figure 9-3. Tip Tank Installation

9-4. FUEL CELLS AND TANKS.

NOTE

The nacelle tank is not removable; it is a wet type tank coated with an anti-corrosive primer.

9-5. REMOVAL OF WING TIP TANKS. (Refer to Figure 9-3.)

a. Drain the tank.
b. Remove the fairing between wing tip and tip tank.
c. Remove the sender unit.
d. Disconnect the electrical wires to the navigation lights and strobes.
e. Disconnect all plumbing from the tip tank and cover the ends to prevent contamination of fuel.
f. Support the tank and remove the six bolts holding the tank to the wing, thus removing the tank.

9-6. INSTALLATION OF WING TIP TANKS. (Refer to Figure 9-3.)

a. Connect the tank to the wing by installing the six bolts. Refer to Figure 9-3 for bolt torque values.
b. Connect all the plumbing to the tank.
c. Install the sender unit and connect electrical leads to navigation lights and strobes.
d. Install the fairing between the wing tip and tip tank.

9-7. REMOVAL OF WING FUEL CELLS. (Refer to Figures 9-4 and 9-5.)

a. Drain either entire system or make sure crossfeed valve is closed and either wing may be drained separately without fuel from the opposite side draining also. (Refer to Draining Fuel System. Section II.)

b. Remove the access panel aft of the one containing the filler cap on the nacelle top.

c. Remove the fuel cell and fuel sender access plates from the top of the wing.

d. Remove the lower wing root fairing and fuel cell drain fitting plates from the underside of the wing.

e. By reaching through the nacelle opening, remove the bolts from the three flange connections on the nacelle floor that connect the main inboard and outboard fuel cells to the nacelle tank.

f. Disconnect the wires from the fuel cell sender units; remove the screws that secure the sender and carefully draw the sender, with gasket from the cell. Note the position of the installed sender unit and gaskets to facilitate reinstallation.

g. By reaching into each fuel cell, remove the clamps from the two nipples in each tank that connect the two crossover tubes between the two fuel cells and pull each tube out of the cells. The tubes may be removed from the wing by disconnecting the ground strap from the spar.

h. Loosen the clamps and disconnect the fuel lines that attach to the outboard ends of both cells and also the one line that attaches to the inboard end of the main outboard fuel cell.

i. On the underside of the wing, draw the two fuel cell drains down enough to release the clamps and remove the drain.

j. Disconnect the electrical connections and fuel lines to the submerged fuel pumps; remove the check valves, and disconnect the fuel line that connects to the cell just aft of the pump by loosening the clamp.

NOTE

Use a wrench to backup the electrical connection on the submerged fuel pumps to prevent the nylon fitting from turning, which could cause the internal wire connection to break and render the pump inoperative.

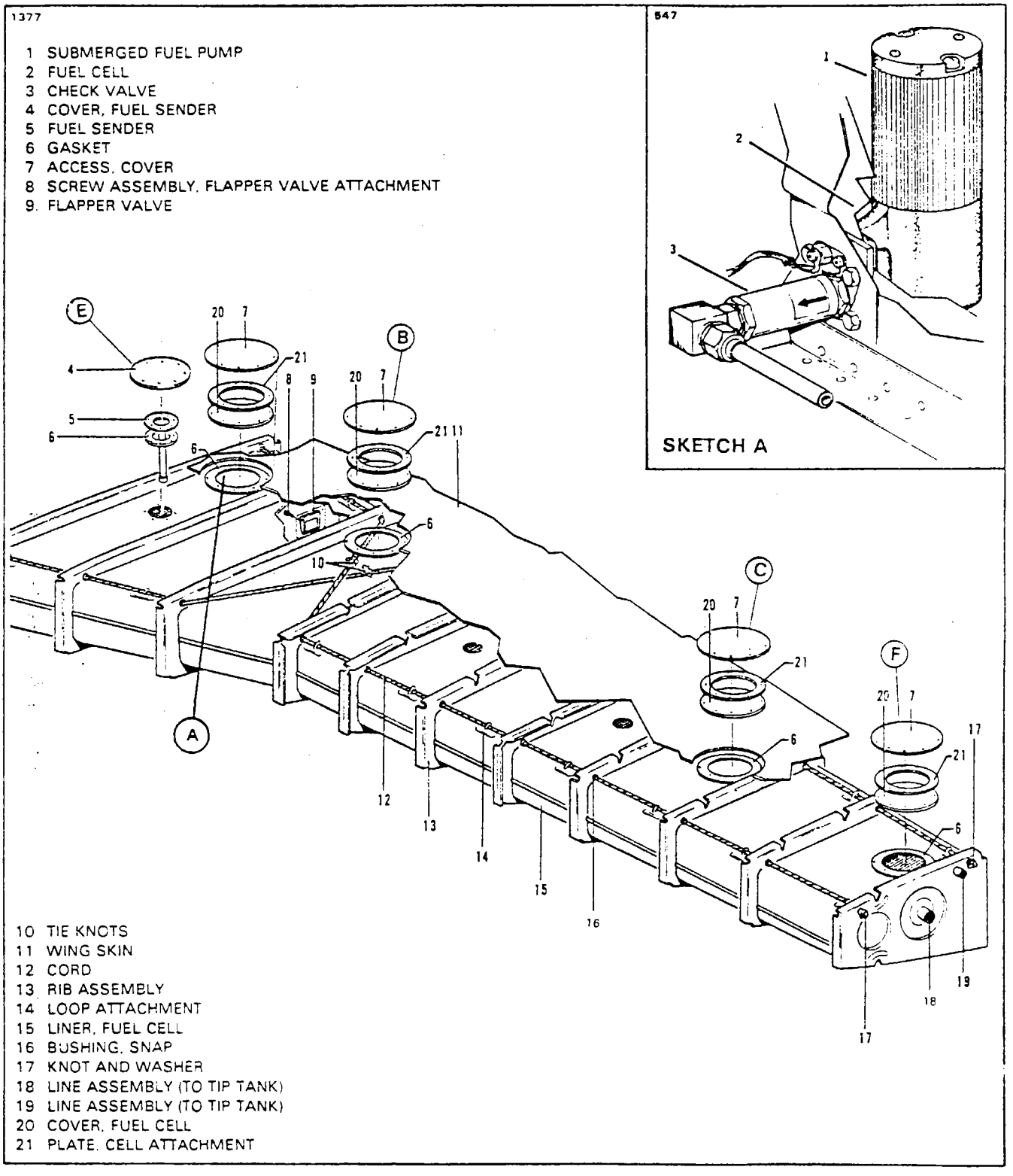

Figure 9-4. Fuel Cell Installation Inboard

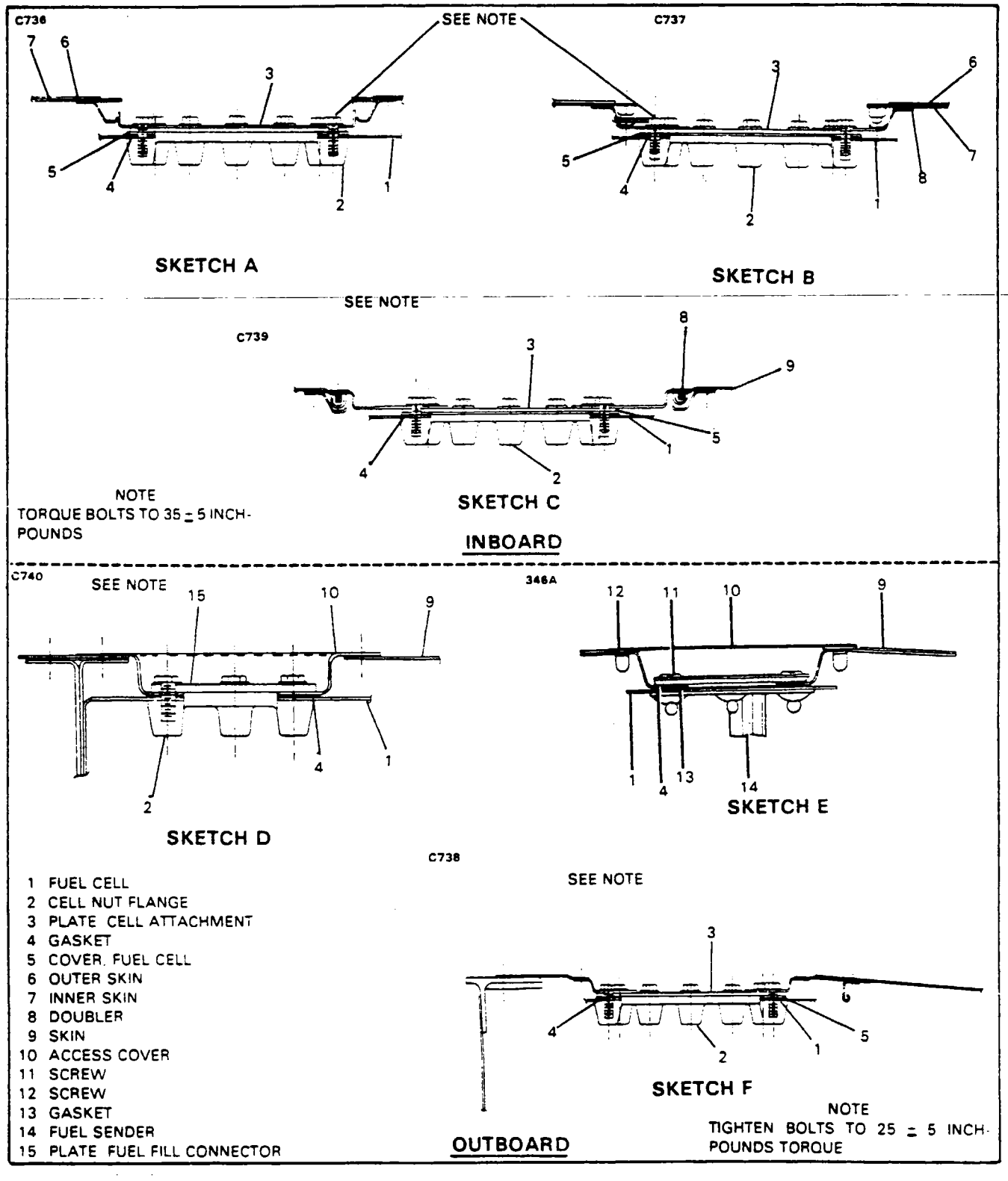

Figure 9-4a. Fuel Cell Attaching Hardware

k. Loosen the eight mounting bolts that attach the two submerged fuel pumps to the wing rib; reach through the access hole just above the pumps and remove them.

l. Reach through the proper access holes for each fuel cell and untie the nylon cords that secure the cell.

m. Remove all the cap bolts at all the access holes that attach the cells to the skin brackets. Push the cell down and work the nylon cord back through the cell hangers and rib bushings to the ends of the cell compartment.

n. Remove the screws that attach the adapter brackets to the wing skin in each of the elongated access holes and remove the brackets from the holes.

o. Place tape or another protective material around the cell access opening to prevent damage to the cell when removing.

p. Fold the cell neatly within the wing and tape or tie it, whichever suits, and remove it gently through the elongated opening on top the wing.

NOTE

Be careful not to damage the small flapper valve installed in the interior baffle close to the fuel pump mounting locations.

9-8. CLEANING, INSPECTION AND REPAIR OF FUEL CELLS.

a. Fuel cells may be cleaned by the following procedure:

1. New Cells: It should not be necessary to clean new cells upon removing them from their containers, if they are installed in the airframe cavities promptly. If for any reason the cells are not installed immediately, and become dirty, they should be cleaned with soap and warm water to remove foreign material prior to installation in a clean cavity.

2. Used Cells: Prior to removal, the cells are to be drained of fuel, purged with fresh air and swabbed out to remove all traces of fuel. Following removal, the cells are to be cleaned inside and out with soap and warm water.

WARNING

Use a vapor-proof light for inspection.

b. Fuel cells may be inspected by the following procedure:

1. New Cells: Inspect the cell surface inside and outside for cuts, abraded (scuffed) areas and accessory damage. Also, inspect the fitting seals for nicks, scratches and foreign material.

2. Used Cells: Cells removed from the airframe cavity for inspection and repair, or cells being returned to service, should be inspected for cuts, abraded (scuffed) areas and accessory damage on the inside and outside of the cell surface. Reach through the fuel cell access plate and take a section of cell between the thumb and forefinger. Wipe the ridge created by this action with a cloth wet with Methylethylketone. If fine cracks are evident, the fuel cell is not repairable and must be replaced.

3 Baffled Fuel Cells: Inspect every 2 years or after 500 hours in service which ever comes first, conduct the following inspection:

(a) Defuel both main cells. (Refer to Section II.)

(b) Remove the access plates located inboard of the nacelle. Remove both wing and fuel cell access plates.

(c) Inspect fuel cell fittings for deterioration of the rubber used, using the fingernail to attempt to scrape the rubber off the metal or nipple fitting. If the rubber has not deteriorated the fingernail will glide across the rubber. If a degraded condition exists the fingernail will dig into the rubber. Usually the deteriorated rubber will have changed from a light yellowish tan to a dark reddish brown color.

(d) Check the tension and knots of the two nylon support cords.
(e) Inspect the interior of the cell for security of baffle and the free operation of the flapper valve. Inspect both sides of the baffle.
(f) Inspect the exterior of the cells to insure the Velcro tape has not parted from the cell surface or liner surfaces.
(g) Install all access plates on fuel cells and wings. Fill cells and check for leaks.

c. Due to the length of the fuel cell repair procedures, the information will be found in Paragraph 9-16.

4. Fuel Cell Filler Cap: Inspect large o-ring with a 10x magnifying glass for cuts or cracks. Replace o-ring if any damage is found. If o-ring is sound, adjust cap per steps a thru d.
(a) Unlock and remove cap from adapter plate.
(b) Tighten ¼-28 self locking nut at base of cap ½ turn (If castle nut is used in lieu of self locking nut remove chain assembly, adjust nut ½ turn and replace chain assembly).
(c) Lock cap into adapter plate in top of fuel cell.
(d) If cap continues to leak replace cap and return defective cap to manufacturer for repair.

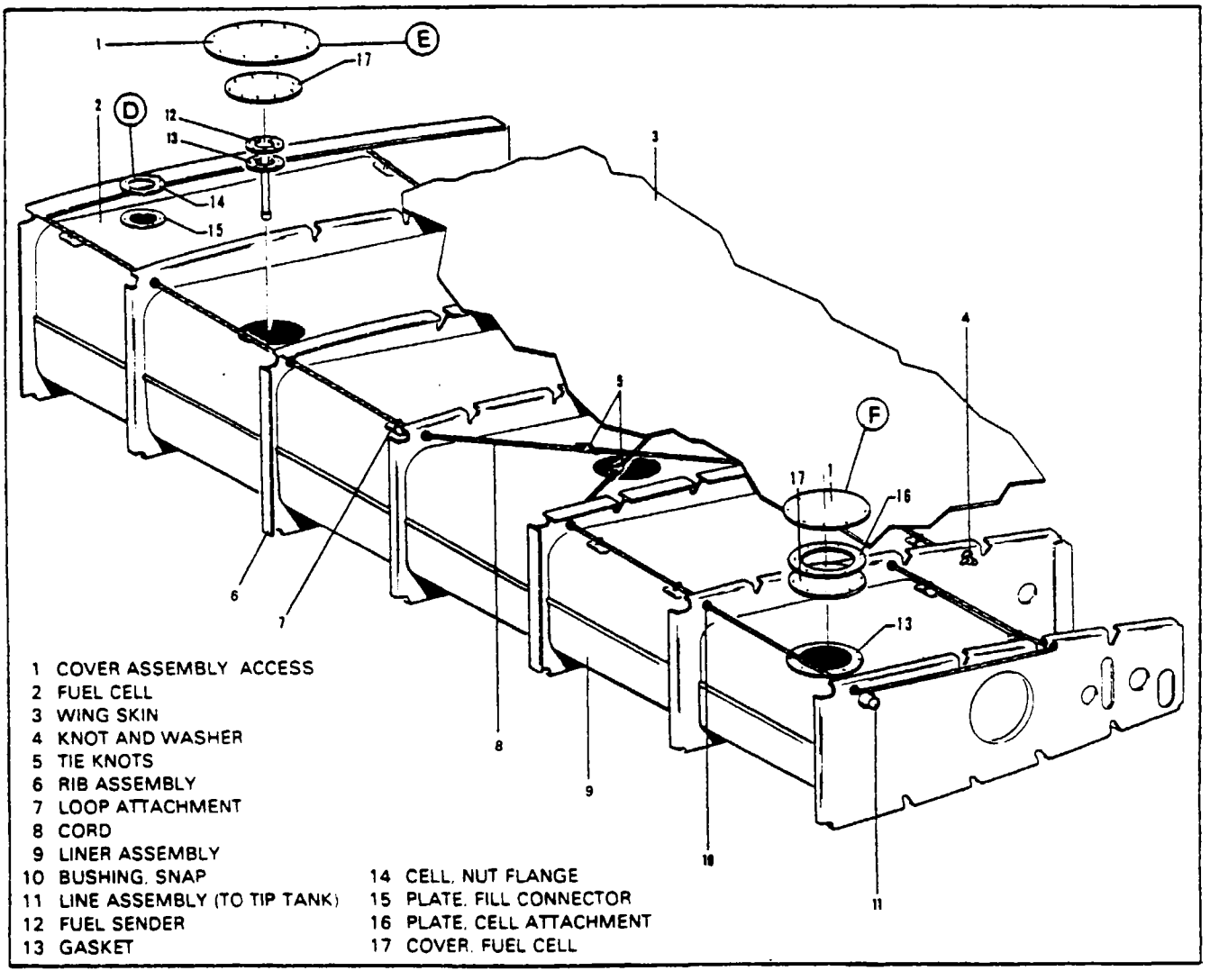

Figure 9-5. Fuel Cell Installation Outboard

9-9. FUEL CELL COMPARTMENT.

a. Thoroughly clear the cell compartment of all foreign material such as trimmings, loose washers, bolts or nuts.

b. Round off any sharp edges in the fuel cell compartment.

c. Inspect the fuel cell compartment just prior to fuel cell installation.

d. Tape over all sharp edges and all rough rivets.

NOTE

If replacement fuel cell does not include alternate fuel sender location opening at station 137.50, it will be necessary to tape over the bottom of fuel sender support bracket. Use a pressure sensitive adhesive waterproof type tape.

9-10. MOLDED NIPPLE FITTINGS. In order to get the best service from this type fitting, it is necessary to exercise certain precautions at the time of installation. The specific precautions other than the general care in handling are as follows:

a. Insert each fuel line into each nipple until the end is flush with the inside edge of the cell.

b. The hose clamp must be clear of the end of the fitting by .25 inch where possible.

c. Locate the hose clamp on the fabric-reinforced area of the nipple.

d. Torque the hose clamps 15 to 20 inch-pounds. Do this once. Do not retighten unless the hose clamp is loosened completely and allow to set for 15 minutes before retightening.

e. Do not use sealing paste or gasket compound.

f. Apply a thin film of Simonize Wax to metal tubes to facilitate installation and removal.

9-11. INSTALLATION OF INBOARD AND OUTBOARD FUEL CELL. (Refer to Figures 9-4 and 9-5.)

a. Inspect the cell compartment (See Paragraph 9-9.)

b. Should the cell be in its shipping container, do not remove it until ready for installation.

c. Check to be sure the cell is warm enough to flex. Do not use sharp tools such as screwdrivers, files, etc., for installation purposes.

d. Place tape or another protective material over the edges of the elongated access opening to prevent damage to the cell.

e. Roll the cell into the shape and size which can be inserted through the access opening of the cell.

f. After fitting the cell into the wing, unroll the cell and establish correct relationship of the cell to the compartment.

g. From each end of the cell compartment, feed the cord through the cell hangers and rib bushings until the cords can be joined at the access openings. Do not tie cord yet. The cords are routed as shown in Figures 9-4 and 9-5.

NOTE

The nylon cord used to hold the fuel cells is .125 diameter, with a minimum breaking strength of 550 pounds and conforming to MIL-T-5040C Type III specifications. Obtain through Goodyear.

h. Connect the fuel drain plate by inserting the threaded end of a bolt or rod (not under three inches long) up through the plate and nipple fitting of the fuel cell. (Refer to Figure 9-6.) Reach through the fuel cell opening and install a 2 or 2-1/2 inch diameter washer on the bolt or rod and secure with a nut. Pull the nipple down through the opening in the wing panel enough to clamp the nipple fitting to the plate.

i. Remove the bolt or rod; secure the plate to the wing panel and install the drain valve.

j. Install the submerged fuel pumps, through the access opening in the wing top, and secure to the inboard rib with the four bolts that attach each of the pumps.

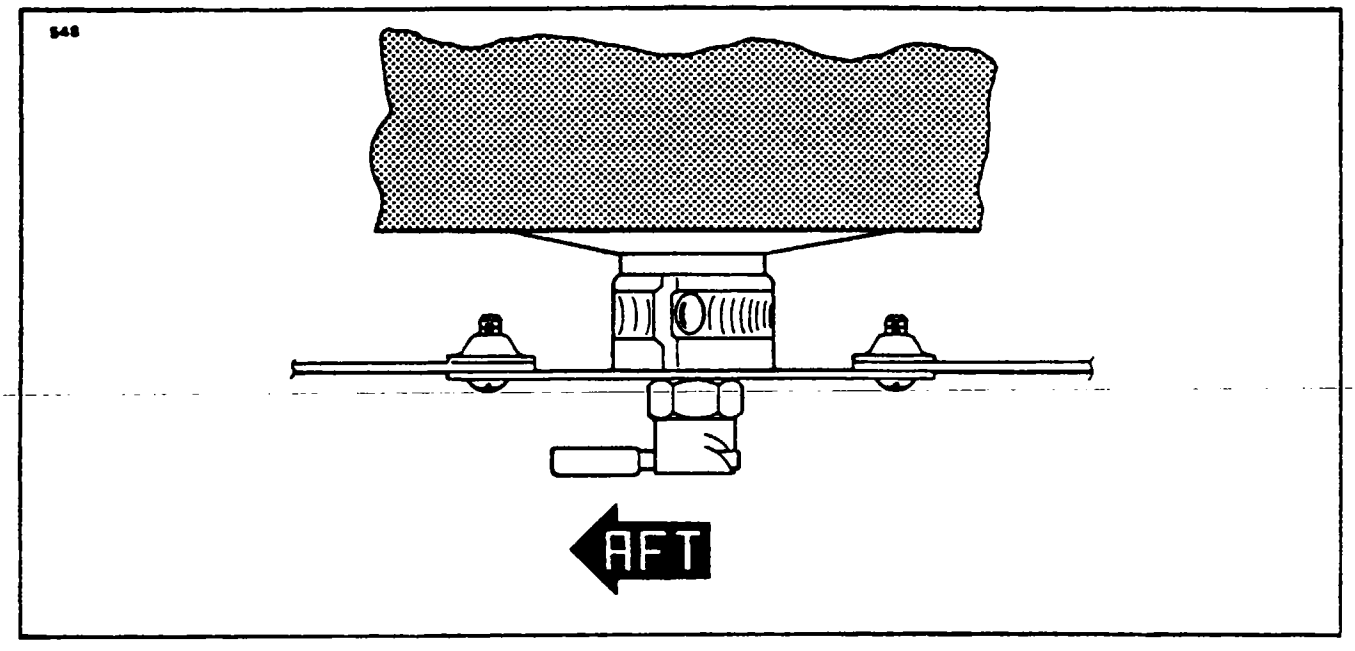

Figure 9-6. Fuel Valve Drain Plate

k. Connect the electrical wires to the submerged fuel pumps and install the check valves into the fuel pumps and connect the fuel lines to the check valves.

l. Install the fuel cell flange mounting brackets in the elongated access holes with screws.

m. Wipe the inside of the cell clean of all dirt and foreign material with a clean, soft, lint-free tack cloth, and inspect for cleanliness.

n. Attach the fuel cell nut flange fittings to the brackets on the nacelle tank floor by reaching through a nearby access hole and holding the cell and gasket up against the attachment bracket and inserting several bolts, or by inserting a threaded rod or bolt through a hole in the bracket down into the corresponding hole in the cell nut flange fitting and pull the cell up against the bracket in the nacelle floor and install several cap bolts to hold the fuel cell until the rod is removed; then install all cap bolts and torque to 35 $\pm$ 5 inch-pounds.

o. Connect the fuel lines that attach to the outboard ends of the fuel cells, and the drain line that runs from the inboard end of the main outboard fuel cell to the inboard end of the main inboard cell. (Refer to Paragraph 9-10.)

p. Connect the two crossover tubes between the main inboard and outboard fuel cells by inserting the tubes into the nipples in each cell and install clamps from inside the cell. Torque the clamps 25 to 30 inch-pounds. (Refer to Paragraph 9-10.) Make sure the ground strap on the crossover tubes is attached to the spar.

q. Install fuel senders, gaskets (one on each side of the bracket) and screws. Tighten nylon screws to 5 +2, -0 inch-pounds.

r. Connect the sender wires and insure that the insulator sleeve insulates to the point where the wires attach to the sender. Install sender access plates.

s. Draw the nylon tie cords tight and hold. Ascertain the cell is in correct position in the cell compartment. Again draw the cord tight, hold with clamp or pliers and tie. A recommended tie is shown in Figure 9-13.

t. Install the remaining cell cover access plates on top of the wing. Torque the cell cover cap bolts to 35 $\pm$ 5 inch-pounds.

u. Put enough fuel in cell to check for fitting leaks.

v. Install remaining access plates, lower wing root fairing and nacelle top panel.

9-12. HANDLING AND STORAGE OF FUEL CELLS.

a. Prevent needless damage by exercising common sense in all handling of the cells. Folding or collapsing of cells is necessary to place them in containers for storage, to install them in airframe cavities and to carry them from place to place. Protect the fitting seal surface from contact with cavities during removal or installation. Use protective covers over fitting seal when practical. Protect the cell from tools, hot lights, etc., when working around them. Avoid stepping on folds or creases in cells. Do not carry cells by fittings. Maintain original cell contours or folds when refolding for boxing, rolling to insert in airframe cavities, or handling in the repair area. The cells to be repaired should be placed on a well-lighted table. Maintain natural contours, if possible, while repairing. Prevent contact with sharp edges, corners, dirty floors or other surfaces. Repair area must be well-ventilated. Do not stack cells. Inspect cavities and insure cleanliness prior to installing any cell.

WARNING

Do not permit smoking or open flame near repair area of cells.

b. When storing cells, observe the following rules:

1. Fold cells smoothly and as lightly as possible with a minimum number of folds. Place protective wadding between folds.
2. Wrap the cell in moisture-proof paper and place it in a suitable container. Do not crowd the cell in the container; use wadding to prevent movement.
3. Stack boxed cells to allow access to oldest cells first. Do not allow stacks to crush bottom boxes. Leave cells in boxes until used.
4. Storage area must be dry, 70° F, and free of exposure to sunlight, dirt and damage
5. Used cells must be cleaned with soap and warm water prior to storage. Dry and box as outlined above.

9-13. REPAIR OF FUEL CELLS. The following is the repair procedure recommended for field repair of fuel cells constructed of Goodyear BTC-54A material. There are two methods by which these repairs may be accomplished. One method is by heat cure; the other is air cure. The end result of either repair is a neat, permanent repair. The heat repair allows the cell to be cured and ready for reinstallation in two hours; while the air cure method requires that the cell not be moved for 72 hours during the air cure period.

NOTE

Air cure repairs are to be made at a room temperature of approximately 75° F. For each 10° drop in temperature, add 25 percent cure time, for instance, if the room temperature reads 64°, air cure for 90 hours instead of 72 hours.

9-14. HANDLING OF REPAIR MATERIALS.

a. All materials are to be protected from dirt contamination, sunlight, and excessive heat or cold while in storage. Containers are to be tightly capped and stored between +30° F to 85° F temperature.

b. The repair code 80C27 referred to in this text is prepared immediately prior to use by mixing repair cement 80C27 (pint can with 320gm) with cross-linker 80C28 (2 oz. bottle with 81cc).

CAUTION

80C27 repair cement requires thorough mixing to obtain full adhesive values.

c. Repair cement has a pot life of 20 minutes after mixing. The unmixed 80C27 and 80C28 have a shelf life of six months from the date of packaging.

CAUTION

All containers for cements and solvents should be properly identified.

9-15. REPAIR PROCEDURES OF GOODYEAR VITHANE FUEL CELLS.

NOTE

The repair of Goodyear Vithane fuel cells is restricted to authorized personnel. Authorized personnel are those who have been certified and trained by Goodyear representatives, or those who have received their training from persons who have been certified and trained by Goodyear representatives.

9-16. REPAIR LIMITATIONS OF FUEL CELLS. Repair limitations are as follows:

a. FT-192 repair fabric is for repair of simple contours only. Patches referred to in this text are of this material.

b. Inside patches are to lap defect edges a minimum of 1.0 inches in each direction.

c. Outside patches are to lap defect edges .25 to .50 inches inside patches.

d. Outside patches are to be applied and cured prior to applying an inside patch.

e. Blisters between inner liner and fabric larger than .25 of an inch in diameter require an outside and an inside patch.

f. Separations between layers or plies larger than .50 inch in diameter require an outside and inside patch. Holes and punctures require an outside and inside patch.

g. Slits or tears up to 6.0 inches maximum length require an outside and inside patch.

h. External abraded or scuffed areas without fabric damage require an outside patch only.

i. A loose edge may be trimmed provided a .50 inch minimum lap or seam is maintained.

j. Air cure repair patches are to remain clamped and undisturbed for 72 hours at a room temperature of approximately 75°F.

CAUTION

For each 10° drop in temperature from 75°F, add 20 hours cure time. For example: at 65°F, cure for 92 hours.

k. All heat cured patches are ready for use when cool.

l. Fitting repairs are confined to loose flange edges, seal surface rework and coat stock.

m. The maximum number of heat cure repairs in the same area is four.

NOTE

Any damage not covered by the above should be returned to: The Goodyear Tire & Rubber Company, Rockmart Georgia 30153, for repair.

CHART 9-1

FUEL CELL REPAIR EQUIPMENT LISTS

Repair Kit, Goodyear Part No. 2F1-3-37813

GROUP I MATERIALS

80C27 Repair Cement	8	Pint cans 320 gms in each
80C28 Cross-Linker	8	14 oz bottles 81 cc in each
Methylethylketone	2	1 pint cans
FT-192 Repair Fabric	2	Sheet 12" x 12"
AP368 Manual	1	

GROUP II MATERIALS

The following equipment is necessary to perform the repair.

Group II equipment will be furnished at additional cost, if ordered by customer.

Foam Rubber Cloth Back Sheet, 1/4" x 12" x 12"	2
Paint Brush, 1 inch wide	2
Aluminum Plates, 1/4" x 6" x 6"	4
Measuring Cup (250 ml)	1
Cellophane (Sheet 12" x 24")	2

NOTES

*Accessories - order per individual cell requirements.

Phenol plates, phenol plate assemblies and phenol test equipment can be ordered as required from cell manufacturer.

Alodine 1200 to be ordered as required from cell manufacturer.

Cure Iron (Set 240°F) Optional.

9-17. REPAIR PATCH (HEAT CURE METHOD).

a. Prepare the exterior cell wall and exterior patch first. Cut a repair patch from FT-192 material to the size required to insure a proper lap over the injury in all directions. (See Limitations.) (Hold shears at an angle to produce a beveled edge (feather) on the patch.) Round corners of patch. (Dull side or gum contact face of repair patch should be the largest surface after beveling.)

b. Wash one square foot of cell wall surrounding the injury, and the repair patch contact side with a clean cloth soaked with Methylethylketone solvent.

c. Abrade cell wall surface about the injury and on the contact side of patch with fine emery cloth to remove the shine.

d. Repeat Methylethylketone washings two more times, for a total of three washings for each surface.

e. Tape a 8" x 8" piece of cellophane inside the cell over the injury.

f. When all the above preparatory work has been done and the cell has been positioned for patch application on the repair table, mix the 80C27 cement (320 gms) with the cross-linker 80C28 (81cc), and stir mixture thoroughly, for five minutes.

NOTE

Cement must be at a minimum of 70°F before mixing. Keep away from water and excessive heat.

g. Brush one even coat of mixed repair cement on the cell wall around the injury and on the contact side of the repair patch. Allow to dry for fifteen minutes.

h. Repeat a second mixing of repair cement and brush a second coat.

CAUTION

Do not use the first can of mixed cement for this coat.

i. Allow cement to dry approximately five minutes, and then center patch over injury Lay the repair patch by rolling it down on surface from center to edge without trapping air. Hold the unrolled portion of the repair patch off the cemented surface until roller contact insures an air-free union. At this time, the repair patch may be moved by hand on the wet surface to improve lap. Do not lift the repair patch, slide it.

CAUTION

Make sure the cellophane inside cell over the injury remains in place, as any cement will stick cell walls together without it as a separator.

j. Cover one smooth surface each of two aluminum plates (plates must be larger than patch), with fabric-backed airfoam, fabric side out. Tape airfoam in place. Foam must cover edges of the plate for protection. Use a cellophane separator to prevent the cement from sticking in the wrong place.

k. Fold the cell adjacent to the patch and place prepared plates one over repair patch and one on opposite side.

l. Center a repair iron 2F1-3-25721-1 on the plate over the repair patch. Secure the assembly with a "C" clamp. Tighten by hand. Check cement flow to determine pressure.

CAUTION

Make sure that the cell fold is not clamped between plates. This would cause a hard permanent crease. Also make sure that the patch does not move when clamp is tightened.

m. Connect the repair iron into 110-volt current and cure the repair for two hours. After two hours cure, unplug repair iron and allow it to cool to touch. Then remove the "C" clamp. Wet the cellophane to remove it from the repair.

n. The inside patch is applied the same as the above procedure except for size of the repair patch (see Limitations), after the outside patch has been cured.

CAUTION

Success of applying both an outside and inside repair patch simultaneously is doubtful and not recommended.

9-18. REPAIR PATCH (AIR CURE METHOD). Follow the procedure for the heat cure method, except omit repair iron, and cure each patch per air limitations (minimum 72 hours), undisturbed at 75° F.

9-19. METAL FITTING - SEALING SURFACES.

a. Rub off roughness of the affected area with a fine file or fine emery cloth. Treat the reworked area.

b. Clean metal surface using a clean cloth dipped in Methylethylketone. Moisten the cleaned surface with clean cloth dipped in water. Apply alodine 1200 solution, undiluted, to the affected area with a small nylon brush. Allow the solution to dry until a light golden color appears. When a coating has been formed, remove the excess solution by wiping with a clean water moistened cloth. Allow coating to dry

WARNING

Do not allow solution to come in contact with hands, eyes or clothing.

9-20. ACCESSORY REPLACEMENT.

a. Obtain a cured repair accessory from the cell manufacturer.

b. Mark location of old accessory and preserve markings for guide lines to locate the new part.

c. Remove the old accessory by gradually loosening an edge with a blunt probe-like instrument.

d. When a loose edge is created, grasp the accessory by the loose edge with pliers and gently peel the accessory off the cell wall. Be careful not to pull the cell lap open while peeling accessory off. Pull from the blind side of a cell lap toward the exposed edge.

e. Buff the cell surface under the accessory with emery cloth to smooth roughness and prepare for cement.

NOTE

Removal of the old accessory will probably leave an uneven cavity and surface.

f. Prepare the replacement accessory by buffing and washing the contact surface. Also wash the cell surface (see repair patch).

g. Apply mixed 80C27 repair cement to both surfaces being sure to level the cavity left by the removal of the old accessory.

h. Roll the new accessory into place as with a repair patch and place suitable padded plates in position to insure adequate pressure when clamped. Use a cellophane separator to prevent the cement from sticking in the wrong place.

i. Cure with either cure method.

9-21. DEFECT REPAIRS OF FUEL CELL.

a. Blisters: Remove loose material by trimming. Apply an outside and inside repair patch.

b. Holes, Punctures, Cuts, Tears and Deep Abraded Areas: Trim away any ragged material and apply an outside and inside repair patch.

c. Loose Seams: Buff loose edges and contact surfaces with emery cloth. Wash three times with Methylethylketone. Apply 80C27 mixed cement in two coats as with a repair patch. Clamp and cure. Either method may be used. (See repair patch.) Loose seams may be trimmed if a minimum lap remains.

d. Loose Fitting Flange - Inside: Buff the edge of the flange and the contact surface under the flange. Apply 80C27 mixed repair cement, cellophane, padded plates and clamp. Follow procedure as outlined for repair patch.

e. Looseness Against Metal: Prepare metal as per metal fitting - sealing surfaces. Apply 80C27 mixed cement and cure.

9-22. TESTING FUEL CELLS. Either of the following procedures may be used to detect leaks in the bladder cells:

a. Soap Suds Test:

1. Attach test plates to all fittings.
2. Inflate the cell with air to a pressure of 1/4 psi MAXIMUM.
3. Apply a soap and water solution to all repaired areas suspected of leakage. Bubbles will appear at any point where leakage occurs.
4. After testing, remove all plates and wipe soap residue from the exterior of the cell.

b. Chemical Test:

1. Attach test plates to all fitting openings except one.
2. Make up a Phenolphthalein solution as follows: Add 40 grams Phenolphthalein crystals in 1/2 gallon of Ethyl Alcohol, mix; then add 1/2 gallon of water.
3. Pour ammonia on an absorbent cloth in the ratio of 3 ml per cubic foot of cell capacity. Place a saturated cloth inside the cell and install the remaining test plate.
4. Inflate the cell with air to a pressure of 1/4 psi maximum, cap and maintain pressure for fifteen minutes.
5. Soak a large white cloth in the phenolphthalein solution, wring it out thoroughly, and spread it smoothly on the outer surface of the cell. Press the cloth down to insure detection of minute leaks.
6. Check the cloth for red spots which will indicate a leak. Mark any leaks found and move the cloth to a new location. Repeat this procedure until the entire exterior surface of the cell has been covered. If red spots appear on the cloth, they may be removed by resoaking the cloth in the solution.
7. The solution and test cloth are satisfactory only as long as they remain clean. Indicator solution that is not in immediate use should be stored in a closed rust proof container to prevent evaporation and deterioration.

After the test, remove all plates and test equipment. Allow the cell to air out.

In conducting either test outlined above, the cell need not be confined by a cage or jig, providing the 1/4 psi pressure is not exceeded.

NOTE

The chemical test is the more sensitive and preferred test.

9-23. FUEL VALVES. (Refer to Figures 9-7 and 9-8.)

9-24. REMOVAL OF FUEL VALVES. There are two fuel shutoff valves and one crossfeed valve. The fuel shutoff valves are located in the wing root cavity just aft of the leading edge of each wing. The crossfeed valve is located in the wing root cavity, also, just ahead of the main spar on the left side of the aircraft.

a. To remove either of the fuel shutoff valves, make sure the crossfeed valve is in the OFF position.

b. Drain all the fuel from the wing, which the valve is to be removed.

c. Remove the lower wing root fairing for the particular wing.

d. Locate the shutoff valve and disconnect the fuel lines from each end of the valve and also remove the nut and/or screw that attaches the control cable to the actuator arm.

e. Remove screws from the mounting clamps and remove the valve.

f. To remove the crossfeed valve in the left-hand wing gap cavity, the same basic procedure is followed except that all fuel needs to be drained.

g. Disconnect the fuel line from the aft end of the valve and control cable from the actuator arm on the valve.

h. Disconnect the valve from the mounting bracket and unscrew and remove the valve from the cross fitting.

9-25. DISASSEMBLY OF CROSSFEED VALVE AND FUEL SHUTOFF VALVE. (Refer to Figures 9-7 and 9-8.)

a. Crossfeed Valve:

1. Remove the clamp (2) on top of the valve
2. Remove the snap ring (4) on the bottom of the valve.
3. Push the valve (8) from the valve body.
4. Remove and discard the O-rings (5)

b. Fuel Shutoff Valve:

1. Remove the two clamps (2)
2. Remove the snap ring (4) on the bottom of the valve.
3. Push the valve (8) from the valve body (3).
4. Remove and discard the O-rings (5).

9-26. CLEANING, INSPECTION AND REPAIR OF FUEL SHUTOFF VALVE AND CROSSFEED VALVE.

a. Clean the valve components in a suitable cleaning solvent.

b. Inspect the valve for the following:

1. Check that the valve and valve body stop pins are not bent, broken or missing.
2. Check that the handle is not loose.
3. Check that the valve and inside of the valve body is free of scratches, burrs, etc., that may damage the O-rings

c. Repair to the valve is limited to the reconditioning of parts such as smoothing out minor nicks and scratches and replacing O-rings.

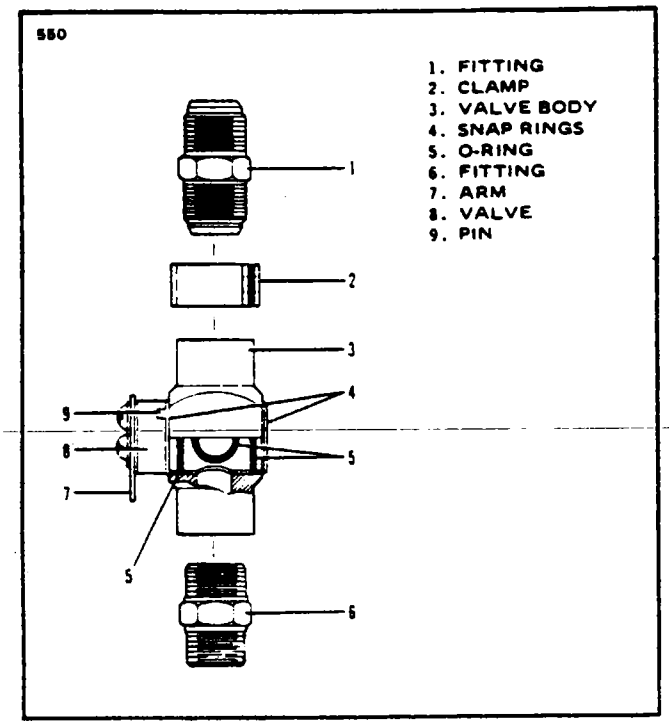

Figure 9-7. Crossfeed Valve

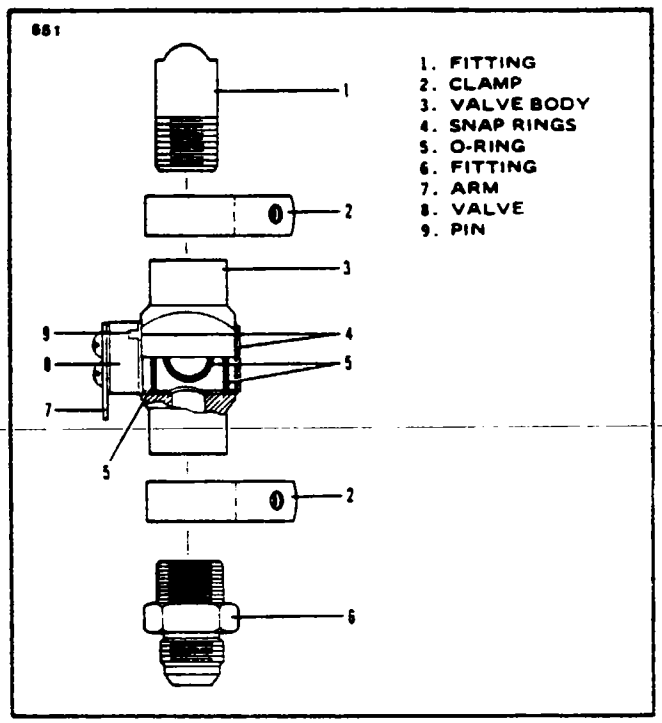

Figure 9-8. Fuel Shutoff Valve

9-27 ASSEMBLY OF FUEL SHUTOFF AND CROSSFEED VALVE. (Refer to Figures 9-7. and 9-8.)

a. Ascertain that the snap ring (4) is installed on the upper portion of the valve (8).

b Place new O-rings (5) on the valve

c. Lubricate the O-rings with DC-55 (MIL-G-4343) and insert the valve (8) in the valve body (3). Place the valve in the valve body so that the valve is allowed only 90° travel between stops.

d. Lock the valve in the valve body by installing the snap ring (4) on the valve

e. For the fuel shutoff valve. install the two clamps. For the crossfeed valve. install one clamp

9-28. LEAK TEST OF FUEL SHUTOFF AND CROSSFEED VALVE.

a. Connect the inlet port of the valve to a 50 psi air source

b. Close the valve and apply air pressure up to a 50 psi and submerge the valve in kerosene or a similar petroleum base fluid for two minutes.

c. There should be no evidence of leakage through the valve port or around the seat

d. Disconnect the air source and wipe fluid from the exterior of the valve.

9-29. INSTALLATION OF FUEL VALVES.

a. Place the valve in its proper position and secure it to its mounting bracket or with attachment clamps whichever valve is being installed.

b. Connect the proper fuel lines to the valve and also connect the control cable to the actuator arm with the attaching hardware. (Refer to Paragraph 9-30.)

c. Put enough fuel in tank, if not already there. and check valve end fittings for leaks

d. Install lower wing root fairing

9-30. ADJUSTMENT OF FUEL SHUTOFF AND CROSSFEED VALVE.

a. Remove the lower wing root fairing on the particular side that the valve adjustment is to be made

b. Disconnect the control cable at the actuator arm on the particular valve and loosen the jam nut at the clevis fitting.

c. Place the shutoff valve actuator arm firmly against the CLOSED position stop pin. Place the appropriate cockpit control lever against its OFF stop position; then carefully move .06 inches off the stop.

d. Carefully align the clevis hole or ball joint with mating hole in the actuator arm of the valve, turning the clevis or ball joint either way if necessary to align with the hole in the arm (ball joint thread engagement must be .25); then secure with attaching hardware.

e. Work the particular control several times to make sure the actuator arm on the valve contacts the stop pin before the control lever in the cockpit contacts its stop.

9-31. FUEL FILTER. (Refer to Figure 9-9.)

NOTE

Refer to List of Vendor Publications, Section II for appropriate Pratt and Whitney Engine Maintenance Manual for information regarding engine-driven rotary fuel pump filter and screen replacement.

9-32. REMOVAL OF FUEL FILTER.

a. Close the fuel shutoff valve.

b. Remove top engine cowl.

c. Disconnect the two main fuel lines from the top of the filter unit along with the elbow fitting in the outlet port of the unit. Disconnect the drain line from the bottom of the filter unit.

d. Remove the fuel bowl drain valve actuator handle from the clamp on the bowl assembly by removing the attachment screw and nut.

e. Remove the safety wire from the three mounting bolts that attach the filter unit to the bracket; remove the bolts, then remove the filter unit

9-33 DISASSEMBLY OF FUEL FILTER.

a. Unscrew the bowl assembly from the head assembly by use of a strap wrench and remove the O-ring seal.

b. Pull the filter element from the head assembly.

9-34. CLEANING, INSPECTION AND REPAIR OF FUEL FILTER.

a. Clean the element with an oil solvent.

b. Inspect the filter element for damage

c. Check condition of O-rings

d. Normal repairs necessary for the filter are: replacement of O-rings and the filter element

9-35. ASSEMBLY OF FUEL FILTER.

a. Install O-ring on element; then install element on head assembly

b. Install O-ring in head assembly; then screw the bowl assembly into the head and torque to 13 + 3 foot-pounds

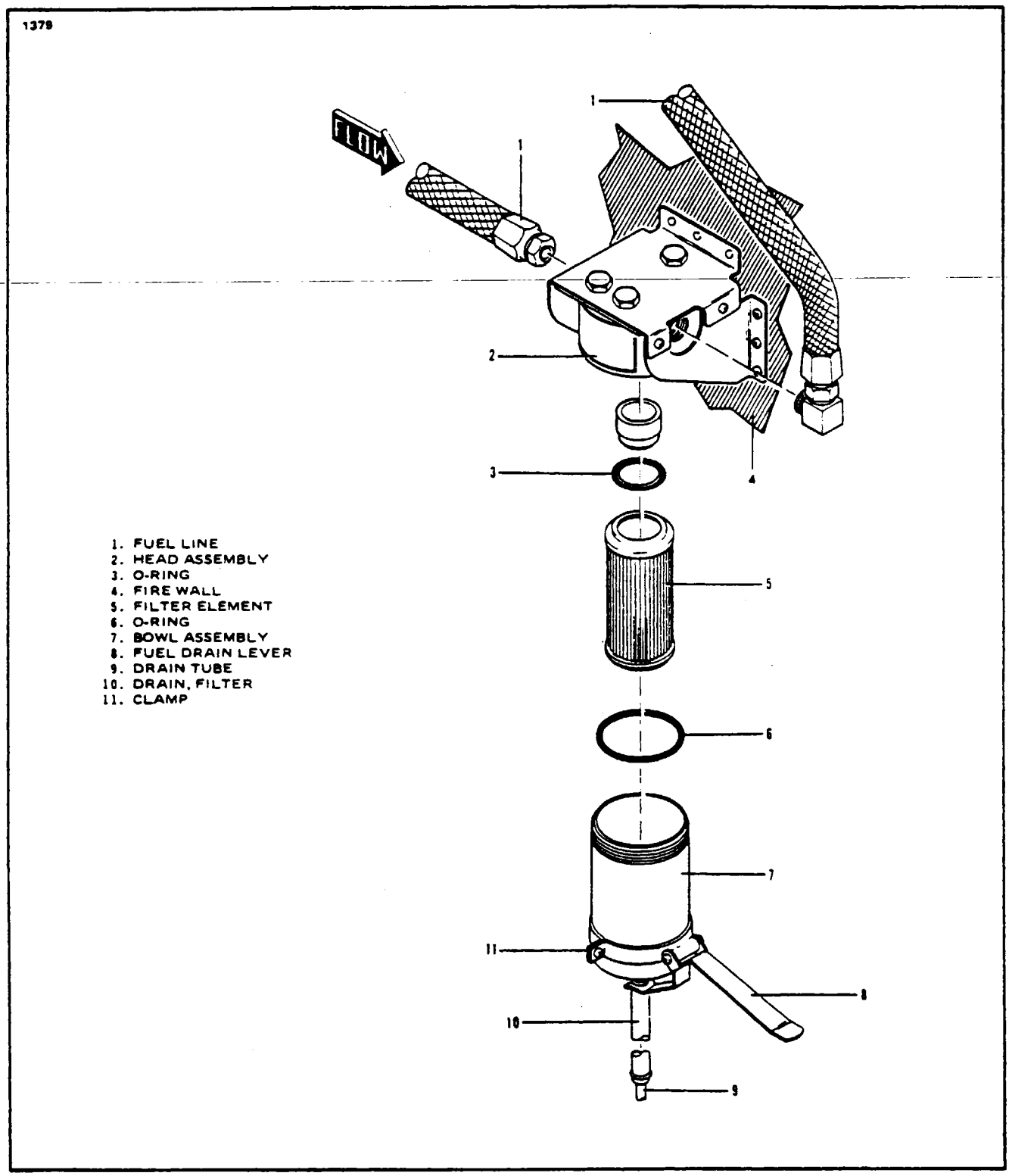

Figure 9-9. Fuel Filter

9-36. INSTALLATION OF FUEL FILTER.

a. Position the filter housing in its proper location with respect to its mounting bracket and secure with the three cap bolts and safety.

b. Install the elbow fitting in the outlet port of the filter housing; then connect the two main fuel lines to their respective fittings.

c. If the fuel bowl quick drain actuator handle was removed, attach it to the mounting clamp on the filter bowl with screw, washer and nut.

d. Connect the filter bowl drain hose to the fitting on the bottom of the bowl.

e. Turn the fire wall fuel valve ON and depress the fuel filter bowl drain valve until a steady flow of fuel is noted. Release handle and check for leaks where the filter bowl assembly screws into the head assembly and also where the two main fuel lines and the filter bowl drain line attach to the filter housing.

NOTE

Fuel cells must be 90% full to get fuel flow from filter.

f. Install top engine cowl.

9-37. REMOVAL AND INSTALLATION OF HEATER FUEL FILTER.

a. Ascertain heater fuel switch is in the OFF position.
b. Remove the copilot's seat and rug on right forward section of cockpit floor.
c. Remove access panel underneath copilot's seat.
d. Disconnect clamp from filter.
e. Disconnect the filter at the line connector fittings and remove the filter.
f. Disassemble filter and inspect filter element for contamination; then reassemble filter.

NOTE

Inspect filter first 100 hours of operation and then every detailed inspection. Change filter at least every 500 hours.

g. Install filter assembly and secure connector fittings.
h. Install clamp.
i. Check heater for operation.
j. Install access panel and secure rug.
k. Install copilot's seat.

9-38. REMOVAL AND INSTALLATION OF SUBMERGED FUEL PUMPS. (Refer to Figure 9-10.)

a. Drain either the entire system or make sure the crossfeed valve is in the OFF position and either wing may be drained separately without fuel from the opposite side draining also. (Refer to Draining Fuel System, Section II.)

b. Remove the lower wing root fairing from the under side of the wing of which the pump or pumps are to be removed.

c. Remove the access plate on top of the wing just ahead of the main spar and next to the fuselage. This will expose the fuel cell cover plate which must be removed also to obtain access to the fuel pumps. (Refer to Figure 9-4.)

d. In the wing root cavity disconnect the electrical connections, fuel and drain lines from the pump or pumps. Drain line on Lear Siegler fuel pump only.

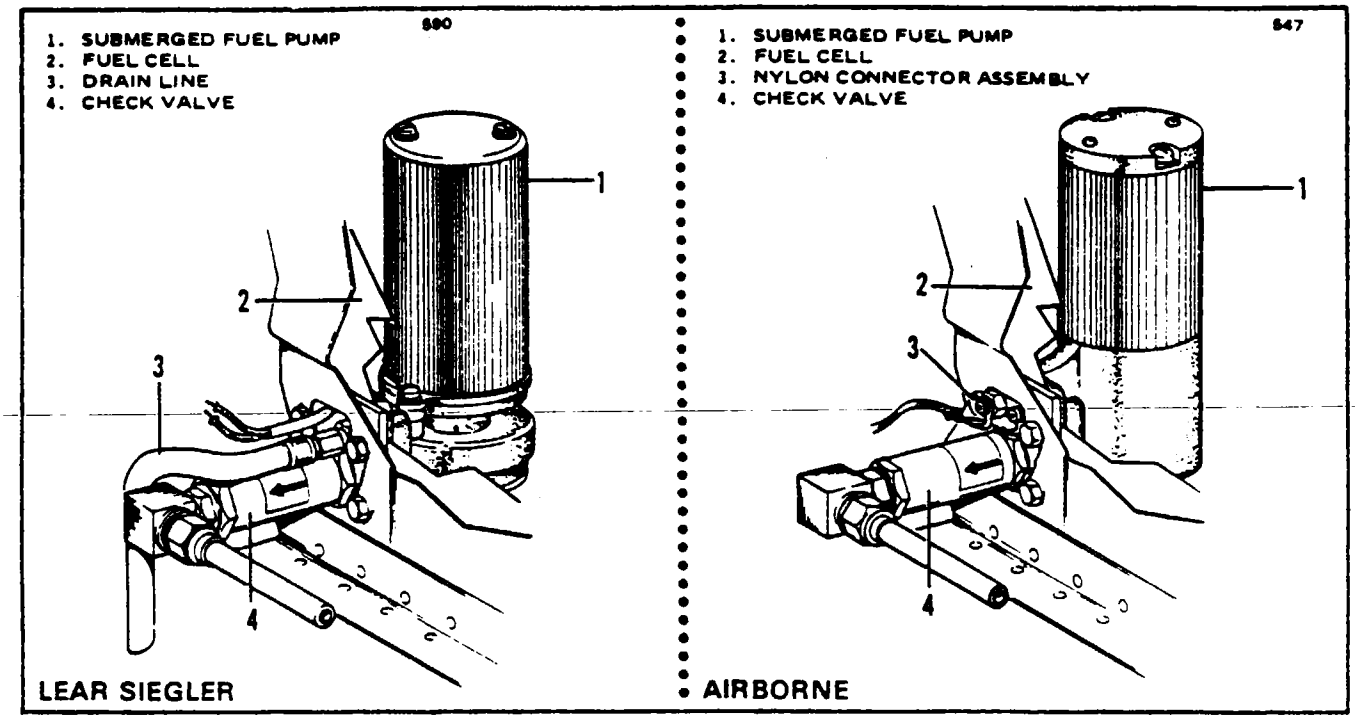

Figure 9-10. Submerged Fuel Boost Pump

CAUTION

The use of a wrench to backup the electrical connection on the airborne fuel pump is recommended to prevent the nylon connector assembly from turning at the pump and destroying the electrical connection within. Care should also be used when removing the fuel line from the check valve and check valve from the pump, so as not to disassemble the check valve.

e. While holding the pump through the cell access opening in the top of the wing, have an assistant remove the four pump mounting bolts in the wing root cavity; then pull the pump up and out of the fuel cell. Either pump is removed in this manner.

f. Installation of either fuel pump is accomplished by first installing a new gasket on the fuel pump mounting boss; then insert the pump into the cell and hold it in place while an assistant attaches it to the wing butt rib with the four mounting bolts.

NOTE

If replacement pumps are Lear Siegler, determine the existence of drain lines in the wing fillet. If no drains exist, obtain Piper Kit No. 761 025 for parts and instruction required to install the Lear Siegler pumps. Airborne fuel pumps do not require drain lines.

g. Reconnect the electrical connections, fuel and drain lines and check valves to their respective positions

h. Install the fuel cell cover plate and access plate on top of the wing. Fill fuel cell through nacelle filler just enough to check for leaks by observing all connections in the wing root cavity.

i. Install the lower wing root fairing.

9-39. REPAIR OF LEAKING NACELLE FUEL TANK. The following procedure should be used for repairing leaks in the nacelle fuel tank. The use of the specified material will allow the least amount of aircraft down time to make the repair

LIST OF MATERIALS

Sealant Material - PR-1435
(Products Research and Chemical Corp.)
PRC Coating and Sealants Division
5426-T San Fernando Rd.
Glendale, CA 91203 (213) 240-2060
Solvent - Methylethylketone (M.E.K.)
Alodine Solution 1200
Small nylon brush
Clean white gauze pads (4 inch squares)
Fillet fairing tools (Refer to Section IV)

PR-1435 is a two-part polysulfide sealant which when mixed has a short application life (15 minutes at 70° F and 50% relative humidity), for every 10° F in temperature the time is reduced by half, and for every 10° F drop in temperature the time is doubled. High humidity at time of mixing also shortens the application life

This sealant will cure to an acceptable hardness in approximately 24 hours at 75° F and 50% relative humidity. Cure may be hastened by applying heat up to 130° F.

NOTE

Nacelle fuel tanks may be filled with fuel one hour after application of the sealant. The cure does not depend upon exposure to air or elevated temperatures, and therefore, will take place even under fuel, without affecting the sealing efficiency.

a. In areas where the original sealant has been scratched, gouged or otherwise damaged, remove the damaged section of fillet with a sharp plexiglas scraper. Taper all cuts in the old sealant at a 45° angle.

b. The original sealant in the fuel tank will be fuel soaked and should be dried in the area of any repair Use a vapor-proof heat lamp or hot air blower.

c. Thoroughly clean all areas to be repaired with solvent such as Methylethylketone (M.E.K.). A progressive cleaning procedure should be used. Wash one small area at a time; then dry with a clean cloth before the solvent evaporates, to prevent redeposition of the oil, fuel, etc., on the surface. Always pour solvent on the washing cloth to maintain a clean solvent supply. Reclaimed solvents should not be used.

d. Check the damaged area for any other repairs which may have to be made before applying the new sealant. Re-alodine any aluminum surfaces which have the original coating removed. Apply aldoine 1200 solution (undiluted) to the affected area with a small nylon brush. Allow the solution to dry until a light golden color appears. When a coating has been formed, remove the excess solution by wiping with a clean water moistened cloth and wipe dry.

WARNING

Do not allow alodine solution to come in contact with hands, eyes or clothing.

e. Just prior to application of PR-1435 sealant the affected area must be recleaned with M.E.K., per instruction given in Step c.

f. Mix the two-part sealant per instruction supplied with it. Proper mixing and correct proportions are extremely important if optimum results are to be obtained.

g. Apply the sealant .125 to .187 of an inch thick to the repair area with a paddle shape tool. Firmly press sealant in place and form into the desired shape. Lap new sealant over old existing sealant .125 to .25 of an inch.

WARNING

This sealant contains flammable and volatile solvents. Keep it away from heat, sparks and flame. Proper precautions must be used when applying this sealant.

Avoid all contact of this sealant with your body, especially contact with open breaks in the skin. Polyethylene mitts should be used and hands washed before eating or smoking.

9-40. NACELLE AND TIP TANK ACCESS PLATE RESEALING. The sealant material to be used for sealing the access plates should be PR-1321B manufactured by:

Products Research and Chemical Corp.
PRC Coating and Sealants Division
5426-T San Fernando Rd.
Glendale, CA 91203 (213) 240-2060

Proceed as follows:

a. Clean all mating surfaces in accordance with paragraph 9-40 step c.

b. Apply a film of sealant 1/32" to 1/16" thick to the surface to be sealed.

c. Install part immediately. Tighten screws to obtain as nearly as possible, a metal-to-metal contact. This squeezes out excess sealant, leaving only enough to fill remaining gaps.

NOTE

After sealing and securing access panels, the nacelle and/or tip tank can be filled with fuel 45 minutes after application of the sealant.

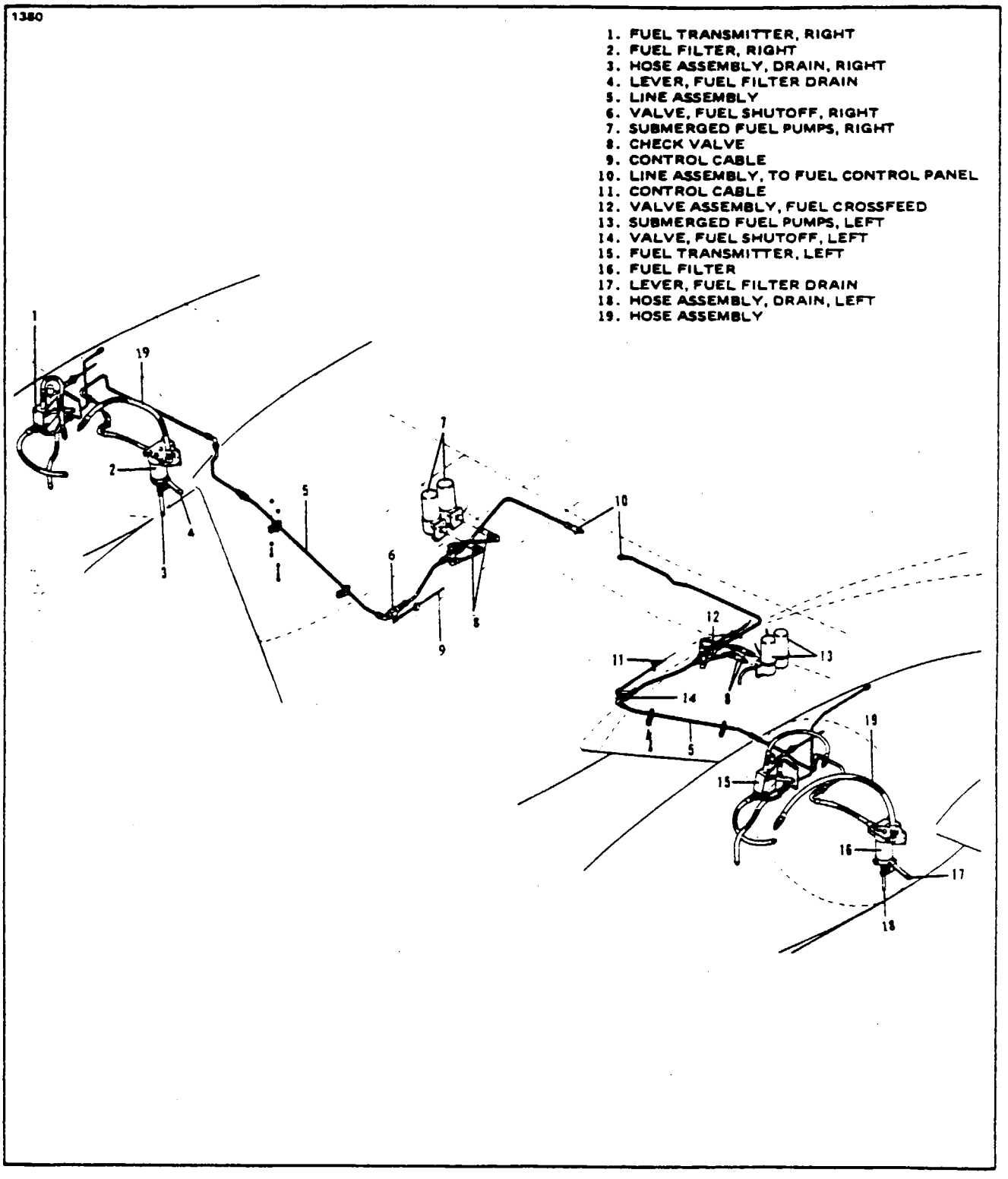

Figure 9-11. Fuel System Installation

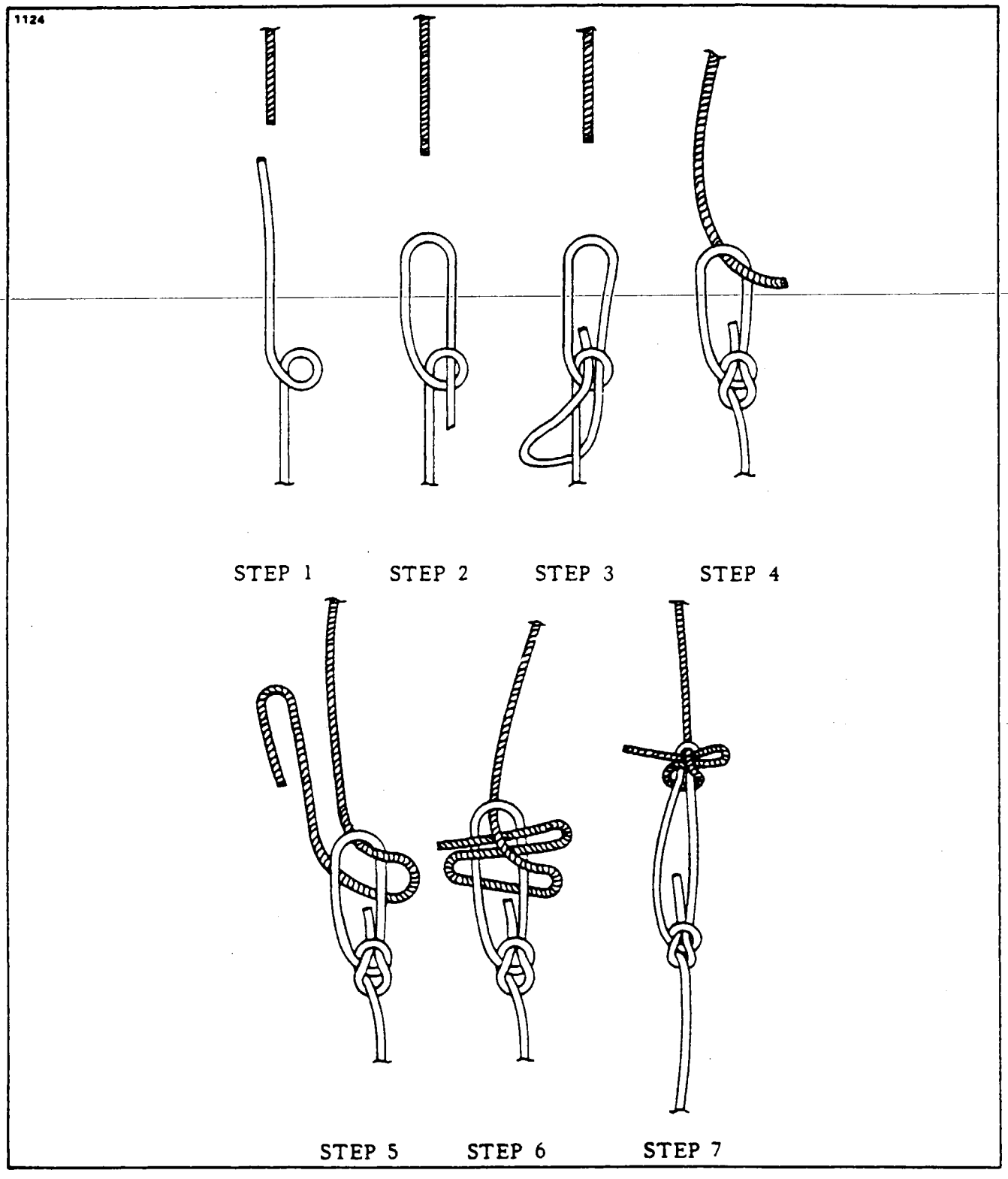

Figure 9-12. Fuel Cell Tie Detail

9-41. FUEL GAUGING SYSTEM.

9-42. DESCRIPTION AND PRINCIPLE OF OPERATION. This is a capacitance type gauging system which senses changes in fuel sensor total capacitance. As fuel rises inside each sensor, it increases the sensor's measurable capacitance, depending on the weight of fuel inside the sensor. (It takes a slightly higher level of warmer or less dense fuel to produce the given sensor capacitance increase.) The sensor capacitance approximately doubles, when it is completely immersed in fuel. The fuel quantity indicator measures the total sensor capacitance increase and indicates how many pounds of fuel were required to produce that much capacitance increase.

The indicator contains a square wave generator which puts out voltage pulses on the "LO Z" wires. The indicator also has two square wave receivers, connected to the LEFT and RIGHT "HI Z" wires. These receivers drive the fuel quantity pointers higher, when higher square wave voltages comes back from the tank sensor units because of an increase in sensor capacitance coupling from "LO Z" to a "HI Z" wire.

The electrical power for the entire system is supplied from the 28-volt dc aircraft power supply. (Refer to Section XV for electrical schematics of the fuel gauging system.)

9-43. REMOVAL AND INSTALLATION OF SENSOR UNITS.

CAUTION

Sensor units must be handled very carefully as damage to the tubes will destroy the accuracy of the units.

There is a fuel sensor unit located in each fuel cell and tank. Each installation will be covered separately. Install in reverse order of removal.

I. TIP TANK: The sensor unit is mounted on the bottom of each tip tank.

a. Remove the fairing between the tip tank and wing.

b. Disconnect the electrical leads at the connectors next to the sensor unit. (Refer to Figure 9-3.)

c. Be sure that the tip tank is completely drained of fuel.

d. Remove the five screws securing the sensor to the tip tank and carefully remove the unit and gasket.

II. NACELLE TANK. The sensor unit is mounted in the upper portion of the nacelle tank, inboard of the filler cap.

a. Remove the access cover next to the filler cap.

b. Disconnect the electrical leads from the sensor unit, mark leads for later reconnection.

c. Be sure that enough fuel has been drained from the system to prevent spillage. (Refer to Section II, Draining Fuel System.)

d. Remove the five screws securing the sensor to the nacelle tank and carefully remove the unit and gasket.

III. MAIN OUTBOARD FUEL CELL: The sensor is mounted in the fuel cell at wing station 104.50.

a. Remove the access panel at wing station 104.50.

b. Disconnect the electrical leads from the sensor unit; mark leads for later reconnection.

c. Be sure that enough fuel has been drained from the system to prevent spillage. (Refer to Section II, Draining Fuel System.)

d. Remove the five screws securing the sensor to the fuel cell and carefully remove the unit and gasket.

IV. MAIN INBOARD FUEL CELL: The sensor is mounted in the fuel cell at wing station 36.00.

a. Remove the access panel at wing station 36.00, and use the same removal procedure as outlined for main outboard fuel cell.

9-44. REPAIRS.

9-45. FUEL QUANTITY INDICATOR. Periodic overhaul of the indicator is not recommended.

9-46 TANK SENSOR UNITS (ALL). Periodic overhaul of all tank units is not recommended.

9-47. CLEANING OF TANK UNITS. All the tank sensor units used in this system can be cleaned with trichloroethylene or any similar degreasing agent. This may restore units found unserviceable due to high electrical leakage (under 10 megohms).

WARNING

Trichloroethylene or other type dry cleaning solvents may produce toxic effects. Use in well ventilated area. Repeated contact of these solvents with the skin can produce skin irritation. The use of rubber gloves is recommended.

CAUTION

Handle sensor units carefully as any damage to the tubes will destroy the accuracy of the unit.

After cleaning the sensor units allow them to air dry. Then check electrical leakage and capacitance.

9-48. TESTING.

WARNING

Use of a hand cranked "megger" or some other kinds of test equipment CAN CAUSE AN EXPLOSION, if used on TANK UNITS OR THEIR WIRING HARNESS, when in the presence of fuel or combustible vapors (installed). The special equipment listed in TABLE IX-I is sold (complete with operation manuals) to be used for proper calibration of the fuel quantity indication system components.

The test equipment listed in Table IX-I can be conveniently inserted between an installed FUEL QUANTITY INDICATOR and its installed aircraft harness. This allows a quick electrical leakage test of the TANK SENSOR UNITS and their harness, or functional and calibration testing of the FUEL QUANTITY INDICATOR. The Table IX-I test equipment can also be used to perform a capacitance calibration test of an individual tank sensor unit mounted in an empty tank. Refer to Table IX-II for Indicator Calibration and Table IX-III for Tank Sensor Unit Calibration capacitance values. See Figure 9-14 Test Equipment Hookup.

TABLE IX-I. TEST EQUIPMENT

Nomenclature	Model No.	Manufacturer	Use
Test Set	2548-H	Barfield Instrument Corp. 4101 N.W. 29th Street P.O. Box 420537 Miami, FL 33142 Phone: 305-871-3900 Telex: 51-8808	Test Sensor Units or Gauge in aircraft or on bench for electrical leakage, or capacitance, and calibration.
Cheyenne I & II Adapter	101-00448		
Lead Package	101-00431 -or- 2 coax/BNC jumper cables		
or			
Test Set	89-108-2	Ragan Data Systems 3-T Oval Dr., P.O. Box 417 Central Islip, NY 11722 Phone: 516-234-3800 TWX: 510-227-4901	
Cheyenne I & II System Harness	78-125-1		
Probe Harness	Comes with test set		
or			
Test Set	GTF-12	Gull Airborne 395 Oser Avenue Smithtown, NY 11787 Phone: 516-231-3737 TWX: 510-227-8557	
Test Harness	Field fabricated		

9-49. TANK SENSOR UNITS. These can be most accurately tested for correct capacitance (calibration) when installed in a metal container grounded to both the sensor mounting flange and the test harness shield ground. See Figure 9-13A. Less accurate readings come from a unit standing or lying on a bench, where nearby metals or insulators other than free air come close to the sensor ends. Figures 9-15 and 9-16 shows the appropriate harness for bench testing tank sensor units with any accurate capacitance bridge. See capacitance values on Table IX-III. Test harness ends may be chosen from the list of aircraft Harness Connectors, following figure 9-16.

9-50. FUEL QUANTITY INDICATOR. When testing one side of a fuel quantity indicator, the meter for the opposite side should be activated to approximately mid-scale, with a fixed capacitor of about 100 pF. Use an accurate capacitance test set (see Table IX-I) to determine that both sides of the Fuel Quantity Indicator read within the limits shown in Table IX-II.

CAUTION

Keep dc instruments or other apparatus containing magnets at least two feet away from the indicator under test, during all testing procedures

a. Ohmmeter Test. Using a VOM set at R x 1, check for jumper continuity between connector pins D to E, and grounding between Pins A, C, G, and case of indicator under test. Resistance must not measure more than 0.2 ohms.

b. Test Setup:
   1. Adjust the regulated dc power supply for +28 ± 0.5 volts and shut off power
   2. Connect indicator under test to test set and harness as shown on Figure 9-15, View A.

c. Line Current Test.
   1. Readjust power supply to +28 volts dc ±0.5 volts as necessary in the remaining tests.
   2. The indicator should draw between 66 and 86 milliampers.

d. Scale Error Test:

NOTE

The indicator being tested should be tapped lightly (3 times per minute) before a test point reading is taken.

1. Connect the test equipment as shown in View A of Figure 9-16. See Figure 9-17 for location of indicator (EMPTY and FULL) calibration screws. Any calibration screw should have sufficient range to compensate for ± 5 pf different capacitance at zero or 1200 pounds. Slowly vary the capacitance tester for left tank simulation to obtain pointer readings shown in Table IX-II, in the down scale direction only Readings obtained must fall within the tolerance specified in Table IX-II. Connect the test equipment as shown in View B of Figure 9-16 and repeat test for the right tank simulation.

e Position Error Test:

1. With the indicator being tested in the normal upright position, obtain down scale reading for both left and right tank simulation on the capacitance tester. When the dial on the indicator reads 700 pounds, note these readings.

2. Rotate the indicator 90 degrees clockwise and repeat Step 1 above; again note readings obtained.

3 Rotate the indicator 90 degrees counterclockwise from the normal upright position and repeat Step 1, above.

4. The four readings obtained in Steps 2 and 3 must fall within ±2.0 pf of the normal upright position reading obtained in Step 1.

f. Pointer Overshoot and Response Time:

1. Disconnect the 28 volt power supply from the indicator being tested. Set the capacitance tester for both the left and right tank simulation to value equivalent to full fuel.

2. Apply the +28 volt power to the indicator being tested and observe both pointers on the dial indicator. There should be no overshoot of the pointers, and the time required for pointers to reach final position (1200 lbs.) should exceed minimum of two seconds.

g. Failure Indication Test:

1. Disconnect the 28 volt power supply to the indicator being tested. Both pointers on the indicator must go off scale and come to rest below the zero mark.

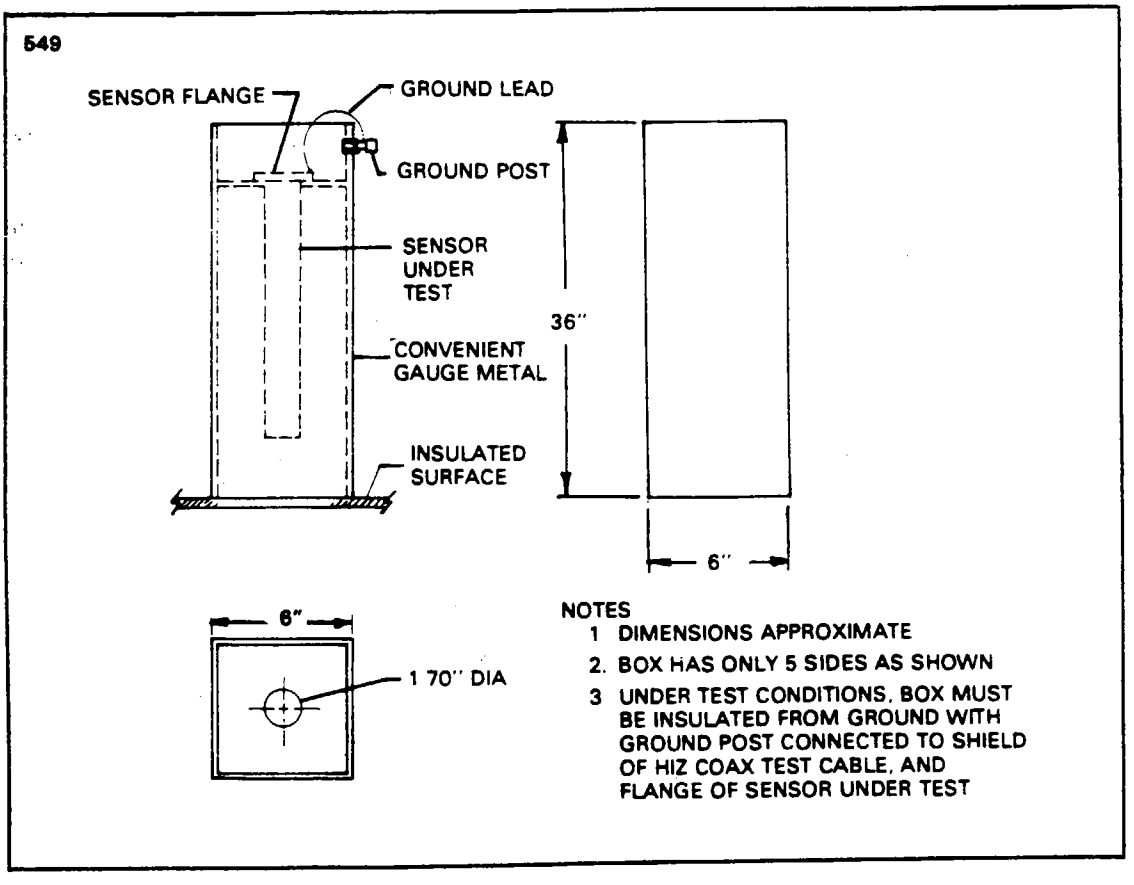

Figure 9-13. Fabrication of Test Fixture for Tank Unit Testing.

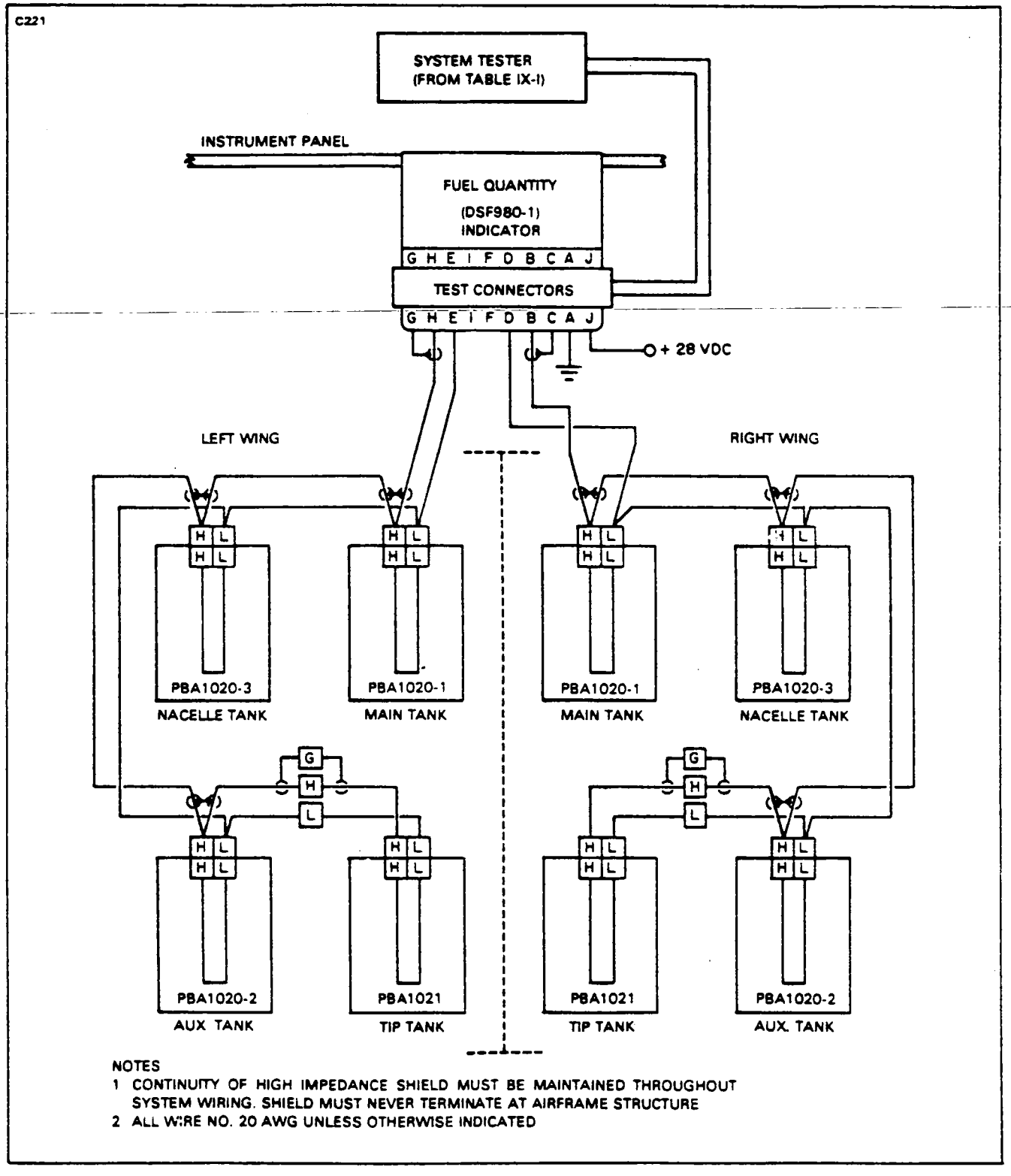

Figure 9-14. Test Equipment Hookup

TABLE IX-II. SCALE ERROR READINGS

Dial (lbs.)	Capacitance Tester Settings (pF) Standard System	With Tip Tanks
1200	—	138.8
1000	—	127.6
980	115.8	—
800	105.8	116.5
600	94.7	105.4
400	83.6	94.3
200	72.4	83.1
0	61.3	72.0
	+/- 3pF	+/- 3pF

TABLE IX-III. TANK UNIT CAPACITANCE (DRY)

Unit Location	Piper Part No.	Tank Unit Model	Capacitance (pF)	Tolerance (±pF)
Tip Tanks	50946-03 550 577	PBA1021	10.75	0.75
Main Inboards	50946-04 550 578	PBA1020-1	12.46	0.75
Main Outboards	50946-05 550 579	PBA1020-2	23.60	0.75
Nacelles	50946-02 550 576	PBA1020-3	21.88	0.75

NOTE: Electrical leakage resistance between "H" and "L" or between "H" or "L" and the Tank Sensor Unit mounting flange must measure 10 or more megohms.

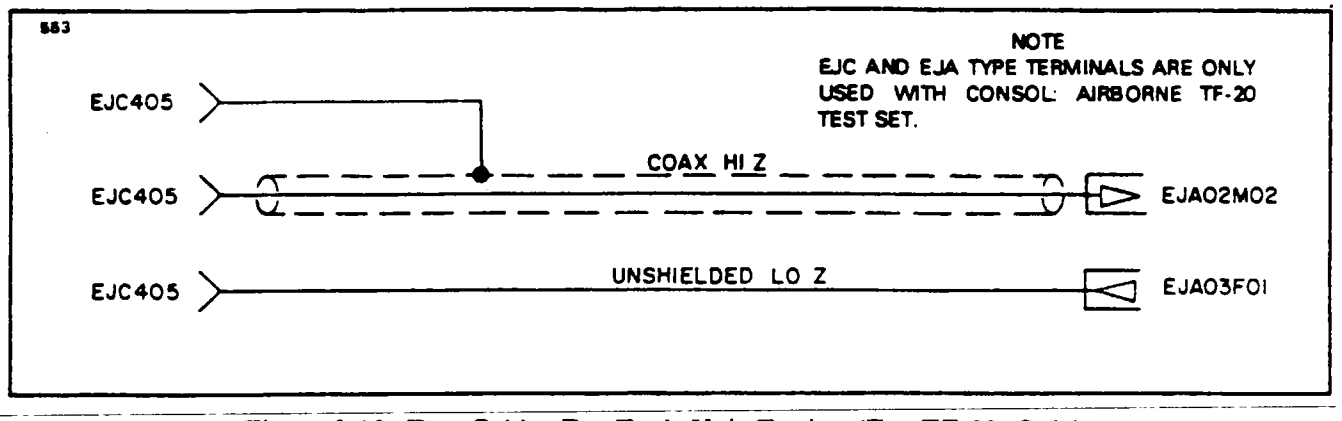

Figure 9-15. Test Cables For Tank Unit Testing (For TF-20, Only)

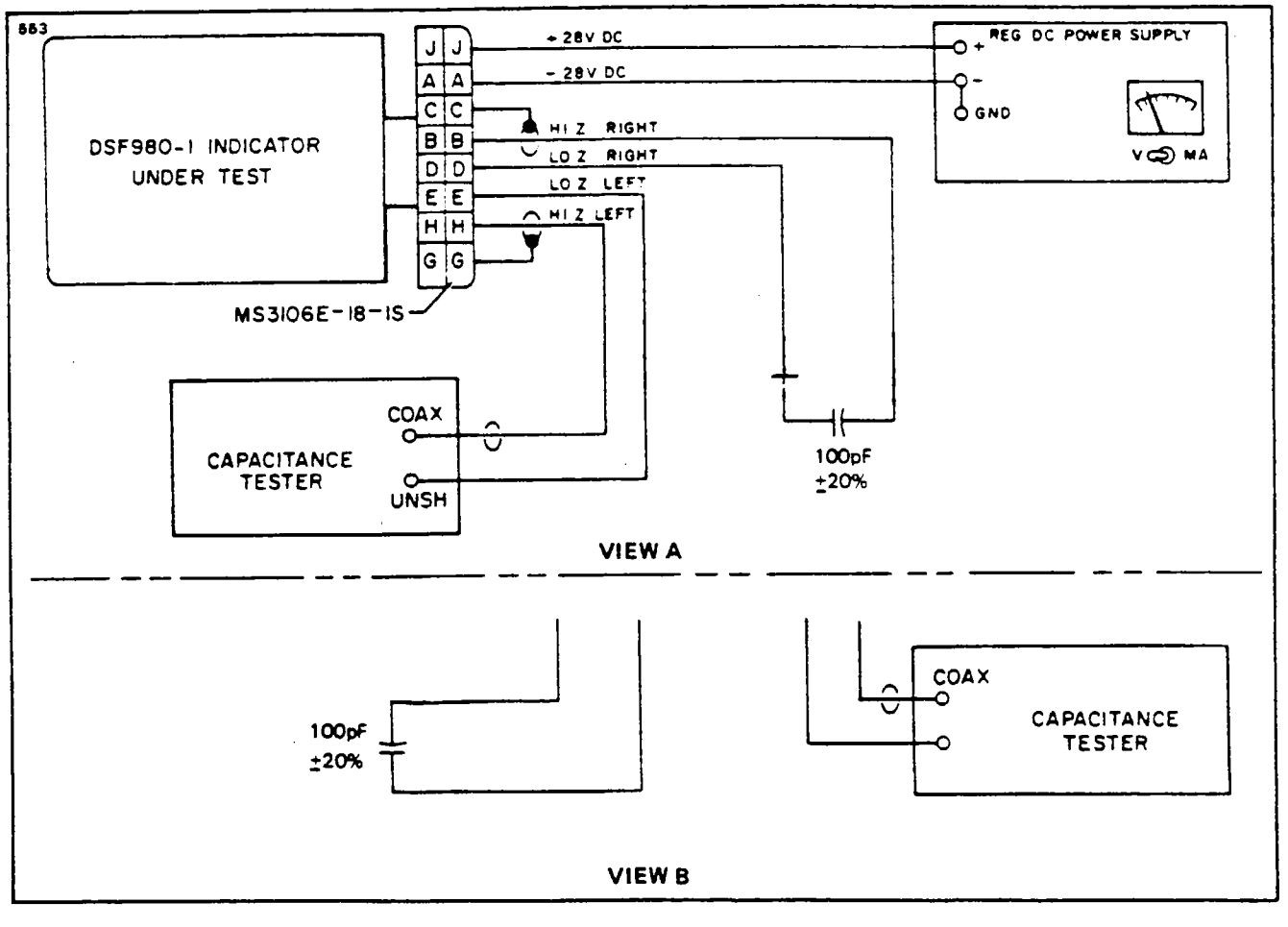

Figure 9-16. Alternate Indicator Bench Test Hookup

9-51. CHECKS AND ADJUSTMENTS OF FUEL QUANTITY GAUGE. (Refer to Figure 9-16a.)

a. Completely drain the fuel system. (Refer to Draining Fuel Cells, Section II.)
b. Level the airplane longitudinally and laterally. (Refer to Leveling, Section II.)
c. Determine that the crossfeed and firewall shutoff valves are closed.
d. Add unusable fuel to the tank. (4 gal. per side. See Table II-I.)

NOTE

The electrical system must supply power to the gauge to make these checks. The gauge must read zero with unusable fuel in the tank, and below zero, when turned off.

e. With the master switch ON, observe the fuel quantity gauges, both should read zero. If not, adjust the particular gauge to read zero by turning the proper set screw, located on the rear of the gauge, marked "Empty - Right and Left" to obtain the zero reading.
f. Add fuel to each wing in increments as indicated in Table IX-II. Fuel quantity gauge indication must be within ± 50 pounds.

CAUTION

1. ***Adjust the quantity gauge, if required, at zero fuel and full fuel only; do not make adjustments anywhere in the mid-range.***
2. ***It is extremely important that the weight of the fuel be accurate, before readjusting the quantity gauge. A particular batch of Jet A that weighs 1200# per 180 U.S. gallons at +70°F will probably take 183 U.S. gallons of +100°F fuel to weigh 1200 pounds.***
3. ***If greater than 50 pound adjustment is made to the FULL setting, in step f., it is important that the EMPTY setting be reverified, according to steps d. and e.***

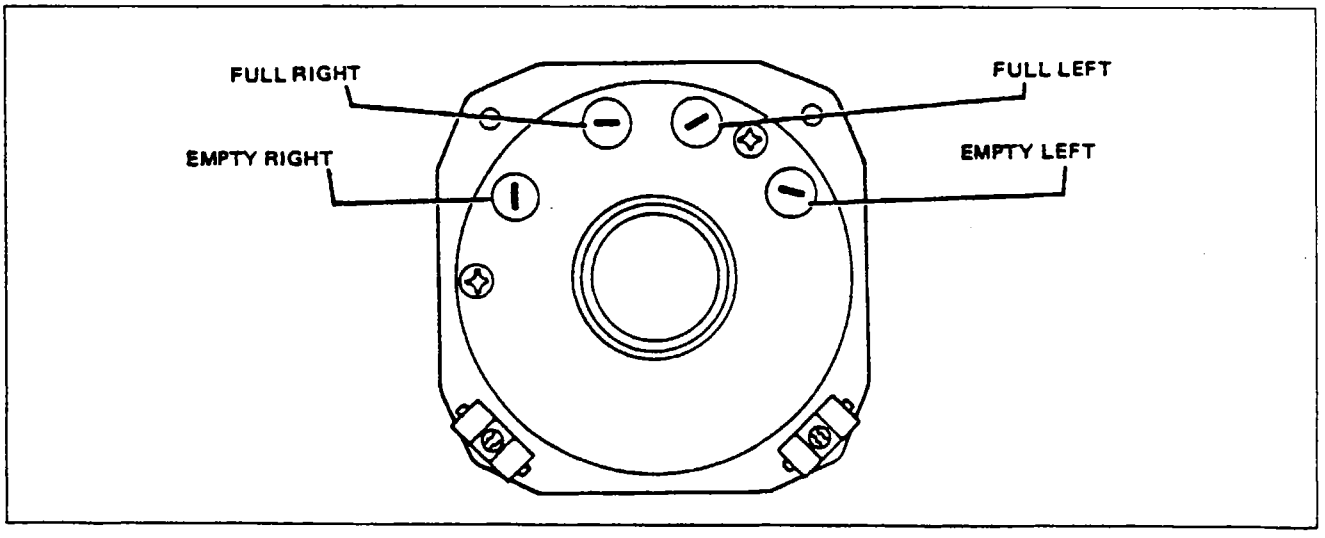

Figure 9-16a. Fuel Gauge Adjustment.

HARNESS CONNECTORS:

1 4" x .032 Spade (Flag) Receptacle is AMP 60290-2 (P/N 588 364) in fold over plastic housing AMP 1-480306-1 (P/N 484 227), for WING or NACELLE TANK SENSORS.

Pin is .080" diameter AMP 61118-1 (P/N 480 791) in AMP 1-480351-0 (P/N 565 375), for TIP TANK SENSOR.

Indicator Connector is MS3106E-18-1S (P/N 555 647).

TABLE IX-IV. TROUBLESHOOTING CHART (FUEL GAUGING SYSTEM)

The biggest source of malfunction will probably be shorted or electrically "leaky" TANK SENSOR UNITS. This can be caused by their exposure to contaminated fuel or corrosive environments. The first test on a troublesome system should be to USE SPECIAL TEST EQUIPMENT FROM TABLE IX-I. to run a 10 or more megohm test of the tank sensor system in each wing.

— WARNING —

DO NOT USE A HIGH VOLTAGE "MEGGER". DANGER OF EXPLOSION. See paragraph 9-48 "WARNING".

Trouble	Cause	Remedy
Dead-gauge does not come up to zero pounds.	No dc power to gauge.	Correct loss of +24V dc to gauge pin "J" or ground to pin "A".
	Dead gauge even with 24Vdc from "J" to "A".	Replace Fuel Quantity Indicator.
Gauge is not dead but does not appear to work	Gauge gets 24V dc but only reads on bench because system in shorted.	Clear short or electrical leakage from wing tank sensors or their wiring. See Figure 9-13.
Gauge appears to work properly on part of its range, only.	One or more bad Tank Sensor Units.	Test each Tank Sensor Unit per Table IX-III.
Gauge appears to work properly but is not properly calibrated.	Tanks are partly or completely filled with other than jet fuel.	Test Fuel Quantity Indicator per Table IX-II and then recalibrate system per paragraph 9-12.

A short anywhere between a "LO Z" wire (or a Tank Sensor Unit outside tube) and airframe ground will make the whole system (both sides) appear to be turned off. If so, disconnect the Fuel Quantity Indicator Connector and measure for possible short from pin "D" (right wing) or pin "E" (left wing) to airframe ground, to determine which side of the airplane has the short.

TABLE IX-V. TROUBLESHOOTING CHART (FUEL SYSTEM)

Trouble	Cause	Remedy
Fuel gauge fails to indicate proper tank level.	Circuit breaker out.	Check and reset.
	Broken wire.	Check and repair.
	Gauge inoperative.	Replace.
	Incomplete ground.	Check ground connection at gauge and at fuel transmitters in the wings.
	Vent holes in fuel transmitter clogged.	Clear vent holes.
Fuel valves leak, pressure low or pressure surges.	Worn O-rings.	Replace O-rings or valve.
	Obstruction in inlet side of pump.	Trace lines and locate obstruction.
	Faulty pump.	Replace pump.
Low fuel pressure.	Fuel valve stuck.	Check valve.
	No fuel in tanks.	Check and fill.
	Filters dirty.	Clean filters.
Unidentified leak.	Fuel lines damaged or improperly installed.	Locate and repair.
	O-rings improperly installed.	Locate and repair or tighten.

TABLE IX-V. TROUBLESHOOTING CHART (FUEL SYSTEM) (cont.)

Trouble	Cause	Remedy
Fuel leaking from NACA vents.	Full fuel tanks and fuel expansion due to exposure to heat.	Defuel aircraft or park in a shaded or cooler location.
	Relief valve in nacelle or float valve in tip tank sticking open or leaking.	Defuel aircraft and inspect valves for condition.
Fuel leaking from filler caps.	Filler caps improperly adjusted and not sealing properly.	Adjust filler caps to obtain tight seal.

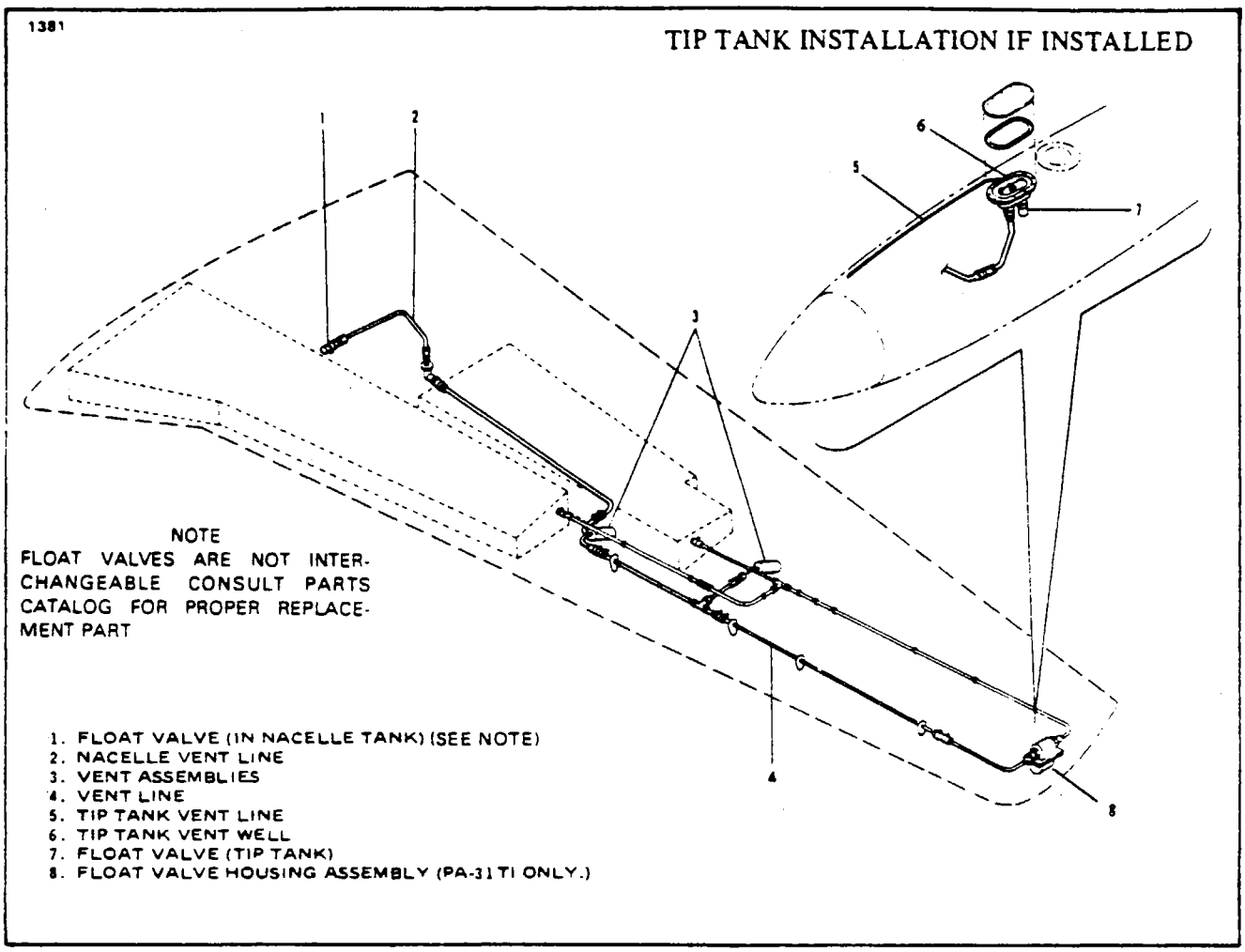

Figure 9-17 Fuel Vent System

9-52. FUEL VENT SYSTEM. (Refer to Figure 9-17.) The main fuel vent line extends from the upper portion of the nacelle fuel tank down through the wing, out to the wing tip or tip tank. A float valve is installed on the end of the vent line in the nacelle tank to prevent fuel from escaping through the vent system. There are two NACA anti-icing type vent assemblies installed along the vent line, these are non-siphoning type which incorporate flame arrestors The tip tank (if installed) has a vent well assembly which has a float valve, tip relief tube and the main vent line connected to it. This vent well is sealed from the fuel storage area in the tip tank, except for the float valve and relief tube which extends to the forward top portion of the tank The float valve installed in the tip tank vent well prevents fuel from escaping through the vent line. The relief tube allows the fuel system to vent during climb attitude with full fuel aboard, and may allow fuel to escape when the tanks are full and fuel expansion takes place due to heat, such as the aircraft being parked on the ramp and being exposed to high ramp temperatures

SECTION X

INSTRUMENTS

Paragraph		Aerofiche Grid No.
10-1.	Introduction	3F5
10-2.	Description	3F5
10-3.	Instrument Panel	3F5
10-4.	Instruments	3F5
10-5.	Removal of Instruments	3F5
10-6.	Installation of Instruments	3F6
10-7.	Pitot and Static System	3F10
10-8.	Description	3F10
10-9.	Maintenance	3F10
10-10.	Troubleshooting	3F10
10-11.	Inspection and Checks of Instruments and System	3F10
10-12.	Instruments (Non-Electrical)	3F11
10-13.	Airspeed Indicator	3F11
10-14.	General	3F11
10-15.	Troubleshooting	3F11
10-16.	Removal and Replacement	3F11
10-17.	Sensitive Altimeter	3F11
10-18.	General	3F11
10-19.	Troubleshooting	3F11
10-20.	Removal and Replacement	3F11
10-21.	Rate of Climb Indicator	3F11
10-22.	General	3F11
10-23.	Troubleshooting	3F11
10-24.	Removal and Replacement	3F11
10-25.	Magnetic Compass	3F11
10-26.	General	3F11
10-27.	Troubleshooting	3F11
10-28.	Removal and Replacement	3F12
10-29.	Cabin Pressurization Instruments	3F12
10-30.	General	3F12
10-31.	Troubleshooting	3F12
10-32.	Removal and Replacement	3F12
10-33.	Pneumatic System Pressure Gauge	3F12
10-34.	General	3F12
10-35.	Troubleshooting	3F12
10-36.	Removal and Replacement	3F12

Paragraph		Aerofiche Grid No.
10-37.	Oil Pressure Gauge (Wet Direct Reading and Electric)	3F12
10-38.	General	3F12
10-39.	Troubleshooting	3F12
10-40.	Removal and Replacement	3F12
10-41.	Fuel Pressure Gauge (Wet Direct Reading and Electric)	3F12
10-42.	General	3F12
10-43.	Troubleshooting	3F12
10-44.	Removal and Replacement	3F13
10-45.	Clock	3F13
10-46.	General	3F13
10-47.	Removal and Replacement	3F13
10-48.	Instruments (Electric)	3F13
10-49.	Oil and Fuel Pressure Gauges (Electric)	3F13
10-50.	Attitude Gyro	3F13
10-51.	General	3F13
10-52.	Troubleshooting	3F13
10-53.	Removal and Replacement	3F13
10-54.	Directional Gyro	3F13
10-55.	General	3F13
10-56.	Troubleshooting	3F13
10-57.	Removal and Replacement	3F13
10-58.	Turn and Bank Indicator	3F13
10-59.	General	3F13
10-60.	Troubleshooting	3F13
10-61.	Adjustment of Turn and Bank Vacuum Regulator	3F14
10-62.	Checking Pneumatic Check Valve	3F14
10-63.	Removal and Replacement	3F16
10-64.	Air Temperature Gauge	3F16
10-65.	General	3F16
10-66.	Troubleshooting	3F16
10-67.	Removal and Replacement	3F16
10-68.	Ammeter	3F16
10-69.	General	3F16
10-70.	Troubleshooting	3F16
10-71.	Removal and Replacement	3F16
10-72.	Voltmeter	3F16
10-73.	General	3F16
10-74.	Troubleshooting	3F16
10-75.	Removal and Replacement	3F16
10-76.	Fuel Quantity Gauge (Dual)	3F16
10-77.	General	3F16
10-78.	Troubleshooting	3F16
10-79.	Removal and Replacement	3F16
10-80.	Fuel Flow Gauge	3F17

Paragraph		Aerofiche Grid No.
	10-81. General	3F17
	10-82. Troubleshooting	3F17
	10-83. Removal and Replacement	3F17
10-84.	Oil Temperature Gauge	3F17
	10-85. General	3F17
	10-86. Troubleshooting	3F17
	10-87. Removal and Replacement	3F17
10-88.	Engine Torque Gauge	3F17
	10-89. General	3F17
	10-90. Troubleshooting	3F17
	10-91. Removal and Replacement	3F17
10-92.	Inter-Turbine Temperature Gauge	3F17
	10-93. General	3F17
	10-94. Troubleshooting	3F17
	10-95. Removal and Replacement	3F17
10-96.	Tachometer (Propeller)	3F18
	10-97. General	3F18
	10-98. Troubleshooting	3F18
	10-99. Removal and Replacement	3F18
10-100.	Tachometer (Gas Generator)	3F18
	10-101. General	3F18
	10-102. Troubleshooting	3F18
	10-103 Removal and Replacement	3F18
10-104.	Engine Hour Recorder	3F18
	10-105. General	3F18
	10-106. Troubleshooting	3F18
	10-107. Removal and Replacement	3F18
10-108.	Flap Indicator	3F19
	10-109. General	3F19
	10-110. Troubleshooting	3F19
	10-111. Removal and Replacement	3F19
10-112.	Stall Margin Indicator	3F19
	10-113. General	3F19
	10-114. Troubleshooting	3F19
	10-115. Removal and Replacement	3F19
10-116.	Annunciator Display	3F19
	10-117. General	3F19
	10-118. Troubleshooting	3F19
	10-119. Removal and Replacement	3F19
10-120.	Stall Warning Indicator and Lift Detector	3F19
	10-121. Removal of Lift Detector	3F19
	12-122. Installation of Lift Detector	3F19
	10-123. Adjustment of Lift Detector	3F19

SECTION X

INSTRUMENTS

10-1. INTRODUCTION. The purpose of this section is to provide instructions for remedying difficulties which may arise in the operation of the various electrical and non-electrical instrumentation. The instructions are organized so that the mechanic can refer to Description, for a basic understanding of the instruments; Troubleshooting, for a methodical approach in locating the difficulty; and Removal and Replacement to aid the mechanic. Maintenance, other than described in this section, shall be done by the instrument manufacturer or an authorized repair station.

10-2. DESCRIPTION. The instrumentation of the Cheyenne is designed to give an actual indication of the attitude, performance and condition of the aircraft. The instruments are divided into two groups, electrical and non-electrical. Electrically operated instruments are protected with circuit breakers to isolate the individual instruments in the event of trouble. Indicator and warning lights are installed to provide the pilot with information regarding safe operation of the various systems.

10-3. INSTRUMENT PANEL. The instrument panel is arranged to accommodate flight instruments on the left side, in front of the pilot; engine instruments and electronic equipment in the center. A second set of flight instruments may be installed in the right panel for use by the copilot. The flight instrument panels are shock-mounted to minimize vibration and shock transmitted to the instruments.

10-4. INSTRUMENTS.

10-5. REMOVAL OF INSTRUMENTS. The majority of instruments are mounted in a similar manner; therefore, a typical removal and installation is provided as a guide for the removal and installation of the instruments. Special care should be taken when any operation pertaining to the instruments is performed.

a. The non-shock-mounted instruments may be removed by the following procedure:

1. At the back of the panel, unscrew the electrical connector from the post light(s).
2. Disconnect the plumbing and/or electrical connector from the back of the instrument. Where two or more lines connect to an instrument, identify each line to facilitate reinstallation. Attach a dust cap or plug to each fitting.
3. Remove the post light(s) by turning off nut.
4. Remove the screws that secure the instrument in the panel cutout.
5. Remove the instrument from the panel.

b. To remove instruments mounted in the overhead panel assembly, it is necessary to remove the panel to gain access to the back of the instruments.

c. The shock mounted instruments may be removed by the following procedure:

1. Unsnap the forward side of the instrument panel cover and slide forward enough to allow it to move from its attachment slot. Remove the cover from over the panel.
2. Pull the control wheel that is at the opposite side of the instrument panel from where the shock mounted panel is to be removed, to its aftmost position and secure with a cord tied between the wheel and around the seat back.
3. Pad the control wheel tube with foam rubber or similar material.
4. Remove the four self-locking nuts that secure the floating panel to its shock mounts. There is one nut located on the panel at each side of the control wheel tube, and one nut located at each side of the panel, near the top. With an open end wrench held next to the backside of the panel, hold the rubber mounts to eliminate twisting as the nuts are being removed.
5. Pull the panel back and allow it to rest on the padded control wheel tube.
6. Unscrew the electrical connector from the post light(s).
7. Disconnect the plumbing and/or electrical connector from the back of the instrument and identify each line to facilitate reinstallation. Attach a dust cap or plug to each fitting.
8. Remove the post light(s) by turning off nut.
9. Remove the screws that secure the instrument in the panel cutout.
10. Remove the instrument from the panel and secure the panel from rolling off the control tube.
11. Check the general condition of the rubber shock mounts and replace, if necessary.

d. Typical removal for a front mounted instrument is as follows:

1. Release the instrument by removing the attaching hardware from the front of the instrument.
2. Carefully slide the instrument out of the panel exposing all plumbing and/or electrical connections at the rear of the instrument.
3. Disconnect and label all plumbing and/or electrical lines. Remove instrument and cap disconnected pneumatic lines.

10-6. INSTALLATION OF INSTRUMENTS.

a. The non-shock mounted instruments may be installed by the following procedure:

1. Place the instrument in its proper panel cutout and secure with screws.
2. Install the post light(s) and secure. Do not overtighten nut.
3. Connect the plumbing and/or electrical connector to back of instrument.
4. Connect the electrical connector of the post light(s). Tighten connector finger tight.
5. Check instrument and post light(s) operation.

b. The shock mounted instruments may be installed by the following procedure:

1. Place the instrument in its proper panel cutout and secure with screws.
2. Install the post light(s) and secure. Do not overtighten nut.
3. Connect the plumbing and/or electrical connector to back of instrument.
4. Connect the electrical connector of the post light(s). Tighten connector finger tight.
5. Ascertain that one end of the ground straps is placed over the panel side of the shock mount stud.
6. Place the floating panel in position and allow the shock mount attachment studs to protrude through the panel. Install and tighten attachment nuts.
7. Remove the padding and release the control wheel.
8. Check the instrument and post light operation.

c. Install front mounted instruments in the reverse order of removal.

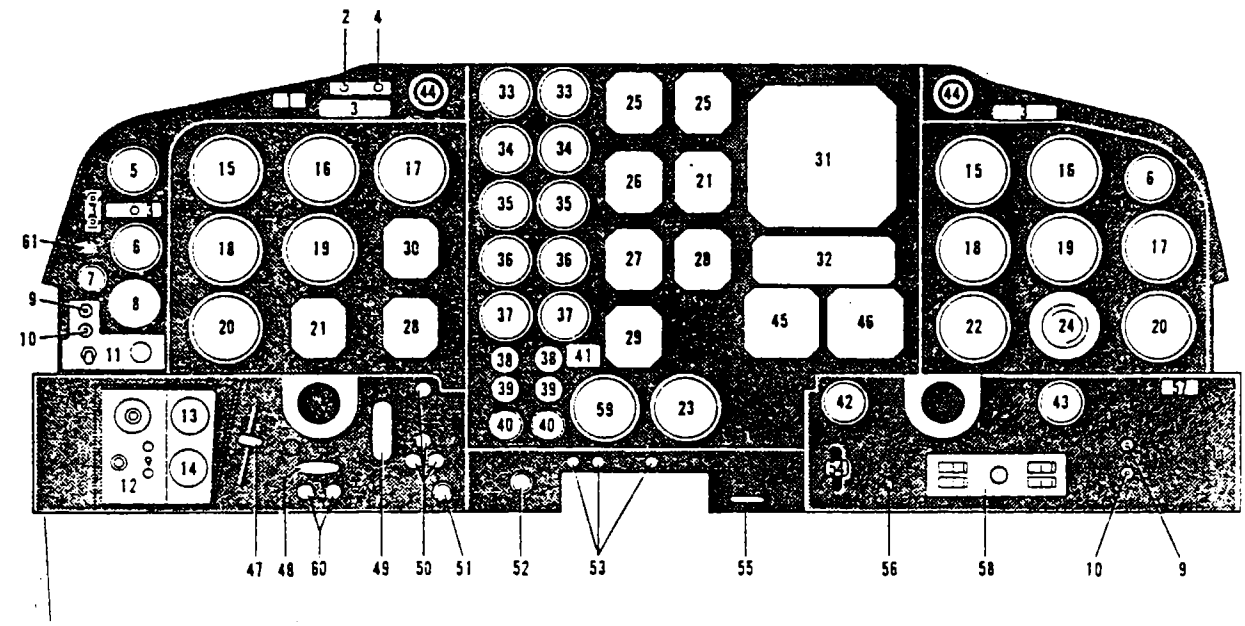

1. PLATE
2. LIGHT, STALL WARNING
3. PLACARD
4. LIGHT, MASTER CAUTION
5. INDICATOR, STALL MARGIN
6. CLOCK
7. GAUGE, PNEUMATIC PRESSURE
8. GAUGE, OUTSIDE AIR TEMPERATURE
9. MIKE JACK
10. PHONE JACK
11. CABIN PRESSURE CONTROLS
12. CABIN ALTITUDE CONTROLS (EARLY INSTL.)
13. GAUGE, CABIN RATE OF CLIMB
14. GAUGE, CABIN DIFFERENTIAL PRESSURE AND CABIN ALTITUDE
15. INDICATOR AIRSPEED
16. ATTITUDE GYRO
17. ALTIMETER
18. INDICATOR, TURN AND BANK
19. DIRECTIONAL GYRO
20. INDICATOR, RATE OF CLIMB
21. ADF
22. GAUGE, DUAL FUEL QUANTITY
23. RADAR ALTIMETER
24. COVER
25. COMM I
26. COMM II
27. NAV I
28. NAV II
29. TRANSPONDER
30. NAV I OR ADF
31. RADAR
32. KA-37
33. GAUGE, ENGINE TORQUE
34. GAUGE, ITT
35. GAUGE, PROPELLER RPM
36. GAUGE, ENGINE RPM
37. GAUGE, FUEL FLOW
38. GAUGE, FUEL PRESSURE
39. GAUGE, OIL PRESSURE
40. GAUGE, OIL TEMPERATURE
41. PLACARD
42. FLAP INDICATOR
43. OXYGEN PRESSURE INDICATOR
44. AIR DUCT
45. DME
46. RIGHT NAV
47. PRESSURIZATION AIR CONTROL
48. KNOB, PARKING BRAKE
49. KNOB, LANDING GEAR SELECTOR
50. LIGHTS, GEAR INDICATOR
51. KNOB, OXYGEN SYSTEM
52. KNOB, WINDSHIELD WIPER
53. LIGHTS, PROPELLER INDICATOR
54. KNOB, FLAP POSITION
55. SELECTOR VALVE, STATIC PRESSURE
56. SWITCH, HEATER FUEL
57. ENGINE HOUR METER
58. CABIN COMFORT CONTROL ASSEMBLY
59. ANNUNCIATOR DISPLAY
60. H.T.G. SWITCHES, RIGHT AND LEFT
61. VACUUM GAUGE

Figure 10-1 Instrument Panel Installation (Typical)

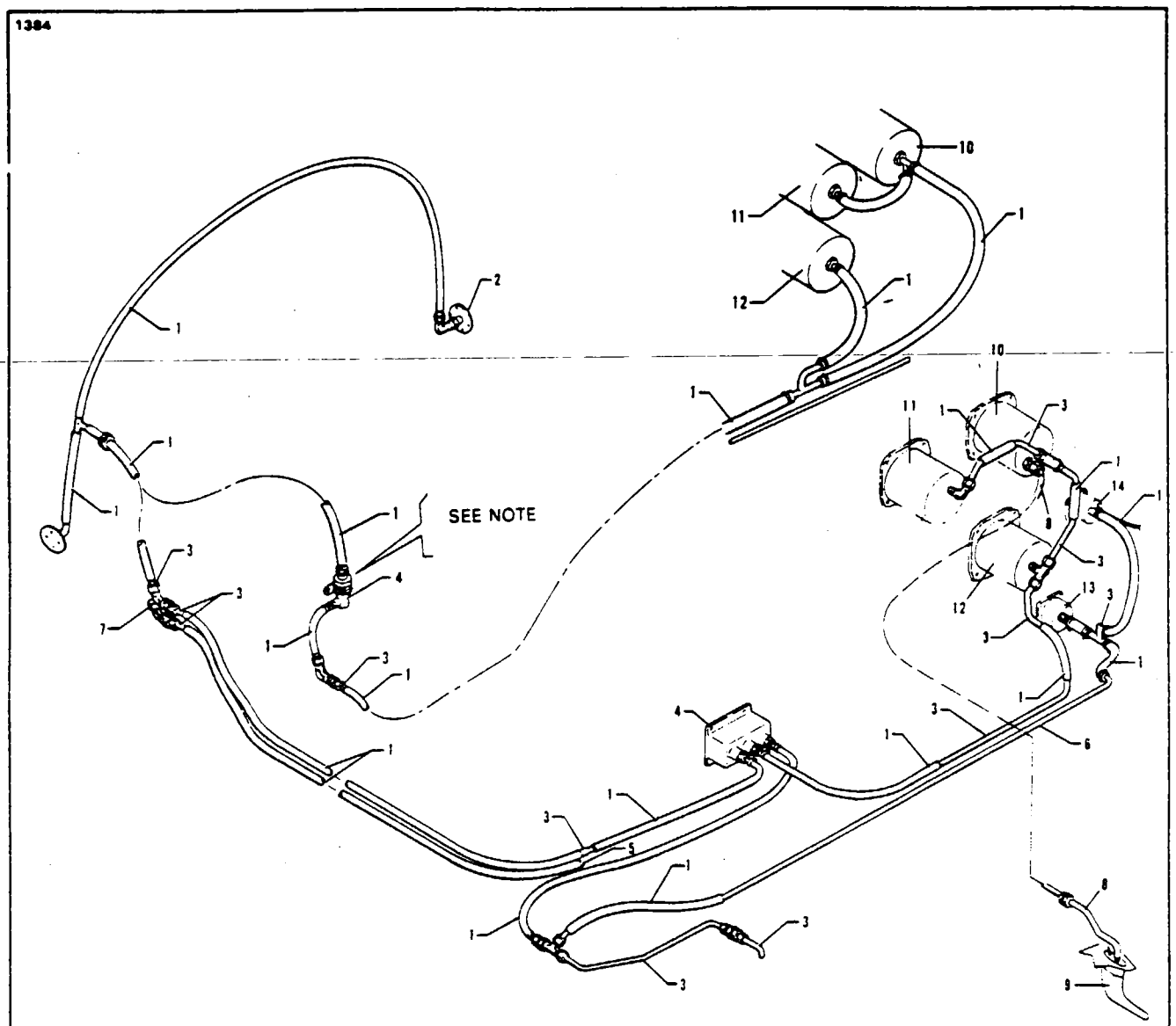

1 HOSE, STATIC PRESSURE
2 STATIC LINE VENT, LEFT & RIGHT
3 LINE ASSEMBLY - STATIC PRESSURE
4 VALVE STATIC AIR PRESSURE
5 PLUG BUTTON
6 MANIFOLD ASSEMBLY, STATIC AIR
7 CAP ASSEMBLY
8 HOSE, PITOT
9 TUBE PITOT
10 INDICATOR, AIRSPEED
11 ALTIMETER
12 INDICATOR, RATE OF CLIMB
13 CABIN DIFF PRESSURE & ALTITUDE
14 PNEUMATIC PRESSURE

NOTE
USED IF BUTLER POD IS INSTALLED (REFER TO PARTS CATALOG FOR PART NUMBERS)

Figure 10-2. Pitot-Static Installation

1293

NOTE

ADVISORY CIRCULAR AC 43-203A DESCRIBES AN ACCEPTABLE MEANS OF COMPLYING WITH STATIC SYSTEM TEST REQUIRED BY FAR PART 91, SECTION 91.170 FOR AIRCRAFT OPERATED UNDER IFR CONDITIONS. FOR STATIC SYSTEM TEST FOR AIRCRAFT NOT OPERATED IN CONTROLLED AIRSPACE UNDER IFR CONDITIONS, SEE ADVISORY CIRCULAR AC 43.13-1A, SECTION 4 OF CHAPTER 16.

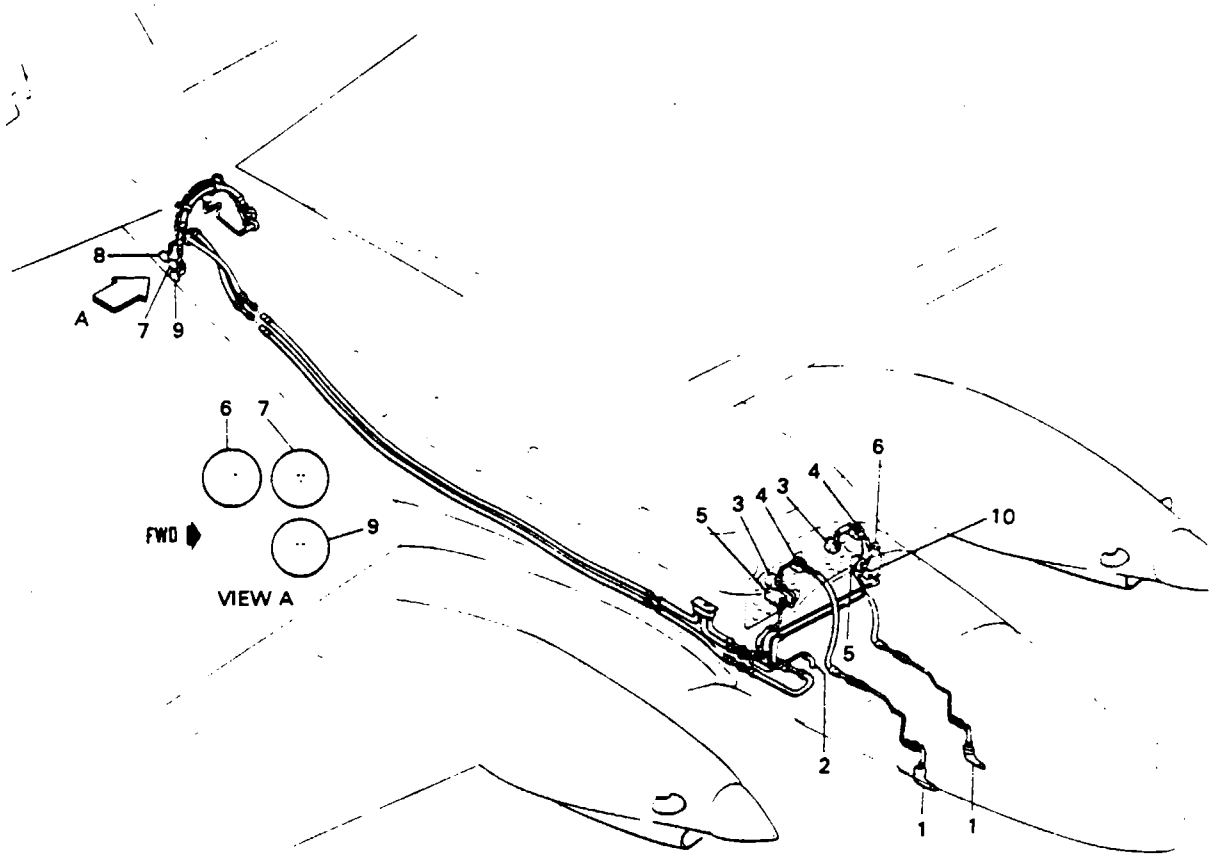

1. PITOT HEAD
2. ALTERNATE STATIC SOURCE
3. ALTIMETER
4. AIRSPEED INDICATOR
5. RATE OF CLIMB INDICATOR
6. PNEUMATIC PRESSURE GAUGE
7. STATIC SOURCE FOR PILOT'S INSTRUMENTS
8. STATIC SOURCE FOR COPILOT'S INSTRUMENTS
9. STATIC SOURCE FOR ALTIMATIC M-4D ALTITUDE CONTROLLER
10. CABIN DIFF PRESSURE AND ALTITUDE

Figure 10-3. Instrument Air System Installation

10-7. PITOT AND STATIC SYSTEM.

10-8. DESCRIPTION. The pitot system transfers ram air from the electrically heated pitot tube located on the underside of the fuselage through tubing to the airspeed indicator.

The purpose of the static system is to vent the flight instruments, pneumatic pressure gauge, cabin differential pressure gauge, and the fuel and oil pressure gauge to ambient atmospheric pressure. The static system consists of two static vents located in the aft fuselage section, an alternate static air source located in the forward fuselage, controlled by a selector valve located in the cockpit, all interconnected by tubing.

10-9. MAINTENANCE. Maintenance of the pitot-static system is necessary to insure the proper operation of the instruments connected to the system. If the aircraft has dual pitot-static systems, both must be tested and inspected. These tests and inspections must be conducted every 24 calender months and comply with FAR's Part 91, Section 91.170 and Appendix E of Part 43. Advisory Circular AC 43-203A describes an acceptable means of complying with static system test required by FAR's Part 91, Section 91.170.

CAUTION

Never blow air through the pitot or static lines towards the instruments.

NOTE

When any connections in the system are opened for checks, the system must be rechecked per AC 43.13-1A, Chapter 16, Section 4.

10-10. TROUBLESHOOTING. (Refer to Table X-I.)

10-11. INSPECTION AND CHECKS OF INSTRUMENTS AND SYSTEM. During the regular inspection of the airplane or whenever an instrument or instruments is changed or serviced, the following inspection and checks should be made to the complete system:

a. Inspect the pitot-static system for cleanliness, condition, security and operation per Advisory Circular No. AC 43-203A for aircraft operated in controlled airspace under IFR conditions. Aircraft not operated in controlled airspace should be tested per Advisory Circular AC 43.13-1A, Section 4 of Chapter 16.

b. Inspect the instruments for poor condition, mounting, markings, broken or loose and/or missing knobs, bent or missing pointers, and improper operation (where applicable).

c. Check power-off indications of instrument pointers and warning flags for proper indication.

d. Apply power and check for excessive mechanical noise, erratic or intermittent operation, failure to indicate, sluggishness or indication of excessive friction. Note if the erection or warm-up time is excessive, caging functions are normal, and warning flags and indicating lights and test circuits are operable.

e. Note operation of instruments during engine runup. Check for intermittent or improper operation of any instrument.

f. Inspect the complete system for general condition, apparent and obvious defects, insecurity of attachments, tubing connections and pneumatic tubing for security, leaks, corrosion, cracks, bends and pinching and any evidence of chafing.

g. Check electrical connections and circuit breakers for proper size, security and condition. Check instrument lighting system for range of illumination, burned out bulbs and defective controls. Check wiring for chafing, excessive tension, improper support or broken lacing and ties.

h. Check instruments for evidence of overheating or contamination of equipment by foreign matter or water. Dust, dirt and lint contribute to overheating of equipment, poor ventilation and malfunctioning. Special attention should be given that ventilation openings in equipment housings are open and free from obstructing lint and dust.

10-12. INSTRUMENTS (NON-ELECTRICAL).

10-13. AIRSPEED INDICATOR.

10-14. GENERAL. The airspeed indicator provides a means of indicating the speed of the aircraft passing through the air. The airspeed indication depends on the differential pressure between pitot air pressure and static air pressure. This instrument has the diaphragm vented to the pitot air source, and the case is vented to the static air system. As the airplane increases speed, the pitot air pressure increases, causing the diaphragm to expand. A mechanical linkage picks up this motion and moves the instrument pointer to the indicated speed. A second pointer on the instrument indicates the maximum allowable airspeed with respect to altitude. The instrument is calibrated in miles per hour and also has the necessary operating range markings for safe operation of the airplane.

10-15. TROUBLESHOOTING. (Refer to Table X-II.)

10-16. REMOVAL AND REPLACEMENT. (Refer to Paragraphs 10-5 and 10-6.)

10-17. SENSITIVE ALTIMETER.

10-18. GENERAL. The altimeter indicates pressure altitude in feet above sea level. The indicator has three pointers and a dial scale; the long pointer is read in hundreds of feet, the middle pointer in thousands of feet and the short pointer in tens of thousands of feet. A barometric pressure window is located on the right side of the indicator dial and is set by the knob located on the lower left corner of the instrument. The altimeter consists of a sealed diaphragm that is connected to the pointers through a mechanical linkage. The instrument case is vented to the static air system and as static air pressure decreases, the diaphragm expands, causing the pointers to move through the mechanical linkage. The altimeters must be tested and inspected every 24 calendar months and comply with FAR's Part 91, Section 91.170 and Appendix E of Part 43.

10-19. TROUBLESHOOTING. (Refer to Table X-III.)

10-20. REMOVAL AND REPLACEMENT. (Refer to Paragraphs 10-5 and 10-6.)

10-21. RATE OF CLIMB INDICATOR.

10-22. GENERAL. The rate of climb indicator measures the rate of change in static pressure, and indicates the rate of ascent or descent of the aircraft in feet per minute

10-23. TROUBLESHOOTING. (Refer to Table X-IV.)

10-24. REMOVAL AND REPLACEMENT. (Refer to Paragraphs 10-5 and 10-6.)

10-25. MAGNETIC COMPASS.

10-26. GENERAL. The magnetic compass is a self-contained instrument mounted overhead in line with the windshield centerstrip. The instrument has an individual light which is connected to the instrument lighting circuit.

10-27 TROUBLESHOOTING. (Refer to Table X-V.)

10-28. REMOVAL AND REPLACEMENT. (Refer to Paragraphs 10-5 and 10-6.)

10-29. CABIN PRESSURIZATION INSTRUMENTS.

10-30. GENERAL. The cabin pressurization instruments consist of a combination cabin differential pressure and cabin altitude gauge that indicates cabin altitude in feet and differential pressure between the cabin and outside atmosphere. A cabin rate-of-climb instrument indicates the rate at which the cabin altitude is changing in feet per minute.

10-31. TROUBLESHOOTING. (Refer to Section XIII or XIIIA.)

10-32. REMOVAL AND REPLACEMENT. (Refer to Paragraphs 10-5 and 10-6.)

10-33. PNEUMATIC SYSTEM PRESSURE GAUGE.

10-34. GENERAL. The pneumatic system pressure gauge monitors the regulated pressure of the engine compressor bleed air from the gas generator case. The gauge is mounted in the left instrument panel and is calibrated from 0 to 25 psi.

10-35. TROUBLESHOOTING. (Refer to Table X-VI.)

10-36. REMOVAL AND REPLACEMENT. (Refer to Paragraphs 10-5 and 10-6.)

10-37. OIL PRESSURE GAUGE. (Wet Direct Reading and Electric)

10-38. GENERAL. The engine oil pressure gauge monitors engine oil pressure at the main oil pressure pump in the accessory gearbox case. The gauge is calibrated from 0 to 125 pounds per square inch

10-39. TROUBLESHOOTING. (Refer to Table X-VII.)

10-40. REMOVAL AND REPLACEMENT (Refer to Paragraphs 10-5 and 10-6.)

10-41. FUEL PRESSURE GAUGE. (Wet Direct Reading and Electric)

10-42. GENERAL. The fuel pressure gauges monitor fuel pressure at the fuel flow transmitter. The gauges are mounted in the center instrument panel and are calibrated from 0 to 50 psi.

10-43. TROUBLESHOOTING. (Refer to Table X-VIII.)

10-44. REMOVAL AND REPLACEMENT. (Refer to Paragraphs 10-5 and 10-6.)

10-45. CLOCK.

10-46. GENERAL. The clock is an eight day timepiece, incorporating a stem wind with the knob at the lower left hand side of the dial. Some aircraft are equipped with either an aircraft powered electrical digital clock or a battery (AAA type) Quartz movement digital clock. Regardless of type clock installed, clocks are mounted on the instrument panel.

10-47. REMOVAL AND REPLACEMENT. (Refer to Paragraphs 10-5 and 10-6.)

10-48. INSTRUMENTS. (Electric)

10-49. OIL AND FUEL PRESSURE GAUGES. (Electric) (Refer to Paragraphs 10-37 through 10-41.)

10-50. ATTITUDE GYRO.

10-51. GENERAL. The attitude gyro is an electrically driven gyroscope rotating in a horizontal plane Due to the gyroscopic inertia, the spin axis continues to point in the vertical direction, providing a constant visual reference to the attitude of the aircraft relative to pitch and roll axis. A bar across the face of the indicator represents the horizon, and aligning the miniature aircraft to the horizon bar simulates the alignment of the aircraft to the actual horizon. Any deviation simulates the deviation of the aircraft from the true horizon. The gyro horizon is marked for different degrees of bank.

10-52. TROUBLESHOOTING. (Refer to Table X-IX.)

10-53 REMOVAL AND REPLACEMENT. (Refer to Paragraphs 10-5 and 10-6.)

10-54. DIRECTIONAL GYRO

10-55. GENERAL The directional gyro is a flight instrument incorporating an electrically driven gyro stabilized in the vertical plane Due to gyroscopic inertia, the spin axis continues to point in the same direction even though the aircraft yaws to the right or left.

10-56 TROUBLESHOOTING. (Refer to Table X-X.)

10-57. REMOVAL AND REPLACEMENT. (Refer to Paragraphs 10-5 and 10-6.)

10-58. TURN AND BANK INDICATOR

10-59 GENERAL. The turn and bank indicator is a self-contained gyroscopic flight instrument used to indicate the attitude of the aircraft about the yaw and roll axis. The turn portion of the indicator mounted in the pilot's instrument panel utilizes a vacuum driven gyroscope, while the turn portion of the copilot's instrument indicator is electrically driven The vacuum turn and bank indicator is powered by vacuum produced at the pressurization system ejector using unregulated engine bleed air The amount of vacuum produced is a function of engine power level; therefore, a vacuum regulator controls gyro vacuum to 2.1 inches of mercury

The bank portion of the indicator is a ball sealed in a curved glass tube filled with damping fluid. In an improperly coordinated turn, the ball is forced from the center of the tube indicating attitude error.

10-60. TROUBLESHOOTING. (Refer to Table X-XI.)

10-61. ADJUSTMENT OF TURN AND BANK VACUUM REGULATOR.

a. Remove the center fuselage floor panel at station reference number 151.3. The regulator is mounted on the bulkhead assembly at station 151.3 under the floor panel.

b. Remove the one-quarter inch flare tube cap from the test port fitting in the instrument line behind the left side of the instrument panel.

c. Connect a vacuum test gauge to the test port. The test gauge must be capable of indicating at least 4 inches of Hg. with graduations of 0.1 inches Hg.

d. Activate the cabin pressurization test switch to remove vacuum from the isobaric valve while adjusting the vacuum regulator.

e. Place the pressure control lever in the outside air position to prevent any pressurization of the cabin that would effect the test gauge reading. Adjust the regulator using either of the following methods:

f. ENGINE OPERATING METHOD:

1. Start the engines and allow to stabilize.

2. Set the power levers to obtain 80% (Ng) gas generator speed.

3. Disengage the locking tabs from the adjusting pin and adjust the regulator to obtain 2.1 inches Hg. at 80% Ng speed. Clockwise adjustment increases vacuum.

NOTE

One turn of the adjusting pin will change the vacuum reading about 0.35 inches Hg. and the gyro rate about 12 seconds.

g. SHOP AIR METHOD:

1. The regulator may be adjusted with the engines static by supplying sufficient shop air at 60 to 80 psi to the engine bleed line.

2. Disconnect the flexible hose connecting the engine bleed line in either nacelle at the forward end of the hose.

3. Fabricate an adapter to connect the flexible hose to the source of shop air through a control valve and pressure gauge. If insufficient air results in a pressure less than 60 psi, do not use this method to set the vacuum regulator.

4. Adjust the regulator to obtain 2.1 inches Hg. Clockwise adjustment increases vacuum.

10-62. CHECKING PNEUMATIC CHECK VALVE.

a. Remove center floorboard just aft of main spar.

b. Locate the hose connecting the regulator to the ejector. Loosen the base clamp that attaches at the inboard side of the right-hand longitudinal beam.

c. Detach and pull enough of the hose end from under the floor to gain access to its open end.

d. Insure that the existing check valve is installed with the word "HINGE" facing up.

e. Place the hose end against your mouth and blow lightly into the hose. The check valve (on the other side of the regulator) should prevent any flow (toward instruments) with light pressure. If any leak is detected, remove the check valve and obtain a new valve of the same part number. Before installation, blow lightly through the valve to be sure it operates properly.

f. Install the new valve with the word "HINGE" facing up. Recheck the new valve per step g preceding.

g. Reinstall hose, hose clamp and center floorboard.

h. Check operation of the relief valve (7), Figure 10-4.

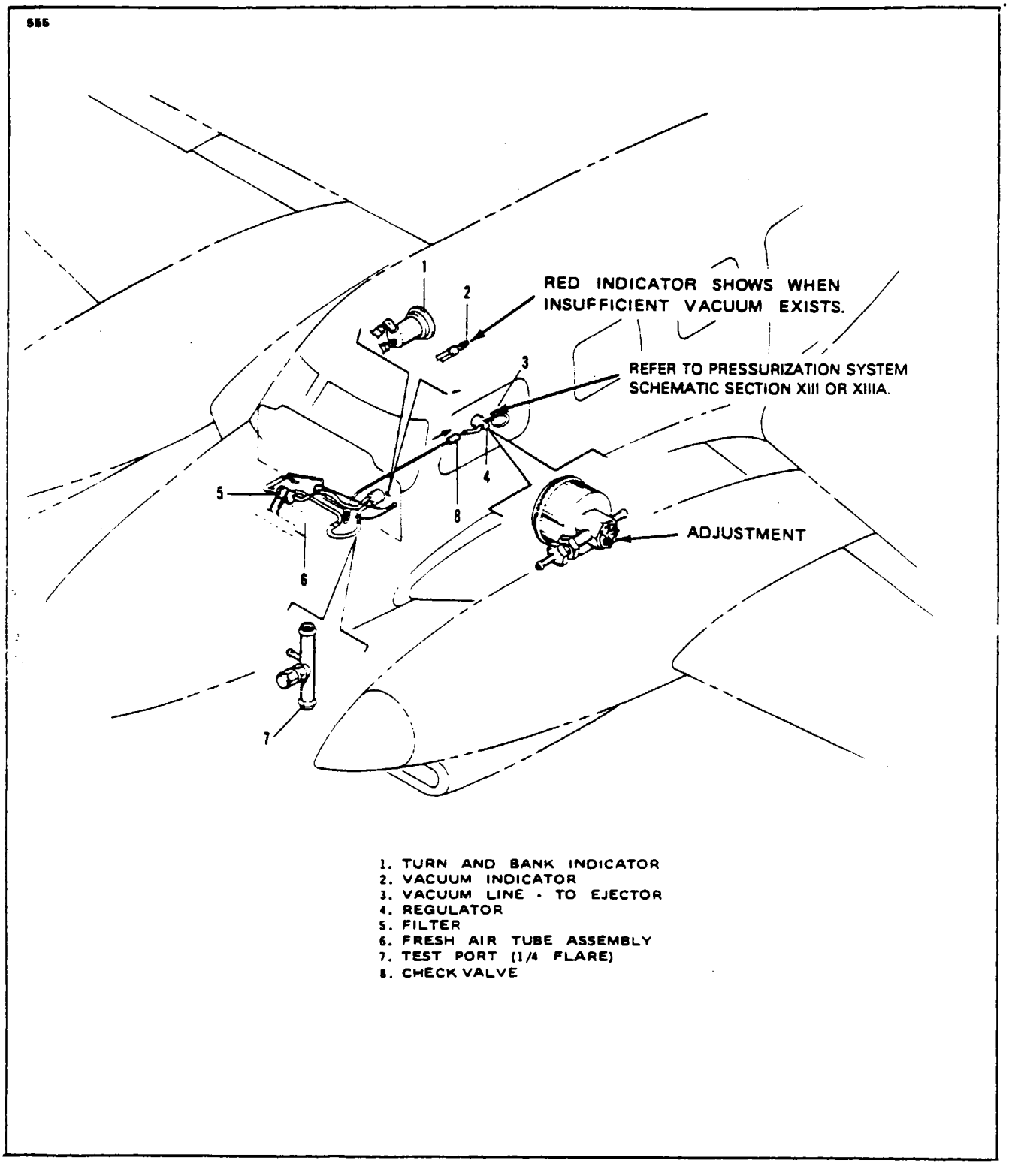

Figure 10-4. Turn and Bank Vacuum System

10-63. REMOVAL AND REPLACEMENT. (Refer to Paragraphs 10-5 and 10-6.)

10-64. AIR TEMPERATURE GAUGE.

10-65. GENERAL. The air temperature gauge is an electrically operated instrument that measure the outside air temperature by means of a temperature bulb located in the lower left fuselage underneath the cockpit. The electrical resistance of the temperature bulb varies directly as the outside air temperature, and this resistance is indicated on the gauge in degrees Fahrenheit and Centigrade.

10-66. TROUBLESHOOTING. (Refer to Table X-XII.)

10-67. REMOVAL AND REPLACEMENT. (Refer to Paragraphs 10-5 and 10-6.)

10-68. AMMETER.

10-69 GENERAL. The ammeters are located in the overhead instrument panel, and are connected in series with the battery charging circuit. The ammeters measure the total current flow in the electrical system.

10-70. TROUBLESHOOTING. (Refer to Section XI.)

10-71. REMOVAL AND REPLACEMENT. (Refer to Paragraphs 10-5 and 10-6)

10-72. VOLTMETER.

10-73. GENERAL. The voltmeter is located in the overhead instrument panel. The meter indicates the total voltage in the electrical system.

10-74 TROUBLESHOOTING. (Refer to Table X-XIII.)

10-75. REMOVAL AND REPLACEMENT. (Refer to Paragraphs 10-5 and 10-6)

10-76 FUEL QUANTITY GAUGE (DUAL).

10-77. GENERAL. The fuel quantity gauge is a dual needle type calibrated in pounds of fuel from 0 to 1400. The gauge indicates the amount of fuel using a capacitance probe type sending unit located in each tank. (Refer to Section IX. Fuel System for guage calibration adjustments.)

10-78. TROUBLESHOOTING. (Refer to Table X-XIV.)

10-79. REMOVAL AND REPLACEMENT. (Refer to Paragraphs 10-5 and 10-6.)

10-80. FUEL FLOW GAUGE.

10-81. GENERAL. The fuel flow gauge is an electrical instrument used in conjunction with a fuel flow transmitter to provide an indication of the rate of fuel consumption in pounds per hour. The fuel flow transmitter is mounted on the fire wall, and monitors the fuel flow to the fuel control inlet. The transmitter generates an electrical signal which is then transmitted to the fuel flow gauge.

10-82. TROUBLESHOOTING. (Refer to Table X-XV.)

10-83 REMOVAL AND REPLACEMENT. (Refer to Paragraphs 10-5 and 10-6.)

10-84. OIL TEMPERATURE GAUGE.

10-85. GENERAL. The oil temperature gauge electrically monitors engine lubricating oil temperature using a temperature bulb located at the delivery side of the main oil pressure pump in the accessory gearbox case.

10-86 TROUBLESHOOTING. (Refer to Table X-XVI.)

10-87. REMOVAL AND REPLACEMENT. (Refer to Paragraphs 10-5 and 10-6.)

10-88 ENGINE TORQUE GAUGE.

10-89. GENERAL. The engine torque gauge monitors engine torque being produced by the power turbine The torque pressure valve is obtained by tapping the two outlets on the top of the reduction gearbox case. The pressure differential between the two outlets is monitored by a pressure transmitter, and then transmitted to the torque gauge which is calibrated in lb-ft. Refer to Section VIII or VIIIA for torque system calibration.

10-90. TROUBLESHOOTING (Refer to Table X-XVII.)

10-91. REMOVAL AND REPLACEMENT. (Refer to Paragraphs 10-5 and 10-6.)

10-92. INTER-TURBINE TEMPERATURE GAUGE.

10-93. GENERAL. The inter-turbine temperature gauge monitors engine operating temperatures between the compressor and power turbines. Ten individual thermocouple probes projected into the inter-turbine inlet guide vanes provide the indicator with the engine operating temperature.

10-94. TROUBLESHOOTING. (Refer to Table X-XVIII.)

10-95. REMOVAL AND REPLACEMENT. (Refer to Paragraphs 10-5 and 10-6.)

10-96. TACHOMETER (PROPELLER).

10-97. GENERAL. The propeller tachometer monitors the speed of the propeller by means of a tachometer generator mounted on the reduction gear box case. The tachometer generator provides an electric current directly proportional to the speed of the propeller. The gauge is calibrated in revolutions per minute from 0 to 2400.

10-98. TROUBLESHOOTING. (Refer to Table X-XIX.)

10-99. REMOVAL AND REPLACEMENT. (Refer to Paragraphs 10-5 and 10-6.)

10-100. TACHOMETER (GAS GENERATOR).

10-101. GENERAL. The gas generator tachometer monitors the speed of the gas generator by means of a tachometer generator mounted on the accessory gear box case. The tachometer generator provides an electric current that is directly proportional to the speed of the gas generator. The gauge is calibrated in % RPM with 100% being equivalent to 37,500 rpm.

10-102. TROUBLESHOOTING. (Refer to Table X-XIX.)

10-103. REMOVAL AND REPLACEMENT. (Refer to Paragraphs 10-5 and 10-6.)

10-104 ENGINE HOUR RECORDER.

10-105. GENERAL. The engine hour recorder operates in conjunction with a pressure switch installed on the engine. Engine oil pressure actuates the switch, thus recording actual running time regardless of engine RPM.

10-106 TROUBLESHOOTING. (Refer to Table X-XX.)

10-107. REMOVAL AND REPLACEMENT. (Refer to Paragraphs 10-5 and 10-6.)

10-108. FLAP INDICATOR.

10-109. GENERAL. The wing flap indicator monitors the position of the flaps by means of a potentiometer attached to the left flap.

10-110. TROUBLESHOOTING. (Refer to Section V, Surface Controls.)

10.111 REMOVAL AND REPLACEMENT. (Refer to Paragraphs 10-5 and 10-6.)

10-112. STALL MARGIN INDICATOR.

10-113. GENERAL. The stall margin indicator monitors a signal from a computer to indicate the position of the angle of attack sensor vane mounted on the right side of the fuselage. The indicated reading corresponds to the flight regimen of the aircraft. The instrument markings are as follows:

a. Red area - stall
b Red and black striped area - stall warning
c. Yellow area - slow
d. White area - approach on earlier gauges and 1.3 on new gauges.
e. Green area - cruise.

10-114. TROUBLESHOOTING. (Refer to Section XI.)

10-115. REMOVAL AND REPLACEMENT. (Refer to Paragraphs 10-5 and 10-6.)

10-116. ANNUNCIATOR DISPLAY

10-117. GENERAL. The annunciator system provides audio visual indication as to the malfunction of systems that are essential to the safe operation of the aircraft. The system consists of a master caution light, an aural warning horn, an individual light cluster with a push to test switch for the entire system, and an electronic sensing package which is connected to sensors on the following systems.

a. Engine fire warning (left and right)
b. Engine fire extinguisher inoperative (left and right)
c. Engine oil temperature (left and right)
d. Engine oil pressure (left and right)
e. Nose baggage door ajar
f Fuel pressure (left and right)
g. Cabin pressure
h. Generator inoperative (left and right)
i. Cabin door unsafe
j. Battery overtemperature

10-118. TROUBLESHOOTING. (Refer to Table X-XXI.)

10-119. REMOVAL AND REPLACEMENT. (Refer to Paragraphs 10-5 and 10-6.)

10-120. STALL WARNING INDICATOR AND LIFT DETECTOR. (Refer to Section XI.)

10-121. REMOVAL OF LIFT DETECTOR. (Refer to Section XI.)

10-122. INSTALLATION OF LIFT DETECTOR. (Refer to Section XI.)

10-123. ADJUSTMENT OF LIFT DETECTOR. (Refer to Section XI.)

TABLE X-I. PITOT-STATIC SYSTEM

Trouble	Cause	Remedy
Tube does not heat or clear itself of ice with switch "ON."	Circuit breaker popped.	Reset.
	Open circuit.	Repair.
	Excessive voltage drop between battery at pitot head.	Check voltage at pitot head.
	Heating element burned out.	Replace pitot head.
Pointers of static instruments do not indicate properly.	Leak in instrument, case or in pitot lines.	Check for leak and seal.
Airspeed indicator reads high.	Leak in static line.	Check for leak and seal.
Low or sluggish airspeed indication.	Obstruction or leak in pitot lines.	Remove static lines from all instruments, and blow line clear from cockpit to pitot head, check for leaks.
Airspeed changes as aircraft is banked.	Water in static line.	Clear lines. (Refer to Paragraph 10-9.)

TABLE X-II. AIRSPEED INDICATOR

Trouble	Cause	Remedy
Pointers of static instruments do not indicate properly.	Leak in instrument case or in pitot lines.	Check for leak and seal.
Pointer of instrument oscillates.	Defective mechanism.	Replace instrument.
Instrument reads high.	Pointer not on zero.	Replace instrument.
	Leaking static system.	Find leak and correct.
Instrument reads low.	Pointer not on zero.	Replace instrument.
	Leaking static system.	Find leak and correct.
	Pitot head not aligned correctly.	Re-align pitot head.
Airspeed changes as aircraft is banked.	Water in pitot line.	Remove lines from static instruments and blow out lines from cockpit to pitot head.

TABLE X-III. ALTIMETER

Trouble	Cause	Remedy
Excessive scale error.	Improper calibration adjustment.	Replace instrument.
Excessive pointer oscillation.	Defective mechanism.	Replace instrument.
High or low reading.	Improper venting.	Eliminate leak in static pressure system and check alignment of airspeed tube.
Setting knob is hard to turn.	Wrong lubrication or lack of lubrication.	Replace instrument.
Inner reference marker fails to move when setting knob is rotated.	Out of engagement.	Replace instrument.
Setting knob set screw loose or missing.	Not tight when altimeter was reset.	Tighten instrument screw, if loose. Replace instrument, if screw is missing.
Cracked or loose cover glass.	Case gasket hardened.	Replace instrument.
Dull or discolored markings.	Age.	
Barometric scale and reference markers out of synchronism.	Slippage of mating parts.	Replace instrument.
Barometric scale and reference markers out of synchronism with pointers.	Drift in mechanism.	Reset pointers per the latest revision of AC 43.13-1.

TABLE X-IV. RATE OF CLIMB INDICATOR

Trouble	Cause	Remedy
Pointer does not set on zero.	Aging of diaphragm.	Reset pointer to zero by means of setting screw. Tap instrument while resetting.
Pointer fails to respond.	Obstruction in static line.	Disconnect all instruments connected to the static line. Clear line. Check individual instruments for obstruction in lines.
Pointer oscillates.	Leaks in static lines.	Disconnect all instruments connected to the static line. Check individual instruments for leaks. Reconnect instruments to static line and test installation for leaks.
	Defective mechanism.	Replace instrument.
Rate of climb indicates when aircraft is banked.	Water in static line.	Disconnect static lines and blow out lines from cockpit out to pitot head.
Pointer has to be set before every flight.	Temperature compensator inoperative.	Replace instrument.
Pointer cannot be reset to zero.	Diaphragm distorted.	Replace instrument.
Instrument reads very low during climb or descent.	Case of instrument broken or leaking.	Replace instrument.

TABLE X-V. MAGNETIC COMPASS

Trouble	Cause	Remedy
Excessive card error.	Compass not properly compensated.	Compensate instrument.
	External magnetic interference.	Locate magnetic interference and eliminate if possible.
Excessive card oscillation.	Insufficient liquid.	Replace instrument.
Card sluggish.	Weak card magnet.	Replace instrument.
	Excessive pivot friction or broken jewel.	Replace instrument.
Liquid leakage.	Loose bezel screws.	Replace instrument.
	Broken cover glass.	Replace instrument.
	Defective sealing gaskets.	Replace instrument.
Discolored markings.	Age.	Replace instrument.
Defective light.	Burned out lamp or broken circuit.	Check lamp or continuity of wiring.
Card sticks.	Altitude compensating diaphragm collapsed.	Replace instrument.
Card does not move when compensating screws are turned.	The gears that turn compensating magnets are stripped.	Replace instrument.

TABLE X-VI. PNEUMATIC SYSTEM PRESSURE GAUGE

Trouble	Cause	Remedy
No indication on pressure gauge.	Disconnected, broken or restricted lines.	Locate trouble and correct.
	Faulty gauge. Malfunctioning pressure regulator.	Replace gauge. Check operation of pressure regulator.
Low pressure indication.	Pressure regulator valve incorrectly adjusted. System leakage.	Adjust pressure regulator. Check compressor bleed valve, fittings and lines.
High pressure indication.	Pressure regulator valve incorrectly adjusted.	Adjust pressure regulator.

TABLE X-VII. ENGINE OIL PRESSURE GAUGE (WET DIRECT READING AND ELECTRIC)

Trouble	Cause	Remedy
Excessive error at zero.	Pointer loose on shaft.	Replace instrument.
	Over-pressure or seasoning of bourdon tube.	
Excessive scale.	Improper calibration adjustment.	Replace instrument
Sluggish operation or pointer or pressure fails to build up	Engine relief valve open.	Check and clean
	Defective instrument.	Replace instrument.
WET DIRECT READING ONLY		
Excessive pointer oscillation.	Improper damping or rough engine relief valve.	Disconnect line and drain. Check for leaks. If trouble persists, clean and adjust relief valve.

TABLE X-VIII. FUEL PRESSURE GAUGE (WET DIRECT READING AND ELECTRIC)

Trouble	Cause	Remedy
No fuel pressure indication.	Defective fuel boost pump.	Check for fuel flow at fire wall shutoff valve.
	Defective gauge.	Replace gauge.
WET DIRECT READING ONLY		
Needle fluctuation.	Air in line.	Purge line of air and re-tighten.

TABLE X-IX. ATTITUDE GYRO (ELECTRIC)

Trouble	Cause	Remedy
Bar fails to respond.	No electrical circuit.	Check circuit breaker. Check voltage at instrument.
	Defective mechanism.	Replace instrument.
Bar does not settle.	Excessive vibration.	Check shock mounts. Replace if necessary.
	Defective instrument.	Replace instrument.
Bar oscillates or shimmies continuously.	Excessive vibration.	Check shock mounts. Replace if necessary.
	Defective mechanism.	Replace instrument.

TABLE X-X. DIRECTIONAL GYRO (ELECTRIC)

Trouble	Cause	Remedy
Instrument fails to respond.	No electrical circuit.	Check circuit breaker and wiring. Check voltage at instrument.
Excessive drift in either direction.	Excessive vibration.	Check shock mounts.
	Defective instrument.	Replace instrument.
Dial spins continuously.	Defective mechanism.	Replace instrument.

TABLE X-XI. TURN AND BANK INDICATOR

Trouble	Cause	Remedy
Turn indicator fails to respond.	Foreign matter lodged in instrument.	Replace instrument.
	No electrical circuit.	Check for voltage at instrument.
Incorrect sensitivity.	Misadjustment of sensitivity spring.	Adjust by means of sensitivity spring screw. If this pulls the pointer from zero, replace instrument.
Turn indicator does not set on zero.	Gimbal and rotor assembly out of balance.	Replace instrument.
	Pointer incorrectly set on its staff.	Replace instrument.
	Sensitivity adjustment pulls pointer off zero.	Replace instrument.
Vibrating turn indicator.	Gimbal and rotor assembly out of balance.	Replace instrument.
	Pitted or worn pivots or bearings.	Replace instrument.
Ball sticks.	Flat spot on ball.	Replace instrument.
Turn indicator fails to respond.	Insufficient vacuum.	Check filter and replace if necessary. Check for leaks or plugged ejector.
Turn and bank indicator cover glass broken.	Positive pressure in vacuum system.	Check for plugged ejector and refer to paragraph 10-62.
Turn indicator will not indicate proper turn rate.	Regulator incorrectly adjusted.	Check adjustment.
	Faulty gyro.	Replace gyro.

TABLE X-XII. AIR TEMPERATURE GAUGE

Trouble	Cause	Remedy
Gauge inoperative.	Poor electrical connection.	Check connections and tighten.
Incorrect reading.	Defective temperature bulb.	Replace bulb.
	Instrument out of calibration.	Replace instrument.

TABLE X-XIII. VOLTMETER

Trouble	Cause	Remedy
Meter inoperative or erratic.	Poor electrical connections.	Check connections and tighten.
	Defective instrument.	Replace instrument.
Meter does not indicate properly.	Meter out of calibration.	Replace with a calibrated meter.

TABLE X-XIV. FUEL QUANTITY GAUGE

Trouble	Cause	Remedy
Fuel gauge fails to indicate.	Broken wiring.	Check and repair.
	Defective gauge.	Replace gauge.
Gauge indicates incorrectly.	Gauge not calibrated properly.	Calibrate gauge. Refer to Section IX.

TABLE X-XV. FUEL FLOW GAUGE

Trouble	Cause	Remedy
Gauge inoperative or erratic.	Defective electrical circuit.	Check circuit breaker and wiring.
	Faulty electrical connections.	Check connections and tighten.
	Defective instrument.	Replace instrument.
Gauge fluctuates.	Defective transmitter.	Replace transmitter.
	Worn or defective fuel control unit drive.	Replace fuel control unit and/or drive.

TABLE X-XVI. OIL TEMPERATURE GAUGE

Trouble	Cause	Remedy
Instrument fails to show any reading.	Faulty electrical connection.	Check wiring to instrument and tighten connections.
	Defective temperature bulb.	Replace bulb.
Excessive scale error.	Improper calibration adjustment.	Replace instrument.

TABLE X-XVII. ENGINE TORQUE GAUGE

Trouble	Cause	Remedy
Gauge inoperative or erratic.	Defective electrical circuit.	Check circuit breaker and wiring.
	Faulty electrical connections.	Check connections and tighten
	Defective pressure transmitter.	Replace transmitter.
	Defective gauge.	Check transmitter resistance*. then replace gauge
Gauge out of calibration.	Pressure transmitter not adjusted correctly.	Calibrate pressure transmitter. (Refer to Section VIII or VIIIA.)
Gauge fluctuates.	Propeller governor not adjusted correctly.	Adjust. (Refer to Section VIII or VIIIA.)
	Propeller feedback ring or low pitch stop rods binding.	Check feedback ring for run out and rods for free travel.
Gauges read low.	Engine torquemeter system defective.	If engine torquemeter system is verified defective, return power section to overhaul facility.

*Early Bendix P N 489 410 pins A to C should read about 19 ohms. D.C., and any pair of A, B, and D should read about 6 ohms. D.C.

Later Bendix P N 489 442 has a primary winding between A and B and two secondary windings between A and C or A and D ... primary impedance is 85 ohms at 400 hz (roughly 45 ohms D.C.), and secondary impedance is 1700 ohms at 400 hz (roughly 750 ohms D.C.) ... most ohmmeters read D.C ohms.

TABLE X-XVIII. INTER-TURBINE TEMPERATURE GAUGE

Trouble	Cause	Remedy
Gauge inoperative.	Faulty connections.	Check connections and tighten.
	Defective gauge.	Replace gauge.
Gauge does not indicate properly.	Temperature system defective.	Check thermocouples, harness and bus-bar. Repair or replace faulty units.
	Gauge not properly calibrated.	Replace with a calibrated unit.

TABLE X-XIX. TACHOMETER (PROPELLER)

Trouble	Cause	Remedy
Tachometer inoperative or erratic.	Defective indicator or tachometer generator.	Replace indicator or tachometer generator.
	Loose connection, open or grounded circuit.	Check continuity of wires. Replace defective wires.
	Defective tachometer generator drive mechanism.	Replace drive mechanism.

TABLE X-XX. ENGINE HOUR RECORDER

Trouble	Cause	Remedy
Meter inoperative.	Defective electrical circuit.	Check connections and wiring.
	Defective pressure switch.	Replace switch.
	Defective meter.	Replace meter.

TABLE X-XXI. ANNUNCIATOR DISPLAY

Trouble	Cause	Remedy
Annunciator display inoperative.	No power to instrument.	Check circuit breaker and wiring connections.
	Defective sensor unit.	Check voltage at Pin 17 at instrument connection, if none replace sensor unit.
False indication on an individual annunciator function.	Grounded circuit.	Check individual sensor for continuity to ground, if grounded replace sensor.
Individual annunciator functions do not indicate a malfunction on the annunciator display.	Defective sensor.	Replace sensor.
	Defective light bulb.	Replace bulb.
Warning horn inoperative.	Faulty electrical connection.	Check connections and tighten.
	Defective horn.	Replace horn.

3G10 THRU 3L24

INTENTIONALLY LEFT BLANK

Cheyenne

AIRPLANE

SERVICE MANUAL

CARD 4 OF 8

PA-31T CHEYENNE

PA-31T CHEYENNE II

PA-31T1 CHEYENNE I

PA-31T1 CHEYENNE IA

PA-31T2 CHEYENNE II XL

PIPER AIRCRAFT CORPORATION

PART NUMBER 753 826

4A1

JULY 2, 1984
INTERIM REVISION: OCTOBER 15, 1997

SERIAL NUMBER INFORMATION

PA-31T, CHEYENNE

Serial Numbers 31T-7400002 to 31T-7720069 inclusive.

PA-31T, CHEYENNE II

Serial Numbers 31T-7820001 to 31T-8120104 inclusive.

PA-31T1, CHEYENNE I

Serial Numbers 31T-7804001 to 31T-8104101 inclusive.

PA-31T1, CHEYENNE IA

Serial Numbers 31T-8304001 to 31T-8304003 inclusive;
(then, serial number series changed to)
Serial Numbers 31T-1104004 to 1104017 inclusive.

PA-31T2, CHEYENNE II XL

Serial Numbers 31T-8166001 to 31T-8166076 inclusive;
(then, serial number series changed to)
Serial Numbers 31T-1166001 to 1166008 inclusive.

AEROFICHE EXPLANATION AND REVISION STATUS

Service manual information incorporated in this set of Aerofiche cards has been arranged in accordance with general specifications of Aerofiche adopted by General Aviation Manufacturer's Association, (GAMA).

Information compiled in this Aerofiche Service Manual will be kept current by revisions distributed periodically. These revisions supersede all previous revisions and are complete Aerofiche card replacements and supersede Aerofiche cards of same number in set.

Conversion of Aerofiche alpha/numeric code numbers:
First number is Aerofiche card number.
Letter is horizontal line reference per card.
Second number is vertical line reference per card.
Example. 2J16 Aerofiche card number two of given set, Grid location J16.

To aid in locating the various chapters and related service information desired, the following is provided:

1. At the beginning of Aerofiche Card No. 1:
   a. A complete Section Index for all fiche in this set.
   b. A complete list of Illustrations for all fiche in this set.
   c. A complete list of Tables for all fiche in this set.
   d. A complete list of Charts for all fiche in this set.
2. At the beginning of each subsequent Aerofiche Card:
   a. A complete Section Index for all fiche in this set.
   b. A complete list of Illustrations for that fiche only.
   c. A complete list of Tables for that fiche only.
   d. A complete list of Charts for that fiche only.
3. A complete Table of Contents showing paragraph titles and appropriate grid location numbers is given at the beginning of each Section relating to the information within that Section.
4. Identification of revised material:
   Revised text and illustrations are indicated by a black vertical line along the left-hand margin of the frame, opposite revised, added or deleted material. Revision lines indicate only current revisions with changes and additions to or deletions of existing text and illustrations. Changes in capitalization, spelling, punctuation, indexing, physical location of material, or complete page additions are not identified by revision lines

AEROFICHE EXPLANATION AND REVISION STATUS (cont)

5. Revisions to Service Manual 753 826 issued December 1973 are as follows:

Revision	Publication Date	Aerofiche Card Effectivity
ORG731208	December 8, 1973	
CR810206	February 6, 1981	1, 2, 3, 4, 5, 6, 7 and 8
PR810923	September 23, 1981	1, 2, 3, 4, 5, 6, 7 and 8
PR810925	September 25, 1981	1 Only
PR820215	February 15, 1982	1, 2, 3, 4, 5, 6, 7 and 8
PR821015	October 15, 1982	1, 2, 3, 4, 5, 6, 7 and 8
PR830425	April 25, 1983	1, 2, 3, 4, 5, 6, 7 and 8
PR840105	January 5, 1984	1, 2, 3, 4, 5, 6, 7 and 8
PR840323	March 23, 1984	1, 2, 3, 4, 5, 6, 7 and 8
PR840702	July 2, 1984	1, 2, 3, 4, 5, 6, 7 and 8
IR860220	February 20, 1986	3
IR860430	April 30, 1986	3
IR860821	August 21, 1986	1
IR871009	June 15, 1988	2
IR900313	March 13, 1990	1
IR941019	October 19, 1994	1 and 2
IR950320	March 20, 1995	1
IR971015 *	October 15, 1997	1, 2, 3, 4, 5, 6, 7 and 8

*** INTERIM REVISION TO SERVICE MANUAL 753-826**

Revisions appear in all eight Aerofiche cards. Discard your entire existing Aerofiche card set (Cards 1 - 8) and replace it with the revised Aerofiche card set (Cards 1 - 8) dated 10/15/97.

Consult the Customer Service Information Catalog Aerofiche (P/N 1753-755) for current revision dates for this manual.

SECTION INDEX

SECTION	AEROFICHE CARD NO. 1	GRID NO.
I	INTRODUCTION	1A19
II	HANDLING AND SERVICING	1A22
III	INSPECTION	1D23
IV	STRUCTURES	1E13
V	SURFACE CONTROLS	1I8
	AEROFICHE CARD NO. 2	
VI	HYDRAULIC SYSTEM	2A10
VII	LANDING GEAR AND BRAKE SYSTEM	2D19
VIII	POWER PLANT (PA-31T AND PA-31T1)	2I11
	AEROFICHE CARD NO. 3	
VIIIA	POWER PLANT (PA-31T2)	3A8
IX	FUEL SYSTEM	3D7
X	INSTRUMENTS	3F2
	AEROFICHE CARD NO. 4	
XI	ELECTRICAL SYSTEM	4A7
	AEROFICHE CARD NO. 5	
XII	ELECTRONICS	5A9
XIII	ENVIRONMENTAL CONTROL SYSTEM (PA-31T AND PA-31T1)	5B1
	AEROFICHE CARD NO. 6	
XIIIA	ENVIRONMENTAL CONTROL SYSTEM (PA-31T2)	6A8
XIV	ACCESSORIES AND UTILITIES	6C1
	AEROFICHE CARD NO. 7	
XV	ELECTRICAL SCHEMATICS (PA-31T AND PA-31T1)	7A5
	AEROFICHE CARD NO. 8	
XVA	ELECTRICAL SCHEMATICS (PA-31T2)	8A5

LIST OF ILLUSTRATIONS

Figure		Aerofiche Grid No.
11-1.	Switch and Circuit Breaker Panels	4A16
11-2.	Exploded View of D.C. Starter-Generator	4A19
11-3.	Correct Position of Brushes and Springs	4B1
11-4.	Electrical Connections of Starter-Generator	4B1
11-5.	Paralleling Voltage Chart	4B2
11-5a.	Position of Auxilec Tool for Blowing Out Carbon Dust From Auxilec Starter-Generator	4B8
11-6.	Starter-Generator (Auxilec, Inc.)	4B12
11-7.	Brush Shunts Positioning	4B13
11-8.	Dimension Check of Shaft Drive Sinking	4B14
11-9.	Locating Washer	4B14
11-10.	Locating Drive Shaft	4B14
11-11.	Brush Running in Diagram	4B16
11-1 la.	Autostart Electrical Float Diagram	4B22
11-12.	Cell Layout-Nickel Cadmium Battery	4C5
11-13.	Patch Harness	4C8
11-14.	Wiring Diagram Pre-Closed Loop Test	4C9
11-15.	Wiring Diagram Automatic Line Contactor Test	4C9
11-15a.	Electro Delta Wiring Diagram	4C11
11-16.	Wiring Diagram Test of Overvoltage Relay	4C15
11-17.	Landing and Taxi Lights	4C15
11-18.	Wing Inspection Light	4C21
11-18a.	Logo Light Assembly Adjustments	4D3
11-19.	Door-Ajar Switch	4D4
11-20.	Stability Augmentation System Layout Diagram	4D13
11-21.	S.A.S. Servo Motor	4D17
11-22.	S.A.S. Computer	4D19
11-23.	S.A.S. Angle of Attack Vane with Check Equipment Installed	4D22
11-24.	S.A.S. Stall Warning Margin Indicator	4D23
11-25.	S.A.S. Stability Augmentator Emergency Override System	4E5
11-25a	A.O.A. Sensor Schematic	4E9
11-26.	Wing Flap Switch	4E18
11-27.	Safety Switch Function	4E18
11-28.	Basic Aircraft Electrical Bus Systems (Early Models) (Typical)	4E20
11-29.	Basic Aircraft Electrical Bus Systems (PA-31T S/N 31T-8120001 and up and PA-31T1 S/N 31T-8104001 and up) (Typical)	4E21
11-30.	Basic Aircraft Electrical Bus Systems (PA-31T2 S/N 31T-8166001 and up) (Typical)	4E22
11-31.	Component Location, Relay Shelf and Electrical Accessory Shelf (Early Models)	4E23
11-32.	Component Location, Relay Shelf and Electrical Accessory Shelf (PA-31T S/N 31T-8120001 and up and PA-31T1 S/N 31T-8104001 and up)	4E24
11-33.	Component Location, Relay Shelf and Electrical Accessory Shelf (PA-31T2 S/N 31T-8166001 and up)	4F1
11-34	Forward Electrical Panel Locations, Cheyenne IA	4F2

LIST OF TABLES

Table		Aerofiche Grid No.
XI-I.	New Lightweight Wire Vs. Old Wire	4A13
XI-Ia.	Wire Resistance U.S. Length	4A16
XI-Ib.	Starter-Generator Test Specifications (Lear-Siegler)	4A21
XI-II.	Inspection of Components	4A22
XI-III.	Starter-Generator Test Specifications	4B5
XI-IV.	Troubleshooting Chart (Starter-Generator)	4B12
XI-V.	Troubleshooting Chart (Electrical System)	4E10
XI-VI.	Circuit Load Chart	4E14
XI-VII.	Lamp Replacement Guide	4E17

LIST OF CHARTS

Chart		Aerofiche Grid No.
11-1.	S.A. S. Angle Relationships	4E8

SECTION XI
ELECTRICAL SYSTEM

Paragraph		Aerofiche Grid No.
11-1.	Introduction	4A13
11-2	Description	4A13
11-2a.	Cheyenne IA and IIXL Light Weight Wiring	4A13
11-3	Troubleshooting	4A14
	11-3a. Finding Bad Electrical Connections and Poor Ground Bonding	4A15
	11-3b Maintenance of Electrical Contacts (Pins and Sockets)	4A17
11-4.	Starter-Generator System (Lear-Siegler, Inc.)	4A18
	11-5. Description and Operation	4A18
	11-6. Checking Starter-Generator System	4A18
	11-7. Adjustments	4A20
	11-8. Starter-Generator Service Test Specifications	4A20
	11-9. Overhaul	4A20
	11-10. Disassembly	4A20
	11-11 Cleaning	4A21
	11-12. Inspection	4A21
	11-13 Repair and Replacement	4A24
	11-14 Reassembly	4B2
11-15	Starter-Generator System (Auxilec, Inc.)	4B3
	11-16 Description and Operation	4B3
	11-17. Checking Starter-Generator System	4B3
	11-18 Adjusments	4B4
	11-19 Starter-Generator Service Test Specifications	4B5
	11-20. Overhaul	4B5
	11-21 Disassembly	4B5
	11-22 Cleaning	4B7
	11-22a Removing Carbon Dust From Auxilec Starter-Generator	4B7
	11-23. Inspection Checks	4B9
	11-24 Reassembly	4B10
	11-25. Brush Running In	4B15
	11-26 Fits and Clearances	4B18
	11-27 Inspection and Testing of Components	4B18
11-27a	Starter-Generator System (Auxilec 8012C1: Autostart) (PA-31T1 S/N's 31T-8304001 to 31T-8304003, and 31T-1104004 and up; PA-31T2 S/N's S/N's 31T-1166001 and up)	4B19
	11-27b Description and Operation	4B19
	11-27c Starter-Generator Operation and Field Weakening	4B21
	11-27d Adjustments to Autostart Electrical Systems	4B24
11-28.	Battery	4C2
	11-29. Removal of Battery	4C3
	11-30. Installation of Battery	4C3
	11-31 Testing Battery Temperature Sensor	4C3

Revised: 7/2/84

Paragraph		Aerofiche Grid No.
	11-32 Starting Through External Power	4C3
	11-33. Auto Ignition (Optional)	4C4
	11-34. Description of Operation	4C4
	11-35. Removal of the Ground Start Relays	4C4
	11-36. Installation of the Ground Start Relays	4C4
11-37.	DC Control Panel	4C6
	11-38. Description and Operation	4C6
	11-39. Checking DC Control Panel	4C6
	11-40. Adjusting DC Control Panel	4C6
	11-41. DC Control Panel Reverse Current Test	4C8
	11-42. Removal of DC Control Panel	4C9
	~~11-43. Bench Test of DC Control Panel (Lear-Seigler)~~	~~4C10~~
	11-43a. Bench Test of DC Control Panel (Electro Delta)	4C11
	11-44. Installation of DC Control Panel	4C12
11-44a.	Bus Feeder Check (31T-8120001 and up; 31T-8104001 and up; and 31T-8166001 and up)	4C13
	11-44b. Testing for Open Diodes	4C13
	11-44c. Test for Shorted Diodes	4C13
11-45	Overvoltage Control	4C14
	11-46. Purpose and Operation	4C14
	11-47. Overvoltage Relay Operational Check	4C14
	11-48. Removal of Overvoltage Relay	4C14
	11-49. Bench Test of Overvoltage Relay	4C15
	11-50. Installation of Overvoltage Relay	4C15
11-51	Overload Sensor	4C15
	11-52. Description of Overload Sensor	4C15
	11-53. Removal of Overload Sensor	4C16
	11-54. Installation of Overload Sensor	3C16
11-55.	Electrical Switches and Circuit Breakers	4C16
	11-56. Description of Overhead Switches	4C16
	11-57. Removal of Overhead Switches	4C16
	11-58. Installation of Overhead Switches	4C17
	11-59 Description of Circuit Breaker and Switch Panel	4C17
	11-60. Removal of Circuit Breakers (Wired Type)	4C17
	11-61. Installation of Circuit Breakers (Wired Type)	4C18
	11-62. Removal and Installation of Plug-In Circuit Breakers	4C18
	11-63. Removal and Installation of Toggle Switches	4C18
11-64.	Oil Cooler System	4C18
	11-65 Description	4C18
	11-66 Removal of Oil Cooler Door Indicator Lights	4C18
	11-67 Installation of Oil Cooler Door Indicator Lights	4C19
11-68	Deicer System	4C19
	11-69. Description and Operation	4C19
	11-70. Removal of Deicer Control Relays	4C19
	11-71. Installation of Power Control Relay	4C19
	11-72. Installation of Motor Control Relay	4C20
	11-73. Removal of Deicer Timer	4C20
	11-74. Installation of Deicer Timer	4C20
11-75	Landing and Taxi and Wing Ice Inspection Lights	4C20
	11-76. Description	4C20

Paragraph			Aerofiche Grid No.
	11-77	Removal of Landing and Taxi Light	4C20
	11-78	Adjustment	4C20
	11-79.	Installation of Landing and Taxi Light	4C22
	11-80.	Removal of the Wing Ice Inspection Light	4C22
	11-81.	Installation of the Wing Ice Inspection Light	4C22
11-82.	Position Lights		4C22
	11-83.	Description	4C22
	11-84.	Removal of Wing Position Lights	4C23
	11-85.	Installation of Wing Position Lights	4C23
	11-86.	Removal of Tail Position Light	4C23
	11-87.	Installation of Tail Position Light	4C23
11-88	Strobe Lights		4C23
	11-89.	Description	4C23
	11-90.	Removal of Wing Tip Strobe Light	4C23
	11-91.	Installation of Wing Tip Strobe Light	4C23
	11-92	Removal of Tail Strobe Light	4C24
	11-93.	Installation of Tail Strobe Light	4C24
	11-94	Removal of Wing Tip Strobe Power Supply	4C24
	11-95.	Installation of Strobe Wing Tip Power Supply	4C24
	11-96.	Removal of Tail Strobe Power Supply	4C24
	11-97.	Installation of Tail Strobe Power Supply	4C24
	11-98	Removal of Tip Tank Recognition Light	4C24
	11-99.	Troubleshooting	4D1
	11-100.	Wing Strobe and Position Lights	4D2
	11-101.	Removal of Wing Strobe and Position Light Assemblies	4D2
	11-102.	Installation of Wing Strobe and Position Light Asseblies	4D2
11-102a	Logo Lights		4D3
	11-102b	Logo Lamp Replacement	4D3
	11-102c.	Logo Lights Adjustment	4D3
11-103.	Door Ajar Switches		4D4
	11-104	Description	4D4
	11-105	Removal of Door Ajar Switches	4D4
	11-106.	Installation of Door Ajar Switches	4D5
	11-107	Adjustment of Door Ajar Switches	4D5
11-108.	Interior Lights		4D5
	11-109.	Removal of Dome Lights	4D5
	11-110.	Installation of Dome Light	4D5
	11-111	Removal of Overhead Reading Lights	4D5
	11-112	Installation of Overhead Reading Lights	4D6
11-113.	Courtesy Lights (On Time Delay)		4D6
	11-114	Description of Operation	4D6
	11-115	Removal of the Time Delay Timer	4D6
	11-116	Installation of the Time Delay Timer	4D6
11-117.	Instrument Lights		4D6
	11-118	Description of Operation for the Solid State Dimmer Assembly (Earlier Models)	4D6
	11-119.	Description of Operation for the Solid State Dimmer Assembly (Later Models)	4D7
	11-120	Removal of Solid State Dimmers (Earlier Models)	4D7
	11-121.	Installation of Solid State Dimmers (Earlier Models)	4D7
	11-122	Removal of Solid State Dimmer (Later Models)	4D8

Paragraph		Aerofiche Grid No.

11-123	Installation of Solid State Dimmers (Later Models)	4D8
11-124.	Removal of Dimmer Slide Controls (Later Models)	4D8
11-125.	Installation of Dimmer Slide Controls (Later Models)	4D8
11-126.	Adjustment of Solid State Dimmer (Later Models)	4D8
11-127.	Removal of Power Supply for Electroluminescent Panels	4D8
11-128.	Installation of Power Supply for Electroluminescent Panels	4D9
11-129.	Troubleshooting Procedure for the Solid State Dimmer Assemblies	4D9
11-130.	Annunciator Panel	4D9
11-131	Annunciator Controller	4D9
11-132.	Description of Operation	4D9
11-133.	Removal of Annunciator Controller	4D9
11-134.	Installation of Annunciator Controller	4D9
11-135.	Annunciator Panel Lamp Replacement	4D10
11-136.	Annunciator Panel (Oil Temperature Indicator) Adjustment Procedure	4D10
11-137	No Smoking Fasten Seat Belt Annunciator	4D11
11-138.	No Smoking Fasten Seat Belt Annunciator Lamp Replacement	4D11
11-139.	Chimes, No Smoking, Fasten Seat Belt Annunciator	4D11
11-140.	Purpose	4D11
11-141.	Removal of the Chimes Assembly	4D11
11-142	Installation of the Chimes Assembly	4D11
11-143.	Stall Warning System	4D12
11-144.	Description and Operation	4D12
11-145.	Removal of Lift Detector	4D12
11-146	Installation of Lift Detector	4D12
11-147	Adjustment of Lift Detector	4D12
11-148	Stability Augmentation System	4D14
11-149.	Description of Stability Augmentation System	4D14
11-150	Removal of Computer	4D14
11-151.	Installation of Computer	4D14
11-152.	Removal of Angle of Attack Sensor Vane	4D15
11-153	Installation of Angle of Attack Sensor Vane	4D15
11-154.	Removal of Stall Margin Indicator	4D15
11-155.	Installation of Stall Margin Indicator	4D15
11-156	Removal of Servo Motor	4D15
11-157.	Installation of Servo Motor	4D16
11-158.	Removal of Test Switch	4D16
11-159	Installation of Test Switch	4D16
11-160.	Removal of SAS Warning Lights	4D16
11-161	Installationof SAS Warning Lights	4D17
11-167	Removal of Stall Warning Lights	4D18
11-163.	Installation of Stall Warning Light	4D18
11-164.	Removal of Stall Warning Flasher	4D18
11-165.	Installation of Stall Warning Flasher	4D18
11-166.	Removal of Stall Warning Horn	4D18
11-162	Installation of Stall Warning Horn	4D20
11-168.	Piper Stability Augmentation System Calibration Procedure	4D20
11-169.	SAS in Flight Check	4E1
11-170.	SAS Post Flight Check	4E2
11-171.	SAS Calibration Procedure Summary	4E3

Paragraph		Aerofiche Grid No
11-172	Stability Augmentator Emergency Override System	4E4
11-173	A O A Sensor Vane Potentiometer and Heater Element Checks	4E6
11-174.	Replacement of Elevator SAS Down Spring	4E7

NOTE

Serial Number Identification History for the PA-31T, PA-31T1 and PA-31T2 is located on Grid 4A3.

THIS PAGE INTENTIONALLY LEFT BLANK

11-1. INTRODUCTION. This section contains information to assist in servicing the electrical power distribution systems and components Electrical schematics are found in Chapters 7 and 8.

11-2 DESCRIPTION The electrical system is 28 V.D.C., negative ground, powered by a nickel cadmium battery and two 6-kilowatt starter generators. External power provisions satisy ground operational requirements

Typical power distribution system diagrams of each model are provided in Figures: 11-28, 11-29 and 11-30. All are of split-bus design, with individual circuit protection and separate pilot accessible bus-tie circuit breakers, including diode protection, providing operational flexibility during single engine or single alternator operation.

Shelf mounted accessory relay panels centralize these functions for efficient service. All electrical power distribution switches and circuit breakers are within reach of the pilot within the cockpit environment

All Lighting is 24 V D.C. powered, except for high voltage anti-collision strobes and 400 Hertz A.C powered electroluminescent (E.L.) panels and placard lighting. The strobe power supplies and E.L. inverter are sourced from 28 V D C. aircraft bus power. For switch and circuit breaker panels refer to Figure 11-1

11-2a CHEYENNE IA AND CHEYENNE II XL LIGHTWEIGHT WIRING (MIL-W-81044 9-). This new wiring has a higher temperature resistance, thinner diameter and greater resistance to chafing. The new wiring also allows the use of heat shrink type covering.

The new wiring may be used in place of the old type, but the older type should not be used to replace the newer type

TABLE XI-1 NEW LIGHTWEIGHT WIRE VS. OLD WIRE

SINGLE CONDUCTOR WIRE

LIGHTWEIGHT WIRE			OLD WIRE		
CONDUCTOR SIZE (AWG)	PIPER CODE NUMBER	DESCRIPTION	CONDUCTOR SIZE (AWG)	PIPER CODE NUMBER	DESCRIPTION
24	153 066[illegible]	24-9	24	153 063[illegible]	MIL-W-16878D Ty BN AN24
22	153 049[illegible]	22-9	22	153 015[illegible]	MIL-W-5086 Ty 7 AN22
22	153 507[illegible]	22-0			
22	153 521[illegible]	22-2			
20	153 045[illegible]	20-9	20	153 013[illegible]	MIL-W-5086 Ty 7 AN20
20	153 504[illegible]	20-0	20	153 055[illegible]	MIL-W-5086 Ty 7 AN20
20	153 505[illegible]	20-2	20	153 051[illegible]	MIL-W-5086 Ty 7 AN20
20	153 506[illegible]	20-92	20	153 050[illegible]	MIL-W-5086 Ty 7 AN20
18	153 044[illegible]	MIL-W-81044 9- 18-9	18	153 012[illegible]	MIL-W-5086 Ty 7 AN18
18	153 503[illegible]	18-0	18	153 033[illegible]	MIL-W-5086 Ty 7 AN18
18	153 502[illegible]	18-2	18	153 034[illegible]	MIL-W-5086 Ty 7 AN18
16	153 043[illegible]	16-9	16	153 010[illegible]	MIL-W-5086 Ty 7 AN16
16	153 500[illegible]	16-0	16	153 032[illegible]	MIL-W-5086 Ty 7 AN16
16	153 501[illegible]	16-2	16	153 031[illegible]	MIL-W-5086 Ty 7 AN16
14	153 048[illegible]	14-9	14	153 011[illegible]	MIL-W-5086 Ty 7 AN14
12	153 047	12-9	12	153 006	MIL-W-5086 Ty 7 AN12
10	153 046	10-9	10	153 009[illegible]	MIL-W-5086 Ty 2 AN10
8	153 064	8-9	8	153 008[illegible]	MIL-W-5086 Ty 2 AN8
6	153 065	6-9	6	153 007[illegible]	MIL-W-5086 Ty 2 AN6
4	153 068[illegible]	4-9	4	153 005[illegible]	MIL-W-5086 Ty 2 AN4
2	153 067[illegible]	2-9			
0	153 100[illegible]	0-9			

Insulation color 1 = white 2 = black 3 = red 4 = white red

TABLE XI-I NEW LIGHTWEIGHT WIRE VS. OLD WIRE (cont.)

SHIELDED WIRE

LIGHTWEIGHT WIRE MIL-W-81044 12 WITH SHIELDING AND JACKETING PER MIL-C-27500		OLD WIRE MIL-W-5086A, TYPE I WITH SHIELDING AND JACKETING PER MIL-C-7078A TYPE II OR MIL-W-81044 12 WITH SHIELDING AND JACKETING PER MIL-C-27500	
CONDUCTOR SIZE (AWG)	PIPER CODE NUMBER	CONDUCTOR SIZE (AWG)	PIPER CODE NUMBER
12	153 412	12	153 061
14	153 413	14	153 056
16	153 400	16	153 057
18	153 403	18	153 058
20	153 406	20	153 059
22	153 409	22	153 019
24	153 418		
16	153 401		
18	153 404	18	153 119
20	153 407	20	153 120
22	153 410	22	153 125
24	153 419		
16	153 402		
18	153 405		
20	153 408	20	153 121
22	153 411	22	153 126
24	153 420		
20	153 421		

11-3 TROUBLESHOOTING Troubles peculiar to the electrical system are listed in Table XI-V along with their probable cause and suggested remedies. The diagrams located at the end of this section will give a physical breakdown of the different electrical circuits used in the airplane. See Chapter XV for an index to the Electrical Schematics

After the trouble has been corrected, check entire electrical system for security and operation of its components

11-3a. FINDING BAD ELECTRICAL CONNECTIONS AND POOR GROUND BONDING. When an electrical system (like a starter system) just doesn't perform quite right, even after all the obvious things (like rebuilding the starter) have been done, consider the wires and connections of just that system. Hard starting or generators and alternators that won't stay parallel, or other mysterious cases of electrical grief, are often caused by bad electrical connections. These look good, when checked with a volt/ohm meter, but show up bad, when measured in thousandths of an ohm, or milliohms. Therefore, the mechanic needs two things:

1. Equipment to measure resistance in milliohms, within +/-20% accuracy.
2. An ability to judge how many milliohms is too many, to identify trouble.

The average shop already has (or can get) a digital volt meter that will read a 12 volt battery in four significant figures (like "12.62" volts). The only other thing needed, and not already there, is a set of special twin strand test leads (40' of Piper P/N 153 419 wire), and a table of wire resistance values. A picture of the test equipment hook up and a table of resistance values follow. See Figure 24-1 and Chart 2402.

a How to judge:

1. Each connection will usually measure 1 milliohm or less (certainly not more than 3 milliohms; that includes the connection between wire strands and a terminal crimped on to those strands, or between a connection stud and a terminal fastened on to it with washers and nuts.

2 Measure between aircraft battery minus terminal, and engine case or alternator or starter ground, and expect about 3 milliohms or less.

3. 3 milliohms is typical for each length of heavy gauge (bigger around than a pencil) starter or alternator power wire

4. The whole fuselage will probably measure 3 milliohms or less, from end to end.

5 Don't measure through a small fuse. . . the 10 amp test current would blow small fuses (It is practical to turn down the test current to 5 amp and then double the measured voltage, to safely measure a 10 amp fuse circuit.)

6. Nearly every normal resistance over 3 milliohms will be due to the resistance of wire, as shown on the chart Determine the wire gauge (usually shown on Piper electrical schematics) and estimate the length of each wire to be measured. Then, use the resistance table to estimate, within 20%, how many milliohms each wire should measure.

Write down a list of the wires and connections to be measured, followed by how many milliohms are measured. Look at the whole list to see which measurement looks far (50% or more) above what was estimated or expected If the measurement is excessive, there will usually be a loose nut, dirty washer, loose or dirty crimp where terminal was crimped on a wire, or a set of bad switch contacts. A wire could be frayed in the middle, but the trouble will usually be at one end of a wire.

Terminals crimped on the ends of heavy aluminum cables may be really good at one end, and really bad, at the other end. Measure a bad wire from exposed wire strands to the terminal crimped to them. Clean, recrimp, replace, tighten, and rework suspected connections until you can account for at least 2/3 of all the milliohms in each measurement. Then if trouble persists, it is elsewhere.

TABLE XI-Ia. WIRE RESISTANCE

Copper Wire						
Diameter Sol Wire	ft per 100 mΩ	Gauge No	Resistance in Milliohms per Foot (mΩ/ft.) 68°F/20°C	32°F/0°C	122°F/50°C	167 F/75 C
020"	3 9'	24	25 67 mΩ	23 65	28 70	31 22
025"	6 2'	22	16 14	14.87	18.05	19 63
032"	10'	20	10			
040"	16'	18	6 4			
051"	25'	16	4 0			
064"	37'	14	2 5			
080"	63'	12	1 6			
102"	100'	10	1 0			
129"	159'	8	63			
162"	253'	6	40			
204"	403'	4	25			
258"	640'	2	16			
289"	807'	1	12			
325"	1018'	0	098			
365"	1283'	00	078			
Aluminum Wire						
289"	492'	1	20			
365"	782'	00	13 mΩ			

Times Wire and Cable Co. brand RG-58A/U
Coax value:
Center conductor = 12.6 milliohm/foot
Shield = 4.11 milliohm/foot

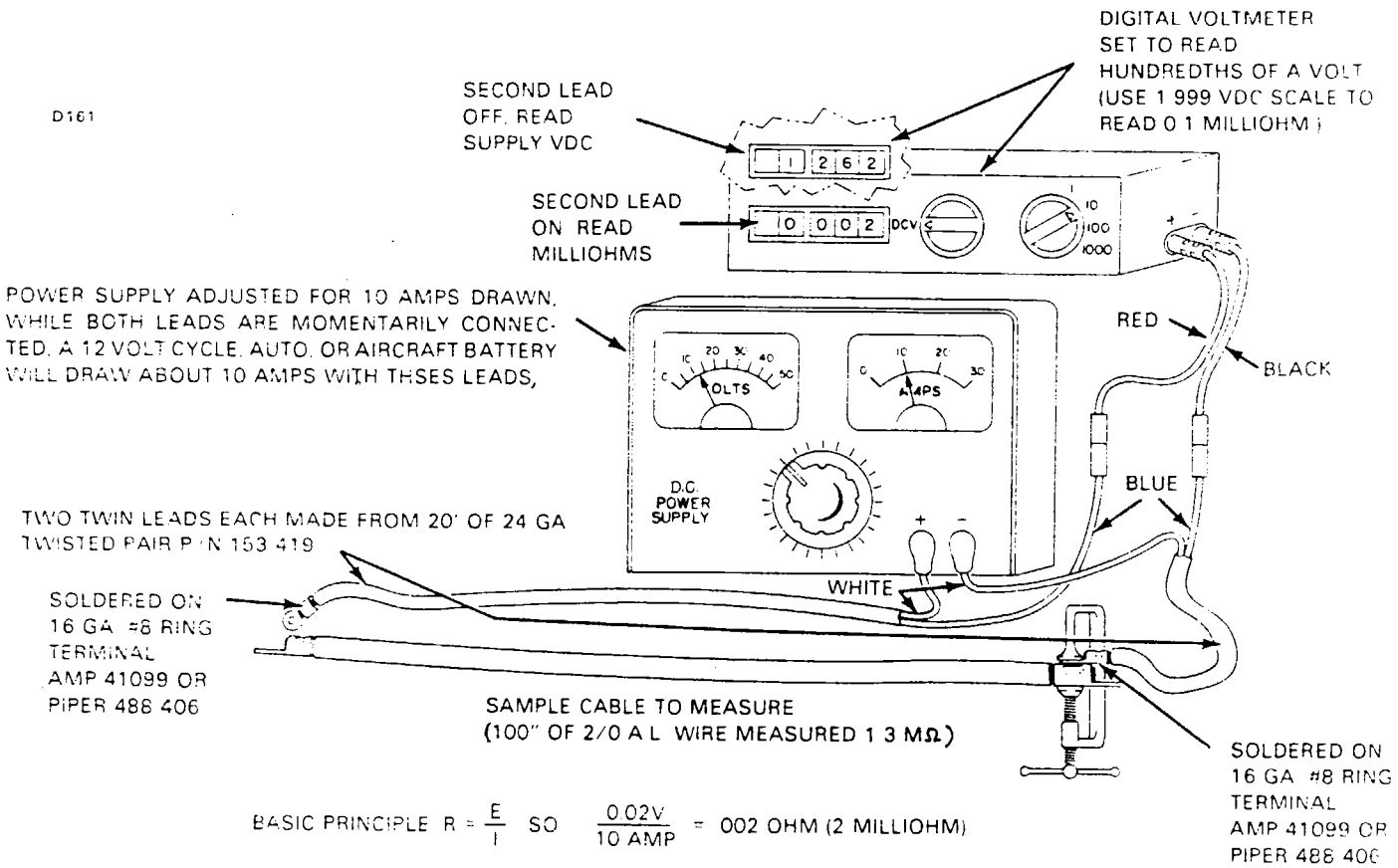

Figure 11-1. Kelvin Low Resistance Bridge

11-3b. MAINTENANCE OF ELECTRICAL CONTACTS (PINS AND SOCKETS). Inspect and treat tin-plated (silver or gray in color) connector terminals as follows:

a. Test each socket in the connector for looseness by using a smooth straight standard .062 inch diameter pin. Keep pin coated with contact lubricant, Piper Part Number 764 657. (Refer to consumable materials list for vendor.)

b. Insert the test pin fully to the bottom of the socket and push to insure the socket is secure in the connector body

c. While removing the test pin from the socket, check for noticeable drag resistance. Replace any loose or bent socket or bent damaged pins. Test the replacement parts as stated in steps "a" thru "c".

d Terminals should be cleaned, if necessary, using a standard connector cleaning solvent, such as freon Insure solvent does not contain silicone. A non-metallic, soft-bristle brush may be used on the terminals. Do not use sandpaper, abrasives etc. Connectors must be blown absolutely dry prior to installation.

e After inspection, replacement and/or cleaning, coat all terminals with contact lubricant, Piper P N 764 657, as follows

1. Shake can before using and repeat as necessary throughout the application process.

2. Apply a very thin mist coating to all connector contacts (both male and female). To avoid excessive coating, hold the spray nozzle 10 to 12 inches from the surfaces to be treated. A single sweep action across the contacts should be sufficient.

NOTE

To familiarize one's self with this procedure, utilize a piece of paper for practice, simulating the surfaces to be treated.

3 Wipe clean any overspray on the airframe or connector body. Do not wipe or touch the contacts after treatment

THIS SPACE INTENTIONALLY LEFT BLANK

11-4 STARTER GENERATOR SYSTEM (LEAR-SIEGLER, INC.).

11-5. DESCRIPTION AND OPERATION. The Starter Generators are located on the aft top side of the engines. The purpose of this unit is to provide torque for engine starting and to generate DC electrical power. When the unit is being utilized as a starter, it may be energized by the aircraft battery or through the use of an external power source

NOTE

The following information is taken from Lear Siegler, Inc. Maintenance Manuals For the most current information, refer to these manuals. See Section II for address, manual and part number.

CAUTION

The selector switch should not be left in the START position any longer than the time required for a normal engine start; otherwise, the unit may be damaged by excessive temperature caused by the large starting currents.

When the unit is being utilized as a generator, it will provide its rated DC output when operated at its rated speeds This generated electrical power is then utilized as required to operate the various electrical systems of the aircraft

This unit incorporates its own cooling system which consists of an air inlet duct, a pressure sensitive check valve in the air inlet duct which regulates direct airflow, and a four bladed fan which is part of the unit Cooling is obtained by routing the outside ram air through the air inlet duct which is then driven through the unit by the four bladed fan.

Each unit is controlled by its own independent three position switch which operates as follows DN for START, UP for GEN with the center position being the OFF position. The switches are located on the over head switch panel (Refer to appropriate POH.) With the Battery Master Switch ON, placing the Right and or Left Starter-Generator Switch in the START position, closes the appropriate starter solenoid for that particular engine Power is then supplied through the master contactor to the field windings of the starter unit creating a strong magnetic field (Refer to the schematics.) At the same time, current flows through the brushes to the commutator and continues through the armature windings to ground. The magnetic field now existing in the armature combines with that existing in the field windings of the starter unit driving the armature as required to start the engine

When the switch is placed in the GEN position, the unit provides rated DC output to the aircraft electrical system through the voltage control panel and the overvoltage control. Placing the switch in the center or OFF position disconnects the unit from the electrical system of the aircraft

11-6 CHECKING STARTER-GENERATOR SYSTEM. The system incorporates two ammeters which provide an independent output check of each generator and a voltmeter which monitors the electrical bus voltage Should either ammeter fail to indicate an output from its associated generator, check the appropriate circuit breaker If the circuit breakers are in their normal operating position, a further check of the system should be accomplished

a Ascertain that the ammeters are operating properly.

b Ascertain that all electrical units are off and battery is fully charged

c. Disconnect electrical lead at terminal stud C+ on Starter-Generator being tested. (L or R.)

d Turn on battery master switch and turn selector switch (L or R) for the unit being tested to the START position

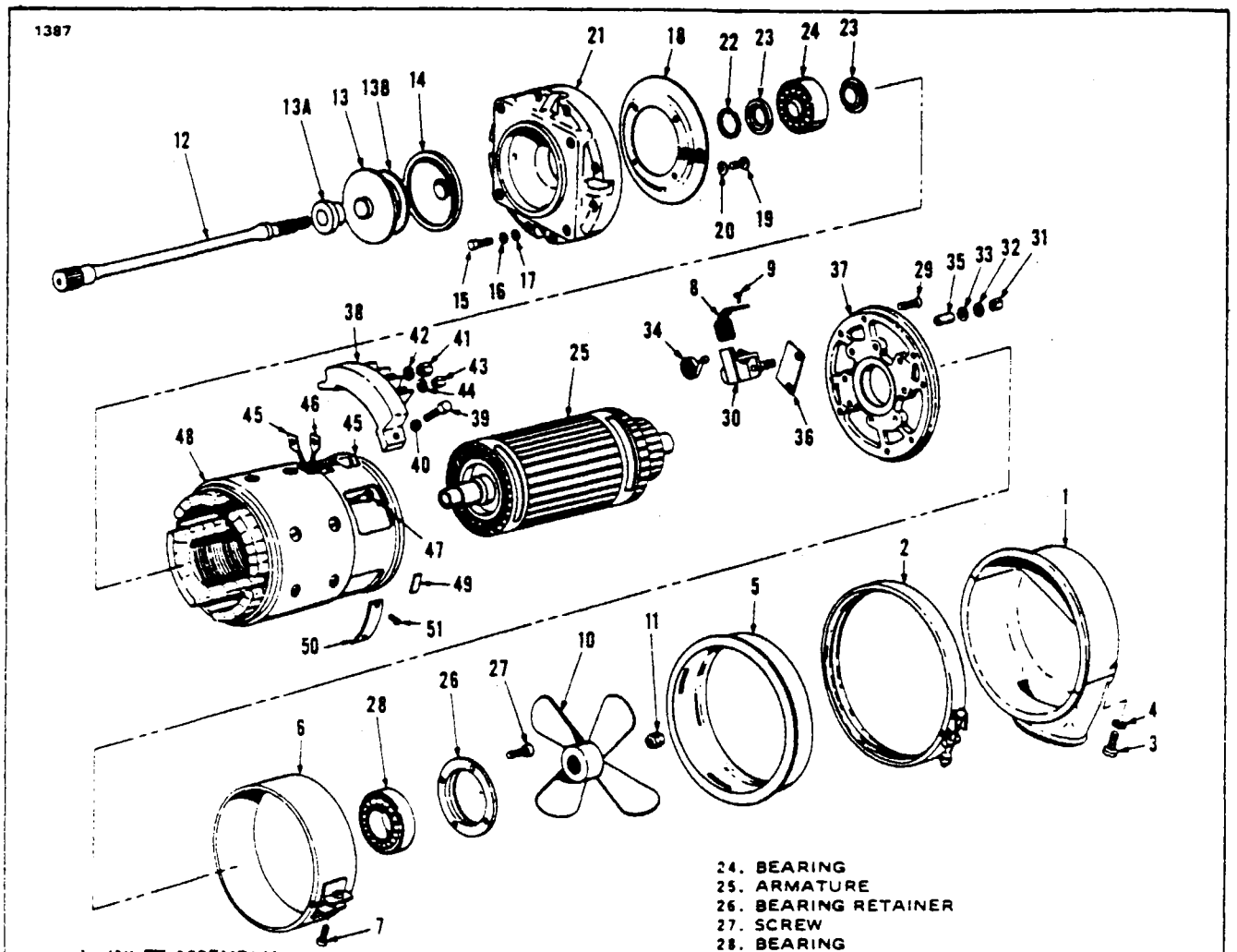

1. INLET ASSEMBLY
2. CLAMP
3. SCREW
4. WASHER
5. COVER (FAN)
6 COVER (BRUSH)
7. SCREW
8. BRUSH
9 SCREW
10 FAN
11. LOCKNUT
12. DRIVE SHAFT
13. PLATE (DAMPENER)
13A. HUB (DAMPENER)
13B. RING
14. BACK PLATE
15. SCREW
16. LOCK WASHER
17. WASHER
18. SCREEN
19. SCREW
20. WASHER
21. END BELL
22. RETAINING RING
23. DISC
24. BEARING
25. ARMATURE
26. BEARING RETAINER
27. SCREW
28. BEARING
29. SCREW
30. BRUSH HOLDER
31. NUT
32. WASHER
33. WASHER
34. SPRING
35. SLEEVE
36. INSULATION
37. SUPPORT
38. TERMINAL BLOCK
39. SCREW
40. WASHER
41. NUT
42. WASHER
43. NUT
44. WASHER
45. TERMINAL LUG
46. TERMINAL LUG
47. TERMINAL LUG
48. STATOR
49. INSTRUCTION DECAL
50. IDENTIFICATION PLATE
51. SCREW

Figure 11-2. Exploded View of DC Starter Generator (Lear-Siegler)

e. Using a voltmeter, attach positive lead to the electrical lead removed from terminal stud C+ on Starter-Generator and the other voltmeter lead to airframe ground. Voltmeter should read the battery voltage of 24-volts.

f. Turn battery master switch off.

g. Disconnect the voltmeter positive lead from wire removed from Starter-Generator terminal stud C+.

h. Remove the voltmeter from the airplane.

i. Connect electrical lead previously removed to C+ terminal stud on Starter-Generator.

11-7. ADJUSTMENTS. The only adjustment necessary to maintain the generator system is the adjustment of the voltage control on the voltage regulator. A voltage of 28.5-volts must be maintained. All other control adjustments are made at time of installation and need not be reset.

NOTE

Since the Starter-Generator and Regulator units are designed for use on a single polarity type electrical system, the following listed precautions must be observed when servicing the charging circuits. Failure to observe these precautions could result in serious damage to the electrical equipment.

a. When installing a battery, always make absolutely sure the ground polarity of the battery and the ground polarity of the Starter-Generator are the same.

b. When connecting a booster battery, make certain to connect the negative battery terminals together and the positive battery terminals together.

c. When connecting a charger to the battery, connect the charger positive lead to the battery positive terminal and the charger negative lead to the battery negative terminal.

d. Never operate the Starter-Generator on an open circuit. Make absolutely certain all connections in the circuit are secure.

e. Do not short across or ground any of the terminals on the Starter-Generator or voltage regulator.

11-8. STARTER-GENERATOR SERVICE TEST SPECIFICATIONS. Lear Siegler specifications for the 28-volt Starter-Generator installed as standard equipment on PA-31T series airplanes are as follows.

11-9. OVERHAUL. When repairing the unit, complete disassembly may not be required. In some cases it will only be necessary to perform those operations which are required to effect the repair. However, in this section, the complete overhaul is covered step-by-step to provide detailed information on each operation. In actual service practice, these operations may be used as required.

11-10. DISASSEMBLY. (Refer to Figure 11-2).

a. Loosen the clamp (2) holding the air inlet assembly (1) enough so that the air inlet assembly may be removed. Remove the fan cover (5) by twisting to unlock it. If necessary to separate air inlet castings (1), remove the necessary screws (3) and washers (4).

b. Loosen the screw (7) and take the brush cover (6) out of the slot. Remove brush cover.

c. To remove the brushes, remove screws (9) securing the brush and field leads and remove the brushes (8) from the holders (9).

d. Remove the locknut (11) from the drive shaft and remove fan (10).

e. Tap out drive shaft (12) using a plastic hammer; then remove hub dampener (13A), plate dampener (13), friction ring (13B), and dampener back plate (14).

f. Remove the screws (15), lock washers (16) and washers (17); then remove drive end bell assembly (21). Remove screws (19), washers (20), and screen (18) from end bell only if necessary for repair.

NOTE

Items (16) and (17) not used on quick-disconnect model (23048-006).

g Remove the screws (29) securing the bearing support assembly (37) with the armature assembled.

h. To disassemble the support assembly, put the support end bell in a suitable arbor press; then press armature assembly out of the support bearing. To disassemble the armature (25), remove the retaining ring (22) and disc-baffle (23) from the armature shaft. Remove the bearing (24) from armature by using a suitable bearing puller, then remove the disc-baffle (23) from the armature.

i Remove the screws (27) securing the bearing retainer (26) and remove bearing retainer Press bearing (28) out of support (37).

j. Do not disassemble brush holders and springs unless inspection reveals that replacement of parts is required

k. Disassembly of the stator assembly is not required. If inspection reveals the stator to be defective, replace it.

11-11 CLEANING Clean all parts except the armature, bearings, brushes,and stator by washing in a dry cleaning solvent. Federal Specifications P-D-680 (Stoddard Solvent). Clean armature by wiping with a cloth moistened in the solvent. Clean bearings and brushes with a dry cloth. Blow dust and other foreign matter from inside the stator, then wipe with a clean cloth moistened in solvent.

CAUTION

Do not use carbontetrachloride for cleaning.

11-12. INSPECTION The following table will give the name of the parts, their index number, and the type of inspection required for that part:

TABLE XI-1B STARTER-GENERATOR TEST SPECIFICATIONS (LEAR-SIEGLER)

DC Starter-Generator Model	23048-001
Rating (kw)	6
Continuous load within speed range (amp)	200
Voltage (gen. output)	30
Speed range (rpm)	5800 to 12,000
Direction of rotation when viewing shaft end	CCW
Operating altitude (max.-ft.)	35,000
Voltage (starter, max.)	28
Positive terminal designation	B+
Negative terminal designation	E-
Positive field-terminal designation	A+
Equalizer terminal designation	D
Starting terminal designation	C+

TABLE XI-II. INSPECTION OF COMPONENTS

INDEX NO (See Figure 11-2.)	NOMENCLATURE	INSPECTION TIME AND REPLACEMENT
5, 6	Covers	Check for dents or broken spot welds. Replace if damaged.
8	Brush	Check for cracks, chips, frayed leads and loose rivets or shunt connections. Replace if defective. Replace brushes if remaining allowable wear will be exceeded before the next inspection. (See Figure 11-3.) Inspect every 200 hrs. and replace as required. Brush length new 1.30 inches.
10	Fan	Inspect for looseness of blade on hub, or a bent or cracked condition. Forward edge of blade shall not measure less than 0.100 inch from locating shoulder of hub, and the back edge of blade shall not measure more than 0.830 inch. Replace if beyond repair
12	Drive shaft	Magnaflux inspect per MIL-I-6868 for cracks. Visually inspect for broken or damaged splines and spline wear. To measure spline wear on the large splines, use two 0.096 inch diameter pins. Dimension across the pins should be not less than 0.7262 inch. Replace shaft if dimensions are less than indicated. Inspect the Inter spline of the engine drive gear for wear tolerance Refer to Pratt and Whitney Aircraft of Canada LTD. Maintenance Manual, Part 3, Section 3.
8, 9, 30, 34 and 36	Brush replacement	Utilize ONLY File No 23700, Rev. 2, dated February 10, 1981. Disregard all previous editions.

TABLE XI-II. INSPECTION OF COMPONENTS (cont.)

INDEX NO. (See Figure 11-2.)	NOMENCLATURE	INSPECTION
13	Plate, Dampener	Inspect for cracks and warpage. Replace if defective, or if Belleville spring shows signs of wear.
13A	Hub, Dampener	Magnaflux inspect per MIL-I-6868 for cracks. Replace if defective.
13B	Ring, Friction	Inspect for cracks and warpage. Replace ring if thickness is not .063 minimum.
14	Dampener back plate	Magnaflux inspect per MIL-I-6868 for cracks. Replace if defective.
21	Drive-end end-bell	Inspect for cracks or warpage. Replace if defective. Repair or replace if liner I.D. is not within 1.8501/1.8504 inch.
24, 28	Ball bearings	Replace at each overhaul.
25	Armature	Inspect for worn, pitted or burned commutator bars; damage to windings, retainer band or shaft; shaft concentricity and bar to bar concentricity. Refinish commutator per Paragraph 11-13, if necessary, and electrical test per Paragraph 11-27 Bar to bar concentricity must be within 0.0001 inch and concentricity with shaft must be within 0.005 inch Total Indicator Reading. Minimum commutator diameter is 2.055 inches.
30	Brush holder and spring	Inspect for cracks, warpage or weak spring.

TABLE XI-II. INSPECTION OF COMPONENTS (cont.)

INDEX NO. (See Figure 11-2.)	NOMENCLATURE	INSPECTION
37	Support assembly	Inspect for cracks or warpage. Replace if defective. Perform electrical test per Paragraph 11-27. Repair or replace if liner I.D. is not within 1.8501/1.8504 inch.
38	Terminal block	Inspect for cracks, and loose or damaged terminals. Check for shorts between terminals, but do not hi-pot to avoid damaging embedded capacitors. Replace if defective.
48	Stator assembly	Visually inspect for cracks, burned or damaged insulation, loose pole shoes and damaged coils. Replace stator assembly if defective. Perform electrical test per Paragraph 11-13.

11-13. REPAIR AND REPLACEMENT.

a. If inspection reveals that the commutator is rough, pitted, scored or burned, refinish in a lathe that is accurately set up and adjusted. Remove only enough material to clean and true up the commutator surface. Replace the armature if it has to be turned to less than a diameter of 2.055 inches. Hold commutator diameter concentric with the bearing journals within 0.0005 inch Total Indicator Reading.

b. To undercut the mica turn the commutator in a lathe. If the depth of undercut remaining is less than .032 inch, the mica between the bars should be re-undercut to .032 inch. Use a triangular scraper to remove all excess mica, sharp edges, and burrs from between the bars. Use a bristle brush to remove metal chips and mica particles from the slots between the commutator bars. Check tolerances as outlined in Step a.

c. To polish the commutator, mount the armature in a lathe and operate at a speed of 500 to 600 RPM. Polish commutator by using sandpaper (5/0) with an accurately cut block of wood over its entire length and at least one-third of its perimeter. Remove any dust or particles from between the commutator bars with a bristle brush.

d. After refinishing the commutator, the armature should be checked for proper balance, which should be within 5 grain-inches. If balance correction is required, mill the stainless steel retaining bands at each end of the lamination stack until the proper balance is obtained. Only two .25 inch wide and .031 inch deep millings are permitted in each band to maintain adequate strength.

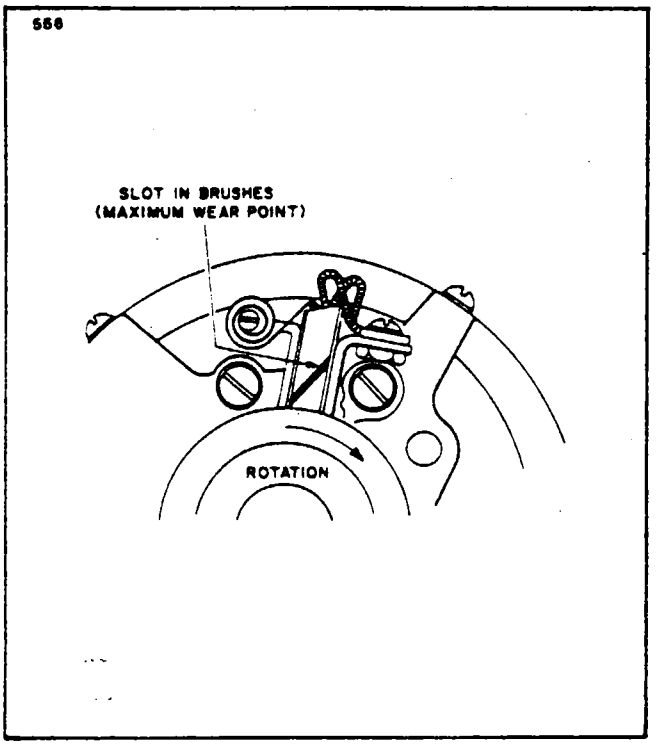

Figure 11-3. Correct Position of Brushes and Springs

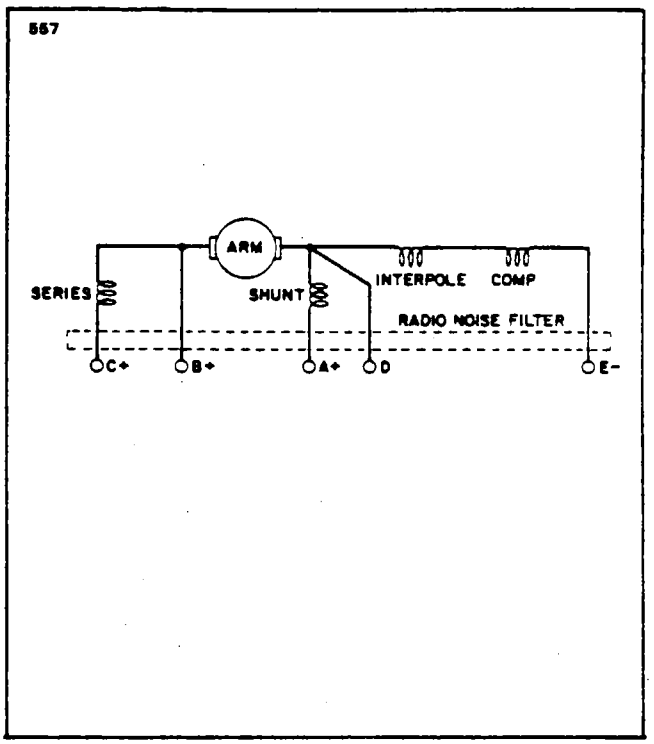

Figure 11-4. Electrical Connections of Starter-Generator

e. Refer ONLY to Brush Maintenance Manual 23700, Rev. 2 for service information on brushes. Discard previous editions per Lear-Siegler Inc. (2/10/81)

f. A unit with reversed polarity may be corrected by flashing the field as in the following procedure:

CAUTION

Do not flash the field while unit is in operation.

1. Disconnect the leads to the external voltage regulator.
2. Connect the negative terminal of battery to terminal "E."
3. Connect the positive terminal of battery to terminal "A" through a knife switch.
4. Close the switch for 5 seconds; then open switch and disconnect from battery.

NOTE

If flashing the field fails to correct generator polarity, check for incorrect connections or defective field circuit.

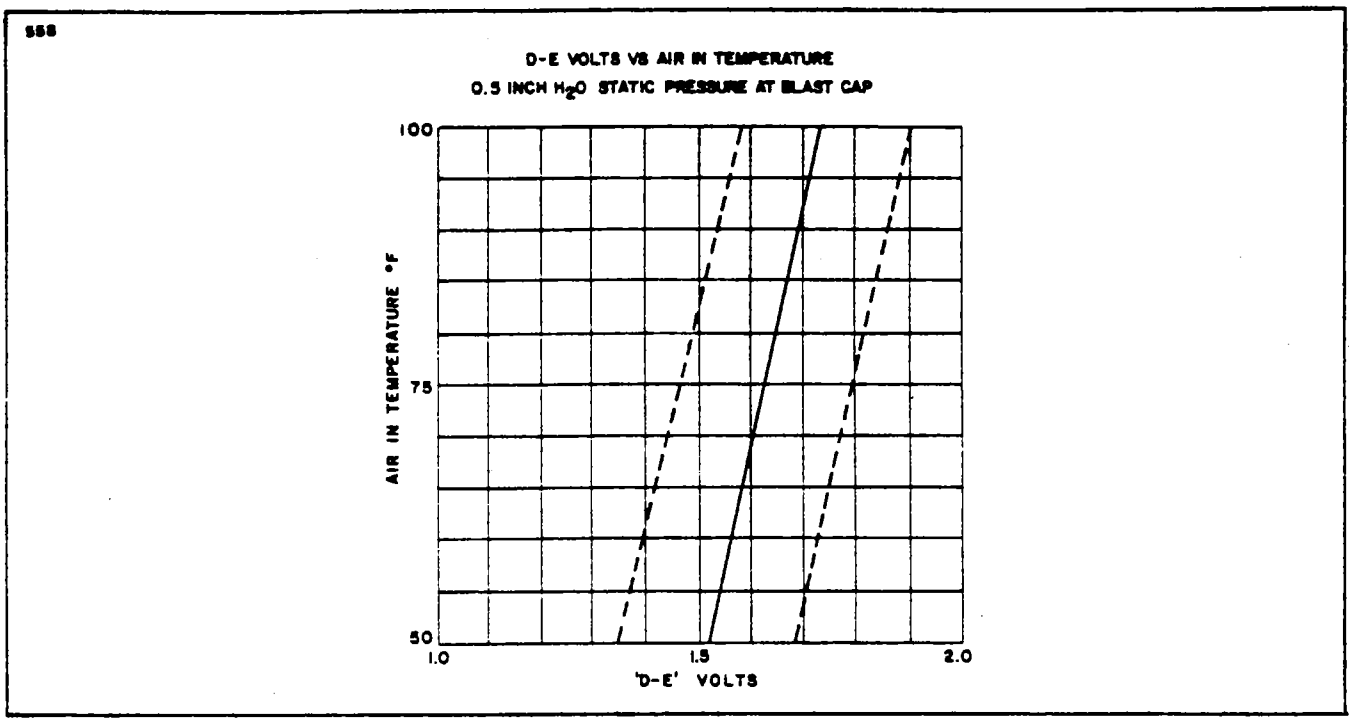

Figure 11-5. Paralleling Voltage Chart

11-14. REASSEMBLY (See Figure 11-2.)

a If the identification plate (30) was removed, reinstall with the appropriate screws. Coat surface lightly with a moisture and fungus resistant varnish per MIL-V-173 or PED P/N 05-651260

b Press ball bearing (28) into the support (37) and secure with bearing retainer (26) and screws (27). Apply anti-seize compound, JAN-A-669, or PED P/N 05-648227 to screw.

c. Install disc-baffle (23) on drive end of armature with recessed area facing armature. Support armature in an arbor press; then press new ball bearing (24) on armature shaft pressing on bearing inner race Install the other disc-baffle (23) over armature shaft with recessed area facing away from armature. Install retaining ring (22) and make certain that ring engages the groove fully.

d. Support armature in an arbor press; then position support, with bearing assembled, over commutator end of armature shaft and press bearing on armature shaft end. Press on inner race of bearing only

e Position support, with armature assembled, over end of stator and secure with screws (29).

f. Install drive end bell assembly against stator; secure with washers (17), lock washers (16) and screws (15) Make certain end bell is fully seated on bearing.

NOTE

Items (16) and (17) not used on quick-disconnect model (23048-006).

g Install dampener back plate (14) on armature and make certain back plate taper is fully seated on drive shaft taper

h Install hub dampener (13A), plate dampener (13), and friction ring (13B) over small spline end of drive shaft (12) and make certain dampener taper is fully seated on drive shaft taper

i Lubricate the drive shaft splines as specified on the lubrication chart in Section II.

j. Install the drive shaft through armature, making certain splines of drive shaft are fully engaged with splines of armature.

k. Install fan (10) and secure with nut (11). Tighten nut to 100 to 120 inch-pounds.

l. Install brushes (8) and secure brush and field leads with appropriate screws (7). Make electrical connections per Figure 11-4.

m. Install brush cover (6) and secure with appropriate screw (7). Cover may be assembled in any angular position.

n. Install fan cover (5); then position so that grooves will accomplish a locking effect. Turn clockwise or counterclockwise to lock.

NOTE

Do not assemble air inlet until unit is installed in the aircraft.

o After installing air inlet (1), secure with clamp (2). Torque nut to 25 inch-pounds

11-15 STARTER-GENERATOR SYSTEM. (AUXILEC, INC.)

11-16 DESCRIPTION AND OPERATION. The Starter-Generators are located on the aft top side of the engines The purpose of this unit is to provide torque for engine starting and to generate DC electrical power. When the unit is being utilized as a starter, it may be energized by the aircraft battery or through the use of an external power source.

NOTE

The following information is taken from Auxilec, Inc. Maintenance Manual. For the most current information, refer to these manuals. Refer to Section II for address, manual and part number.

CAUTION

The selector switch should not be left in the START position any longer than the time required for a normal engine start; otherwise, the unit may be damaged by excessive temperatures caused by the large starting currents

11-17 CHECKING STARTER-GENERATOR SYSTEM. The system incorporates two ammeters which provide an independent output check of each generator and a voltmeter which monitors the electrical bus voltage. Should either ammeter fail to indicate an output from its associated generator, check the appropriate circuit breaker

If the circuit breakers are in their normal operating position, a further check of the system should be accomplished

a Ascertain that the ammeters are operating properly.

b Ascertain that all electrical units are off and battery is fully charged.

c. Disconnect electrical lead at terminal stud C+ on Starter-Generator being tested. (L or R)

d Turn on battery master switch and turn selector switch (L or R) for the unit being tested to the START position

e Using a voltmeter, attach positive lead to the electrical lead removed from terminal stud C+ on Starter-Generator and the other voltmeter lead to airframe ground Voltmeter should read the battery voltage of 24-volts

f. Turn battery master switch off.

g. Disconnect the voltmeter positive lead from wire removed from Starter-Generator terminal stud C+.

h. Remove the voltmeter from the airplane.

i. Connect electrical lead previously removed to C+ terminal stud on Starter-Generator.

11-18. ADJUSTMENTS. The only adjustment necessary to maintain the generator system is the adjustment of the voltage control on the voltage regulator A voltage of 28.5-volts must be maintained. All other control adjustments are made at time of installation and need not be reset.

NOTE

Since the Starter-Generator and Regulator units are designed for use on a single polarity type electrical system, the following listed precautions must be observed when servicing the charging circuits. Failure to observe these precautions could result in serious damage to the electrical equipment.

a. When installing a battery, always make absolutely sure the ground polarity of the battery and the ground polarity of the Starter-Generator are the same.

b. When connecting a booster battery, make certain to connect the negative battery terminals together and the positive battery terminals together.

c When connecting a charger to the battery, connect the charger positive lead to the battery positive terminal and the charger negative lead to the battery negative terminal.

d. Never operate the Starter-Generator on an open circuit. Make absolutely certain all connections in the circuit are secure.

e Do not short across or ground any of the terminals on the Starter-Generator or voltage regulator.

INTENTIONALLY LEFT BLANK

11-19 STARTER-GENERATOR SERVICE TEST SPECIFICATIONS. Auxilec specifications for the 28-volt Starter-Generator are as follows

TABLE XI-III STARTER-GENERATOR TEST SPECIFICATIONS (AUXILEC)

DC Starter-Generator Model	8013C; 8012C1
Rating (kw)	6
Continuous load within speed range (amp)	200
Voltage (gen output)	30
Speed range (rpm)	7000 to 12150 tr mn
Direction of rotation when viewing shaft end	CCW
Operating altitude (max - ft)	31,000 Blast Cooled (8013C) 35,000 Blast Cooled (8012C1)
Voltage (starter, max)	36
Positive terminal designation	B
Negative terminal designation	E
Positive field-terminal designation	A
Equalizer terminal designation	D
Starting terminal designation	C (on 8013C)

11-20 OVERHAUL When repairing the unit, complete disassembly may not be required. In some cases, it will only be necessary to perform those operations which are required to affect the repair However in this section only disassembly, cleaning, inspection checks, reassembly and brush running in. Refer to Section II, Table II-VIII for Auxilec, Inc Maintenance Manual address and part number. Refer to this manual for more detailed information

11-21 DISASSEMBLY (Refer to Figure 11-6.)

NOTE

Disassembly should only be done during complete overhauls. At each disassembly reject all locking devices. If it is a complete overhaul, reject also brushes (12), bearings (19 and 25) and fibrous damper disk (27)

NOTE

Mark the position of the parts, and for the bearings, mark the position of internal and external cages.

a. To remove the brushes (12), unsafety and remove screw (1) securing brush band (2) in position. Mark brushes (12) and shunts positioning. Remove screws (11), washers (10) and lift brush springs (13). The brushes are now free to be removed.

b. Remove screws (34) and washers (35) securing fan cover (36) in position.

c. Lock the drive shaft (23) in rotation maintained by damper disk (26). Remove and discard nut (41). Also remove spring (40) and washer (39).

d. Remove drive shaft (23), with damper disk (26) and fibrous damper disk (27).

NOTE

To remove damper disk (26) from drive shaft, tool P N E3370 should be used. (Refer to Section II, Special Tools.)

e. Remove damper disk (28) using the extractor P N A1003, fitted with end piece P N 4B09378 and pull disk out. (Refer to Section II, Special Tools.)

f. To remove the fan, unsafety nut (43) then stop the armature (31) in rotation with key P N E3392 and remove nut (43) using key P N 405394 Remove and discard washer (38). The fan is now free to be removed and key (42). (Refer to Section II, Special Tools.)

g. To remove the commutator bearing assembly, unsafety and remove screws (21), washers (20) and clamp (22) Discard washers (20)

h. Remove circlips (24) and then unsafety and remove screws (17), washers (16). Discard washers (16)

i. Remove bearing assembly (32) and armature (31) from the stator (30).

NOTE

Hold armature (31) of the assembly and not the commutator bearing assembly. DO NOT touch the commutator bars.

j. Remove gasket (18) then remove the commutator bearing assembly from armature carefully not to damage the commutator bars

k. Remove screws (33) and clamp (37) then extract bearing (19).

l. Remove pins (15), washers (14), spacers, then brush springs (13)

m. Remove screws (7), flange mounting (29) then extract bearing (25).

n To disassemble the stator (30) remove terminal board by removing nuts (3), washers (4) and then nuts (5) and washers (6)

NOTE

To prevent deterioriation to the terminal board fences use box wrenches

o Unsafety and remove screws, washers and then remove terminal board carefully not to damage connecting wires. Discard washers.

p. Carefully push aside the cables from the set of coils, then remove insulator (9)

11-22 CLEANING

a. Mechanical Parts:

1 Clean the mechanical parts with Aliphatic Naphtha, Grade F, and blow dry with dry compressed air

NOTE

The brushes and bearings should not come in contact with the cleaning agent.

b. Windings:

1 Clean the windings with a brush in a container of Aliphatic Naphtha, Grade F.

NOTE

Particular attention should be given to the winding base.

2 Blow dry the washed windings with a jet of dry compressed air.

3 Dry in an oven at 120°C for 1 hour approximately.

11-22a REMOVING CARBON DUST FROM AUXILEC STARTER-GENERATOR. (Refer to Figure 11-5a.) Carbon dust from the starter-generator carbon brushes may be removed by using Auxilec Tool P N 506280 and a source of compressed air

This carbon dust, under cooling air pressure, is pushed inside the generator and accumulates in any cavity or recess in the yoke as well as in the armature One area particularly likely to retain the carbon dust is located just under the conductor end winding where the holed disc used to pre-balance the armature is mounted.

The carbon dust may be blown out using one of the following methods:

a If the starter-generator has been removed and disassembled:

NOTE

Cleaning of contaminated parts should be performed in a well ventilated room

The air pressure used should be as high as possible, but within the maximum limits of the local safety codes. Also, the air should be dry and filtered

1 Insert the nozzle of the tool between the radial leads connecting the bars of the commutator to the conductors up to the black band (on the tool nozzle) as shown in Figure 11-

2 When the tool has been inserted correctly, blow out the armature until carbon dust ceases to come out The cleaning should be done around 360° of the armature with the tool inserted every 2 or 3 gaps.

3 When the commutator end has been cleaned, use the nozzle to remove carbon from the drive end of the windings

4 Also blow out any accumulated carbon inside the yoke and field assembly

b If the starter-generator is removed, but not disassembled:

1 Remove the brush band.

2 Insert the nozzle of the tool as described in step a, item 1. Accomplish this by passing the nozzle first through the spaces between the brush holders.

3 Repeat step a, item 2 by rotating the rotor by hand.

4 Although not as accessible as if the starter-generator was disassembled, the drive end of the rotor and the yoke and field assembly should be blown out whenever possible

c If the starter-generator is still mounted on the engine, repeat the procedure in step b as far as possible

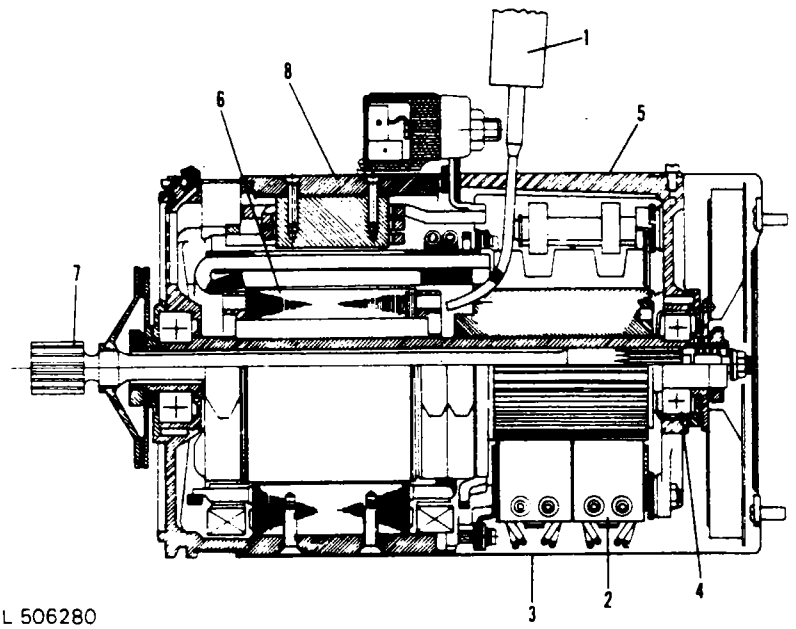

1 AUXILEC TOOL 506280
2 BRUSHES
3 STRAP
4 BEARING
5 COMMUTATOR BEARING HOUSING
6 ARMATURE
7 DRIVE SHAFT
8 STATOR AND HOUSING ASSY

Figure 11-5a Position of Auxilec Tool for Blowing Out Carbon Dust From Auxilec Starter-Generator

11-23. INSPECTION CHECKS.

a Stator Assembly.

1 Visually inspect for cracks, burned or damaged insulation and shunt inductor resistance between terminals A and D. The resistance value must be 1.95 + 5% at 20° C+ if not, replace stator assembly

2 Check for continuity of series inductor between terminals C and B. If no continuity, replace stator assembly.

3. Check for continuity of commutating poles and compensation windings between terminals D and E If no continuity, replace stator assembly.

b Armature

NOTE

DO NOT touch commutator bars.

1 Inspect for worn, pitted or burned commutator bars; damage to windings, retainer band or shaft

2 Check insulation between commutator bars and armature ground.

c Brushes:

1 Check for cracks, chips, frayed leads, not greased, wires are not burnt or unsoldered and their insulating sheathes are in good condition. Replace if defective.

2 Replace brushes if remaining allowable wear will be exceeded before the next inspection. **(Refer to Figure 11-7.)

3 If one brush is defective, discard the whole set of brushes.

d Bearings:

1 Check that the bearings turn freely, without friction and without play and that their seals are in correct condition If not, replace defective bearing

e. Commutator Bearing Assembly:

1 Inspect brush guides for any damage and distortion, their inner surface should be smooth If not, replace commutator bearing assembly.

THIS SPACE INTENTIONALLY LEFT BLANK

f. Fan.
   1 Inspect for looseness of blade on hub, or a bent or cracked condition.
g. Brush Holder and Spring:
   1. Inspect for cracks, warpage or weak spring.
h. Terminal Block:
   1 Inspect for cracks, and loose or damaged terminals.
   2. Check for shorts between terminals.
   3. Replace if defective.

11-24. REASSEMBLY (Refer to Figure 11-6.)

a. To reassemble the stator (30) carefully release the stator connections then install insulator (9)
b. Install terminal board (8) and secure in position with screws and new washers.
c Fold nut retainer lugs over the screws to safety them.
d. Install nuts (3 and 5) with washers (4 and 6) to terminal board (8). Do not tighten nuts (3 and 5) at this time.
e. Reassemble the commutator bearing assembly (32) by first installing the brush springs (13), spacers, washers (14) and then secure them to their shaft with pins (15).
f. Install ball bearing (19) according to the markings made during removal.

NOTE

Apply a light coat of Normaly compound 201 to the internal and external bearing cages.

g. Install clamp (37) and secure it with screws (33). Torque screws (33) to 0.150 m. daN. (13 inch pounds.)
h. Install ball bearing (25) according to the markings made during removal.
i. Before installing drive shaft (23) first insert damper disk (26) and locate it by means of tool P N E3390. (Refer to Section II, Special Tools.)
j. Position commutator bearing assembly (32) into the bearing internal cage (19) on armature shaft (31), aligning the marks made during disassembly.

NOTE

DO NOT touch commutator bars

k. Install flange mounting (29) on stator (30) according to the marks made during disassembly, and secure in this position with screws (7).

NOTE

Coat the threads of screws (7) with Loctite 932 and then torque to 0.200 m. daN. (18 inch pounds).

l. Install gasket (18).
m Install the commutator bearing assembly (32) with armature (31) in the stator (30) with its flange mounting (29) and position the forward end of the armature (31) into the bearing internal cage (25).

NOTE

Align the marks made during disassembly on the bearing internal cage and the forward part of the armature shaft and also on the stator and the commutator bearing assembly.

n. Secure commutator bearing assembly (32) by means of screws (17) fitted with washers (16). Torque screws (17) to 0.200 m. daN. (18 inch-pounds).

o. Fold washer lugs over screws in order to safety them.

p. Insert circlips (24) in armature groove.

q. Install clamp (22) and secure it with screws (21) fitted with washers (20). Torque screws (21) to 0.05 m. daN. (4 inch-pounds).

r. Fold washer lugs over screws in order to safety them.

s. To install the fan (44) fit the key P/N E3392 through machine nose section in armature splines to keep it from rotating. (Refer to Section II, Special Tools.)

t. Position key (42) then install fan (44).

u. Install washer (38) then block nut (43) by means of key P/N 405394. (Refer to Section II, Special Tools.)

v. Torque nut (43) to 1.6 m. daN. to 2 m. daN. (142 to 177 inch-pounds).

w. Safety nut by folding washer lugs (38) in nut recesses to safety it.

x. Install disk (28) on the armature shaft and position it by means of tool P/N E3487. (Refer to Section II, Special Tools.)

y. Manually rotate the armature and check that there is no friction.

z. To install the brushes (12) lift brush springs (13) and carefully install the brushes (12) in contact with the commutator bars then install brush springs (13) on the top of brushes (12).

NOTE

Position brushes according to the marks made during disassembly and also position brush shunts as shown in Figure 11-7.

NOTE

At each brush replacement it will be necessary to perform a brush preliminary seating and running in operation. (Refer to Paragraph 11-25.)

aa. Connect the connections from the stator those of the brush shunts and secure them by means of screws (11) fitted with washers (10). Torque screws (11) to 0.150 m. daN. (13 inch-pounds).

ab Install drive shaft (23) fitted with damper disk (26) into stator, flange mounting side, then engage its splines on those of the armature.

NOTE

Damper disk (26) must be mating on damper disk (28).

ac. Check that the end of the spline of the drive shaft is not engaged inside of spring recess (40). (See length A, Figure 11-8.)

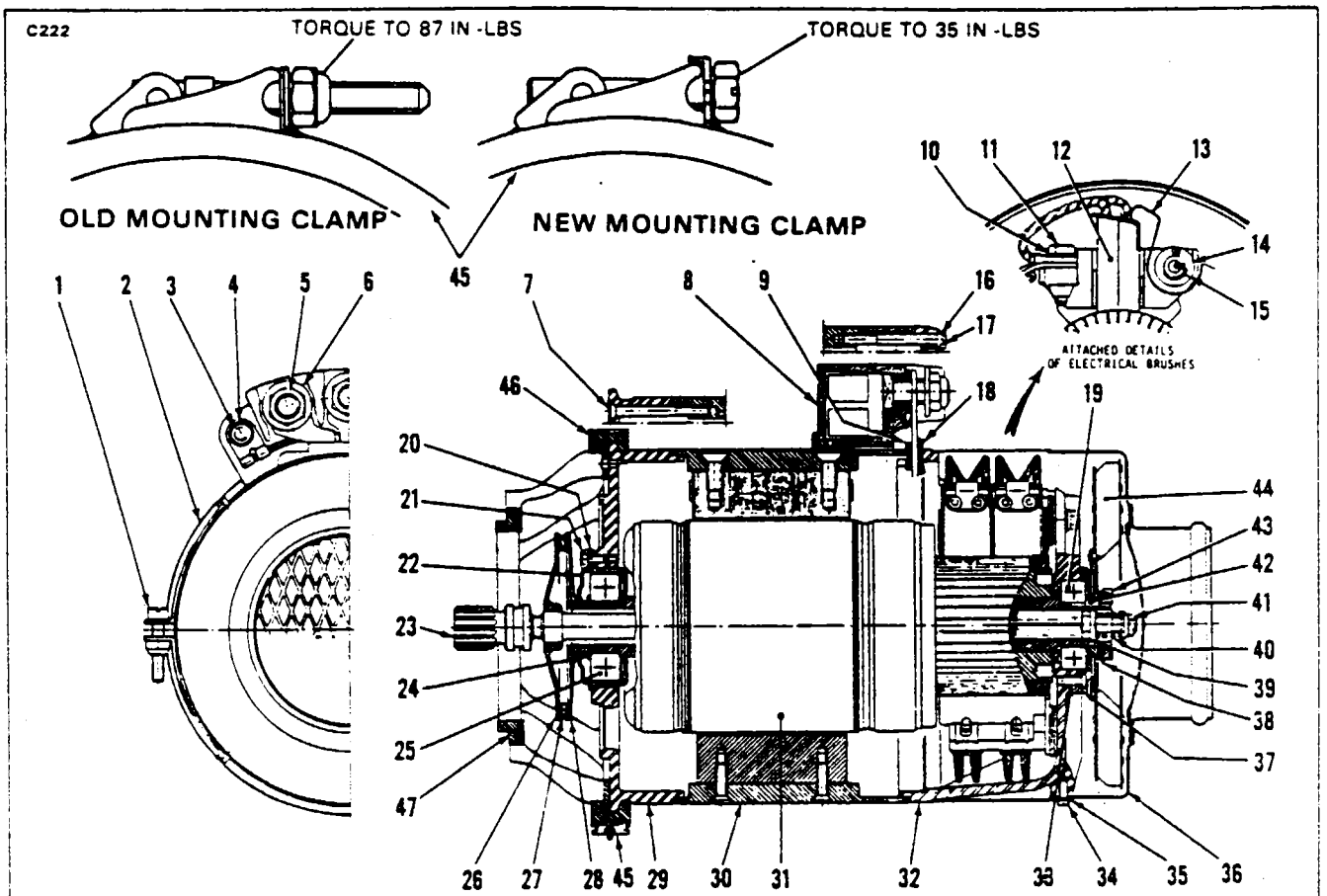

1	SCREW	16	WASHER KEY	31	ARMATURE GENERATOR
2.	BRUSH BAND	17	SCREW	32	COMMUTATOR BEARING
3	NUT	18	GASKET	33	SCREW
4	FLAT WASHER	19	BALL BEARING	34	SCREW
5	NUT	20	WASHER KEY	35	FLAT WASHER
6	FLAT WASHER	21.	SCREW	36	COVER
7	SCREW	22	CLAMP	37	CLAMP
8	TERMINAL BOARD	23	DRIVE SHAFT	38	WASHER
9	INSULATOR	24	CIR CLIPS	39	WASHER
10	FLAT WASHER	25	BALL BEARING	40	SPRING
11	SCREW	26	DISK, DAMPER	41	NUT
12	BRUSH	27	FIBROUS DISK, DAMPER	42	KEY
13	SPRING	28	DISK, DAMPER	43	NUT
14	WASHER	29	MOUNTING FLANGE	44	FAN
15	PIN	30	STATOR GENERATOR	45	MOUNTING CLAMP
				46	SECTOR
				47	MOUNTING PAD

Figure 11-6 Starter-Generator (Auxilec, Inc.)

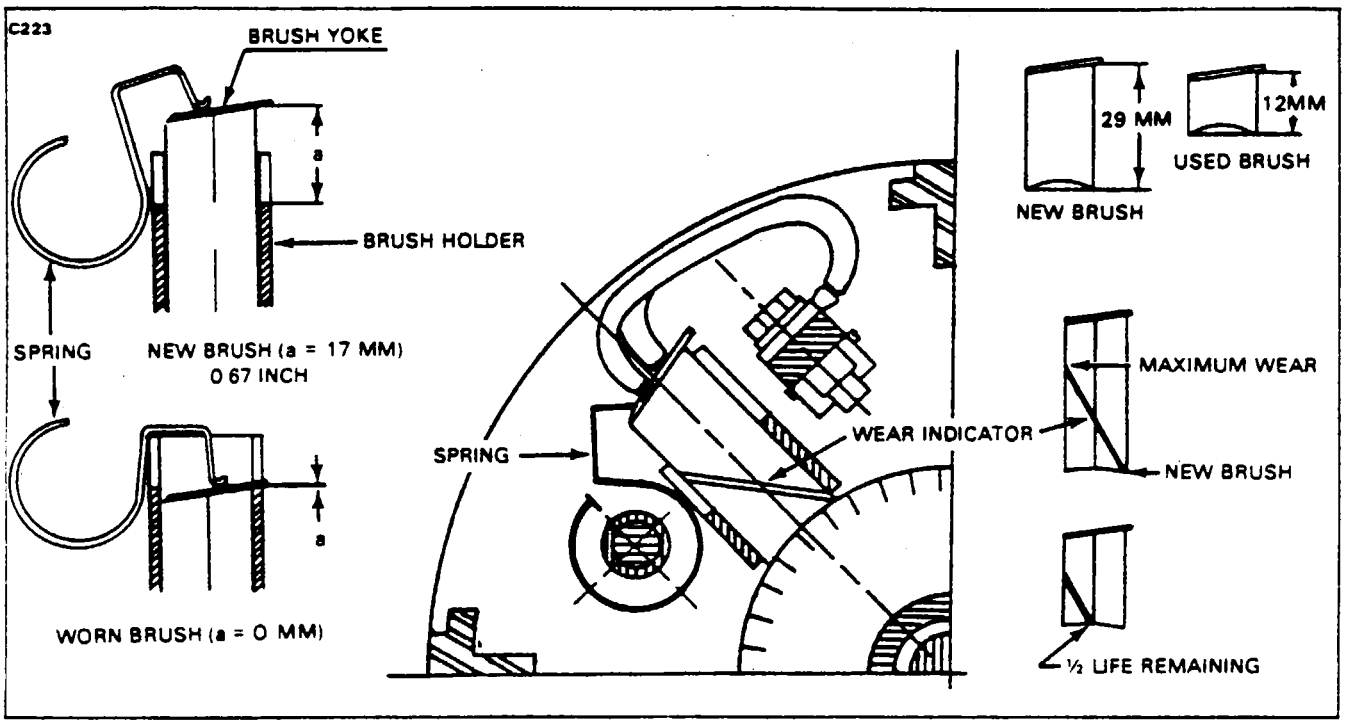

Figure 11-7 Brush Shunts Positioning and Brush Wear Checks

NOTE

If the drive shaft is not located as shown on Figure 11-8, check damper disks (26 and 28), to see that they are not distorted and that they are properly fitted on their own support.

ad Remove the drive shaft fitted with damper disk (26).
ae. Fit the washer (39) and check the dimension B as indicated on Figure 11-9.
af Fit the fibrous damper disk (27) into the damper disk (28) recess.
ag. Fit the drive shaft fitted with damper disk (26) after coating its splines with Normaly compound 201.
ah. Fit washer (39), spring (40) and begin to screw nut (41) a few threads.
ai Block drive shaft in order to prevent its rotation by maintaining it with damper disk (26), then tighten nut (41) to obtain the dimension C as shown on Figure 11-8.

NOTE

When tightening nut (41) ascertain that the fibrous damper disk (27) remains inside the damper disk (28) recess.

aj. Ascertain that damper disk (26) is not off center with damper disk (28).
ak. Manually rotate armature and check for no friction.
al. Install cover (36) and secure it with screws (34) and washers (35). Torque screws (34) to 0.05m. daN (4 inch pounds)

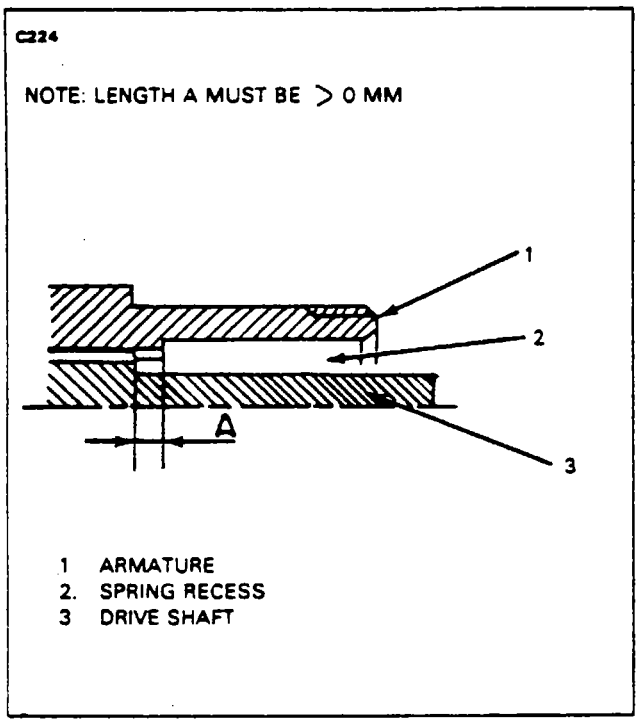

Figure 11-8 Dimension Check of Shaft Drive Sinking

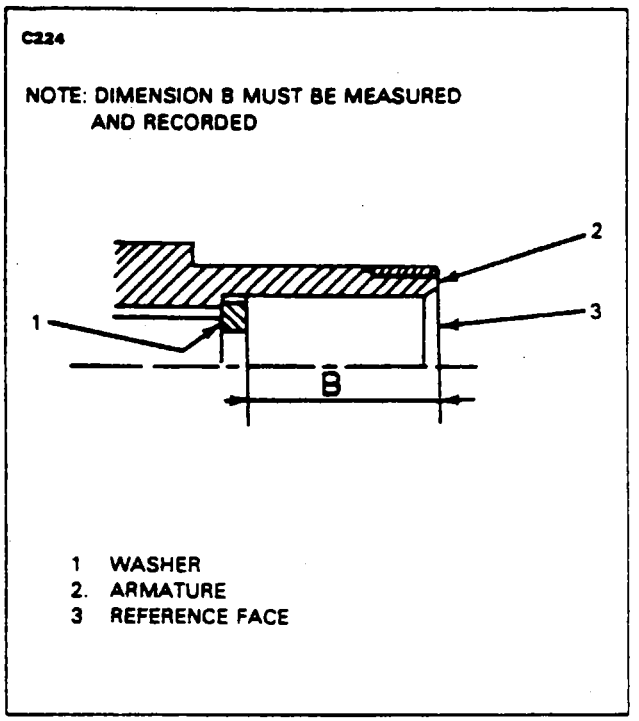

Figure 11-9. Locating Washer

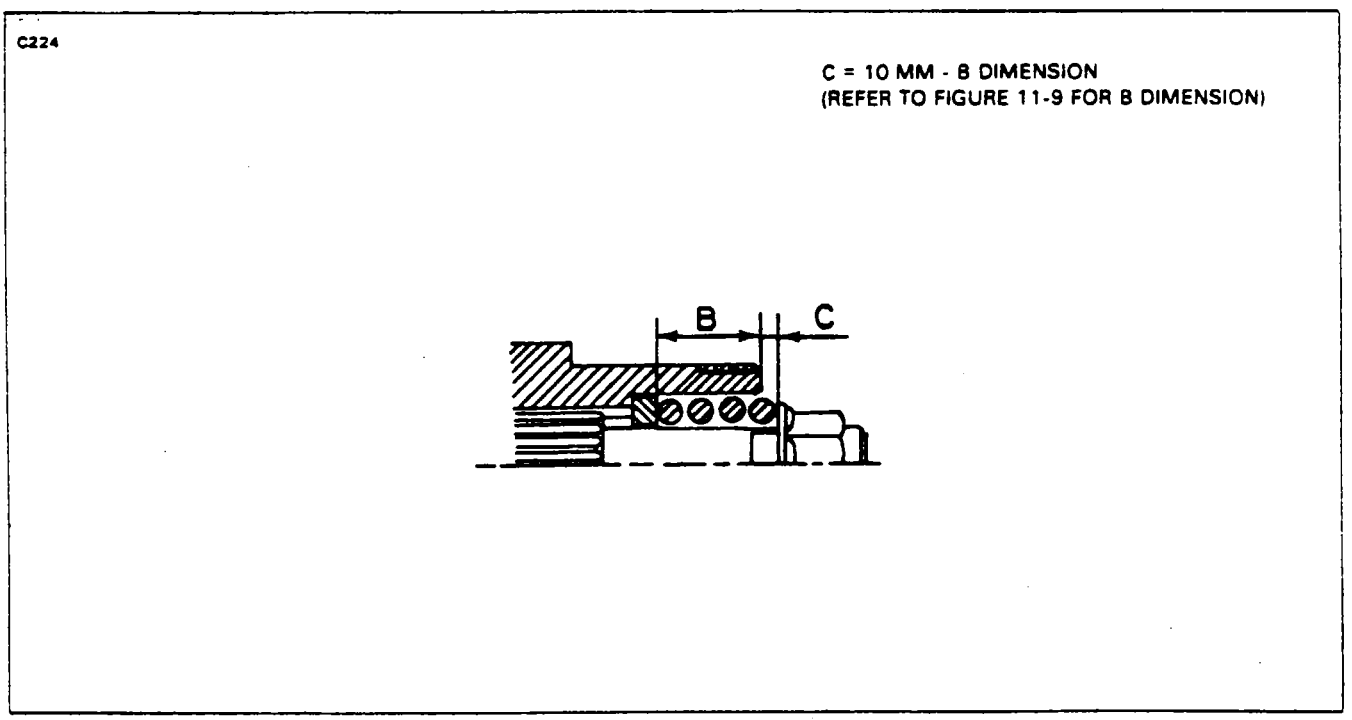

Figure 11-10 Location of Drive Shaft

am. Install brush band (2) and secure with screw (1). Torque screw (1) to 0.200m. daN. (18 inch pounds).
an. Lockwire screws (34) two by two and screw (1) with 0.6mm diameter annealed stainless steel.

NOTE

The electrical connections torque values for terminals A and D are 0.30m. daN. (26.5 inch pounds) and for terminals B, C, and E torque to 1.9m. daN. (168 inch pounds).

NOTE

To prevent deterioration to the terminal board fences use box wrenches.

11-25 BRUSH RUNNING IN (Refer to Figure 11-11.)

CAUTION

This operation must be carried out at each brush replacement.

a. Brush Preliminary Seating:
1. Cut a 45mm (1.77 inches) wide strip of abrasive paper of a length corresponding to a 172 mm (6.771 inches) new commutator bars
2. Keep brushes (12) in a raised position by means of brush springs (13).
3. Stick double face adhesive tape on commutator bars width.
4. Position abrasive paper strip on the commutator bars and stick the end together on the double face adhesive tape

NOTE

The abrasive face of the tape is on the outside.

5. Lower the brushes, apply them on the abrasive face and position the brush springs.
6. Manually drive the armature with key P/N E3392 in a counter-clockwise direction (seen from driving side.) (Refer to Section II, Special Tools.)

NOTE

Turn the rotor regularly and evenly until brush contact surface is 100%. (Check by lifting brushes.)

7. Set the brushes in a raised position and hold them by means of brush springs.
8. Discard the abrasive paper and also the adhesive tape.
9. With a blast of dry compressed air, blow the carbon dust out of the starter generator.
10. Install the brushes in contact with the commutator bars and install the brush springs

b. Brush Running In:
1. Install cover (36) and secure it with screws (34) fitted with washers (35). Torque screws (34) to 0.05m daN (4 inch pounds).
2. Install brush band (2) then secure it with screw (1). Torque screw (1) to 0.200m. daN. (18 inch pounds)
3. Connect the starter generator according to Figure 11-11.

4. Set energization rheostat (Rh1) to the minimum resistance.
5. Set 1-2 "ON" to short circuit ammeter (A1) when instrument starts.
6. Set 1-1 to "ON" and increase gradually resistance (Rh1) to obtain a rotation speed of 5000 rpm.
7. Set 1-2 to "OFF" and read current consumption on (A1).

NOTE

Consumption must not exceed 30 amperes.

8. Operate the generator like this for 3 hours.
9. Set (Rh1) to its minimum and set (1-1) to "OFF".
10. Remove screw (1) then brush band (2).
11. Remove screws (34), washers (35) and then cover (36).
12. Inspect every brush and check its running in: the contact surface must be 100% in the circumference direction and 100% minimum in the axial direction. If not, pursue the brush running in operation until these values are reached
13. Disconnect the instrument.
14. Blow carbon dust out of the starter generator.

NOTE

After brush running in, it is recommended to operate the starter generator for 30 minutes.

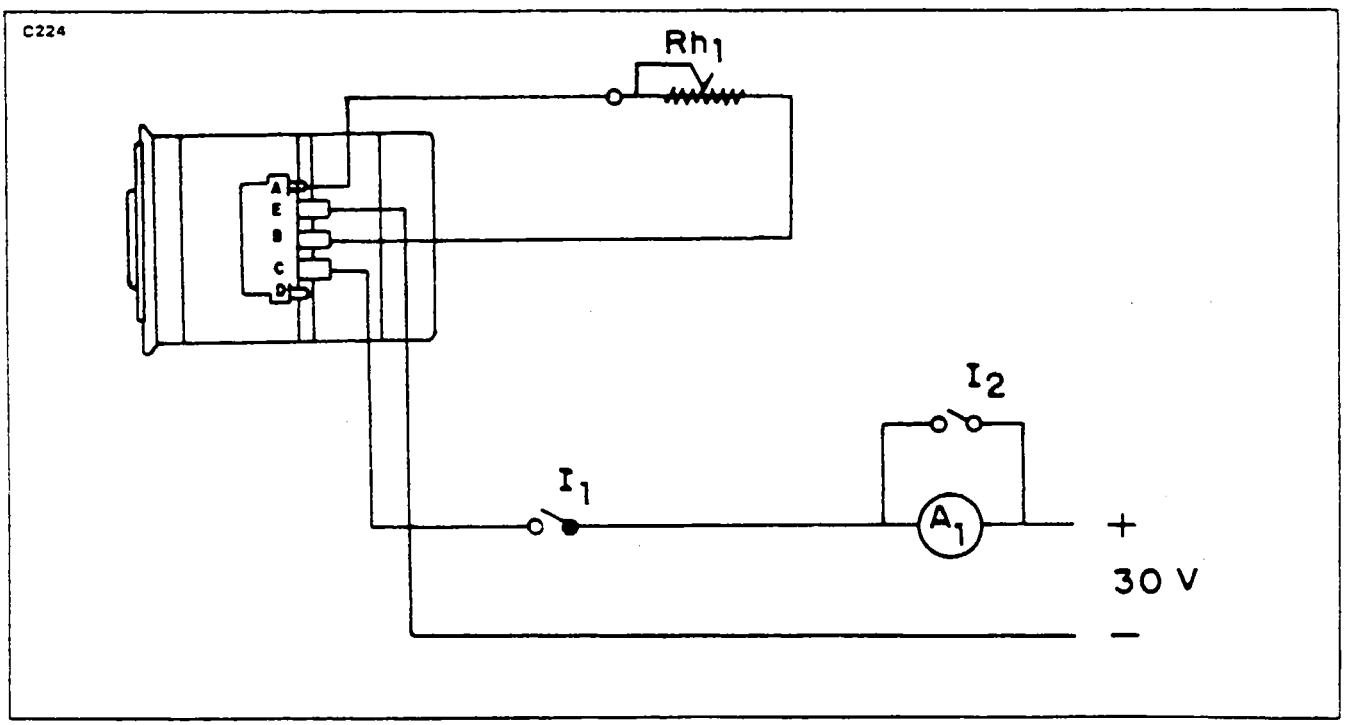

Figure 11-11. Brush Running in Diagram

TABLE XI-IV. TROUBLESHOOTING CHART (STARTER-GENERATOR)

SYMPTOM	CAUSE	REMEDY
Abnormal vibrations and noises.	Fan friction against the cover. Rear bearing faulty.	Check fan and cover, replace faulty part. Replace bearing.
	STARTER	
Does not turn.	Shaft drive broken. Brush shunt cut.	Replace shaft drive. Replace brushes.
On load, does not turn at a normal speed and does not deliver rated torque of 135 inch pounds.	Brushes worn out. Partial short circuit of inductor.	Check brush length and replace them if they are outside tolerance. Replace stator.
Exaggerated power consumption	Short circuit in commutator bars or in armature windings.	Clean commutator bars. If after this operation no improvement replace armature.
	GENERATOR	
No voltage supplied.	Shaft drive broken. Shunt winding shorted or broken.	Replace shaft drive. Replace stator.
Incorrect switching	Brushes do not slide properly in their guides.	Clean brush guides.

11-26. FITS AND CLEARANCES. No special fits or clearances are required; however, fan dimensions must be maintained.

11-27 INSPECTION AND TESTING OF COMPONENTS. The following test equipment will be needed: variable speed test stand capable of driving the unit at speeds from 5,500 to 12,000 RPM at full load and to 14,000 RPM no load. The test stand should have suitable instruments to measure torque, speed, voltage, current and temperature. Also needed is adequate circuitry to load the unit in five steps: 0 amps, no load, 50 amps, 100 amps, 150 amps, 200 amps. The following conditions will also be needed to perform the tests: cool air from a shop air source must be injected into the blast cover.

Test requirements before assembly of the unit.

a. Check the brush holders and support for shorts to ground by using 110-volt AC source and a 7-1/2 watt test light connected in series. Touch one lead to the brush holder and one to the support for one second. If lamp lights, support must be repaired.

b. To test the armature, use a 110-volt source and a 7-1/2 watt light connected in series. Touch one lead to the armature shaft and the other lead to the commutator risers. Also check between each of the two commutator bands and the commutator risers. If lamp lights, the armature is grounded and must be replaced.

c. To test the stator assembly, use the same circuit as before, and touch one lead to the frame and the other to terminal "A". If lamp lights, stator is grounded and must be replaced. Use an ohmmeter and check for continuity by touching one lead of the meter to the negative field lead and the other to terminal "A". The terminal block must be removed for this test.

Test requirements after assembly of the unit. (After overhaul.)

a. Without operational warm-up and regulator connected to the unit, operate as a generator at 13,000 RPM, 30-volts and no load. Record field current, commutation and frame temperature. Shunt field current shall not be less than 81 amperes. Commutation must be black.

b. With the voltage regulator connected to the unit, operate at 12,000 RPM, 30-volts, 200 amps until the frame temperature shows no more than 2° F rise in five minutes. Record the voltage between D and E, air blast inlet temperature, commutation, field current and frame temperature. Commutation should not be worse than pinpoints along the edges of the brushes. The paralleling voltage must be within the limits shown on Figure 11-5. Frame temperature must not exceed air temperature by more than 175° F.

c. Operate the unit at 12,000 RPM, 30 volts. Compound the current at 0, 50, 100, 150 and 200 amps. Field current must increase with load and commutation must not exceed pinpoints.

d. Operate the unit at 6500 RPM, 30-volts and 200 amps, to check regulation at the minimum speed. Record field current, frame temperature and commutation. Shunt field current shall not exceed 8.0 amps. Commutation should not be worse than pinpoints.

e. Reduce the speed to aproximately 5800 RPM. Operate at no load and open field until the frame temperature is 120° F or less. Substitute 1.25 ohms for the regulator in the field circuit and adjust speed to produce 26-volts and 200 amps. Operate until stabilized as in Step b. Record field current, speed, frame temperature and commutation. Speed shall not be greater than 5800 RPM.

f. Reconnect voltage regulator and observe commutation at 30-volts, 0, 100 and 200 amps at speeds of 6500, 10,000 and 12,000 RPM. Record field current, frame temperature and commutation. Commutation must not exceed pinpoints for all conditions.

g. With the unit hot, operate for five minutes at 14,000 RPM with the field circuit open. Then operate at 12,000 RPM, 30-volts and 200 amps. Record field current temperature and commutation. Commutation must not exceed pinpoints.

h. To conduct a dielectric test, remove unit from test stand and while still hot as a result of testing. Conduct a test using 110-volts, AC, 60 Hz. Put one lead on the frame and the other to the leads removed from terminal block. The leads from the terminal block must be removed from studs due to the embedded capacitors connected to ground. The unit shall not be shorted, grounded in any circuit.

i. To conduct tests on the unit as a starter, connect a 50 ohm resistor between terminals "A" and "B."

j. With the unit rigidly mounted in a horizontal position by use of mounting flange, operate at no load with 23-volts applied to terminals "C" and "E." The no load speed shall not be less than 5200 RPM

k Lock the rotor; apply voltage between terminals "C" and "E." Increase the voltage until the output torque is 23 foot-pounds. Do not energize the unit for more than two seconds. Record current and voltage. Current shall not be greater than 500 amps and the voltage shall not exceed 13-volts.

l. Make commutator run out checks while rotating the armature on its own bearings. Record the total indicated run-out and the maximum bar-to-bar difference. Maximum total indicated run-out is to be .0005 inch, and the bar-to-bar difference must not be more than .0002 inch.

11-27a. STARTER-GENERATOR SYSTEM (AUXILEC 8012C1, AUTO-START) (PA-31T1 S N'S 31T-8304001 TO 31T-8304003, AND 31T-1104004 AND UP; PA-31T2 S N'S 31T-1166001 AND UP)

11-27b. DESCRIPTION AND OPERATION. (Refer to Figure 11-11a.) As on the earlier Cheyennes, the starter-generators are located on the top aft left side of each engine. The auto start system however, relies on a new GCU (Generator Control Unit) to provide start and generator control. This system also makes use of a different starter-generator then those used previously.

This system has two special characteristics:

1 The "STARTER" switch acts like a momentary contact push button, to pull in the self-latching Start Control Relay. This relay stays pulled in until the starter speed sensor signals the GCU ("voltage regulator") to shut off the starter, as engine speed climbs through 44% Ng. There is a manual override, "Start Disengage" push button, that is wired in series with this relay switch circuit, for instant manual shut down of the autostart cycle Normal operation is to push the "Start" switch once, and forget it

2 Starter motor torque (and current drawn) can now be controlled by replacing the series start winding with the shunt "field" winding. Through the shunt "field" winding the GCU can control the field current, and in turn, control the starter current. As the starter motor gains speed, the field current must be weakened to keep up the required starter assist torque through 40% Ng. The GCU uses the starter-generator interpole as a meter shunt, to sense the amount of field excitation current necessary to maintain the starter current at about 300 amps.

During a normal start operation (Battery Master and Fuel Pump "ON"), the right START switch is pressed to initiate the start cycle. This sends about 25 volts from the 5 amp "Right Start Control" circuit breaker through the "Start Disengage" push button switch (normally closed), and on into the GCU on pin "W." The GCU then directs the voltage out on pins "Z" and "H." Voltage from pin "H" pulls in the line contactor which sends battery voltage to the starter. Voltage from pin "Z" pulls in the Start Control Relay, which now "latches engaged" due to the necessity of bypassing the start switch. The Start Control Relay (either left or right) also pulls in both the left and right starter solenoids (180 amp and 200 amp circuit breaker bridge), to connect the starter-generator line contactor directly to the battery master solenoid.

The (right) Line Contactor supplies battery voltage through the 10 amp "Right Voltage Regulator" circuit breaker, to pin "A" on the GCU By now, the starter has drawn the battery voltage (in an instant) down to perhaps 20 volts The GCU sends nearly the whole 20 volts, that came in on "A," back out on "B." This voltage from GCU pin "B" goes into the starter(generator) on field terminal "A," to produce high field current, and in turn, high starting motor torque. When starter current begins at 1200 amps, current flows from the line contactor through the starter rotor (by way of the commutator and brushes), on through the interpole and ground cable, producing a +10 volt drop, to airframe, nacelle structure ground. This +10 volt interpole voltage goes into the GCU on pin "G." However, the maximum field excitation current that causes high starting torque also generates starter current bucking voltage (back EMF), causing the starter current to quickly drop off

As the starter current falls to 300 amps (through the starter rotor and interpole), the interpole voltage falls to +2.4 VDC (into GCU pin "G"). This signals the GCU voltage regulator to weaken the field current enough to try to maintain 300 amps of starter current. Perhaps 4 seconds into the start cycle, the starter current is down to 300 amps, about the same time the pilot pushes the condition lever forward for turbine light off (ignition). It is necessary for the starter motor to continue driving the lighted turbine up through 40% Ng, to prevent a "hung start" (when Ng fails to increase above 40%).

As the starter motor speeds up through 44 (+ -3)% Ng, its speed sensor probe (new, on the 8012C1 starter generator) generates about .47 VAC 960 cycle (measured with Simpson 260, 2.5 VAC scale) and sends it into the GCU on pins "X" and "Y." At this indication the GCU trips off the Start Control Relay power going out on pin "Z," to automatically shut down the starter. The turbine will then continue spooling up to 52% Ng idle, unaided

Any time the starter generator is spinning at 52% Ng or more, and is not being used as a starter, it behaves as a generator With "no" excitation voltage going into the starter/generator field terminal "A," the spinning rotor will still produce at least one volt DC, at generator terminal "B." This voltage goes through the 10 amp Voltage Regulator circuit breaker and into the GCU on pin "A." The GCU then directs the voltage back out on pin "B" to produce enough field excitation to build the unloaded generator output up to about 30 volts (this quickly pulls down to 28.5 volts, under load).

Under normal operating procedures, the power lever is now moved forward out of the idle detent to produce 68% Ng, before switching on the right generator. Any voltage that goes into the GCU on pin "A," is also jumpered internally back out on pin "V." Selecting "Generator," closes the switch to take voltage out of the GCU on pin "V" and puts it back in, on pins "J" and "U" (a redundant over voltage relay reset voltage supply). If GCU pin "D" senses a generator output voltage (typically 30 VDC) of at least 0.15 VDC **greater** than the battery voltage (typically 24 or 28.5 VDC sensed by the GCU on pin "E"), the 30 volts in on pin "J" is directed back out on pin "H," to pull in the right (starter/)generator Line Contactor.

At this point the right ammeter will indicate a heavy load by the needle moving to the high end When the ammeter comes back down to 100 amps, the start procedure (turning on the left fuel pump, and activating the start switch) for the left engine can be initiated **without** switching off the right generator. This procedure is made possible by the new Electro Delta GCU's (VR2000-013A) which make use of wires that connect pin "S" on each GCU to pin "Z" on the corresponding GCU Therefore when the left engine's start switch is pressed, voltage is sent out to the left start control relay from pin "Z" on the left GCU and also to pin "S" of the right GCU. The input on pin "S" of the right GCU overrides its internal voltage regulator causing it to hold down the right generators output to 300 amps maximum while the left (or second) engine's starter generator is operating as a starter.

NOTE

> With one engine and its generator operating and the other engine shut down (and not in the start mode) it is possible for the 8012C1 starter generators to handle **brief** generator load surges above 300 amps.

Once the second engine (left in this case) is running at 52% Ng (idle), the power lever should be moved forward to produce a minimum of 68% Ng This allows the second engine starter generator to be switched on without stalling the engine. The two overhead ammeters should soon equally share (+ -about 10%) any electrical load, due to the "Equalizer Bus" wire, which runs between pin "K" on one GCU and pin "K" on the other

Each GCU has an internal relay that only pulls in to connect the Equalizer Bus if the GCU is in the generator mode and the starter-generator line contactor is pulled in (power out from pin H). When both Equalizer Bus relays are closed, a 10 ohm resistor inside each GCU, connects the interpole voltage (GCU pins "G") of one generator to the interpole voltage of the other The two 10 ohm resistors form a voltage divider that nudges the voltage regulator of each GCU up or down until the two interpole voltages (and thus, the generator output currents) are close to equal.

Another feature of this system not yet mentioned, is the generator trip function. The generator trip push button switch when activated, sends voltage from pin "V" of a GCU back in on pin "R". This manually trips the GCU's overvolt relay, which in turn trips off the Line Contactor. When this occurs with the overhead switch in the "Generator" position, voltage through the 5 amp (left or right) start control circuit breaker is sent into pin "T" of the GCU to keep the overvolt relay latched in the tripped position. At this point the pilot has manual control and must switch the generator off and then on again to reset the tripped overvolt relay. (This is accomplished every time the engines are started).

11-27c STARTER-GENERATOR OPERATION AND FIELD WEAKENING. (Refer to Figure 11-11a.) Most D C starter motors have a stationery "stator" winding connected in series with the wound rotor. Most D.C. generators have a stationary "field" winding connected in parallel or "shunt with the rotor so the field excitation current may be independantly controlled by a voltage regulator or "generator control unit". Since both starter and generator can use the same rotor, the Cheyenne engines were equipped with a starter generator unit which contains both a series start winding and shunt field generator winding.

A high current generator also requires a series "interpole" stator winding which produces good high current performance, as well as good start performance. By itself, the interpole will not perform sufficiently as a series start winding. Since the interpole does however serve well as a meter shunt, it is used by the GCU to sense generator output current, as during generator paralleling, -0.6 VDC per 100 amps; or during start, +2.4 VDC per 300 amps, to control weakening of field current.

The shunt field winding ***can***, however, serve as the starting stator winding if, ***and only if***, the field current is weakened as the starter comes up to speed. For this reason, the series start coil on the generator at terminal "C" has been removed, along with the heavy gauge wire that fed it. Now the generator line contactor also serves as the (high current) starting contactor

With these changes, the start side of the "starter-generator" switch has been modified to a momentary type that when pressed, applys power to the GCU. The GCU then sends power directly to the line contactor latching it closed as well as directing approximately full battery voltage to the starter-generator terminal "A" (shunt field). As the starter comes up to speed, the GCU weakens the field excitation current, to provide sufficient starter torque, while the lighted turbine is building enough speed to sustain rotation.

Proper control of field current is therefore necessary when the start sequence, is initiated and should be closely monitored to reduce the cost of any malfunction. During the first few seconds of the start phase, field current is needed to.

a Help produce more than the slow rotation that can be accomplished by the interpole alone. (and)

b Generate bucking voltage to quickly reduce the initial thousand plus amps of starter current.

If the "Starter" switch is pressed and current does not flow to the field (due to a broken wire off post "A" of the starter-generator; a blown fuse inside the GCU, off pin "B"; or other reason), the starter could begin to smoke until the "start disengage" button is pressed.

After the initial start phase (within the first three seconds), the GCU begins to weaken the field current. During the period between three and six seconds after pressing the "starter" switch, the GCU provides ***"field weakening"*** to avoid an excessive bucking voltage (back EMF) that would reduce needed starter assistance after turbine ignition. A "hung start" (Ng remaining at 40% or below) might result from no field weakening.

"Field Weakening" starter systems should therefore be carefully monitored as follows:

a Within about five seconds after pressing "starter", ensure that the Ng, quickly accelerates to between 14 and 18 percent If this does not appear likely, press the "start disengage" button ***at once***, to prevent starter overheating from lack of field current.

D180

STARTER MODE

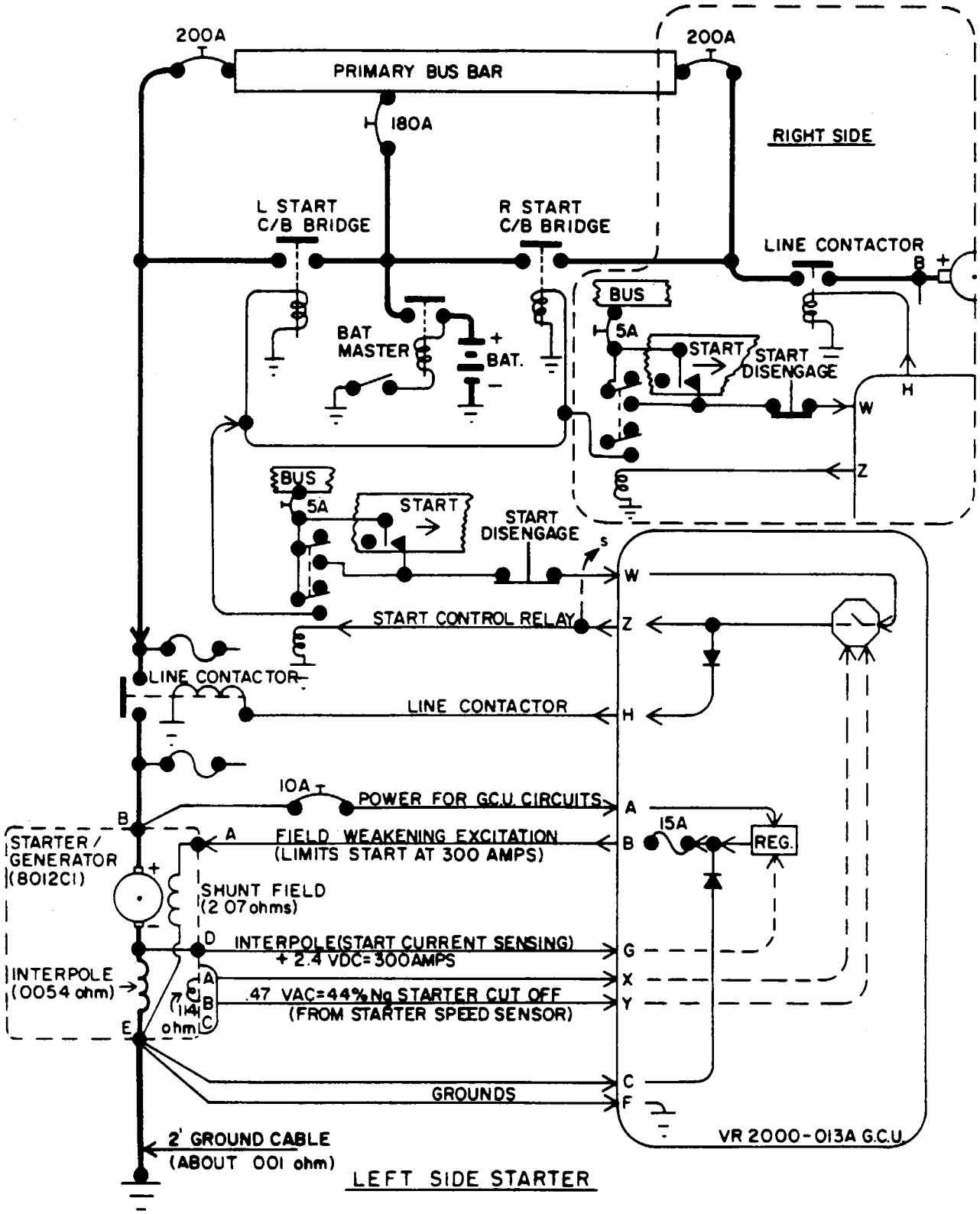

Figure 11-11a Auto Start Electrical Flow Diagram

D179

GENERATOR MODE

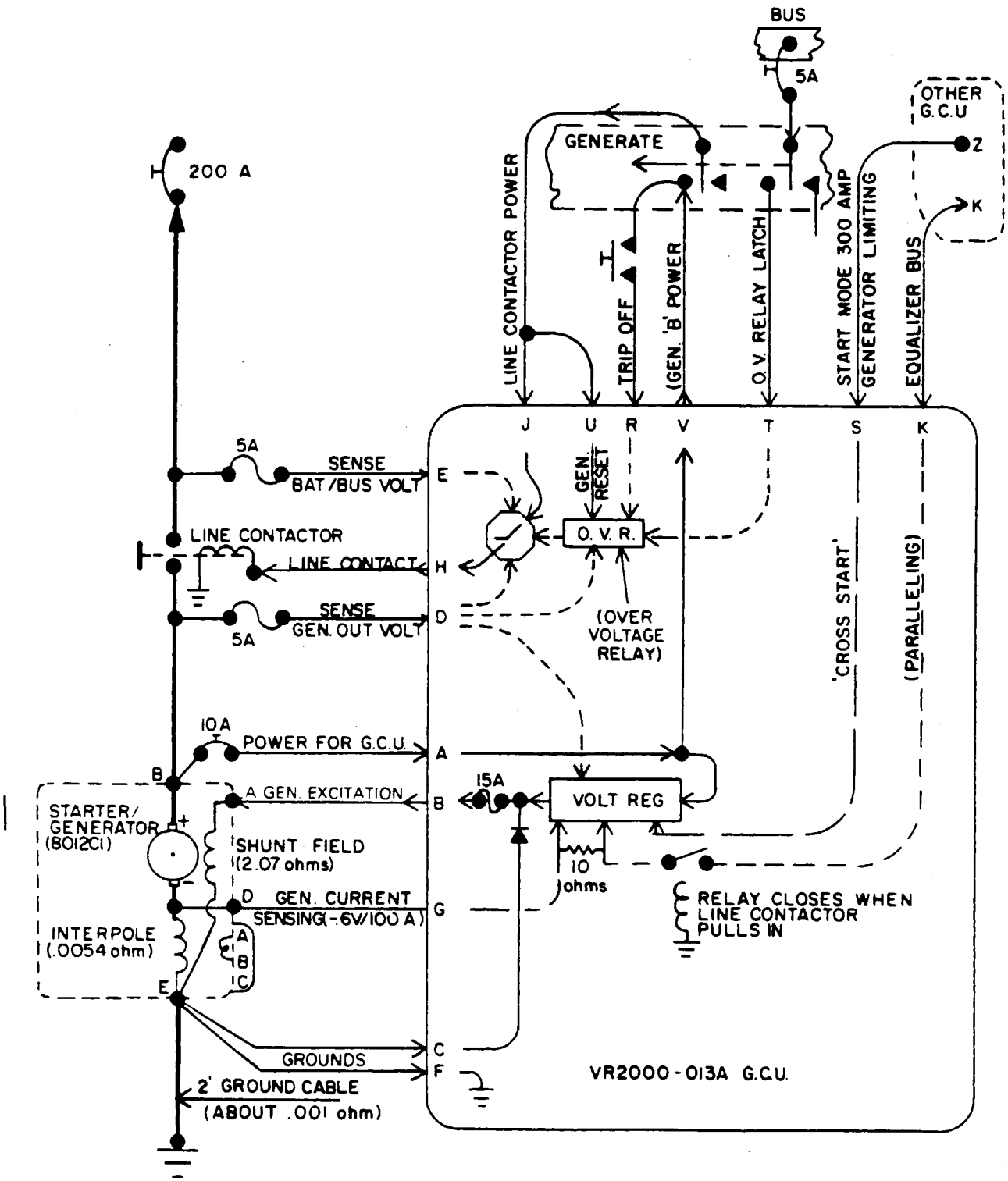

Figure 11-11a Auto Start Electrical Flow Diagram (cont.)

b. When Ng. climbs above 14% (within 4 to 5 seconds) move the condition lever forward, which should result in engine ignition. Should Ng. not appear to prominently accelerate up through 40% within 15 or 20 seconds, pull the condition lever back to idle cutoff. Allow the engine to motor a few seconds for turbine cool down, and press the "start disengage" button.

NOTE

This last description would prevent possible lack of field current weakening from producing an engine overheat condition or "hung start".

c. After the engine has accelerated to about 52%, accelerate the engine to 68% Ng. and switch on the operating engine's generator. Once the generator is on line, it can be ***left on*** during cross, auto starting of the second engine.

11-27d ADJUSTMENTS TO AUTOSTART ELECTRICAL SYSTEMS. (Refer to Figure 11-33.) The only adjustment permitted to the electrical system is that which is necessary to assure proper paralleling of the two starter-generators through their GCU's. Adjustment of each GCU can be accomplished as follows.

a. Start the right engine and after achieving 68% Ng, switch on the right generator. ***Make sure*** the left generator is switched off and pull out the ***10 amp*** "Left Voltage Regulator" circuit breaker.

b. With somebody in the cockpit qualified to operate the controls, take the time used to recharge the battery, and open up the nose baggage area to gain access to the GCU's. Refer to Figure 11-33.

c. Locate the right GCU and ask the operator to switch off the right generator and pull the ***10 amp "Right Voltage Regulator"*** circuit breaker.

CAUTION

If the generator switch and voltage regulator circuit breaker are not pulled prior to continuing, the following instructions could result in spiking the GCU, thus damaging it.

d. Disconnect the harnesses from both GCU's and connect the right starter/generator system harness to the left GCU

e Push in ***only*** the "Right Voltage Regulator" circuit breaker previously referred to. Then switch on the right generator.

f. Carefully insert voltmeter probes into the red (negative) and black (positive) output meter jacks. that are on "top" of the GCU box above the main connector.

g. The voltage set point for the system is 28.5 volts. If the volt reading is within 2 or 3 volts, the GCU can be adjusted. The GCU is adjusted as follows:

1. Remove the rubber cap on top of the box where the output jacks are located.

2 Inside the box is a small screw which is attached to an adjustable pot. Rotate the screw pot clockwise to increase and counterclockwise to decrease generator voltage. Reinstall black cap upon completion.

h. If the system could not be adjusted or it was to far out to begin with, shut down the engine and look for bad cable grounding and continuity as described in paragraph 11-3a, Finding Bad Electrical Connections and Poor Ground Bonding Reperform the previous procedures, and if the GCU still will not adjust the system voltage, replace the GCU

i. If adjustment is complete, switch off the right generator and pull the "Right Voltage Regulator" 10 amp circuit breaker.

CAUTION

Damage may occur to the GCU if the previous instruction is not completed before continuing.

j Disconnect the right generator harness from the left GCU and reconnect both generator harnesses to their appropriate GCU's. Peform the same test for the right GCU.

k. After shut down make sure all appropriate circuit breakers are in.

THIS SPACE INTENTIONALLY LEFT BLANK

11-28. BATTERY. The 24-volt vented nickel-cadmium battery requires little service which is normally limited to checking electrolyte level during each periodic inspection, cleaning the battery box and components when necessary, equalizing the cells when required and occasionally recharging the battery. A battery temperature sensor is connected to the battery to indicate an overtemperature condition on the annunciator panel in the cockpit. See Figure 11-12 for cell layout of battery.

A periodic maintenance program is required to prevent battery failures. The condition of the battery should be determined every 50 to 100 hours initially. Periodic battery check intervals may be varied as service experience dictates by referring to the Battery Service Record (See PA-31T Continuous Inspection Report), which should be maintained for each battery.

For information on battery maintenance, refer to the battery manufacturers maintenance manual. This provides detailed instruction of charging, discharging, cleaning, handling and general troubleshooting and maintenance of the battery The manuals for each manufacturer are as follows: Gulton Battery Corp., Nickel-Cadmium Aircraft Battery Maintenance Manual (P/N 15382); Saft America Inc., Operating and Maintenance Manual (P N DC 3-01-78-3176-5A, or latest revision) and Marathon Battery, Marathon battery instruction manual (P N BA-89). Refer to Section II for a list of addresses on these vendors.

CAUTIONS

Do not use tools, hydrometers, or water that have been contaminated by contact with lead-acid batteries or acid of any kind.

Electrolyte (potassium hydroxide) is very caustic and will burn the eyes, fabric, skin, etc. Neutralize with 3% boric acid and wash with water.

Be very careful when working with uninsulated tools around the battery terminals. This battery can deliver very high currents when shorted. It is advisable to remove finger rings, watches, bracelets, etc when working on the battery, since they may fuse to the intercell straps and cause serious injury. When cleaning the battery, Do Not use petroleum spirits, trichloroethylene or other solvents. Do Not use a wire brush.

This battery must be connected to the air cooling source at all times

NOTE

Keep vent plugs in place during charging and discharging procedures, and at all other times except when inspecting and adjusting electrolyte level Carbon dioxide absorbed from the air forms potassium carbonate in the cell, which reduces the cell efficiency.

11-29. REMOVAL OF BATTERY. The battery is located just behind the nose cone of the airplane.

a. Gain access to the nose cone latching mechanism and unlatch and swing open the nose cone.

b. Cut the two safety wires from large knob on electrical connector.

c. Loosen knob and remove electrical connector from battery.

d. Loosen two camlocks on the bottom front of battery and slide battery forward.

e. Disconnect battery temperature probe wire from the top of battery at inline connector.

f. Disconnect air lines and remove battery from airplane.

g. To gain access to the battery cells, unsnap the four hinge snap locks on the battery cover, lift lid and disconnect fuseholder to remove cover.

11-30. INSTALLATION OF BATTERY.

a. Place battery on mounting bracket and reconnect air lines previously removed.

b. Slide battery back into place and secure with the two camlocks on the bottom front of the battery

c. Connect battery temperature probe wire from the top of the battery at the inline connector

d. Put electrical connector on battery with the + symbols on the connector on top, and the - symbols on the connector on the bottom. Secure by tightening knob to connector.

e. Secure knob by safety wire through the two holes on the knob to the two nuts one each side of the knob.

f. Close nose cone and secure in place by pushing the locking handle up.

11-31. TESTING BATTERY TEMPERATURE SENSOR. The following information should be used to check the temperature sensor operation.

a. Set up a hot oil bath at 130° F. and obtain an ohmmeter.

b. Remove the temperature sensor unit from the battery and disconnect the wire at the fuseholder.

c. Connect the probes of the ohmmeter to the temperature sensor; reading should be approximately zero ohms (short).

d. Submerge the temperature sensor into the hot oil and observe the ohmmeter: an infinite meter reading should be indicated (open) The sensor should reset when removed from the hot oil, after being allowed to cool down to 110° F.

e. With the test completed, reinstall the temperature sensor to the battery and connect the fuseholder. Ascertain that the fuse is installed and in good condition.

11-32. STARTING THROUGH EXTERNAL POWER. The external power receptacle is located on the underside of the nose section below the forward baggage compartment door.

a. Battery master switch must be in the off position.

b. Ascertain that all other electrical equipment in the aircraft is turned off.

c. Insert plug from Auxiliary Power Unit into the external power receptacle located on the underside of the nose section below the forward baggage compartment door.

NOTE

The use of an external battery for starting is not recommended due to the high current draw

d. Monitor aircraft voltmeter, when voltage stabilizes between 28 and 30-volts turn Battery Master Switch ON.

e. Start left engine only, using normal starting procedure as outlined in the Airplane Flight Manual.

f. With left engine operating at ground idle speed, start right engine using normal starting procedure as outlined in the Airplane Flight Manual.

CAUTION

To remove Auxiliary Power Unit plug from the aircraft, approach from the nose of the aircraft. Remain clear of props.

g. With both engines running, disconnect the Auxiliary Power Unit from the aircraft and remove.

11-33. AUTO IGNITION SYSTEM (OPTIONAL).

11-34. DESCRIPTION OF OPERATION. Auto ignition is an available option on all 1981 and later Cheyennes. All Cheyenne ignition switches are a single pole single throw switch, in series with the red condition lever idle cut off position switch. The standard ignition switch positions are labeled "ON" and "OFF." The optional ignition switch on position is labeled "MANUAL," and the off position is labeled "AUTO." The optional "AUTO" off ignition circuit is bypassed to on, any time the starter is energized, and also through a low engine torque sensing switch in series with a squat switch. With the ignition switch in the "AUTO" off position, the ignition will come back on if the starter is switched on, or if the engine torque falls off to a low value, in flight. The low torque switch closes when falling through 400 to 275 ft.-lbs., on a PA-31T and PA-31T1, or when falling through 450 to 317 ft.-lb., on a PA-31T2. The torque switch opens, again, when engine torque rises above 336 to 400 ft.-lb., on a PA-31T and PA-31T1, or above 387 to 457 ft.-lb., on a PA-31T2. The red condition lever will always switch off ignition, in the idle cut off position.

NOTE

Auto ignition is standard on PA-31T1 S/N 31T-8304001 and up.

11-35. REMOVAL OF THE GROUND START RELAYS. The relays are located on relay shelf, aft of the forward baggage compartment on the right side of nose.

a. Remove electrical power by disconnecting battery.

b. Remove access panel on right side of nose between station 35.00 and 46.00. Open forward baggage compartment and remove panel screws from the upper aft panel.

c. Remove forward mounting screws from relay shelf.

d. Disconnect electrical connectors from relay shelf.

e. Remove aft mounting screws, from relay shelf and remove relay shelf.

f. Remove screws from relay shelf cover.

g. Unsolder relay head (identify leads to facilitate installation).

11-36. INSTALLATION OF START RELAYS.

a. Install relay on relay shelf and solder leads to appropriate terminals.

b. Replace relay shelf cover and secure.

c. Position relay shelf on mounting bracket and secure aft screws, then connect electrical connectors, and install forward mounting screws and secure

d. Replace panel in baggage compartment and secure.

e. Replace access panel and secure.

f. Reconnect battery (system check by starting appropriate engine).

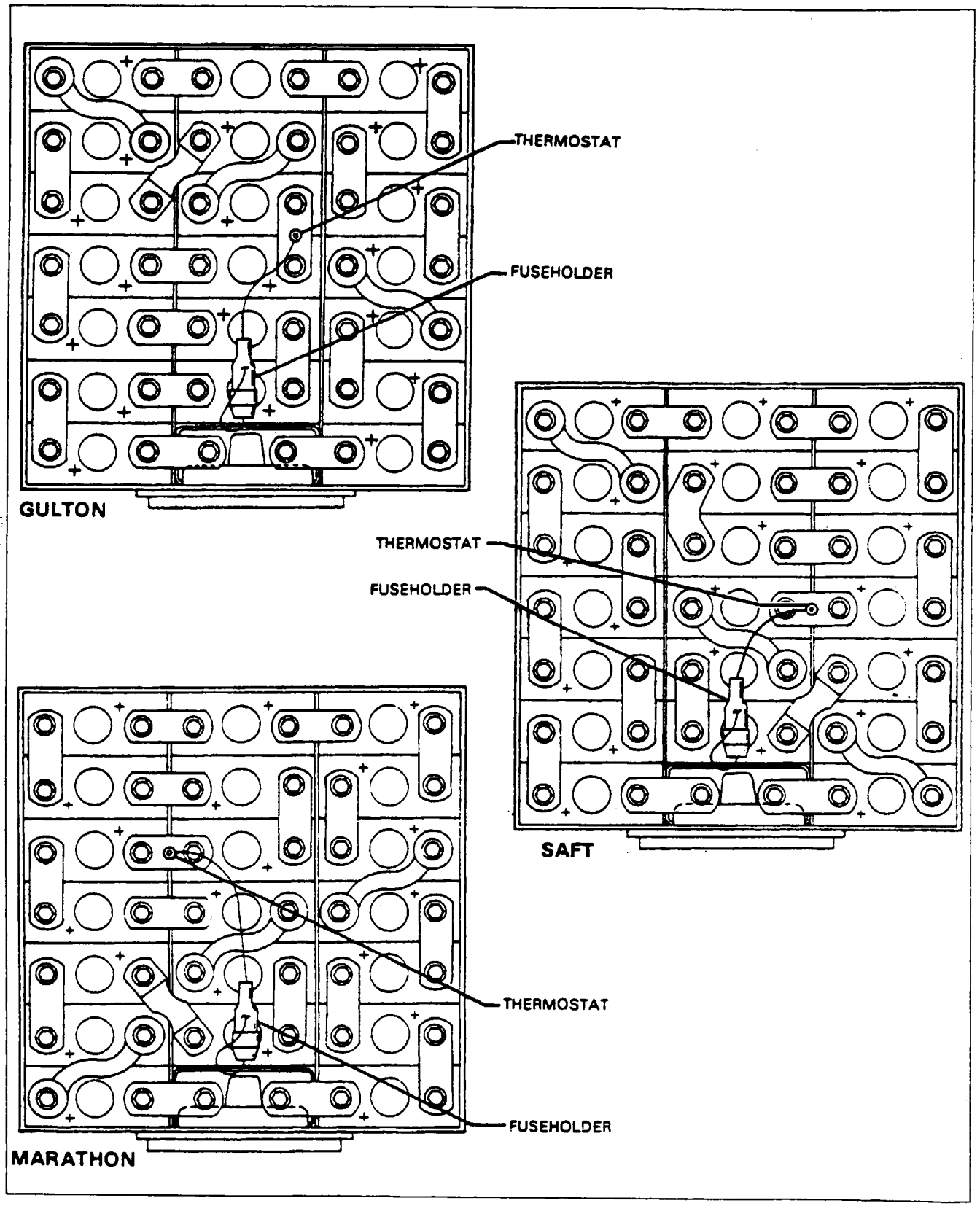

Figure 11-12. Cell Layout—Nickel-Cadmium Battery

11-37. DC CONTROL PANEL.

11-38. DESCRIPTION AND OPERATION. The DC Control Panel is designed to incorporate all the normal features of a 28-volt DC system in one compact unit. By using a comparator amplifier with a regulated reference voltage, any difference between the reference voltage and the generator output, controls the power amplifier stage. The power amplifier stage then controls the shunt field excitation of the generator.

The paralleling portion of the control panel senses the difference between the interpole voltage of the local generator and the equalizer bus. The equalizing circuit is always summing the differential between the voltage across the interpole of the local generator and the equalizer bus to zero.

The automatic line contactor control and reverse current protection consists of two integrated circuits. When the potential difference becomes less than .3-volts, integration occurs and the line contactor closes. When this happens, the circuits automatically shift to sensing reverse current.

DC control panels (PA-31T S/N 31T-8120001 and up, and PA-31T1 S/N 31T-8104001 and up and PA-31T2 S/N 31T-8166001 and up) provide circuit protection, voltage regulation, load sharing. Adjust procedures (refer to Paragraph 11-40).

NOTE

DC control panels used on PA-31T S/N 31T-8120001 and up, and PA-31T1 S/N 31T-8104001 and up, ARE NOT interchangeable with early DC regulators.

11-39. CHECKING DC CONTROL PANEL.

a. Start engines and set to a gas generator RPM of 68%. Turn on all electrical equipment available in aircraft; system voltage must remain at 28.5-volts ± 0.

b. Turn the left Starter-Generator Switch to the off position. This will transfer the full electrical load to the right generator and DC control panel. System voltage must remain at 28.5-volts ± 0.

c Turn the left Starter-Generator Switch to the on position and turn the right Starter-Generator Switch off This will transfer the full electrical load to the left Starter-Generator and DC control panel. The system voltage must remain at 28.5-volts ± 0.

d. If the voltage does not remain at 28.5-volts ± 0, check the generator and battery, making sure they are in good condition. Check all circuit connections and all wiring in the Starter-Generator system for unwanted resistance. Wiring connections should be cleaned and resoldered as necessary. Check voltmeter for accuracy and repeat tests. If system voltage still is not within 28.5-volts ± 0, further check the DC control panel. (See Paragraphs 11-42 and 11-44.)

11-40 ADJUSTING DC CONTROL PANELS The following adjustment procedure covers both the RIGHT and LEFT DC control panels The electrical output from the right engine is utilized when setting either control panel. The DC control panels are mounted on the underside of the left electrical accessory shelf directly above the upper left radio shelf. To gain access to the DC control panels, remove the access plate on the left side of the nose section between sta. 49 60 and sta. 81.00 by turning the screw type fasteners and pull nose bag, locking pins, to release the access plate. Adjust DC control panels as follows:

CAUTION

Before disconnecting DC control panels or reconnecting DC control panels, completely shutdown engine and place starter-generator and battery master switches off.

NOTE

For PA-31T S/N 31T-7400002 to 31T-8020092 and PA-31T1 S/N 31T-7804001 to 8004057, all voltage readings for the following adjustments will be taken from the field terminal of the RIGHT overvoltage relay ONLY. For the following: PA-31T S/N 31T-8120001 and up; PA-31T1 S/N 31T-8104001 and up, and PA-31T2 S/N 31T-8166001 and up. All voltage readings will be taken at the main circuit breaker tie bus, accessible through the outside belly panel. (Use a precision DC voltmeter that has a current calibration.)

a. The balance adjustment is made while operating the RIGHT engine only.

b. Pull out (off) the left generator control circuit breaker.

c. Disconnect the electrical connector (E403) from the left DC control panel. (Refer to Figures 11-30 thru 11-32 for appropriate models components location.)

d. Start the right engine and set to a gas generator RPM of 68%.

e. Turn on landing and taxi lights.

f Using a precision voltmeter, measure the voltage from the field terminal of the right overvoltage relay to airframe ground.

g. Adjust this voltage to read 28.5-volts ± 0 on the voltmeter by the following procedure:

1. Loosen the screw holding the access cover arm in place. This screw is located on the upper left-hand corner on the front of the right DC control panel on Electro Delta pullout rubber protection plug.

2. Insert a small thin bladed screwdriver into the screw recessed in the access hole and adjust the voltage

3. When a 28 5-volt ± 0 reading is obtained on the voltmeter, return access cover arm and secure

h Turn OFF landing and taxi lights.

i Stop right engine.

j. Remove the two mounting screws from the left side of the left DC control panel and also the right rear mounting screw Loosen the remaining mounting screw and angle the connector end of the unit inboard so the right DC control panel harness connector is long enough to reach the left unit. Tighten remaining mounting screw to insure proper case ground.

k. Disconnect the electrical connector (E404) from the right DC control panel and connect it to the left DC control panel.

l. Start the right engine and set to a gas generator RPM of 68%.

m Turn ON landing and taxi lights

n. Using the precision voltmeter, measure the voltage from the field terminal of the right overvoltage relay to airframe ground.

o. Adjust this voltage to read 28.5-volts ± 0 on the voltmeter by the following procedure.

1. Loosen the screw holding the access cover arm in place. This screw is located on the upper left-hand corner on the front of the left DC control panel.

2 Insert a small thin bladed screwdriver into the screw recessed in the access hole and adjust the voltage

3. When a 28 5-volt ± 0 reading is obtained on the voltmeter, return access cover arm and secure.

p Turn OFF landing and taxi lights.

q. Stop right engine and turn Starter-Generator switches and battery master switch OFF.

r Disconnect electrical connector (E404) from the left DC control panel and reconnect it to the right DC control panel.

s. Reposition the left DC control panel on the electrical accessory shelf and secure with appropriate screws

t. Connect electrical connector (E403) to the left DC control panel.

u Disconnect voltmeter leads from circuit wiring. This completes the DC control panel adjustment procedure

v Install access plate on left side of nose section between sta. 49.60 and sta 81.00 and secure with screw type fasteners

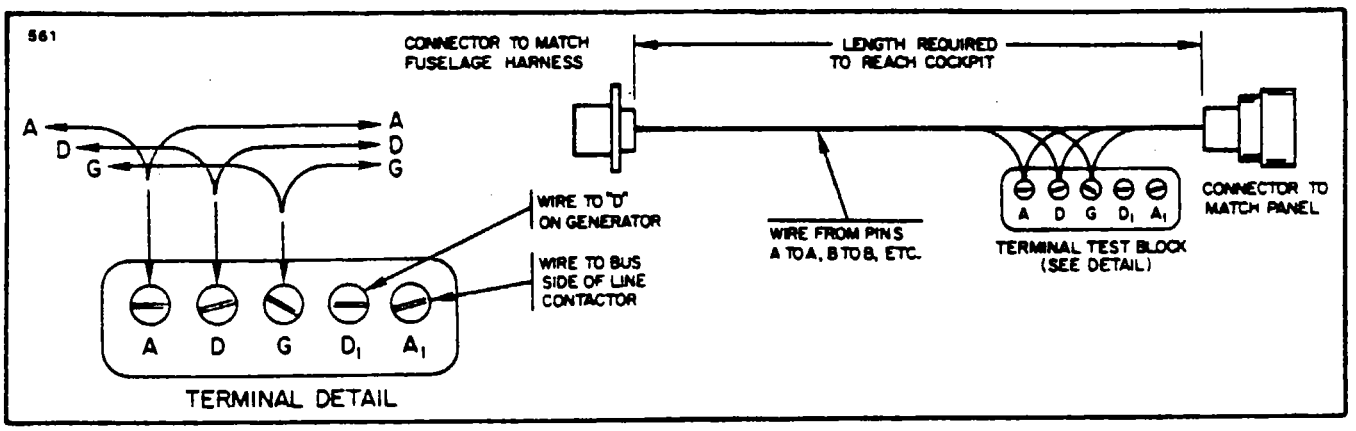

Figure 11-13. Patch Harness

11-41. DC CONTROL PANEL REVERSE CURRENT TEST. The following test will determine if the control panel and or generator contactor are functioning properly to prevent excessive reverse current flow To perform this test a patch harness must be fabricated (refer to Figure 11-13) to allow the control panel (voltage regulator) to be placed in the cockpit along with a precision voltmeter or equivalent.

a. Unplug the fuselage harness from one of the voltage regulators and plug the fabricated test harness into the fuselage harness. Route the test harness into the cockpit.

b Remove the disconnected voltage regulator and place it in the cockpit and connect the test harness to it.

NOTE

The test harness must be long enough to reach the copilots seat.

c Complete the additional connections from the test harness terminal block to the generator and generator contactor of the same side as the voltage regulator removed.

d. With both engines operating and an electrical load of approximately 80 amps, measure voltages at the following terminal block locations.

1. D to G = should be a negative voltage of -.2 to -.4 volts.
2. D1 to G = should be the same as check No. 1 ± .1 volt.
3. A to G = should be approximately + 28 volts
4. A1 to G = should be approximately + 28 volts.

e If A1 to G shows a higher voltage than A to G (more than 1 volt), eliminate the inline fuseholder at the line contactor and recheck voltages.

f. Shut down the engine operating on the test panel. Do not turn off the generator switch Simultaneously monitor voltages at D to G and D1 to G. Voltage at D1 to G should go from a negative voltage and swing to a positive voltage. When the voltage reaches +.4 volts maximum at D to G, the line contactor should open

NOTE

It is very important that there be very little differential between D to G and D1 to G. If more than .1 volt differential exists at line contactor, disconnect and replace the wire from D on the panel to D on the generator

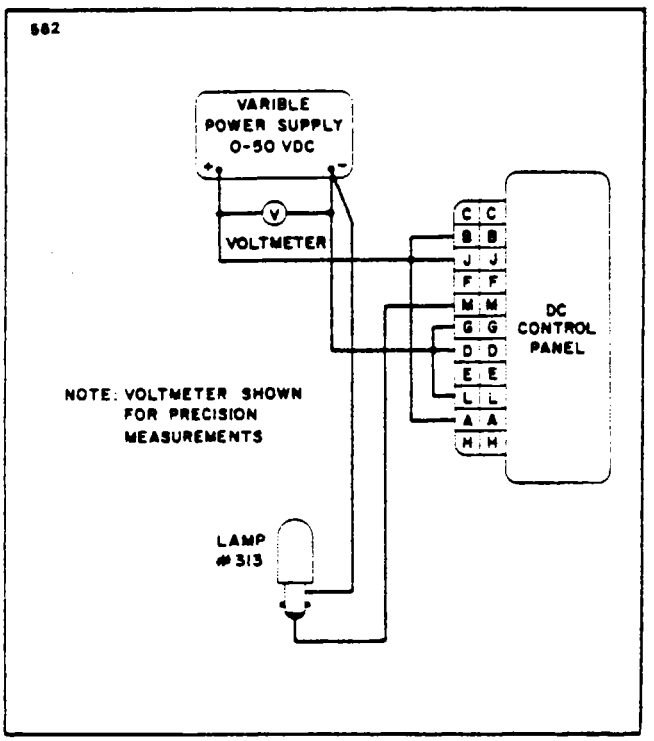

Figure 11-14 Wiring Diagram. Pre-closed Loop Test

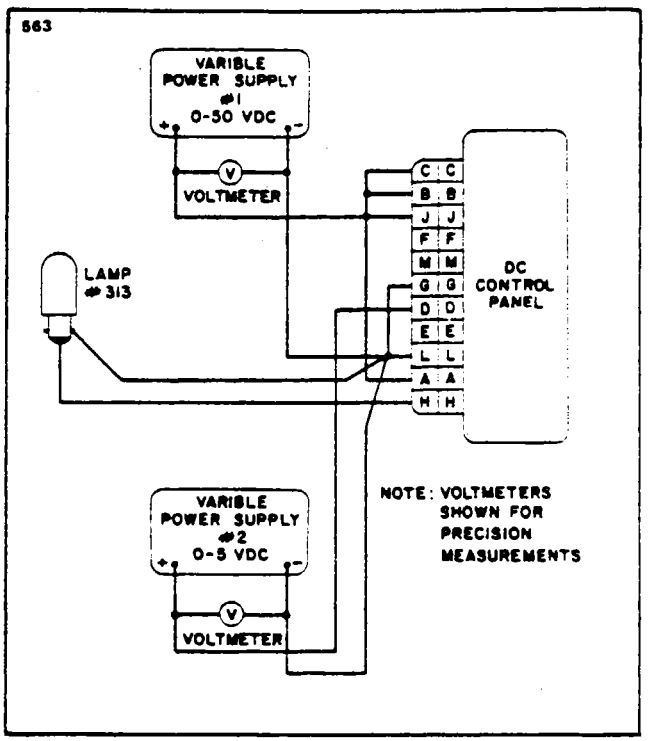

Figure 11-15. Wiring Diagram. Automatic Line Contactor Test

g If the line contactor does not open on reverse current test with +.4 volts on D to G and 27 volt minimum on A to G within 5 seconds the control panel is probably defective and should be replaced

h Shut down the engines and remove test hookups from system.

i Reinstall the voltage regulator and connect the fuselage harness, then remove opposite voltage regulator and repeat steps a thru g

CAUTION

Do not ground fault point A, A1 or Point D, D1 at anytime
Control panel can be permanently damaged

11-42 REMOVAL OF DC CONTROL PANEL The DC control panel is mounted on the electrical accessory shelf located above the upper radio shelf

a Remove the access plate on the left side of the nose between sta. 49 60 and 81 00 by turning the screw type fasteners to release the access plate

b Disconnect electrical plug from the DC control panel (L or R)

c Remove the screws securing the DC control panel to the electrical accessory shelf Remove DC control panel

NOTE

It may be necessary to remove certain radio equipment from the upper radio shelf to gain access to the DC control panels. If removal of radio equipment is required, note the place from which the radio equipment and plugs were removed to facilitate reinstallation.

11-43. BENCH TEST OF DC CONTROL PANEL (LEAR SEIGLER). The connector symbol, J1, used in the following test procedures is for the connector located on the front or face of the unit. The individual pin connections are identified by alphabetical letters. All circuit connections must be clean and tight. If any unit does not pass any of the following tests, the unit must be replaced.

CAUTION

Pin E of DC control panel must not be connected to any test equipment or instruments while performing these tests.

a. Pre-Closed Loop Test: (See Figure 11-14.)

1. Connect a variable DC power supply to the DC control panel. The positive, A+, terminal to connector J1 Pins A, B & J and the negative, A-, terminal to connector J1 Pins D, L & G.

2. Connect one terminal of a lamp, #313, to Pin M and the other terminal to the power supply negative (A-) terminal.

3. Set the DC power supply to 28-volts; the lamp should glow at approximately half brilliance

4. Increase the power supply to 29-volts ± 0.5-volts; the lamp should go out.

b Automatic Line Contactor Test: (See Figure 11-15.)

1 Connect a variable DC power supply to the DC control panel. The positive (A+) terminal to Pins A, B, C & J on connector J1 and the negative (A-) terminal to Pins L & G.

2. Connect a second variable DC power supply to the DC control panel; the positive (A+) terminal to Pin D of connector J1 and the negative (A-) terminal to Pins L & G.

3 Connect a lamp, #313, from Pin H on connector J1 to Pins L & G.

4. Adjust the first power supply to 28-volts. The lamp shall light. Adjust the second power supply to 0.19 ± 0.03-volts. The lamp shall go out. Return the second power supply to 0-volts and the lamp should light.

5 Adjust the first power supply to 10-volts. With the second power supply at 0-volts, the lamp should be dimly lit. Increase the second power supply slowly to 0.12-volts; the lamp will go out

THIS SPACE INTENTIONALLY LEFT BLANK

11-43a BENCH TEST OF DC CONTROL PANEL (ELECTRO DELTA).

NOTE

It is necessary to fabricate test equipment per the following schematic provided by Electro Delta Inc. (Figure 11-15a.).

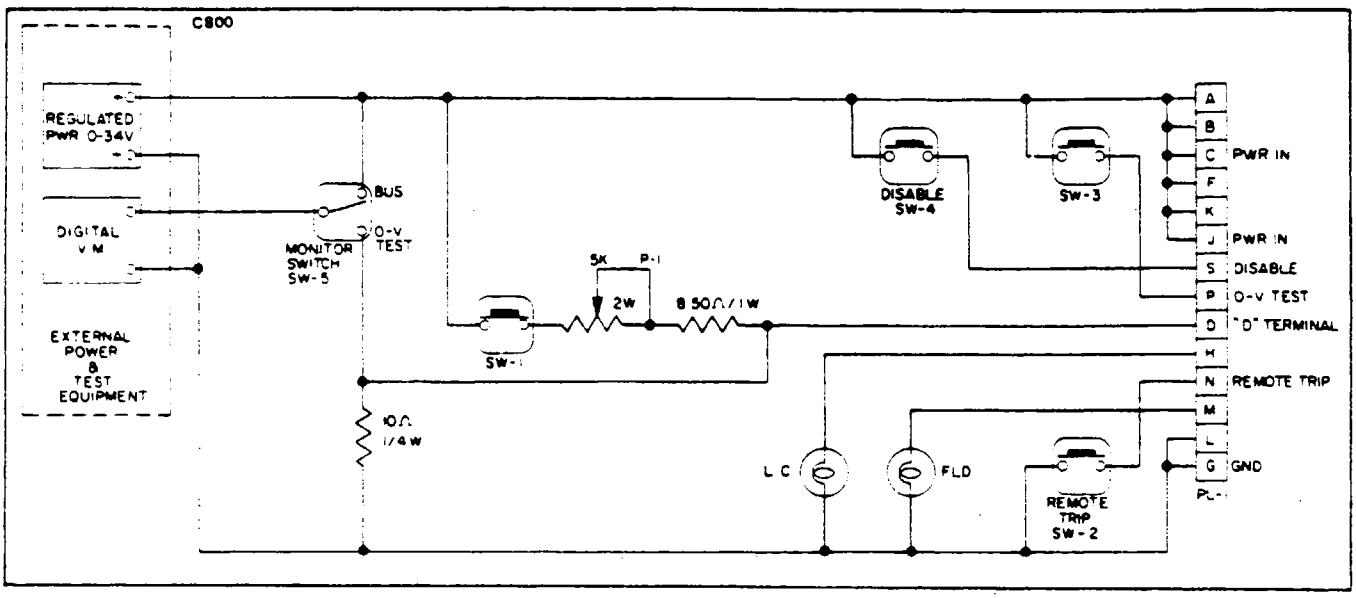

Figure 11-15a. Electro Delta Wiring Diagram

a A digital voltmeter and regulated D.C. power supply are required for the following tests.

b With external regulated power supply set at -0 V.D.C. and digital voltmeter set to read 0-33 V D C. actuate "MONITOR" switch to "BUS" position.

c Plug unit under test into test equipment plug PL-1.

d. Increase power supply output to 28.0 V.D.C. and note both "L.C." and "FIELD" light filaments glow.

NOTE

To properly interpret light bulb indications, it must be realized that full brightness is not required on the "FIELD" light. This bulbs filament will just barely glow red at point of adjustment.

e Increase power supply voltage slowly until "FIELD" light filament just stops glowing. At this point, the D C voltage shall indicate 28.7 to 28.9 V.D.C.

f Continue increasing power supply output slowly to 31.5 V.D.C. and then increase at an even slower rate, verifying the "L.C." light goes out at 32 ± 0.3 V.D.C., indicating an overvoltage trip has occurred.

g. Decrease power supply output to 10 V.D.C., both "L.C." and "FIELD" lights must stay "OUT."

h. Decrease power supply to -0 V.D.C., and then return to 28.0 V.D.C. Verify the "L.C." and "FIELD" again glow, indicating regulation has returned.

i. Depress "0" voltage test switch (SW-3) and verify both "L.C." and "FIELD" lights extinguish and release "0" voltage test switch.

j. Repeat Steps g and h.

k. Depress "REMOTE TRIP" switch (SW-2), and again verify both "L.C." and "FIELD" lights extinguish.

l. Repeat Steps g and h.

m. Depress "DISABLE" switch (SW-4), and observe ONLY THE "FIELD" LIGHT FILAMENT GOES OUT - HOLD DISABLE SWITCH DEPRESSED, and reduce power supply to 13 ± 0 V.D.C. "FIELD" light must remain out.

n. Release "DISABLE" switch, and readjust power supply to -0 V.D.C. and back up again to 28 V.D.C.

o. Actuate "MONITOR" switch (SW-5) to "D" terminal position.

p. Set D.C. voltmeter range for 0-2 V.D.C. and DEPRESS AND HOLD SW-1 switch and set potentiometer P-1 for a reading of 0.18 ± 0 V.D.C.

q. Release switch SW-1 for 2-3 SECONDS, and re-activate switch SW-1. "L.C." light should extinguish AFTER A SLIGHT DELAY.

r. This completes the bench test. If unit fails tests, it must be replaced with a new unit.

11-44 INSTALLATION OF DC CONTROL PANEL.

a. Position the DC control panel on its proper place on the electrical accessory shelf. Insert and secure with the appropriate screws.

b. Connect the electrical plug to the DC control panel.

NOTE

If removal of radio equipment from the upper radio shelf was required, reinstall the radio equipment. Reinstall plugs and equipment in their proper place.

c Replace access plate removed from the left side of the nose between sta. 49.60 and 81.00 and secure by tightening the screw type fasteners.

THIS SPACE INTENTIONALLY LEFT BLANK

11-44a. BUS FEEDER CHECK (31T-8120001 and up; 31T-8109001 and up; and, 31T-8166001 and up).

Operational check of the crossfeed power diodes, checking for shorted or open diodes, on the split bus electrical power distribution system. To ensure power distribution is not interrupted due to single generator operation.

11-44b TESTING FOR OPEN DIODES.

a. With both engines running (approximately 68% N) turn battery master switch and both generator switches on.

b. Open left generator bus tie circuit breaker (200 amp) and turn off generator switch.

c. No power should be lost from any sub-bus (left main, right main or avionics bus).

d. If power is lost on any of these buses: a bus feeder diode from the right side has failed open and must be replaced; if not, proceed to Step e.

e. Reset left generator bus tie circuit breaker (200 amp) and turn on left generator switch

f. Open right generator bus tie circuit breaker (200 amp) and turn off right generator switch.

g. Same result as Step c

h. Same as Step d, a bus feeder diode from the left side has failed open and must be replaced.

i. This completes "open diode test."

j. Shut right engine down, turn off right generator switch and proceed to "shorted diode test."

11-44c. TEST FOR SHORT DIODE.

a. Left engine running at (approximately 68% N).

b Battery master switch on, left generator switch on.

c. Right generator bus tie circuit breaker pulled.

d. Open right main and number 1 avionics circuit breaker on left generator feed bus.

e. Right main bus and avionics buses should be dead (no electrical power). If either bus is powered, the bus feed diode from the right side (left main) is shorted and must be replaced if not, proceed to Step f.

f Reset right main bus circuit breaker open in Step e.

g Avionics bus should be dead (no electrical power) if the avionics bus is powered, the bus feed diode from the right side (right main) is shorted and must be replaced, if not proceed to Step h.

h Open the right main circuit breaker that was reset in Step f (ascertain that avionics bus tie circuit breaker is in).

i. Reset the avionics No. 1 circuit breaker that was open in Step d.

j Right main bus should be dead (no electrical power) if right main bus is powered, the bus feeder diode from the right side (avionics No. 2 bus) is shorted and must be replaced. If not proceed to Step k.

k. Reset all circuit breakers.

l. Start right engine.

m. Shut left engine down.

n. Repeat above procedure for right side.

11-45. OVERVOLTAGE CONTROL.

11-46. PURPOSE AND OPERATION. The overvoltage control is used to protect electrical circuits and electronic equipment from excessive voltage in the event of a charging circuit malfunction. The overvoltage control consists of a mechanical relay and a solid state triggering device. The solid state triggering device activates the mechanical relay when the voltage reaches a preset value, thereby, opening the relay and disconnecting the field circuit of the starter-generator. The relay contacts will remain open until the starter-generator (L or R) is turned off.

11-47. OVERVOLTAGE RELAY OPERATIONAL CHECK. This check should be accomplished at each 500-hour inspection per the following instructions: Access to the overvoltage relay is through the access panel on the left side of the nose between sta. 49.60 and 81.00. The overvoltage relay is mounted on the electrical accessory shelf.

a. Pull all circuit breakers to the out (OFF) position except the left and right voltage regulator (10 amps) and left and right generator field (5 amps).

b. Obtain a variable DC voltage power supply and set to zero output.

c. Disconnect the aircraft lead from the "B" terminal on the starter-generator and connect the power supply positive lead to the aircraft lead removed from the starter-generator "B" terminal. Connect the power supply negative lead to aircraft ground.

d. Turn the left starter-generator switch to the GENERATOR position. Battery master switch is in the off position. Turn off all bus tie switches.

e. Obtain a voltmeter and set it to 50-volts DC. Connect the positive lead of the voltmeter to the output (FIELD) terminal of the left overvoltage relay. Connect the negative lead of the voltmeter airframe ground.

f. Increase the output voltage of the variable DC power supply until the left overvoltage relay trips out. (An audible click will be heard when the relay operates and the voltmeter reading must be zero.) Record the power supply voltmeter reading which was indicated just prior to the overvoltage relay operating. The voltage must be between 31.5-volts to 32.5-volts.

g. Reduce the power supply to zero. Turn the left starter-generator switch off. Another click will be heard when the overvoltage relay resets itself for normal operations.

h. Connect power supply to right starter-generator as in Step c and repeat Steps e thru g for right side.

NOTE

These units are not adjustable. Replace the overvoltage control if it does not test to specifications.

11-48 REMOVAL OF OVERVOLTAGE RELAY. The overvoltage relay is located on the electrical accessory shelf located above the upper radio shelf.

a. Remove the access plate on the left side of the nose between sta. 49.60 and 81.00 by turning the screw type fasteners to release the access plate.

b. Remove the two wires attached with screws.

NOTE

Make note of the place from which the electrical leads were removed to facilitate reinstallation.

c. Remove the two screws securing the overvoltage relay to the electrical accessory shelf. Remove overvoltage relay

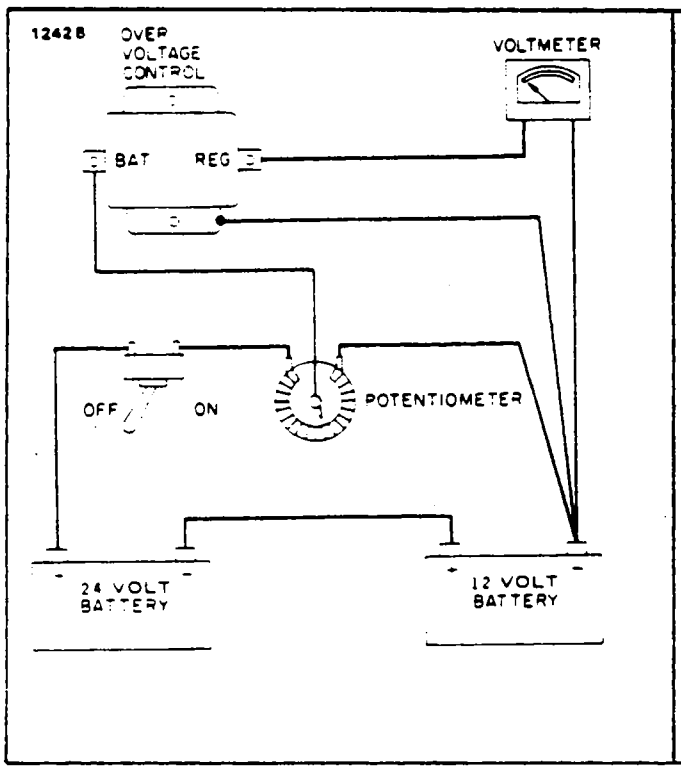

Figure 11-16. Wiring Diagram. Test of Overvoltage Relay

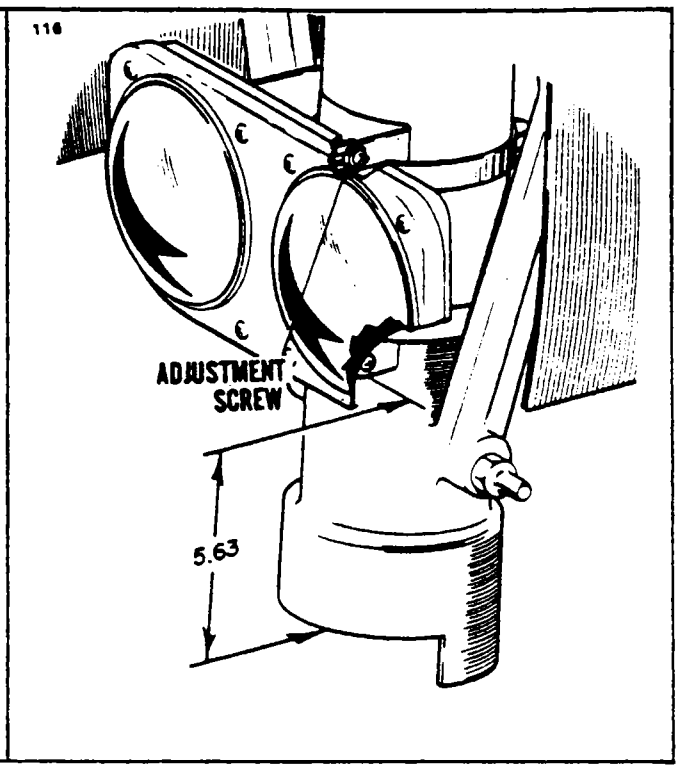

Figure 11-17. Landing and Taxi Lights

11-49. BENCH TEST OF OVERVOLTAGE RELAY.

a. Connect the relay as shown in Figure 11-16

b Use a 100 ohm potentiometer of 15 watt rating, or more, to adjust the voltage.

c The voltmeter is used to read the voltage until the relay opens at which time the voltmeter reading will drop to zero.

d. Overvoltage relay must open when voltage reaches between 31 5 to 32.5-volts at 75°F

NOTE

These units are not adjustable. Replace the overvoltage control if it does not test to specifications.

11-50 INSTALLATION OF OVERVOLTAGE RELAY

a Place the overvoltage relay in place on the electrical accessory shelf and secure with the appropriate screws

b Connect the two wires in their correct position and fasten with the appropriate screws.

c Replace the access plate and secure with the screw type fasteners.

11-51 OVERLOAD SENSOR.

11-52 DESCRIPTION OF OVERLOAD SENSOR The overload sensor is designed for remote sensing of overloads in the aircraft electrical system If an overload should occur in the electrical system, the overload sensor through a slaved mechanical switch, would open the generator field control circuit breaker. There is one overload sensor for each starter-generator

11-53 REMOVAL OF OVERLOAD SENSOR. The overload sensor is located aft of the engine (L or R) in the engine nacelle.

a. Gain access to the overload sensor by removing the access plate, which contains the air conditioning condenser vent, secured with screws.

b. The overload sensor is on the top left-hand corner of the aft fire wall.

c. Remove the 6 electrical leads from the overload sensor.

NOTE

Make note of the place from which each electrical lead was removed to facilitate reinstallation.

d. Remove the two screws securing overload sensor to aft fire wall. Remove overload sensor.

11-54. INSTALLATION OF OVERLOAD SENSOR.

a. Position the overload sensor in place on the top left-hand corner of the aft fire wall and secure with the two screws previously removed.

b. Connect in their correct position the 6 electrical leads previously removed.

c. Replace and secure access cover with the appropriate screws.

11-55 ELECTRICAL SWITCHES AND CIRCUIT BREAKERS.

11-56 DESCRIPTION OF OVERHEAD SWITCHES. These switches are located on electroluminescent panels mounted in royalite trim panels. They are located centrally above the windshield and on the cockpit ceiling. The switches are of the rocker type.

11-57 REMOVAL OF OVERHEAD SWITCHES.

a. Ascertain that the two starter-generator switches and the battery master switch are in the OFF position.

b. Remove the screws securing the electro-luminescent panel containing the switch to be serviced.

c. With the electro-luminescent panel unfastened from the royalite trim panel, it is now possible to gain access to the switch mounting clip at the back of the panel.

d. Working from the rear of the switch, insert a narrow, thin bladed screwdriver between the top of the switch and the mounting clip, disengage the clip from the switch. Also, do the same at the bottom of the switch and mounting clip.

CAUTION

Use caution when working on the switches and panels that other parts and wiring are not damaged.

e. Remove the various electrical leads from the switch. Remove the switch.

NOTE

Make note of the place from which the electrical leads were removed to facilitate reinstallation.

11-58. INSTALLATION OF OVERHEAD SWITCHES.

a. Install the switch in the electro-luminescent panel from the back end of the panel by inserting a narrow, thin bladed screwdriver between the top of the switch and the mounting clip to help engage the prongs on the switch body into the clip. Attach the bottom of the switch by the same procedure.

NOTE

The mounting clip has two positions built into it for positioning the switch. Be sure both upper and lower prongs on the switch body are in the same position on the clip.

b. Connect the various electrical leads to their correct positions on the switch.

c. Install the switch panel into the royalite trim panel and secure it in place with the appropriate screws.

d. Check the operation of the new switch to determine correct installation and operation.

11-59. DESCRIPTION OF CIRCUIT BREAKER AND SWITCH PANEL. There are two circuit breaker and switch panels installed in PA-31T airplanes. The left circuit breaker and switch panel contains circuit breakers for the left engine and the electrical system. The right circuit breaker and switch panel contain circuit breakers for the right engines, radio equipment, and various electrical systems applying to the right side. The circuit breakers are of the manual reset type and must be pushed to be reset after being tripped. The switches are toggle type and are used for disconnecting the various buses from the system.

11-60 REMOVAL OF CIRCUIT BREAKERS. (Wired Type)

a. Ascertain that the two starter-generator switches and the battery master switch are in the OFF position and remove the padded trim panel mounted below the circuit breaker and switch panel assembly.

b. Remove the mounting screws on the face of the circuit breaker panel and pull the panel out slightly to gain access to the screw and nut which connect the wire to the electroluminescent panel at the middle of the mounting bracket.

CAUTION

Disconnect the battery. Use caution when working on circuit breakers so that other parts and wiring are not damaged.

c. Remove the knurl nut from the face plate of the circuit breaker panel on the particular circuit breaker to be removed.

d. Disconnect the electrical lead secured with a screw from the circuit breaker.

NOTE

Make note of the place from which the electrical lead was removed to facilitate reinstallation.

e. Remove screw securing circuit breaker to bus bar. Remove the circuit breaker from the rear of the panel.

11-61. INSTALLATION OF CIRCUIT BREAKERS. (Wired Type)

a. Position the circuit breaker in place and secure to bus bar with appropriate screw.

b. Connect the electrical lead in its proper place and secure with screw.

c. Insert circuit breaker into its proper hole and secure with knurl nut to face plate.

d. Connect the wire from the electroluminescent panel at the middle of the mounting bracket with the appropriate screw Push the panel back into place and secure with the appropriate mounting screws on the face of the panel.

e Check the operation of the new circuit breaker to determine correct installation and operation.

11-62. REMOVAL AND INSTALLATION OF PLUG-IN CIRCUIT BREAKERS. Plug-in circuit breakers can be identified by the absence of retaining nuts on the front of the panel. Ascertain that the two starter-generator switches and the battery master switch are at "OFF," and release the padded side trim from beneath the circuit breaker and switch panel assembly.

a. Release the electroluminescent panels by removing the attaching hardware (including two cap nuts securing the middle of the upper right forward panel).Disconnect the wires connected to the rear of the panels and lower the panels clear of the circuit breakers.

b Release the panel retaining the circuit breakers by removing the thru screws securing it in place.

c. After removing the circuit breaker retaining panel, the faulty circuit breaker may be pulled from the assembly and replaced by a new one.

d. Replace, in reverse order, all items removed in the preceding steps.

11-63 REMOVAL AND INSTALLATION OF TOGGLE SWITCHES The procedures for access to, and replacement of, toggle switches associated with wired-in circuit breaker panels, is similar to the procedure for that of wired-in circuit breakers given in Paragraph 11-60 and 11-61.

11-64 OIL COOLER SYSTEM

11-65 DESCRIPTION The oil cooling system is comprised of a motor to raise or lower the oil cooler door, a limit switch to sense the position of the oil cooler door; an overhead panel switch with three positions, labeled OPEN and CLOSE with the middle position off; and an indicator light to indicate when the door is completely open Oil temperature should be monitored during engine operation and the proper oil cooler door position should be sent accordingly. There are two of these systems, one for each engine For adjustments, removal and installation instructions, refer to Section VIII or Section VIIIA.

11-66 REMOVAL OF OIL COOLER DOOR INDICATOR LIGHTS. The oil cooler door indicator lights are located alongside the overhead switch panel.

a. Ascertain that the two starter-generator switches and the battery master switch are in the off position

b Remove the screws securing the royalite trim panel to which the overhead switch panel is mounted and let hang from the ceiling

c Unsolder or cut the electrical leads to the indicator light.

NOTE

Make note of the place from which each wire was removed to facilitate reinstallation.

d Push the indicator light out of the panel by pushing on the back of the indicator light

11-67 INSTALLATION OF OIL COOLER DOOR INDICATOR LIGHTS.

a. Insert the indicator light into its proper slot on the trim panel by pushing on the front of the indicator light until it is in the correct position.

b. Solder the electrical leads to their proper place on the indicator light.

c. Install the royalite trim panel and secure with the appropriate screws.

d. Check the operation of the new indicator light to determine correct installation and operation. The indicator light is push-to-test type.

11-68 DEICER SYSTEM.

11-69 DESCRIPTION AND OPERATION. For a complete description and troubleshooting procedures for the deicer system, refer to Section XIV, paragraph titled Propeller and Engine Air Inlet Lip Deicing System. In the following paragraphs are removal and installation instructions for the various electrical components of the deicer system.

11-70. REMOVAL OF DEICER CONTROL RELAYS. These relays, left and right power control and motor control relays are located on the relay shelf mounted on the roof of the nose between sta. 49.60 and sta 81 00. Gain access to the relay shelf as follows:

a. Release the access plate on the right side of the nose section by turning the screw type fasteners

b. Loosen the hose clamps at each end of the muffler assembly. Remove the muffler assembly.

c Release the royalite cover on the relay shelf by removing the attaching hardware securing it in place

The left and right power control relays are the larger pair of relays with the wire harness secured with terminal screws The left power control and motor control relays are located in the right side of the relay shelf and the right power control and motor control relays are on the left side of the shelf. Identify the relay (L or R) by the codes on the wires connected to the relay. (See Section XV for index to the schematics.) Removal of the relays (L or R) is as follows:

a Disconnect the wiring from the relay (soldered or screw terminal). Tag wiring to aid in future reinstallation.

b Release the relay by removing the two securing screws. Noting the location of the relay just removed will facilitate proper reinstallation.

11-71. INSTALLATION OF POWER CONTROL RELAYS.

a. Position the relay (L or R) on the shelf and secure with appropriate screws.

b. Connect the 7 wires to their proper terminals with the appropriate screws

c. Check the operation of the new relay to determine correct installation and operation.

1. Turn on ice protection switch.
2 Push in ground test switch.
3 Relay should actuate causing timer to start cycling and deicers to heat.

d Replace royalite cover and secure with the four screws previously removed.

e. Replace the muffler assembly and secure with hose clamps previously removed.

f. Install access plate and secure with the screw type fasteners

11-72. INSTALLATION OF MOTOR CONTROL RELAYS.

a. Position the relay (L or R) on the shelf and secure with the appropriate screws.
b. Solder the 7 wires to their proper terminals on the relay (L or R).
c. Check the operation of the new relay to determine correct installation and operation of the relay
   1. Turn on ice protection switch.
   2. Relay should actuate causing the ice deflector door to open.
d. Replace royalite cover and secure with the four screws previously removed.
e. Replace the muffler assembly and secure with hose clamps previously removed.
f. Install the access plate and secure with the screw type fasteners.

11-73. REMOVAL OF DEICER TIMER. The deicer timer (L or R) is located on the electrical accessory shelf between sta. 49.60 and sta. 81.00.

a. Remove the access plate on the left side of the nose between sta. 49.60 and sta. 81.00 by turning the screw type fasteners to release the access plate.
b. Disconnect the electrical plug from the top of the timer (L or R).
c. Remove the 4 screws securing the timer to the shelf. Remove the timer.

11-74. INSTALLATION OF DEICER TIMER.

a. Position the deicer timer on the electrical accessory shelf and secure with the 4 screws previously removed.
b Connect the electrical plug to the top of the timer.
c. Check the operation of the new timer to determine correct installation and operation See Section XIV, paragraph titled Timer Test.
d Install the access plate and secure with the screw type fasteners.

11-75 LANDING, TAXI AND WING ICE INSPECTION LIGHTS.

11-76 DESCRIPTION These lights consist of two 250 watt lamps which are located on a mounting fixture secured to the nose gear oleo strut housing. Both lamps are used for landing and one is used for taxiing. The landing light switch turns on both lamps while the taxi light switch turns on just the one light. Both lamps are protected by a 20 amp circuit breaker to a solenoid for each light. The landing and taxi lights are also controlled by the position of the nose gear through a series of switches. When the nose gear is up, the lights cannot be turned on, or if left on, they are turned off.

The wing ice inspection light, consists of one 50 watt lamp, located on outboard side of left nacelle and protected by a 5 amp circuit breaker. All switches are located on the overhead switch panel.

11-77. REMOVAL OF LANDING AND TAXI LIGHT. (Refer to Figure 11-17).

a Ascertain the circuit breaker is off before doing any work on the landing or taxi lights.
b To remove either lamp from the mounting fixture, remove the screws from the front of lamp attachment plate and remove the attachment plate from the mounting fixture.

CAUTION

When removing the attachment plate, use caution not to drop the lamps.

c. Disconnect the electrical leads from the desired lamp.

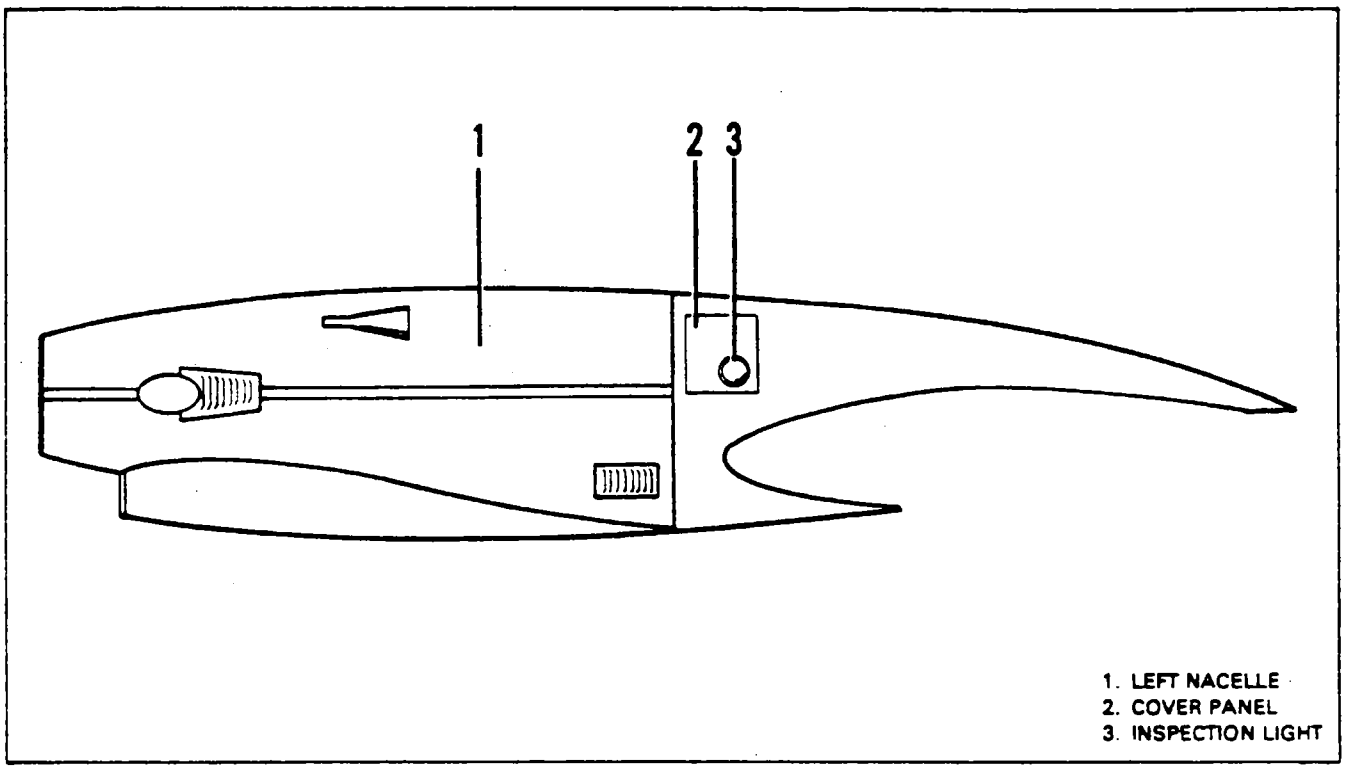

Figure 11-18. Wing Inspection Light

INTENTIONALLY LEFT BLANK

NOTE

Make note of the place from which each electrical lead was removed to facilitate reinstallation.

d. To remove the complete assembly from the gear strut, disconnect the electrical leads from both lamps and release the clamps that secure the assembly to the strut housing.

11-78. ADJUSTMENT. There are two adjusting screws on the sides of the mounting pad at the top. These may be loosened and the entire light assembly tilted to the desired angle.

11-79. INSTALLATION OF LANDING AND TAXI LIGHT.

a. Reconnect the electrical leads to their proper place on the lamps.

b. Place the lamp or lamps against the mounting pad and position the attachment plate and secure with the appropriate screws.

NOTE

Tighten the screws just enough to allow the lamps to fit snug in the mounting fixture.

c. Install the landing light assembly against the strut housing with the bottom of the mounting fixture 5.62 inches up from the bottom of the strut housing. (Refer to Figure 11-17.)

d. Align the bracket longitudinally and secure in place with the clamps.

11-80. REMOVAL OF THE WING ICE INSPECTION LIGHT. (Refer to Figure 11-18.)

a. Ascertain the circuit breaker is off.

b To remove light assembly, remove cover panel screws.

c. Remove electrical leads.

d. Remove screws securing lamp in mounting bracket.

11-81. INSTALLATION OF THE WING ICE INSPECTION LIGHT.

a Position lamp in mounting bracket and secure with screws.

b. Reconnect electrical leads.

c Position cover panel on nacelle and secure with screws.

11-82 POSITION LIGHTS.

11-83. DESCRIPTION. There are three position lights in the system; one on each wing tip tank and one on the tail. They are controlled by a single switch in the cockpit.

11-84. REMOVAL OF WING POSITION LIGHTS. The wing position lights are located on the outboard side of the wing tip tank.

a. Remove the screw securing the lens retainer and remove lens retainer.
b. Remove the lens and bulb.

11-85. INSTALLATION OF WING POSITION LIGHTS.

a. Install the lens and bulb.
b. Install lens retainer and secure with appropriate screw.

11-86. REMOVAL OF TAIL POSITION LIGHT. The tail position light is located on the tip of the tail.

a. Remove the screws securing the lens retainer and remove the lens retainer.
b. Remove the hub and lens.

CAUTION

Be careful not to damage the strobe lamp located in the same assembly with the position light.

11-87. INSTALLATION OF TAIL POSITION LIGHT.

a. Install the bulb and lens.
b. Replace the lens retainer and secure with appropriate screws.

11-88. STROBE LIGHTS.

11-89 DESCRIPTION. There are three strobe lights installed on this aircraft. One on each wing tip and one on the tail assembly. There is a separate power supply for each light assembly. A single ON/OFF switch and circuit breaker is used to provide protection and control for all three power supplies. Should service be required on the units, refer to the appropriate removal and installation instructions in the following paragraphs to gain access to said units.

11-90 REMOVAL OF WING TIP STROBE LIGHT. The lights are located on both wing tip tanks next to the position lights.

a. Remove the screw securing the lens retainer and remove lens.
b. Remove the three screws mounting the light assembly from the wing tank tip.
c. Pull out the light assembly with strobe light and position light still attached.
d. Disconnect three pin connector to strobe light.
e. Cut the plug off the three wires and discard.
f. Pull strobe lamp out of light assembly and discard with the wires still attached.

11-91. INSTALLATION OF WING TIP STROBE LIGHT.

a. Position strobe light into place on the light assembly and insert the three wires connected to it through the hole provided on the light assembly.
b. Insert the three wires into the three pin plug and secure. Wire plug according to schematic diagram given at the end of this section.
c. Reconnect the three pin connector to the harness from the strobe power supply.
d. Position the light assembly on the wing tip tank.
e. Secure with the appropriate screws the light assembly with the strobe light and position light attached.
f. Replace the lens and lens retainer and secure with the appropriate screw.

11-92. REMOVAL OF TAIL STROBE LIGHT. The tail strobe light is located on the tip of the tail in the tail navigation light assembly.

a. Remove the screws securing the lens retainer and remove lens retainer and lens.
b. Remove the position light bulb and keep.
c Remove screws securing the bottom fairing and lower just enough to gain access to the two plugs connecting the strobe power supply to the rest of the system.
d. Disconnect the two plugs and remove bottom fairing with the strobe power supply still attached.
e. Disconnect the two pin connector from behind the light assembly.
f. Pull the light assembly out from the tail and discard.

11-93 INSTALLATION OF TAIL STROBE LIGHT.

a. Place the new strobe light assembly on the tail.
b. Reconnect the two pin connector. (With two blue wires attached.)
c. Position the bottom fairing into place, leaving enough room to gain access to the two plugs connecting the strobe power supply to the system and connect them.
d. Secure the bottom fairing into place with the appropriate screws.
e. Insert the position light bulb previously kept.
f. Replace the lens and lens retainer and secure.

11-94 REMOVAL OF WING TIP STROBE POWER SUPPLY. The wing tip strobe power supplies (L or R) are located just inside the outboard wing rib.

a Remove the access panel on the bottom of the wing just inside wing sta. 239.00.
b The power supply (L or R) is located inside the outboard wing rib. Disconnect the two electrical plugs
c. Remove the screws mounting the power supply to the wing. Remove power supply.

11-95 INSTALLATION OF STROBE WING TIP POWER SUPPLY.

a Position the power supply in place and secure with the appropriate screws.
b Connect the two electrical plugs.
c. Install the access panel on the bottom of the wing inside wing sta. 239.00.

11-96 REMOVAL OF TAIL STROBE POWER SUPPLY. The tail strobe power supply is located on the bottom tail fairing.

a Remove screws securing the bottom tail fairing and lower it just enough to gain access to the two plugs connecting the strobe power supply to the rest of the system.
b. Disconnect the two plugs and remove bottom fairing with the strobe power supply still attached
c. Remove the screws securing the power supply to the bottom tail fairing. Remove power supply

11-97 INSTALLATION OF TAIL STROBE POWER SUPPLY.

a Position the power supply in place on the bottom tail fairing and secure with the appropriate screws.
b Position the bottom fairing into place, leaving enough room to gain access to the two plugs and connect them
c. Secure the bottom fairing into place with the appropriate screws.

11-98. REMOVAL OF TIP TANK RECOGNITION LIGHT.

a. Remove the screws securing the light assembly to the wing tip tank.
b. Pull the cone out enough to disconnect the electrical wiring to the light.
c Remove the attaching hardware that secures the light in position.
d Replace light and install in reverse order of removal instructions.

11-99. TROUBLESHOOTING. The strobe light assembly functions as a condenser discharge system. A condenser in the power supply is charged to approximately 450-volts DC; then discharged across the xenon flash tube at intervals of approximately 50 flashes per minute. The condenser is parallel across the xenon flash tube which is designed to hold off the 450-volts DC applied until the flash tube is triggered by an external pulse. This pulse is generated by a solid state timing circuit in the power supply.

When troubleshooting the strobe light system, it must first be determined if the trouble is in the flash tube or the power supply. Replacement of the flash tube will confirm if the trouble is in the flash tube or the power supply. Replacement of the flash tube will confirm if the tube is defective. A normal operating power supply will emit an audible tone of 1 to 1.5 KHz. If there is no sound emitted, check the system according to the following instructions. When troubleshooting the system, utilize the appropriate schematic at the back of this section.

a. Ascertain the input voltage at the power supply is 28-volts.

CAUTION

When disconnecting and connecting power supply input connections, do not get the connections reversed. Reversed polarity of the input voltage for just an instant will permanently damage the power supply. The reversed polarity destroys a protective diode in the power supply, causing self-destruction from overheating of the power supply. This damage is sometimes not immediately apparent, but will cause failure of the system in time.

When disconnecting the power supply, allow five minutes bleed down time before handling the unit.

b. Check for malfunction in interconnecting cables.

1. Ascertain Pins 1 and 3 of interconnecting cable are not reversed.

2. Using an ohmmeter, check continuity between Pins 1 and 3 of interconnecting cable. If a reading is obtained on the meter, the cable is shorted and should be replaced.

NOTE

A short of the type described in Steps 1 and 2 will not cause permanent damage to the power supply, but the system will be inoperative if such a short exists. Avoid any connection between Pins 1 and 2 of interconnecting cable as this will discharge the condenser in the power supply and destroy the trigger circuit.

c. Check interconnecting cables for shorts.

1. Disconnect the output cables from the power supply outlets.

2. The following continuity checks can be made with an ohmmeter.

3. Check for continuity between the connectors of each interconnecting cable by checking from Pin 1 to Pin 1, Pin 2 to Pin 2 and Pin 3 to Pin 3. When making these checks if no continuity exists, the cable is broken and should be replaced.

4. Check continuity between Pins 1 and 2, 1 and 3, and 2 and 3 of the interconnecting cable. If continuity exists between any of these connections, the cable is shorted and should be replaced.

11-100. WING STROBE AND POSITION LIGHTS. (PA-31T S/N 31T-8120001 and up and PA-31T1 S N 31T-8104001 and up and PA-31T2 S N 31T-8166001 and up.)

On the aircraft listed above, the wing strobe and position lights are located in the same unit. This assembly consists of a red or green position light on the front of the assembly and a white light on the aft side. The strobe light is located in the middle of the assembly. The position and strobe lights are controlled by a separate switch located on the overhead panel. There is a separate power supply for each wing strobe light assembly and circuit breakers provide overload protection. Should service be required on the units, refer to the appropriate removal and installation in the following paragraphs.

11-101 REMOVAL OF WING STROBE AND POSITION LIGHT ASSEMBLIES. (PA-31T S N 31T-8120001 and up and PA-31T1 S N 31T-8104001 and up and PA-31T2 S N 31T-8166001 and up.)

CAUTION

Be careful when removing lens retainer screws, the retainer holds three lens. Take care not to drop lens.

a. Remove screws securing the lens retainer and remove the lens for lamp replacement.
b. Remove the three screws mounting the light assembly to wing tip.
c. Disconnect the two and three pin connector to remove assembly.

11-102. INSTALLATION OF WING STROBE AND POSITION LIGHT ASSEMBLY.

a Reconnect the two and three pin connector.
b Position light assembly on the wing tip and secure light assembly with the appropriate screws
c Replace the lens and lens retainer and secure with appropriate screws.

11-102a. LOGO LIGHTS: Are located on the upper side of the left and right stabilizer for vertical tail illumination. The circuit consist of two 75 watt light assemblies, protected by a 7½ amp circuit breaker and controlled by a switch mounted on the overhead switch panel.

NOTES

1. Handling lamp with bare finger will deposit skin oil on lamp. Remove before illumination of lamp, by cleaning lamp with a grease-free solvent such as acetone.

2. Prior to checking lamp, place lens cover over light assembly for eye protection.

3. When adjusting light assembly turn lamp switch off, allow time for cooling, reflector and lamp become extremely hot.

11-102b. LOGO LAMP REPLACEMENT.

a. Remove lens screw and lens cover.

b. Remove bulb.

c. Install new bulb, place lens cover over light assembly, apply electrical power and turn on logo light switch and check for proper illumination of lamp.

d. Place logo light switch in off position, secure electrical power to aircraft, and secure lens cover with appropriate screw.

11-102c. LOGO LIGHTS ADJUSTMENTS. (Refer to figure 11-18a.) The logo lights are adjustable horizontal and vertical to illuminate the vertical tail section of aircraft.

a. Remove cover lens screw and lens.

b. Loosen locking clamp retainer screws to rotate reflector forward or aft as required.

c. Loosen the reflector screws on.yoke assembly to adjust up and down as required.

d. Place lens cover over light assembly, apply power to aircraft and turn on logo light switch. Proper adjustment is even light coverage of vertical tail section.

e. Place logo light switch in off, prior to securing light assembly, or readjusting light assembly.

f. Remove lens cover and tighten base locking clamp retainer screws and tighten yoke assembly reflector screws. Reinstall lens cover and secure with appropriate screw.

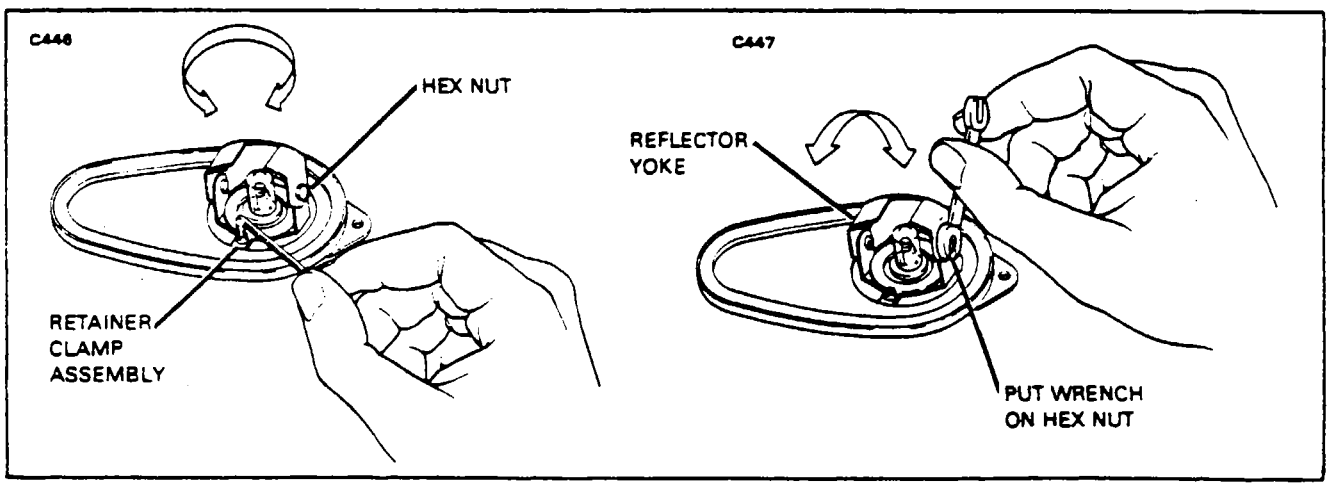

Figure 11-18A. Logo Light Assembly Adjustments

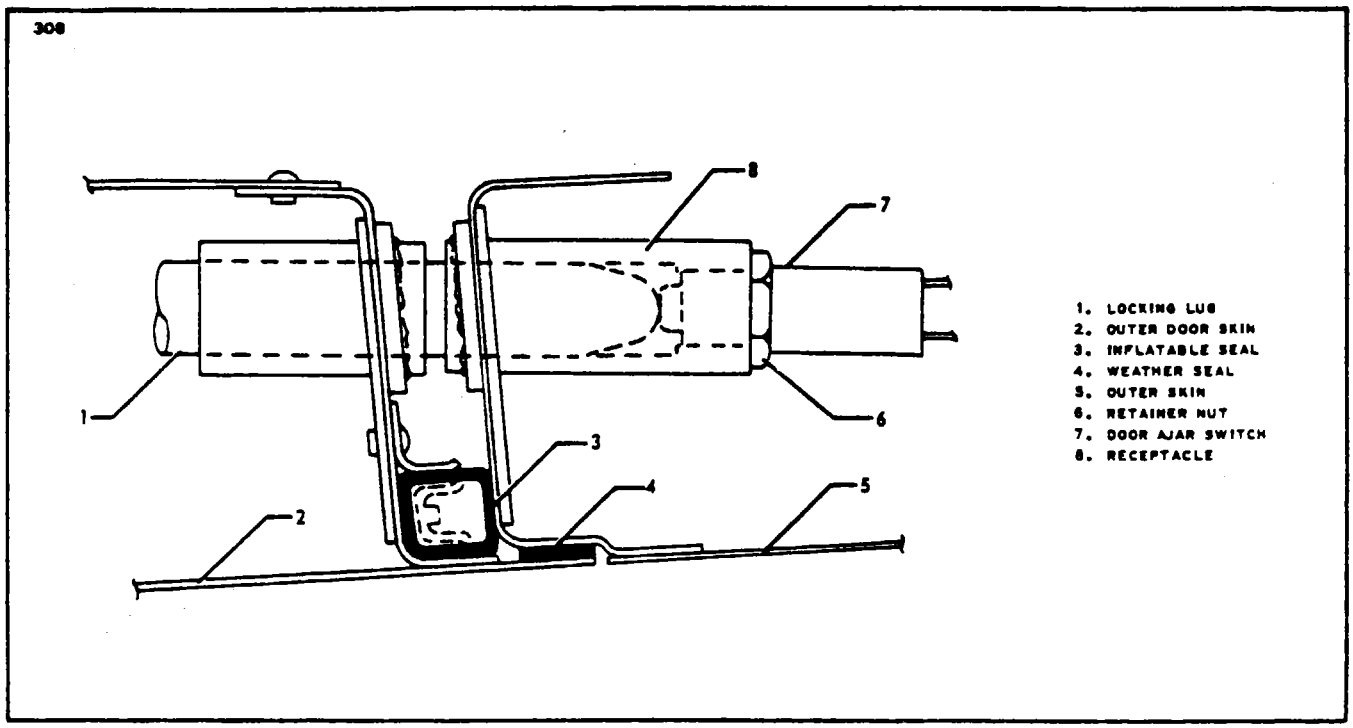

Figure 11-19. Door Ajar Switch

11-103 DOOR AJAR SWITCHES.

11-104. DESCRIPTION. (Refer to Figure 11-19 and Sections XV, XVA - Electrical Schematics.) There are seven switches wired in parallel located in the cabin door channel; three on each side and one on top. These switches are adjusted to sense the insertion of the door plungers in their receptacles in the locked position. If any one of the switches is out of adjustment, and the circuit is completed, the cabin door ajar light will stay on. The lower forward switch is a two pole switch. The purpose of these switches is to independently provide ground to the warning light assembly should any one of the locking pins not engage properly. In addition to these mechanically operated switches, there is also a pressure operated switch located in the line leading to the door seal from the accumulator tank. This also will trigger the cabin door ajar light when the pressure in the door seal falls below 12 psig. (Refer to Section XIII or XIIIA, paragraph titled Door Seal System.) On all 1981 models and up, only one (1) door ajar indicator switch is used.

11-105. REMOVAL OF DOOR AJAR SWITCHES.

a Remove the interior trim panel from around the door frame.

b. Disconnect the electrical leads from the switch.

NOTE

Make note of the place from which each wire was removed to facilitate reinstallation.

c Loosen the retainer nut and unscrew the switch from the receptacle. Remove the switch.

11-106. INSTALLATION OF DOOR AJAR SWITCHES.

a. Install new switch into latch receptacle located behind the door frame.

b. With the door closed and locked, screw the switch into the receptacle until the switch actuates. (To the off position.)

NOTE

An ohmmeter or continuity tester can be used to indicate switch actuation.

c Secure the switch in this position with the retainer nut.

d. Connect the wires to their proper place on the switch.

e Install the interior trim panel around the door frame.

11-107 ADJUSTMENT OF DOOR AJAR SWITCHES. Due to the fact that there are seven switches wired in parallel, each one will have to be checked and adjusted separately. This can be accomplished by jumping the wires at the switches not being adjusted.

a. Before adjusting the switches, ascertain that all the locking pins are adjusted in accordance with Section IV, paragraph titled Adjustment of Door Latch Mechanism.

b Remove the interior trim panel from around the door frame.

c. With the door closed and locked, screw the switch into the receptacle until the switch actuates

NOTE

An ohmmeter or continuity tester can be used to indicate switch actuation.

d When adjustment is satisfactory, tighten the retainer nut on the switch If several switches are being adjusted, follow the same procedures for each switch.

e Install the interior trim panel around the door frame.

11-108 INTERIOR LIGHTS.

11-109 REMOVAL OF DOME LIGHT.

a. Remove the four screws securing the dome light assembly in the headliner

b Let the light assembly hang from the headliner.

c. From behind the light assembly, remove the light bulb that needs replaced.

11-110. INSTALLATION OF DOME LIGHT.

a. Insert the new light bulb into the socket.

b Position the light assembly in place on the headliner

c. Secure light assembly with the appropriate screws.

11-111 REMOVAL OF OVERHEAD READING LIGHTS. There are four overhead reading lights located above the four forward passenger windows.

a. Placing a flat tool between the trim moulding and plate at the center of the unit, pry the plate out, being careful not to bend it.

b Remove the ground wire from the light assembly and remove the cover over the lamp

c Remove the bulb from the socket.

11-112. INSTALLATION OF OVERHEAD READING LIGHTS.

a. Insert new bulb into the socket.
b. Replace ground wire and replace lamp cover over the lamp.
c. Install the plate into the trim panel moulding and press into place to secure.

11-113. COURTESY LIGHTS. (On Time Delay.)

PA-31T S/N 31T-8120001 and up, and PA-31T1 - 31T-8104001 and up and PA-31T2 S/N 8160001 and up.

11-114. DESCRIPTION OF OPERATION. With the aircraft on the ground and the main cabin door is opened, the courtesy lights system (consisting of two aisle lights, stair lights, and rear exit lights) is automatically turned on. These lights will remain on for twenty minutes and then extinguish. If the operator needs additional time, he must activate the time delay reset switch for an additional twenty minutes. All lights extinguish when cabin door is closed. With the aircraft in flight, the aisle lights and rear exit lights are controlled by the forward and aft exit light switches. There is no time delay circuitry involved. One of the three control switches is located on the forward overhead panel; the remaining two are located aft of the cabin door. (Time delay switch for ground operation only.) The time delay timer is located on the forward electric accessory shelf.) (Refer to Figure 11-31 or 11-32 appropriate model for components location.)

11-115. REMOVAL OF THE TIME DELAY TIMER.

a. Ascertain that power is removed by disconnecting battery.
b. Remove the forward access panel left side.
c. Disconnect electrical connector to time delay timer.
d. Remove screws to the time delay timer and remove.

11-116. INSTALLATION OF THE TIME DELAY TIMER.

a. Position time delay timer on accessory shelf and secure with screws.
b. Reconnect electrical connectors.
c. Replace the forward access panel.
d. Reconnect battery for system operation.

11-117. INSTRUMENT LIGHTS. The switch and circuit breaker panels are of the electroluminescent type. The individual instruments on the instrument panel are lighted by bolt lights. The light intensity of the electroluminescent panels and bolt lights are controlled by solid state dimmers. If necessary to remove the solid state dimmer, use the following instructions.

11-118. DESCRIPTION OF OPERATION FOR THE SOLID STATE DIMMER ASSEMBLY (Earlier Models). The Lamar Solid State Dimmer Assembly is attached to the aircraft electrical supply through the potentiometer. This supply is switched on and off simultaneously with the low voltage control circuit. A switch inside the potentiometer controls this on/off function. When the potentiometer's control knob is turned on, the lighting intensity is very dim. Lighting intensity increases with a clockwise rotation of the potentiometer's control knob The Lamar Solid State Dimmer serves as a release for excess heat generated when the lights are dimmed. The solid state dimmer has a unit ground that connects to the forward overhead bulkhead aircraft ground. A wire leading to the Electro-luminescent Power Supply of the panel lighting system and a wire leading to the various instrument bolt-lights complete the circuits for both standard solid state dimmer assemblies.

11-119. DESCRIPTION OF OPERATION FOR THE SOLID STATE DIMMER ASSEMBLY (Later Models). On these models, the dimmer is controlled by a Bright/OFF/Dim switch located in the overhead switch panel. In the Bright mode, all panel lights are illuminated to full intensity. In the Dim mode, lighting intensity may be controlled by any of four potentiometers (when installed), located in the center of the overhead switch panel. The potentiometers control the lighting for the various panel, avionics and placard lights in the aircraft. The Solid State Dimmer serves as a release for excess heat generated when the lights are dimmed.

11-120. REMOVAL OF SOLID STATE DIMMERS (Earlier Models.) The following procedures apply to both dimmers, the dimmer for the electro-luminescent panels and the dimmer for the instrument lights. The solid state dimmers are mounted behind the overhead switch panel with the variable resistor projecting through the royalite panel.

a. Remove the screws securing the royalite trim panel containing the overhead switch panel and let hang.
b. Remove the knob from the potentiometer which controls the dimmer that is being removed.
c. Remove the nut securing the potentiometer to the front of the panel.
d. Pull the potentiometer out of the overhead instrument panel.
e. Disconnect the red wire from the potentiometer at plug connection.
f. Disconnect white wire from dimmer assembly at plug connection.

NOTE

Make note of the placement of the wires and plugs to facilitate reinstallation.

g. Remove the screws mounting the dimmer assembly to the aircraft. Remove the dimmer assembly and potentiometer from airplane.

11-121. INSTALLATION OF SOLID STATE DIMMERS (Earlier Models).

a. Position the solid state dimmer in place behind the overhead switch panel and secure with the appropriate screws.
b. Connect the white and red wires to the plug connections from which the old assembly was previously removed.
c. Solder the main harness from the dimmer to the potentiometer. Solder the wires in the same position as the old assembly.
d. Insert the potentiometer into its proper place on the overhead trim panel.
e. Install nut on the potentiometer securing it to the front of the panel.
f. Install the knob on the potentiometer.
g. Position the overhead trim panel and secure with the appropriate screws.

11-122. REMOVAL OF SOLID STATE DIMMER (Later Models). The dimmer unit is located behind the right instrument panel on the aft side of the bulkhead at Sta. 81.00. Access to the unit is from beneath the co-pilots instrument panel.

a. Locate the dimmer unit and disconnect the harness connector at the unit.
b. Remove the four screws securing the dimmer unit to the bulkhead.
c. Remove dimmer unit from airplane.

11-123. INSTALLATION OF SOLID STATE DIMMER (Later Models.)

a. Position the dimmer unit in place on the bulkhead at Sta. 81.00 and attach with appropriate screws.
b. Connect the harness connector to the dimmer unit.

11-124. REMOVAL OF DIMMER SLIDE CONTROLS (Later Models). The slide controls are located together in the overhead switch panel.

a. Remove the knobs from the slide controls.
b. Remove the screws securing the placard panel to the switch panel and remove placard panel.
c. Remove the screws securing the royalite trim panel containing the overhead switch panel and let hang.
d. Remove wires from slide control making note of the placement of the wires to facilitate reinstallation.
e. Bend tabs on slide control to allow removal from panel and pull slide control from panel.

11-125. INSTALLATION OF DIMMER SLIDE CONTROLS (Later Models.)

a. Position slide control in overhead switch panel where previously removed.
b. Bend tabs down to secure slide control to panel.
c. Reconnect the wires to the slide control in the same positions as noted when removed from the old assembly.
d. Position the overhead trim panel and secure with the appropriate screws.
e. Attach placard panel to switch panel with screws previously removed.
f. Replace the knob previously removed from the slide controls.

11-126. ADJUSTMENT OF SOLID STATE DIMMER (Later Models). There are four adjusting pots located on the dimmer control box placarded No. 1 thru No. 4. These pots control the lights as follows: No. 1—Co-Pilot's Panel (Right); No. 2—Placard Lights (E/L); No. 3—Radios (Center); and No. 4—Pilot's Panel (Left).

a. Ascertain that all panel lights are connected and the bright/dim switch is selected to the dim position.
b. Set the rheostat controls located on the overhead panel to 1/3 brightness.
c. Adjust the pots to a point where the lights just stop flashing. (If the system is not adjusted properly or there is a short in the light circuit, the entire channel will flash.)

11-127. REMOVAL OF POWER SUPPLY FOR ELECTRO-LUMINESCENT PANELS. The power supply is located behind the overhead switch panel.

a. Remove the screws securing the royalite trim panel containing the overhead switch panel and let hang.
b. The power supply is mounted to the panel. Disconnect the red wire from the plug connection and the white wire from the bombtail.
c. Disconnect the screws securing the power supply to the panel. Make note of the ground wire attached to one of the screws. Remove the power supply.

11-128. INSTALLATION OF POWER SUPPLY FOR ELECTRO-LUMINESCENT PANELS.

a. Position the power supply and secure with the appropriate screws. Be sure ground wire is connected to its proper screw.

b. Connect the red wire at the plug connection from which it was previously removed and secure.

c. Position the royalite trim panel and secure with the appropriate screws.

11-129. TROUBLESHOOTING PROCEDURE FOR THE SOLID STATE DIMMER ASSEMBLIES. When troubleshooting the solid state dimmer assembly, it must first be determined if the trouble is a defective dimmer assembly, or a shorted or open connection in the wiring for the unit. Verify that the proper voltage exists at the dimmer assembly by turning on the map light. If the map light for the appropriate side is working, then the harness wiring is not shorted or opened as far as the bombtail connection near the map light. (See appropriate "Panel Lights Schematic" for wiring details.) If the map light is working, gain access to the dimmer assembly wiring per the instructions in Paragraph 11-120 Removal of Solid State Dimmer. Locate the red wire on the potentiometer and check for 28-volts DC. If voltage is present, then the dimmer assembly may be defective. Prior to replacing the solid state dimmer assembly with another unit, ring out the entire wiring for the system for a possible short. If the wiring is not shorted or open replace the solid state dimmer assembly.

NOTE

If the optional radio lights dimmer needs servicing, refer to the Avionics Wiring Diagram Service Manual for the appropriate wiring information. (See Section XII.)

11-130. ANNUNCIATOR PANEL.

11-131. ANNUNCIATOR CONTROLLER.

11-132. DESCRIPTION OF OPERATION. The annunciator controller is powered through 28 VDC left main bus and the number 2 battery bus. The circuit is protected by 5 amp fuse and 5 amp circuit breaker. The annunciator controller is an integral part of the annunciator display circuit. Each channel of annunciator controller is displayed on the annunciator display panel as a system that is being monitored. The annunciator controller has two adjustment pots, one for each oil temperature indicator. (Refer to paragraph 11-136 for adjustment procedures.) The annunciator controller only activates the master caution warning, should a system failure occur that is essential to flight. (Refer to the appropriate P.O.H. for emergency procedures.)

11-133 REMOVAL OF ANNUNCIATOR CONTROLLER.

a. Located aft of baggage compartment on the right side on nose, accessible through the access panel between station 35.00 and 46.00.

b. Remove electrical power by disconnecting battery.

c. Remove plastic straps that secure connect plugs springs, and disconnect electrical connectors.

d. Remove securing screws and remove annunciator controller.

11-134. INSTALLATION OF ANNUNCIATOR CONTROLLER.

a Position annunciator on bracket assembly and secure with appropriate screws.

b. Reconnect electrical connectors, and secure connect springs with plastic straps.

c. Reconnect battery.

d. Replace access panel and secure.

11-135. ANNUNCIATOR PANEL LAMP REPLACEMENT. The annunciator panel is located on the lower center instrument panel above the pedestal.

a. Remove the two screws projecting from the face of the annunciator panel.
b. Pull the face off the annunciator panel.
c. Remove the particular lamp for replacement by pulling on the lamp.
d. Keep the two wire leads on the new lamp straight and push into place.
e. Push the "Push To Test" switch to check operation of the lamp.
f. Position the face of the annunciator panel and secure with the two screws previously removed.

11-136. ANNUNCIATOR PANEL (OIL TEMPERATURE INDICATOR) ADJUSTMENT PROCEDURE. These adjustments apply to the oil temperature lights only. On early models, the adjustment screws are recessed in the annunciator panel directly above the indicator lights. On later models they are located on the annunciator controller which is mounted on the right upper fuselage between STA. 49.00 and STA. 81.00. They are labeled: left oil temperature and right oil temperature. Adjustments made on aircraft having the annunciator controller will require two people, one in the airplane and one up front at the controller.

a. Remove upper and lower cowlings from both engines.
b. The oil temperature probes are located on the lower, aft, right side of both left and right engines.
c. Locate and remove electrical connectors E116, from the left oil temperature probe, and E217, from the right oil temperature probe.
d. Place a resistive load of 128 ohms across pin A and B of electrical harness connectors E116 and E217. Use a locally fabricated test box (See Schematic, Oil Temperature; Right and Left).
e Ascertain the left fuel flow, left oil temperature, right fuel flow, right oil temperature and the panel circuit breakers are pushed into their ON position.
g. Gain access to the adjusting screws. On earlier models remove the annunciator panel face by removing appropriate screws. On later models, gain access to the controller by removing the access panel between STA. 49.00 and 81.00 on the right side of the airplane.
h. Apply power to the annunciator panel by placing the master switch in the ON position. Observe the needle on both the left and right oil temperature gauges, it should be deflected to the red line near the 100° C position on the gauge.

NOTE

On later models, having the annunciator controller, the master caution button must be depressed to cutout a time delay circuit (3-5 seconds) before any adjustments are made

i. With a small slot head screwdriver, adjust the left channel by turning the left oil temperature adjusting screw clockwise to illuminate the left oil temperature annunciator light. Then turn the adjusting screw counterclockwise slowly until the left oil temperature annunciator light extinguishes. Repeat the first step by turning the adjustment screw clockwise very slowly to illuminate the left oil temperature annunciator.
j. Adjust the right channel in the same manner as the left channel in step i.

NOTE

In order to properly calibrate both channels, it may be necessary to reaccomplish steps i and j several times to achieve simultaneous activation of the oil temperature lights. On aircraft having the annunciator controller, place protective covers over adjustment pots when adjustments are complete.

k. Upon completion of adjustment procedure, decrease the resistive load on the left oil temperature probe harness connector E116 by 3 ohms by pressing the switch on the test box. The left oil temperature annunciator panel light should extinguish. Repeat the same change in resistive load for the right oil temperature probe harness connector E217 and the right oil temperatue annunciator light should extinguish.

l. Place the aircraft master switch in the OFF position and remove the resistive load from both the left and right oil temperature probe electrical harness connectors.

m. Connect electrical connector E116 to the left oil temperature probe and electrical connector E217 to the right oil temperature probe.

n. Install and secure annunciator face plate, on earlier models, or the access panel between STA. 49.00 and 81.00, on later models.

o. Install the left and right engine cowlings and secure.

11-137. NO SMOKING, FASTEN SEAT BELT ANNUNCIATOR.

11-138. NO SMOKING, FASTEN SEAT BELT ANNUNCIATOR LAMP REPLACEMENT. The annunciator is recessed in the cabin headliner.

a. Remove legend plate from annunciator by sliding plate lengthwise from the right side and lifting up on the left side.

b. Remove the particular lamp for replacement by pulling on the lamp.

c. Replace legend plate in reverse manner of removal.

d. Access to wiring on back of annunciator may be gained by removing the small access plate directly aft of annunciator.

11-139. CHIMES, NO SMOKING, FASTEN SEAT BELT ANNUNCIATOR.

11-140. PURPOSE. The chimes assembly give audible tone to draw attention to the annunciator display lights.

11-141. REMOVAL OF THE CHIMES ASSEMBLY.

a. Chimes assembly is located aft of the annunciator display lights in the recess portion of the cabin headliner

b. Remove electrical power by pulling (push/pull) circuit breaker.

c. Remove cover panel screws and remove panel from headliner carefully (the tone speaker is mounted on upper side of panel).

d. Disconnect electrical connectors to chimes assembly.

e. Remove mounting screws and remove chimes assembly (system groundwire is grounded through mounting screw).

11-142. INSTALLATION OF THE CHIMES ASSEMBLY.

a. Position chimes assembly on mounting bracket and secure with appropriate screws and secure groundwire to mounting bracket also.

b. Reconnect electrical connectors.

c. Take care when positioning cover plate in cabin headliner not to pinch speaker wires.

d. Reset (push/pull) circuit breaker.

e. Check chimes assembly by pressing cabin call switch, and seat belts and no smoking switch for operation check.

11-143. STALL WARNING SYSTEM. The stall warning system for the PA-31T and all Cheyennes prior to 1978 is an integrated part of the Stability Augmentation System, therefore, for information regarding the stall warning system, refer to paragraph 11-148. A description of the stall warning system for the PA-31T1 is given below.

11-144. DESCRIPTION AND OPERATION. The stall warning system for the PA-31T1 consists of a lift detector which is electrically connected to a stall warning horn. As stalling conditions are approached, the lift detector will activate the stall warning horn.

The lift detector is located on the leading edge of the right wing. A tab will extend beyond the leading edge at the point where the lift detector is mounted. With the master switch in the ON position; gently lift tab; stall warning horn should activate.

11-145. REMOVAL OF LIFT DETECTOR.

NOTE

The master switch must be off prior to performing any work on the lift detector or warning horn. Place reference marks on holding plate and wing skin for use when reinstalling lift detector.

a. Remove four screws holding the plate around the tab. The lift detector is fastened to this plate; remove the unit from the wing.

b. Mark the electrical wires and terminals to facilitate reinstallation. Remove electrical wires from lift detector; remove lift detector from aircraft.

11-146. INSTALLATION OF LIFT DETECTOR.

a. Attach electrical wires to their correct terminals on the lift detector.

b Position the lift detector with its mounting plate on the wing, determining that the sensor blade drops down freely; secure in position with the four screws previously removed.

11-147. ADJUSTMENT OF LIFT DETECTOR. The lift detector switch is adjusted at the factory when the airplane is test flown, and should not require any further adjustment during the normal service life of the airplane. Should some type of service on the wing require removing the switch, the following instructions will help in positioning the switch at the proper position.

Loosen the two Phillips head screws; one on either side of the vane. If the stall warning comes on too late, move the switch up. If the stall warning comes on too early, move the switch down. Retighten the screws after making any adjustments.

CAUTION

Never try to adjust the switch by bending the vane.

The only way to test the accuracy of the setting is to fly the airplane into a stall condition and NOTE the speed at which the stall warning comes on. The stall should be made with the flaps and landing gear up and power off. It may be necessary to make several test flights and alternate adjustments before the desired setting is obtained. The stall warning should come on not less than five, or more than ten miles per hour before the actual stall occurs.

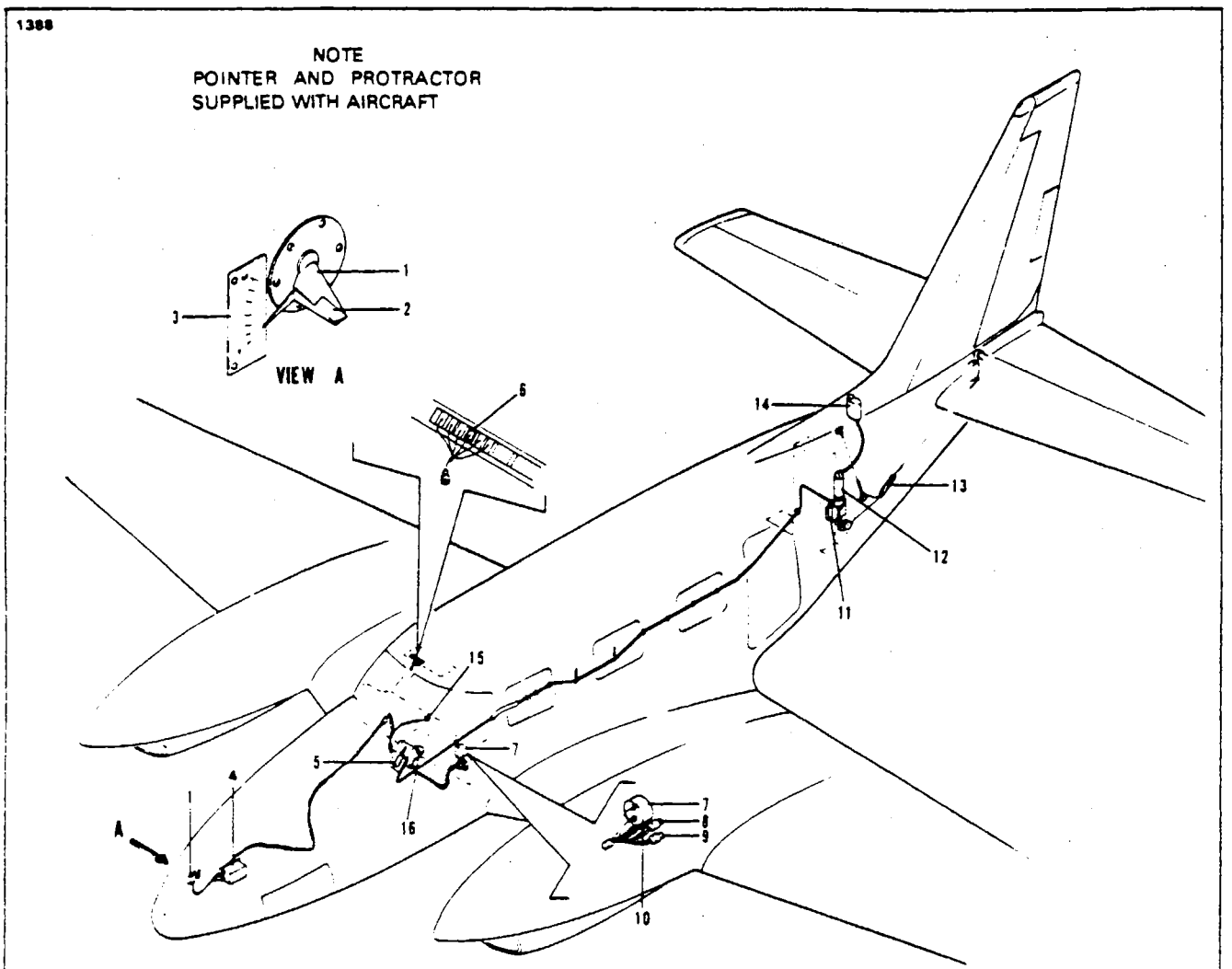

1. ANGLE OF ATTACK VANE (SENSOR)
2. POINTER ASSEMBLY (FOR CHECK PURPOSE ONLY)
3. VANE CALIBRATOR PROTRACTOR (FOR CHECK PURPOSE ONLY)
4. SAS COMPUTER
5. CO_2 CARTRIDGE
6. LEFT PITOT HEAT SWITCH
7. STALL MARGIN INDICATOR
8. POWER WARNING LIGHT
9. RAM WARNING LIGHT
10. SAS TEST SWITCH
11. SAS SERVO MOTOR
12. HYDRAULIC CYLINDER
13. ELEVATOR DOWN SPRING (REPLACE AFTER 2,000 HOURS)
14. HYDRAULIC FLUID RESERVOIR
15. STALL WARNING LIGHT
16. STALL WARNING HORN

Figure 11-20 Stability Augmentation System Layout Diagram

11-148. STABILITY AUGMENTATION SYSTEM.

11-149. DESCRIPTION OF STABILITY AUGMENTATION SYSTEM. The Stability Augmentation System (SAS) consists of four major components, plus a three position test switch. Also incorporated in the system is a power warning light, a ram warning light and a stall warning light and horn. The major components are a Stall Margin Indicator, Computer, Angle of Attack Vane (Sensor) and a Servo Actuator.

The Angle of Attack Vane mounted on the right side of the nose section of the aircraft, senses the angle of attack by the airflow deflecting the vane either clockwise or counterclockwise. This information is fed to the computer. The computed output derived from this information is utilized as follows: 1. To drive the Stall Margin Indicator mounted on the instrument panel which displays the aircraft flight regime as follows: STALL, red area of indicator; STALL WARNING, red and black barber pole area of indicator; 1.3, white area of indicator; CRUISE, green area of indicator. 2. To drive the Servo Actuator which is attached by a cable assembly to the elevator down spring. The elevator down spring is attached to the elevator horn assembly by an additional cable, which provides a variable elevator down spring tension designed to improve aircraft static longitudinal stability. 3. To activate the stall warning light and horn when the aircraft approaches a stall speed situation.

The SAS incorporates a panel mounted, three position test switch, which is spring loaded to the center position. The function of the switch positions are as follows: Far left position labeled 1.0 TEST, to simulate a stall condition; the center position for no test conditions (normal flight position); the far right position labeled 1.3 TEST, to simulate 1.3 times the stall speed with the same configuration and power.

The SAS improves the static longitudinal stability of the Cheyenne thus permitting more versatile loading. Should the SAS malfunction, the panel mounted warning lights will illuminate. If the malfunction is due to a power failure, the power warning light will illuminate. If the malfunction is due to a Computer, Vane and/or Servo Actuator failure, the ram warning light will illuminate. In any event should the SAS fail, the aircraft is equipped with a Stability Augmentor Emergency Override System as standard equipment. The pilot at his discretion can activate this system by pulling the lanyard actuator located on the right side of the pedestal. For additional information on this system, refer to Paragraph 11-169.

11-150. REMOVAL OF COMPUTER. The computer is located under the forward baggage compartment floor between sta. 24.00 and sta. 37.00.

a. To gain access to the computer, open the forward baggage compartment door on the left side of the nose.

b. Remove baggage compartment carpeting from the floor to uncover the access panels.

c. Remove the right and center access panels fastened with screws on the baggage compartment floor between sta. 24.00 and sta. 37.00.

d. The computer is mounted on a longitudinal beam. Disconnect the 2 electrical connectors from the computer.

e. Remove the 4 screws securing the computer to the longitudinal beam. Remove the computer from the aircraft.

11-151. INSTALLATION OF COMPUTER.

a. Position the computer on the longitudinal beam and secure with the 4 screws previously removed.

b. Connect the 2 electrical connectors to the computer and secure.

c. Install the right and center access panels on the forward baggage compartment floor between sta. 24.00 and sta. 37.00 and secure with the appropriate screws.

d. Install the baggage compartment floor carpeting.

e. Close forward baggage compartment door.

f. Check computer for correct installation and operation. (Refer to Paragraph 11-168.)

11-152. REMOVAL OF ANGLE OF ATTACK SENSOR VANE. The sensor vane is mounted on the right side of the nose between sta. 9 and sta. 24.

a. Open the forward baggage compartment door and remove the right side panel in the forward baggage compartment by removing the screws securing the panel to the fuselage.

b From inside the forward baggage compartment disconnect the sensor vane electrical connectors.

c From the right side of the aircraft remove the six screws securing the vane to the aircraft skin.

d Remove the sensor vane from the airplane.

11-153. INSTALLATION OF ANGLE OF ATTACK SENSOR VANE. (Refer to Figure 11-23.)

a Insert the sensor vane into the appropriate cutout in the aircraft skin.

b From the right side of the aircraft secure the vane with the appropriate screws.

c From inside the forward baggage compartment connect sensor vane electrical connections

d Check operation of sensor vane. (Refer to Paragraph 11-168.)

e. Install the right side panel in the forward baggage compartment and secure with appropriate screws

11-154. REMOVAL OF STALL MARGIN INDICATOR. The Stall Margin Indicator is located in the upper left side of the instrument panel structure. The left shock-mounted instrument panel must be removed to gain access to the indicator.

a Unsnap the forward side of the instrument panel cover and slide forward enough to allow it to move from its attachment slot Remove the cover from over the panel.

b Pull the control wheel that is at the opposite side of the instrument panel from where the shock-mounted panel is to be removed, to its aftmost position and secure with a cord tied between the wheel and around the seat back.

c Pad the control wheel tube with foam rubber or similar material

d Remove the four self-locking nuts that secure the floating panel to its shock mounts There is one nut located on each side of the control wheel tube and one nut located at each side of the panel, near the top With an open end wrench held next to the backside of the panel, hold the rubber mounts from twisting as the nuts are being removed

e Pull the panel back and allow it to rest on the padded control wheel tube

f Disconnect the wires from the rear of the Stall Margin Indicator. Identify wires to facilitate reinstallation

g Remove the three mounting screws from around the face of the Indicator, also the bolt light for the Indicator

h Remove the Indicator from the airplane.

11-155 INSTALLATION OF STALL MARGIN INDICATOR.

a Position the Indicator in its proper panel cutout and secure with appropriate screws and install and secure bolt light

b Connect the wires to the Indicator.

c Check operation of Stall Margin Indicator. (Refer to Paragraph 11-168)

d Ascertain that one end of the ground strap is placed over the panel side of the shock mount stud

e Place the floating panel in position and allow the shock mount attachment studs to protrude through the panel Install and tighten attachment nuts.

f Remove the padding and release the control wheel.

g Place the instrument panel cover in its attachment slot and snap fastener to secure cover.

11-156 REMOVAL OF SERVO MOTOR. The Servo Motor is located on the left side of the fuselage aft of the rear baggage compartment

a Remove the access panel on the left side of the fuselage between sta. 274 and sta. 296 by turning the screw type fasteners to release the panel.

b. Remove the screws securing the servo cover to the servo case and remove the servo cover.
c. Disconnect the electrical connector from the servo motor.
d. Loosen the turnbuckle with caution aft of the down spring to release tension on cable attached to servo motor arm. If actuator arm is at upper scribe mark, use caution when disconnecting down spring as additional tension is present.
e. Remove the bolt and nut securing the cable assembly terminal to the servo motor arm.
f. Remove four nuts and bolts securing the servo motor to the bulkhead.
g. Remove the servo motor from the airplane.

11-157. INSTALLATION OF SERVO MOTOR. (Refer to Figure 11-21.)
a. Position the servo motor on the bulkhead and secure with four nuts and bolts previously removed.
b. Insert cable assembly terminal in servo motor arm and secure with nut and bolt previously removed.
c. Adjust turnbuckle aft of down spring as required to obtain a cable tension of 23 ± 1 pound on the cable forward of the down spring. Verify actuator arm is at lower scribe mark and elevator is full down when adjusting cable tension.
d. Connect the electrical connection to the servo motor.
e. Check operation of servo motor. (Refer to Paragraph 11-168.)
f. Install servo motor cover and secure with appropriate screws.
g. Install access plate on left side of fuselage between sta. 274 and sta. 296 and secure with screw type fasteners.

11-158. REMOVAL OF TEST SWITCH. The Test Switch is located in the upper left side of the instrument panel structure. The left shock-mounted instrument panel must be removed to gain access to the Test Switch.
a. Unsnap the forward side of the instrument panel cover and slide forward enough to allow it to move from its attachment slot. Remove the cover from over the panel.
b. Pull the control wheel that is at the opposite side of the instrument panel from where the shock-mounted panel is to be removed, to its aftmost position and secure with a cord tied between the wheel around the seat back.
c. Pad the control wheel tube with foam rubber or similiar material.
d. Remove the four self-locking nuts that secure the floating panel to its shock mounts. There is one nut located at each side of the control wheel tube and one nut located at each side of the panel, near the top. With an open end wrench held next to the backside of the panel, hold the rubber mounts from twisting as the nuts are being removed.
e. Pull the panel back and allow it to rest on the padded control wheel tube.
f. Unsolder the wires from the switch terminals. Identify wires to facilitate reinstallation.
g. Remove the nut securing the switch to the instrument panel.
h. Remove the switch from the airplane.

11-159. INSTALLATION OF TEST SWITCH.
a. Position the switch in its proper panel cutout and secure with nut previously removed.
b. Solder the wires to the correct terminals of the test switch.
c. Check operation of test switch. (Refer to Paragraph 11-168.)
d. Ascertain that one end of the ground strap is placed over the panel side of the shock mount stud.
e. Place the floating panel in position and allow the shock mount attachment studs to protrude through the panel. Install and tighten attachment nuts.
f. Remove the padding and release the control wheel.
g. Place the instrument panel cover in its attachment slot and snap fastener to secure cover.

11-160 REMOVAL OF SAS WARNING LIGHTS. The two warning lights, Ram and Power, are located in

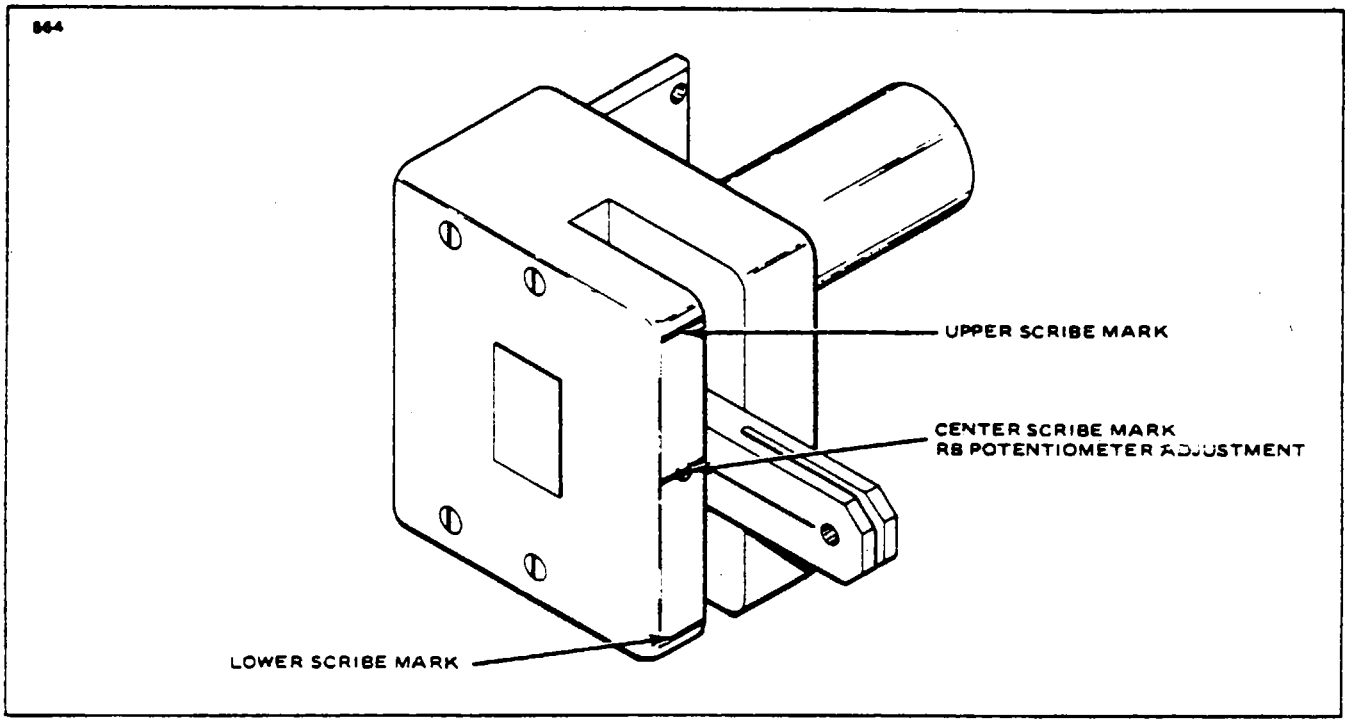

Figure 11-21. SAS Servo Motor

upper left side of the instrument panel structure. The instrument panel cover must be removed if the light assembly is being repaired or replaced.

NOTE

To replace a defective bulb simply unscrew the lens housing and replace the defective bulb.

a. Unscrew the lens housing from the light assembly.
b. Unsnap the forward side of the instrument panel cover and slide forward enough to allow it to move from its attachment slot. Remove the cover from over the panel.
c. Remove the nut securing the light assembly to the instrument panel.
d. From behind the instrument panel structure, pull the light assembly out of the panel.
e. Unsolder the wires from the light assembly. Identify wires to facilitate reinstallation.
f. Remove the light assembly from the airplane.

11-161 INSTALLATION OF SAS WARNING LIGHTS.

a. Solder the wires to the terminals of the light assembly.
b. Install the light assembly in its proper panel cutout and secure with nut previously removed.
c. Install the bulb and lens housing on the light assembly.
d. Check operation of warning lights. (Refer to Paragraph 11-168.)
e. Place the instrument panel cover in its attachment slot and snap fastener to secure cover.

11-162. REMOVAL OF STALL WARNING LIGHT. The stall warning light is located on the top of the instrument panel in front of pilot.

a. Unsnap the forward side of the instrument panel cover and slide forward enough to allow it to move from its attachment slot. Remove the cover from over the panel.

b. Remove the knurled nut securing the stall warning light to the panel.

c. From behind instrument panel, pull stall warning light out of panel.

d. Unsolder the wires from the stall warning light terminals. Identify wires to facilitate reinstallation.

11-163. INSTALLATION OF STALL WARNING LIGHT.

a. Solder the 3 wires to their proper terminal on the light.

b. Insert the light into its proper place on the panel and secure with knurled nut.

c. Check operation of stall warning light. (Refer to Paragraph 11-168.)

d. Place the instrument panel cover in its attachment slot and snap fastener to secure cover.

11-164. REMOVAL OF STALL WARNING FLASHER. The Stall Warning Flasher is located behind the left shock-mounted instrument panel.

a. Unsnap the forward side of the instrument panel cover and slide forward enough to allow it to move from its attachment slot. Remove the cover from over the panel.

b. Pull the control wheel that is at the opposite side of the instrument panel from where the shock-mounted panel is to be removed, to its aftmost position and secure with a cord tied between the wheel and around the seat back.

c. Pad the control wheel tube with foam rubber or similiar material.

d. Remove the four self-locking nuts that secure the floating panel to its shock mounts. There is one nut located on the panel at each side of the control wheel tube and one nut located at each side of the panel, near the top. With an open end wrench held next to the backside of the panel, hold the rubber mounts to eliminate twisting as the nuts are being removed.

e. Pull the panel back and allow it to rest on the padded control wheel tube.

f. Disconnect the leads of the flasher unit and also the wire connected to the clamp around the body of the unit. Identify leads to facilitate reinstallation.

g. Remove the flasher unit from the airplane.

11-165. INSTALLATION OF STALL WARNING FLASHER.

a. Connect the appropriate wire to the clamp around the body of the flasher unit and secure with appropriate screw.

b. Connect the flasher unit leads to the appropriate aircraft wiring.

c. Check operation of flasher unit. (Refer to Paragraph 11-168.)

d. Ascertain that one end of the ground strap is placed over the shock mount stud.

e. Place the floating panel in position and allow the shock mount attachment studs to protrude through the panel. Install and tighten attachment nuts.

f. Remove the padding and release the control wheel.

g. Place the instrument panel cover in its attachment slot and snap fastener to secure cover.

11-166. REMOVAL OF STALL WARNING HORN. The stall warning horn is mounted on a channel assembly below the instrument panel above the pedestal.

a. Access is gained to the stall warning horn by going underneath the instrument panel.

b. From behind the channel assembly, remove the two nuts securing the wires to the stall warning horn and the stall warning horn to the mounting plate.

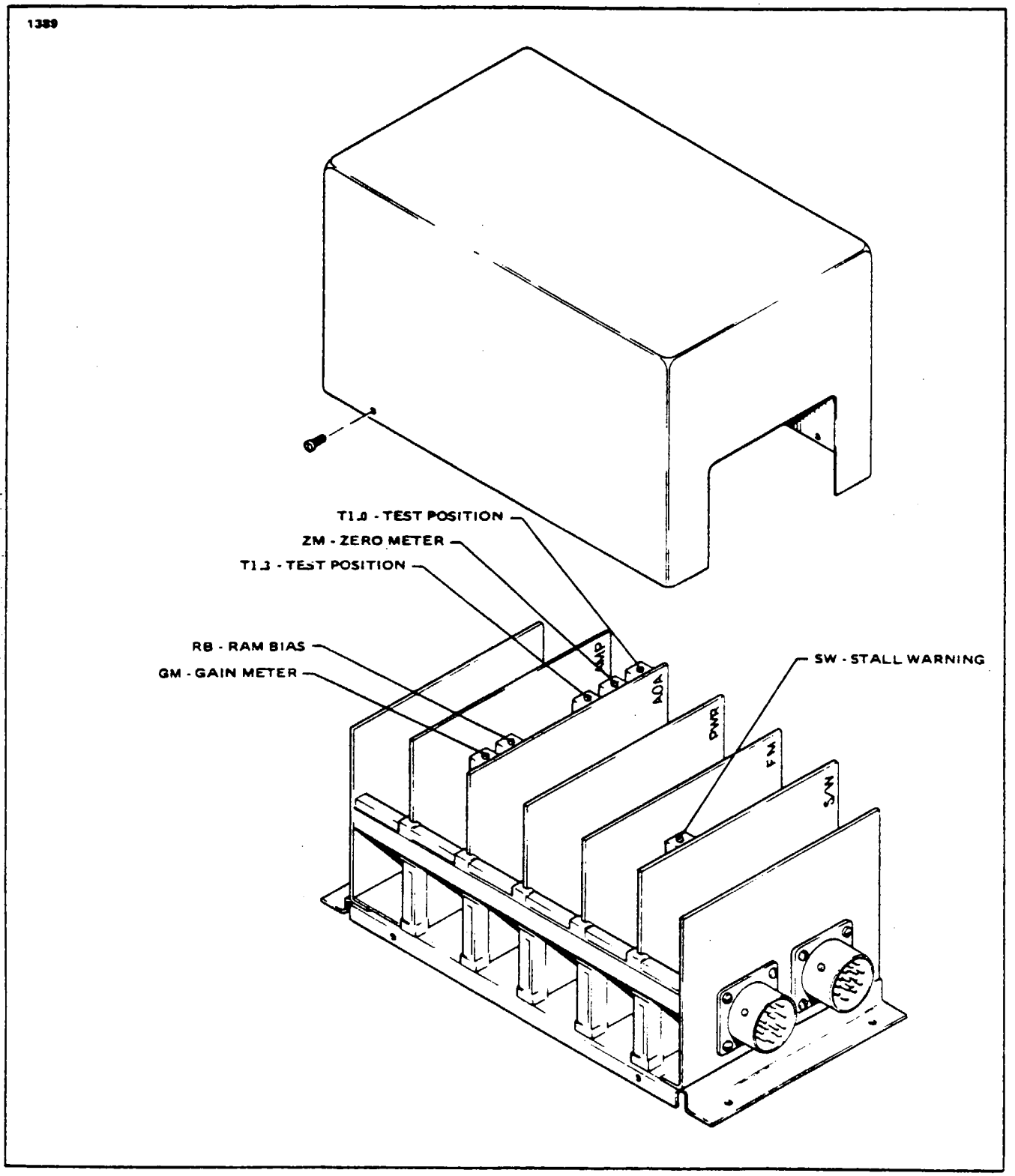

Figure 11-22. SAS Computer

NOTE

Mark the wires and terminals on the horn to facilitate reinstallation.

c. Pull stall warning horn out of channel assembly and remove from the aircraft.

11-167. INSTALLATION OF STALL WARNING HORN.

a. Insert stall warning horn into channel assembly underneath the instrument panel above the pedestal.

b Put the two wires on their correct mounting stud and secure horn and wires with the two nuts previously removed.

c. Check horn for correct installation and operation. (Refer to Paragraph 11-168.)

11-168. PIPER STABILITY AUGMENTATION SYSTEM CALIBRATION PROCEDURE. The following listed calibration procedures of the Piper Stability Augmentation System must be performed in the sequence listed from beginning to end. This will determine if the system has a malfunction and/or needs ground adjustment prior to flight. If the servicemen find a malfunction in the system, it must be corrected prior to proceeding with the remaining tests. If a component is proved faulty and replacement is required, the servicemen, upon replacement of component, must start at the beginning of the calibration procedures. This will facilitate a complete check of the system. These checks do not require the use of any special test equipment, other than the Pointer and Protractor supplied with the aircraft.

NOTE

This adjustment requires two servicemen and must be conducted in full anytime a component of the system has been replaced or repaired.

CAUTION

Prior to applying power to the system, check continuity of system wiring to verify shorts and/or opens do not exist. (Refer to appriate Stability Augmentation System Schematic in Section XV.) This check is very important as shorts and/or opens will destroy certain computer functions.

a. Place the Left Engine Bus Tie Switch, Right Engine Bus Tie Switch and the Non-Essential Bus Tie Switch to the OFF position. Pull all Essential Bus Circuit Breakers to the OUT position.

b. Remove the SAS Computer from beneath the floor of the forward baggage compartment (refer to Paragraph 11-150) and remove cover from computer to gain access to adjustment potentiometers.

c. Connect electrical connectors of aircraft harness to computer.

d. Affix protractor at designated point on fuselage and attach pointer to sensor vane. (Refer to Figure 11-23.) (Pointer and protractor supplied with this aircraft.) Rotate sensor vane counterclockwise to its lower stop; then adjust sensor vane pointer to 4.5 ± .5° position on protractor.

e. Remove the access plate on the left side of the fuselage betwen sta. 274 and sta. 296 by turning the screw type fasteners to release the access plate to gain access to the servo actuator. Remove screws securing guard to actuator case and remove guard.

f. Actuate the following circuit breakers: SAS Monitor, SAS Motor, A/A Computer and Stall Warning.

g. Turn ON Battery Master Switch or connect External Power to aircraft.

NOTE

To remove power from the aircraft electrical system when external power is being used, simply remove the external power plug from the external power receptable of the aircraft.

h. Press the ram warning light and the power warning light located on the left instrument panel. Verify each light illuminates when pressed.

NOTE

If the lights fail to illuminate when pressed, check DC power and circuit breakers. If lights still fail to illuminate replace lamps. (Refer to Paragraph 11-160.)

i. Rotate sensor vane as required to place vane pointer at 44° position on protractor.

j. The Stall Margin Indicator (SMI) pointer should move to the left-hand edge of the red stall area. If necessary, adjust ZM potentiometer (refer to Figure 11-22) as required to position SMI pointer at left-hand edge of red stall area.

NOTE

Clockwise rotation of potentiometers moves SMI pointer clockwise. All potentiometers in computer are 14 turn potentiometers.

k. Rotate sensor vane as required to place vane pointer at 22.5° ± .5 position on protractor.

l. The SMI pointer should move to 1.3 position. If necessary, adjust GM potentiometer (refer to Figure 11-22) as required to position SMI pointer at 1.3 position.

NOTE

If unable to align SMI pointer to correct reading, the following may be defective:

1. Lack of power to indicator (power fault light illuminated); check SAS monitor circuit breaker and/or associated wiring.
2. Sensor vane defective (ram warning light illuminated); replace sensor vane.
3. SAS Computer defective; replace computer.
4. SMI defective; replace indicator.

m. Rotate sensor vane both clockwise and counterclockwise through its full travel. SMI pointer movement should be smooth and continuous.

NOTE

If SMI pointer movement is not smooth and continuous, the following may be defective:

1. Sensor vane defective; replace sensor vane.
2. Stall Margin Indicator defective; replace indicator.
3. SAS Computer defective; replace computer.

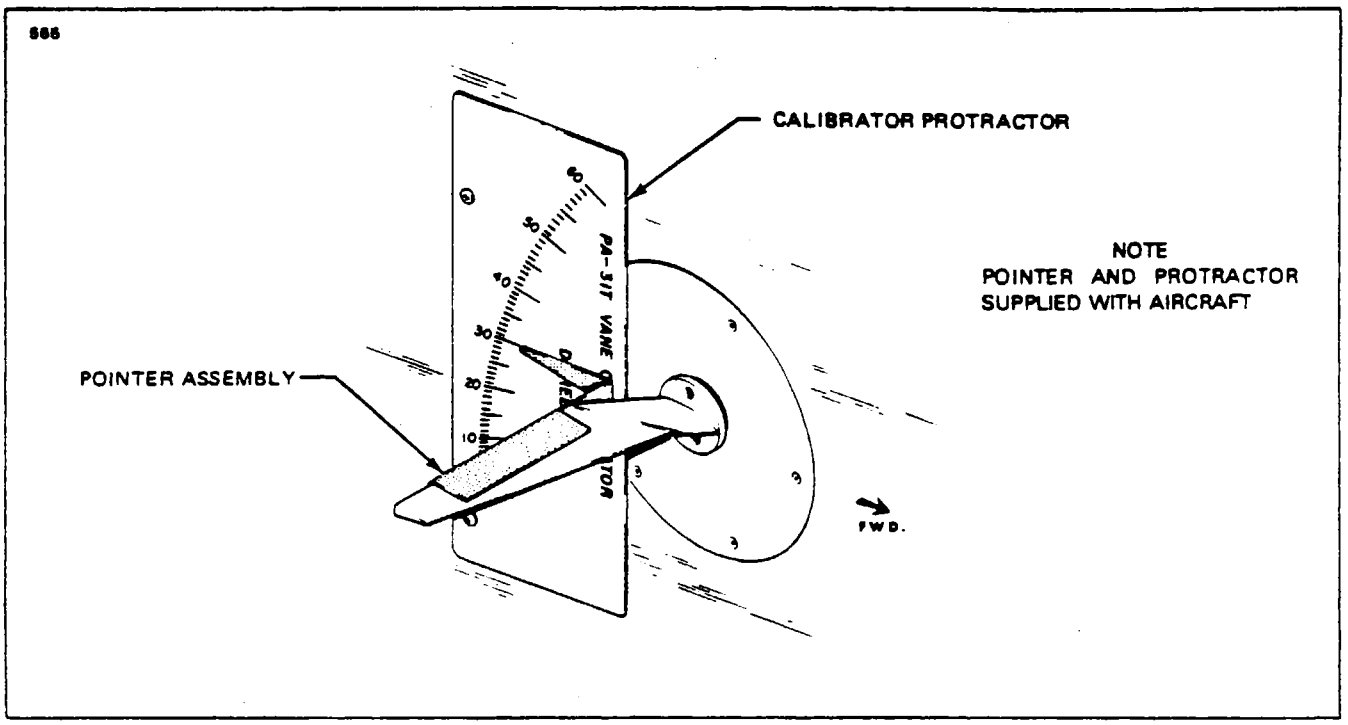

Figure 11-23. SAS Angle of Attack Vane with Check Equipment Installed

n. Depress and secure the Oleo Squat Switch in the right wheel well in the closed position.

o. Rotate the sensor vane as required to place the vane at the 20° position on the protractor.

p. Observe, actuator arm should be at the center of its travel, using rivet on actuator case for alignment reference point. (Refer to Figure 11-21.) If necessary, adjust RB potentiometer (refer to Figure 11-22) as required to align the actuator arm to its center position, using the rivet on the actuator case for alignment reference point.

q. Rotate the sensor vane as required to place the vane pointer at the 10° position on the protractor.

r. Observe, actuator arm should be aligned with lower scribe mark on actuator case: (Refer to Figure 11-21)

s. Slowly rotate the vane clockwise until servo lifts from lower scribe mark. This threshold vane angle should be 17° +0,—2°.

t. Rotate the sensor vane pointer to 25° ± .5° position on the protractor.

u. Observe actuator arm should be aligned with the upper scribe mark on the actuator case.

v. Rotate the sensor vane clockwise to its stop and determine that the actuator arm does not move further than .25 of an inch beyond the observed position noted in Step "u".

w Rotate sensor vane to the 34° + .5°—0° position. This should place the SMI pointer in the yellow 'slow' area, just to the right of the Barber pole area. Stall warning horn should actuate.

1. If stall warning occurs before the vane reaches the 34° + .5°—0° position, adjust SW potentiometer (refer to Figure 11-21) counterclockwise until stall warning horn ceases. Then adjust SW potentiometer clockwise very slowly until stall warning horn actuates.

2. If stall warning actuation has not occured with the vane at the 34° + .5°—0° position, adjust the SW potentiometer very slowly in a clockwise direction until aural stall warning occurs.

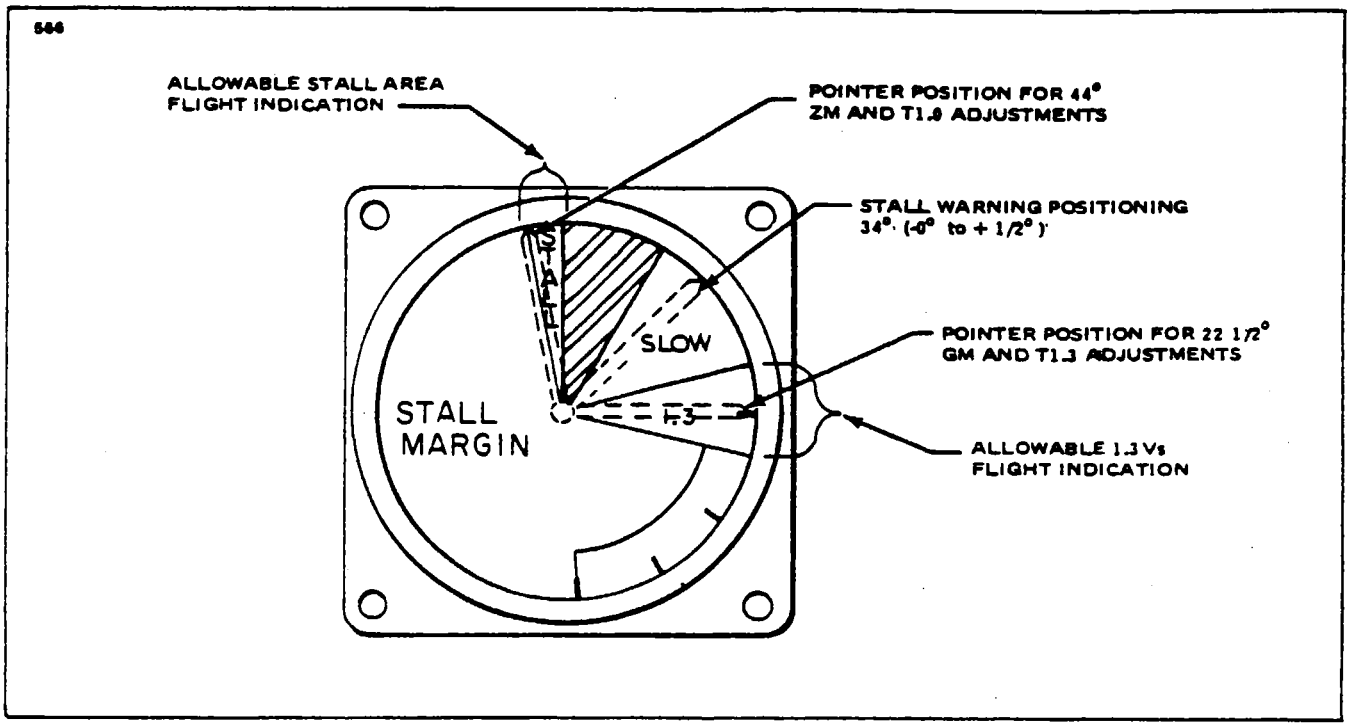

Figure 11-24 SAS Stall Margin Indicator

NOTE

If stall warning actuation does not occur or can not be adjusted to actuate at the correct position, the following may be defective:

1. Lack of power to stall warning circuit (power fault light illuminated); check stall warning circuit breaker and/or associated wiring.
2. Stall warning light and/or horn may be defective; replace stall warning light and/or horn.
3. Computer may be defective; replace computer.

x. Actuate the Stall Warning Heat circuit breaker. Place the Left Pitot Heat Switch (located in the overhead switch panel) in the ON position. Verify vane heat by touching vane (ONE (1) MINUTE MAXIMUM TIME FOR THIS CHECK.) A good vane will be drawing 3 ± .4 from 28 vdc. at the end of this one minute

CAUTION

The vane temperature can get hot to the touch (400° F+). The heater should not be left on for more than one (1) minute to prevent heater runaway and possible damage.

y. Turn Left Pitot Heat Switch OFF and pull the Stall Warning Heat circuit breaker. Release Oleo Squat Switch in right wheel well.

z. Move the panel mounted test switch to the 1.0 test position and hold.

aa. SMI pointer should move to the left-hand edge of the red stall area. If necessary, adjust T1.0 potentiometer (refer to Figure 11-22) as required to position SMI pointer at left-hand edge of red stall area.

ab. Move the panel mounted test switch to the 1.3 test position and hold.

ac. SMI pointer should move to the 1.3 position. If necessary, adjust T1.3 potentiometer (refer to Figure 11-22) as required to position SMI pointer at 1.3 position on indicator. Release test switch.

NOTE

Should Test Switch fail to operate in either and/or both positions, the following may be defective:

1. Lack of power to test switch; check SAS circuit breakers and/or associated wiring.
2. Defective test switch; replace test switch.
3. SAS Computer defective; replace computer.

ad. Systematically pull out and then push in each of the following circuit breakers: A/A Computer, Stall Warning and SAS Motor.

ae. The power warning light should illuminate when each circuit breaker is pulled out and should extinguish when pushed in.

NOTE

If the power warning light fails to illuminate, the computer may be defective.

af. Rotate the sensor vane to either extreme.

ag. Wait 30 seconds; then pull out the SAS Motor circuit breaker.

ah. The power warning light should illuminate.

ai. Rotate the sensor vane to the opposite extreme.

aj. The ram warning light should illuminate within 10 seconds.

ak. Actuate the SAS Motor circuit breaker. Power warning light should extinguish.

al. The ram warning light should extinguish within 40 seconds.

NOTE

If the ram warning light fails to illuminate and/or extinguish, the computer or servo motor may be defective.

am. This completes the Sequential Test and Ground Adjustment Procedure. Procedure is not complete until Flight test has been favorably completed.

an. Reinstall computer (refer to Paragraph 11-151) and check press to test features to verify computer connections are correct.

ao. Remove the sensor vane pointer.

NOTE

This completes the initial ground set-up procedure. The calibration procedure is not complete until flight test has been conducted and post flight test adjustments have been made.

11-169. SAS IN FLIGHT CHECK.

a. Stall the aircraft (gear and flaps extended, power off) using an entry rate of not more than 1 mph/sec.

NOTE

The stall speed should coincide with flight manual speeds, within ± 2 mph, and the stall margin indicator pointer position should be within the solid red stall area when stall occurs.

b. If the pointer is not located as noted in Step "a," record the pointer position by marking the indicator bezel with a pencil mark in line with the pointer centerline.

c. Multiply the indicated stall speed by the factor 1.3 and stabilize the aircraft airspeed at this computed speed with the gear and flaps extended, power off.

d. The stall margin indicator pointer should be within the white 1.3 area.

e. If the pointer is not within the 1.3 white area, record the pointer position by marking the indicator bezel with a pencil mark in line with the pointer centerline.

f. Determine the stall warning indication by slowly decreasing the airspeed until the warning occurs.

NOTE

Aural stall warning should occur at an airspeed within 5 to 10 mph (4 to 9 Kts.) above stall speed obtained in step "a" regardless of the SMI pointer position.

g. If the stall warning does not meet the 5 to 10 mph requirement, record the position of the stall margin indicator pointer on the bezel with a pencil mark.

h. Establish the aircraft in a flap and gear up, full power climb at an airspeed of 122 KIAS.

i. Record the stall margin indicator pointer position by marking a pencil mark on the instrument bezel in line with the pointer centerline.

CAUTION

Do not attempt any adjustments until all vane angles marked during the flight check have been determined and recorded. This must be accomplished in the identical sequence as the ground set-up procedure.

11-170. SAS POST FLIGHT CHECK.

a. Replace the pointer and protractor, then remove the fuselage access plate to the actuator in the rear fuselage and the actuator cover so the actuator arm is visible.

b. Determine vane angles derived during flight test by rotating vane to align needle with marks on indicator. Do not attempt any adjustments until all vane angles marked during the flight check have been determined and recorded.

c. If readjustment is necessary for any previously established vane angle, repeat the entire ground set-up procedure utilizing the newly established angles where appropriate.

d. Place the vane on the angle determined for the climb speed.

e. If the actuator is not aligned with the lower scribe mark within .25 of an inch. adjust RB pot so that the actuator will just start to move when the vane is moved clockwise. If it is necessary to adjust the RB pot, reverify all other angles for proper operation of the servo and indicator presentation after this re-adjustment.

f. Record the vane angles if different from the nominal stated in Paragraph 11-168. for future reference during ground calibration re-check.

g. Place the panel mounted test switch to 1.0 position and adjust T1.0 pot as required to position SMI pointer at right edge of red stall area.

h. Place the panel mounted test switch to 1.3 position and adjust T1.3 pot as required to position on stall margin indicator.

i. Remove all pencil marks from bezel of stall margin indicator.

j. Refly to verify revised set-up.

INTENTIONALLY LEFT BLANK

11-171. SAS CALIBRATION PROCEDURE SUMMARY. (Refer to Figure 11-24.)

1. Place the Left Engine Bus Tie Switch, Right Engine Bus Tie Switch and the Non-Essential Bus Tie Switch to the OFF position. Pull all Essential Bus Circuit Breakers to the out position.
2. Remove the SAS Computer from beneath the floor of the forward baggage compartment and remove cover from computer to gain access to adjustment potentiometers. Connect electrical connectors of aircraft harness to computer.
3. Affix protractor at designated point on fuselage and attach pointer to sensor vane. Protractor and pointer are supplied with aircraft log books. Rotate sensor vane counterclockwise to its lower stop and hold; then adjust sensor vane pointer to 4.5° ± .5° position on protractor.
4. Remove the access plate on the left side of the fuselage between sta. 274 and sta. 296 by turning the screw type fasteners to release the access plate to gain access to the servo actuator. Remove screws securing guard to actuator case and remove guard.
5. Actuate the following circuit breakers: SAS Monitor, SAS Motor, A/A Computer, and Stall Warning.
6. Turn on Battery Master Switch or connect External Power to the aircraft.
7. Apply power and verify press to test features operate.
8. Position the vane pointer at the 44° position on the protractor.
9. Adjust ZM POT to position SMI pointer on the left hand edge of the stall area.
10. Position the vane pointer at 22.5° ± .5° on the protractor.
11. Adjust the GM POT to position the SMI pointer at the 1.3 Vs position on the indicator.
12. Position the vane pointer at the 20° position on the protractor
13. Adjust the RB POT to position the servo actuator arm at the center of its travel.
14. Rotate vane pointer to the 10° position on the protractor.
15. Rotate vane slowly clockwise until servo actuator arm just begins to move from the bottom position. This angle must be 16° ± 1°.
16. If necessary adjust RB POT to accomplish Step 15.
17. Rotate vane pointer to the 25° ± .5° position on the protractor.
18. Observe that the servo actuator arm is at the full up position.
19. Clamp closed the right gear squat switch.
20. Rotate the vane pointer to the 34° + .5° - 0° position on the protractor. This should place the SMI needle close to the right hand edge of the barber pole area on the indicator in the yellow area
21. Adjust the SW POT to give AURAL stall warning at this position.
22. Actuate stall warning heat and left pitot heat circuit breakers. Place the left pitot heat switch to the ON position. Verify vane heat by touching vane. (ONE (1) MINUTE MAXIMUM TIME FOR THIS CHECK.)
23. Turn left pitot heat switch OFF and pull the stall warning heat and left pitot heat circuit breakers. Release Oleo squat switch.
24. Place panel mounted test switch to 1.0 position and adjust T1.0 pot as required to position SMI pointer at left edge of red "STALL" area.
25. Place panel mounted test switch to 1.3 position and adjust T1.3 pot as required to position SMI pointer at 1.3 position on stall margin indicator.
26. This completes the ground set-up of the Stability Augmentation System.
27. Do not attempt any further adjustments until all vane angles marked during flight have been determined and recorded.
28. If readjustment is necessary for any previously established vane angle, repeat the entire ground set-up procedure, utilizing the newly established angles, where appropriate.
29. Rotate the vane to duplicate the SMI needle at the point marked during climb speed test.
30. This vane position should coincide with Step 15.
31. If it is necessary to adjust the RB POT to satisfy this position, reverify all other angles for proper operation of the servo and indicator presentation after this adjustment.

11-172. STABILITY AUGMENTOR EMERGENCY OVERRIDE SYSTEM. The Stability Augmentor Override System is standard in all PA-31T series aircraft. The purpose of this system is to provide the pilot with override capabilities should the Stability Augmentation System malfunction or become inoperative in flight.

This is a manually triggered pneumatic system, utilizing gas pressure from a sealed CO_2 Cartridge for actuating power. The primary components of the system are: a manual release mechanism, a CO_2 Cartridge, a hydraulically damped pneumatic actuator and the necessary plumbing. A cable assembly, attached to the end of the actuator piston rod, increases the tension of the elevator down spring when the Emergency Override System is activated. (Refer to Figure 11-25 for system layout diagram.)

To activate the system, pull the ring, located on the upper right side of the pedestal. This pierces the CO_2 Cartridge and releases gas pressure to the lower port of the pneumatic actuator, driving the piston upward and applying increased tension to the elevator down spring. Hydraulic fluid, on the upper side of the actuator piston is forced through an orifice at the upper port to provide the necessary damping. This fluid passes through a clear plastic tube to a storage reservoir. Approximately 15 seconds are required for complete system travel.

A mechanical lock on the actuator piston rod prevents the actuator from drifting if the gas pressure should leak off. Thus, full down spring tension is maintained until the Stability Augmentation System can be repaired. After repairs have been completed, the Emergency Override System must be rearmed. This is accomplished in accordance with the following instructions:

a. Remove the access panel on the left side of the fuselage between sta. 274 and sta. 296 by turning the screw type fasteners to release the panel.

b. Loosen the pressure release nut on the CO_2 line attached to the bottom actuator port to relieve any trapped pressure and disconnect CO_2 line.

c. Release the mechanical lock on the actuator piston rod and slowly extend the rod. The hydraulic fluid level should be checked as follows: The clear plastic line should be full of fluid with a minimum amount in the reservoir with the rod fully extended. Should the fluid level in the clear plastic line indicate less than previously stated, add hydraulic fluid (MIL-H-5606) as required to fill the plastic line.

d. Connect the end of the CO_2 line to the bottom actuator port and secure.

e. Safety the CO_2 mechanism at the pedestal.

f. Install a new CO_2 Cartridge.

INTENTIONALLY LEFT BLANK

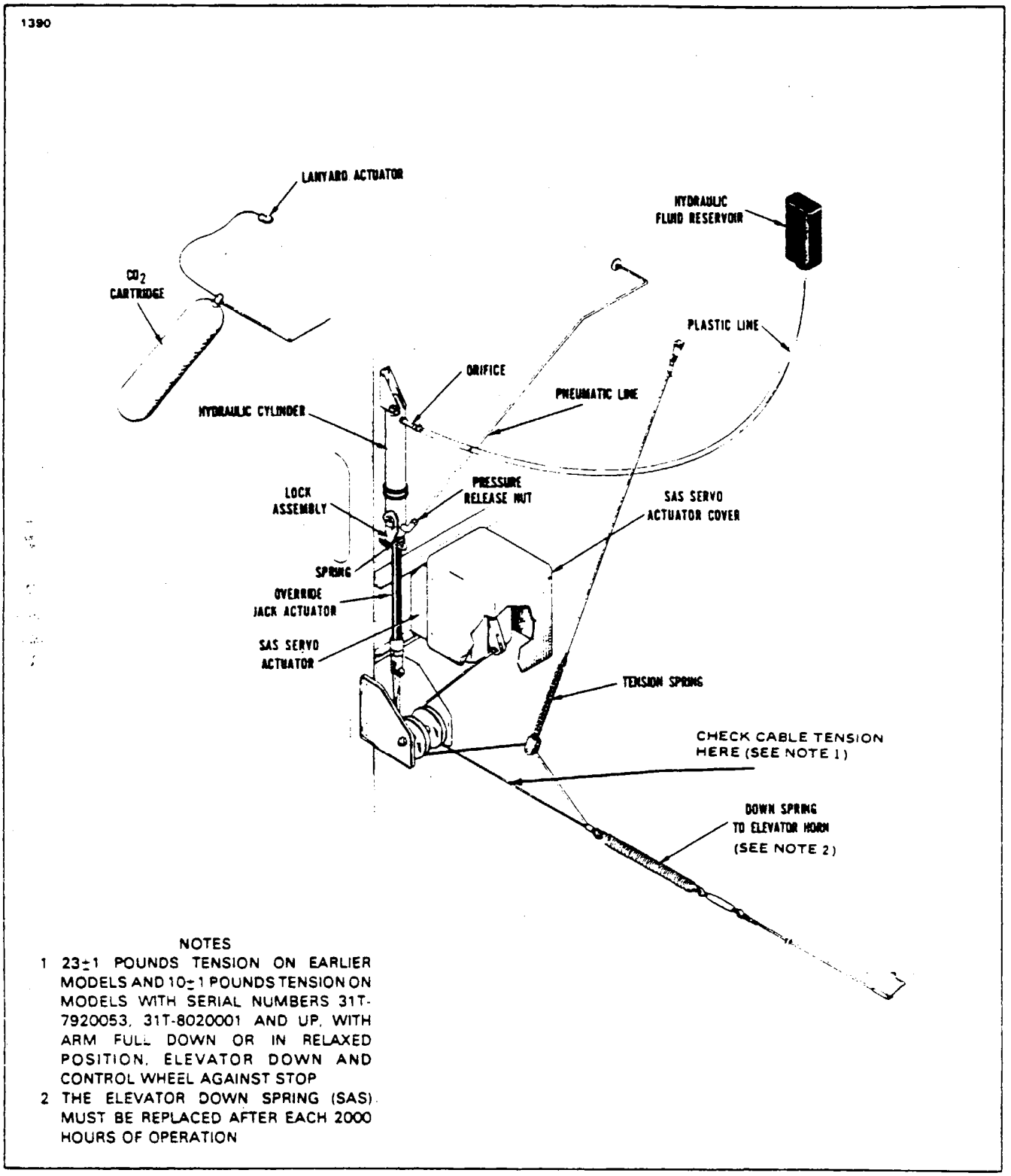

NOTES

1 23±1 POUNDS TENSION ON EARLIER MODELS AND 10±1 POUNDS TENSION ON MODELS WITH SERIAL NUMBERS 31T-7920053, 31T-8020001 AND UP, WITH ARM FULL DOWN OR IN RELAXED POSITION, ELEVATOR DOWN AND CONTROL WHEEL AGAINST STOP

2 THE ELEVATOR DOWN SPRING (SAS) MUST BE REPLACED AFTER EACH 2000 HOURS OF OPERATION

Figure 11-25 SAS Stability Augmentor Emergency Override System

11-173. A.O.A. SENSOR VANE POTENTIOMETER AND HEATER ELEMENT CHECKS. (Refer to Chart 11-1 and Figure 11-25a.) The following checks will require a digital or vacuum tube D.C. voltmeter (DVM or VTVM), an ohmmeter and an amp meter.

a Potentiometer test, using a D.C. digital voltmeter (DVM or VTVM):

NOTE

DO NOT measure potentiometer wiper contact resistance with an ohmmeter, as this tends to destroy the wiper contacts. To determine wiper potentiometer quality, measure wiper D.C. voltage, with a DVM or VTVM.

1 Open the nose baggage compartment and remove the plastic cover that protects the A.O A. sensor (SAS vane) housing, from the nose baggage compartment panel.

NOTE

If Rosemount model 861CD1 A.O.A. sensor is installed, and the SAS system is not operating properly, refer to the latest revision of Piper Service Letter No. 835 for information concerning the replacement of the A.O.A. sensor with model 861CD2 mod B. If Rosemount model 861CD2 A.O.A. sensor is installed, consider having the above modification installed per Piper Service Letter No. 835 These units are not field repairable, return to the Rosemount factory or contact your Cheyenne Service Center; some Service Centers have set up exchange programs.

2 Pull back the remaining trim panel enough to pull out connectors E439 and E441, connected to the A O.A sensor wires.

3. With the SAS switch "ON" and while using a DVM or VTVM, ground check the potentiometers by measuring their voltages.

4 At the orange and white orange wires, measure the output voltage from the computers two +20 VDC regulators. These two wires should measure close to +20 VDC above airframe ground, and they must not differ by more than .3 VDC, or the model 20L(1) computer is bad.

5. While slowly moving the vane up and down, measure wiper voltage to airframe, on the red, and then on the white red wires The voltage reading must change smoothly between +2 volts (vane up) to about +19 volts (vane down) above airframe ground, or the A.O.A. sensor is bad.

6. Measure the voltage between the red and the white/red wires, while moving the vane slowly up and down On these two wipers the voltage should change in unison, so any measured voltage from wiper to wiper is potentiometer tracking error. The computer has a comparison circuit that constantly monitors the voltage difference between these two wires; it turns on the SAS fail light when this difference gets larger than 1 5 VDC

b Case heater test: (No case heat causes intermittent "SAS FAIL.")

1. Check the case heater by leaving the SAS system turned on for five or more minutes, and then placing your hand up against the metal case, where you can see the model number.

2 The case heater can also be checked by measuring from pin 3 of connector E441 (black wire) to pin 5 of connector E439 (white wire with black stripe) for 44 ohms of resistance.

c. Vane deice heater test:

1 Check the heater by switching on the left pitot heat, having one person holding onto the vane, while another person presses (and holds in) the right main gear safety switch. Let go of vane at the first signs of heating

2. The heater can also be bench tested with a 28 volt power supply. Connect the power supply to connector E441, pin 3 (black wire), and pin 4 (grey wire) for one minute. The current (A.C. or D.C.) should drop to three amperes (+ 4a), at the end of one minute, and there should be signs of heating. (A switch on surge of 10 amperes is alright.)

11-174. REPLACEMENT OF ELEVATOR (SAS) DOWN SPRING. (Refer to Figure 11-25.) The elevator (SAS) down spring must be replaced after every 2,000 hours of aircraft operation.

a. Gain access to the elevator (SAS) down spring by removing the access panel on the left side of the tail section at fuselage station 296.0.

b. Ascertain that the SAS servo actuator arm is full down or in the relaxed position; the elevator is down and the control wheel is against its stop.

c. Disconnect the turnbuckle which connects the SAS down spring to the cable assembly going to the elevator horn

d Remove the old SAS down spring and replace with a new one (P/N 51484-00) and reconnect the turnbuckle.

e With the SAS servo arm in the full down position, the elevator down and the control wheel against its stop, tighten the turnbuckle until the tension specified in Note 1 of Figure 11-25 is obtained when checking cable tension at the location shown in Figure 11-25. Safety the turnbuckle and install the access panel

f Make the appropriate logbook and inspection manual entries.

THIS SPACE INTENTIONALLY LEFT BLANK

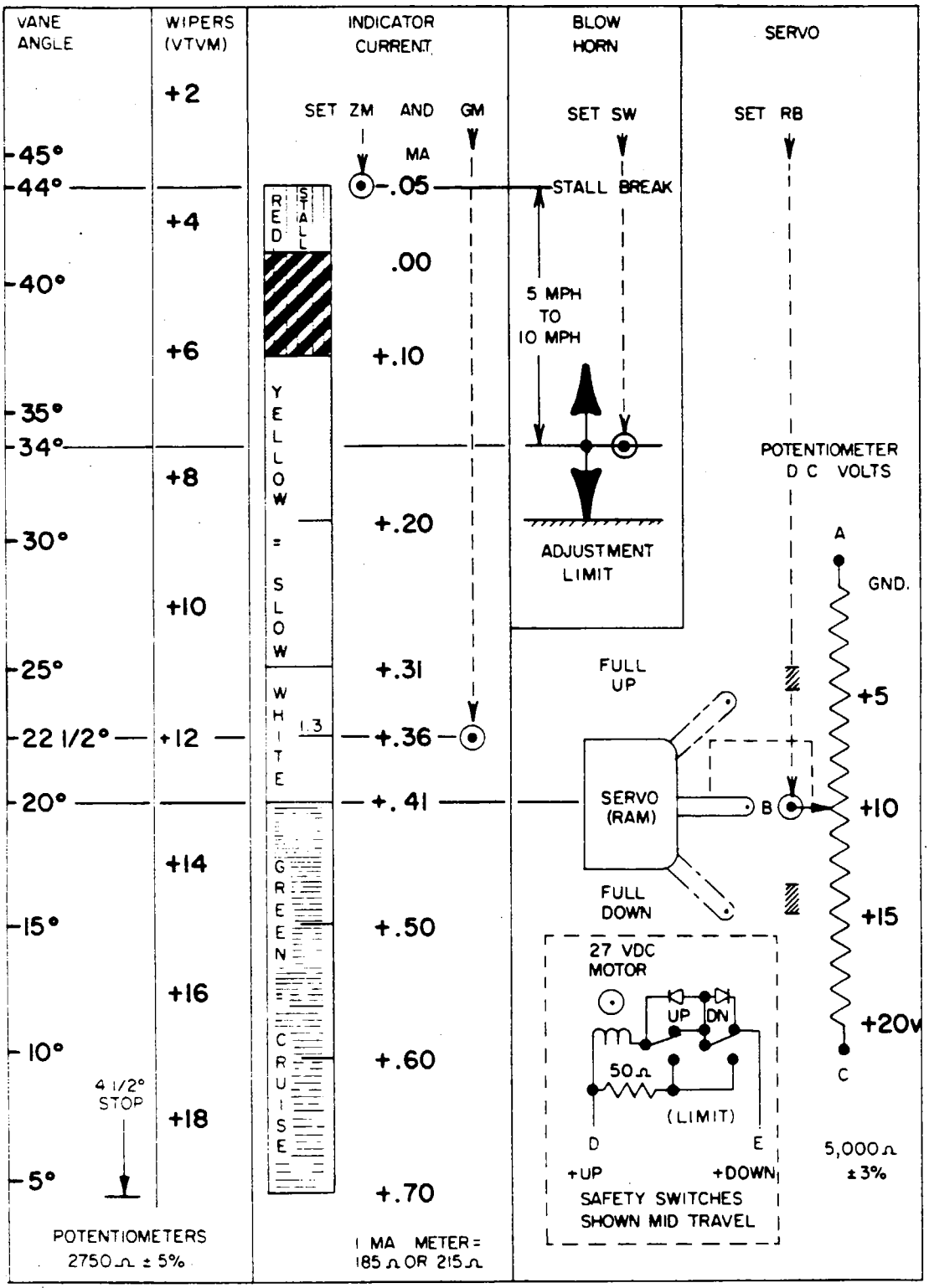

CHART 11-1. S.A.S. ANGLE RELATIONSHIPS

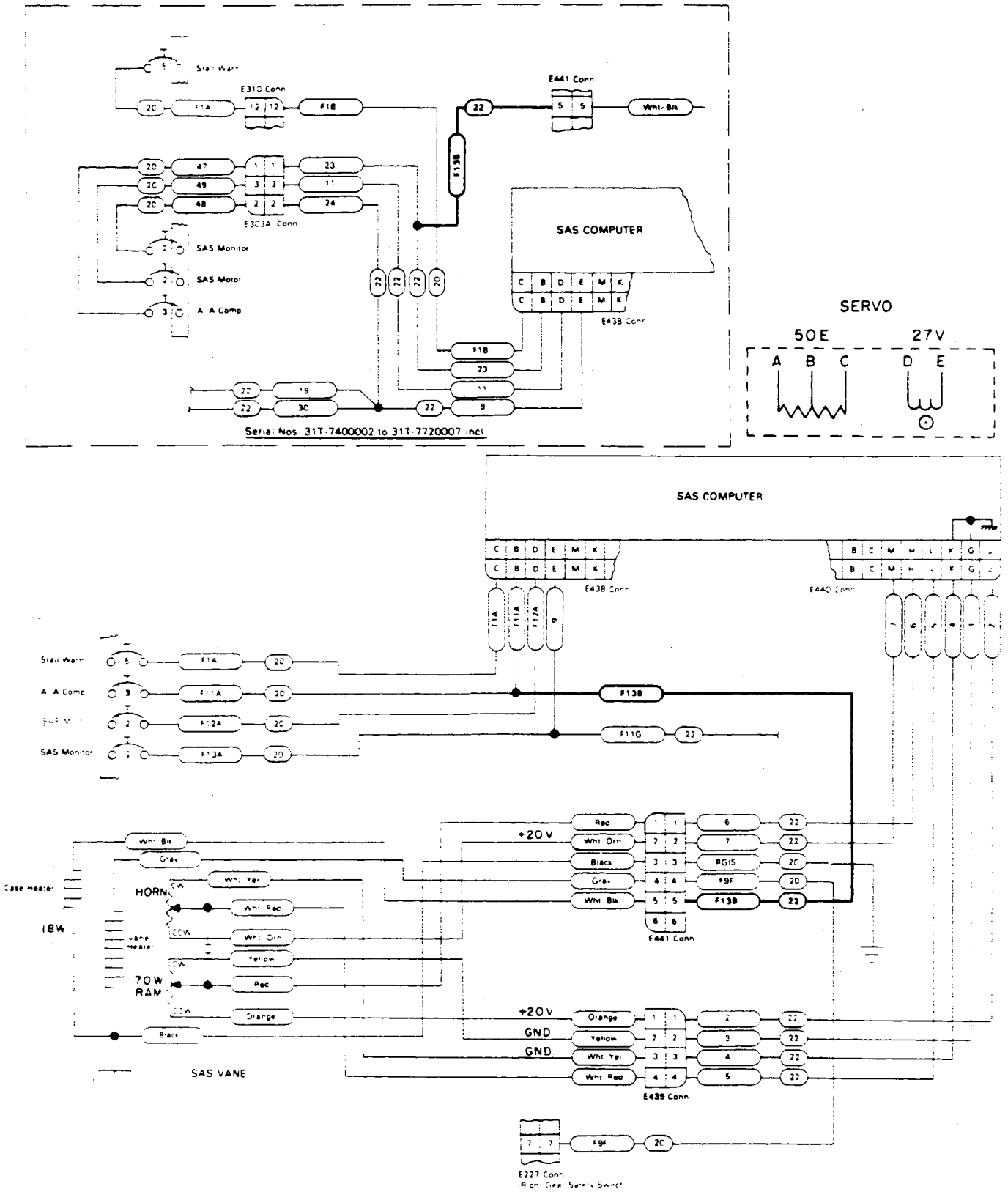

Figure 11-25a. A.O.A. Sensor Schematic

TABLE XI-V. TROUBLESHOOTING CHART (ELECTRICAL SYSTEM)

Trouble	Cause	Remedy
	STARTER-GENERATOR	
Unit fails to operate or does not attain normal speed.	Low voltage power source.	Check the power source to make certain that full voltage is being applied to starter terminals.
	Defective switch in power supply line.	Replace switch.
	Defective starter solenoid.	Replace solenoid.
	Damaged armature.	Replace the armature assembly.
	Short circuited or open stator windings.	Replace the stator assembly.
	Improperly seated brushes.	Check brush seats and increase brush run-in time.
	Eccentric commutator.	Refinish commutator. (Refer to Paragraph 11-13, a.)
Excessive sparking at brushes.	Short circuited or grounded field windings.	Replace stator assembly.
	Excessive clearance in bearings or rough bearing races.	Replace bearings.
	Eccentric commutator.	Refinish commutator. (Refer to Paragraph 11-13, a.)
	Short circuit in armature windings.	Replace armature assembly.
	Brushes incorrectly installed with top bevel reversed.	Reverse and reseat brushes.

TABLE XI-V. TROUBLESHOOTING CHART (ELECTRICAL SYSTEM) (cont.)

Trouble	Cause	Remedy
Excessive sparking at brushes. (cont.)	Insufficient brush run-in proper seating.	Run in brushes until seated. (Refer to Paragraph 11-13.f.)
	Severe overload or short circuit in aircraft electrical system.	Locate and correct fault.
	Brushes sticking in holders.	Free-up brushes.
	Weak brush springs.	Replace brush holders.
	Brushes loose in holder.	Replace brushes. If still loose, replace brush holder assemblies.
Noisy operation.	Rough bearings.	Replace bearings.
	Scored or worn drive splines.	Replace drive shaft.
	Fan blades bent and rubbing.	Straighten or replace fan.
Unit vibrates.	Unbalanced armature assembly.	Balance or replace armature assembly.
	Excessive run-out of armature bearings.	Replace armature bearings.
Generator produces full voltage - but with reversed polarity.	Voltmeter leads reversed.	Connect voltmeter correctly.
	Residual magnetism in field poles creates wrong polarity.	Flash the field in accordance with Paragraph 11-13.g
Generator overheats.	Continuous overload.	Check aircraft electrical system for grounds, etc. Make correction as necessary.

TABLE XI-V. TROUBLESHOOTING CHART (ELECTRICAL SYSTEM) (cont.)

Trouble	Cause	Remedy
BATTERY-DISCONNECT SOLENOID		
Does not operate.	Open circuit.	Repair wiring.
	Dirty contacts on connector plug.	Clean contacts.
	Open-circuited solenoid coil.	Replace unit.
	Plunger binding.	Remove and wash plunger and housing thoroughly with carbon tetrachloride. Change spring compression only as a last resort.
Intermittent operation.	Short-circuited coil. Loose electrical connection.	Replace coil. Clean and tighten electrical connections.
	Plunger binding.	See remedy pertaining to "Plunger binding" under "Does not operate."
	Badly burned points.	If points cannot be dressed down, replace the unit.
STROBE LIGHT		
Flash tubes do not fire.	Flash tube exposed to very high temperature.	Replace flash tube.
	Leak around seal of the wire to the glass.	Replace flash tube.
Flash tubes continuously glow a light blue.	Flash tubes are self-ionized.	Replace flash tube.

TABLE XI-V. TROUBLESHOOTING CHART (ELECTRICAL SYSTEM) (cont.)

Trouble	Cause	Remedy
	DOOR SEAL CIRCUIT	
Cabin door unsafe light will not go out.	Latching relay sticking in the open position.	Lubricate the mechanical parts (sparingly) with "Glide Air" or equivalent.
	Switch or switches in door frame out of adjustment.	Adjust per Paragraph 11-107.
	Defective pressure switch.	Replace switch.
	Short to ground.	Check wiring and repair.
Cabin door unsafe light will not come on.	Circuit breaker open.	Reset circuit breaker.
	Broken wire or loose connection.	Check and repair wiring.

TABLE XI-VI. CIRCUIT LOAD CHART

CIRCUIT	CIRCUIT BREAKER VALUE	ITEM	DUTY CYCLE	NO. OF UNITS OPERATING SIMULTANEOUSLY	CURRENT DRAIN PER UNIT IN AMPERES AT 28.5V
AIR INTAKE DEICE (L OR R)	15	HEAT ELEMENT (PARTING STRIP)	INT.	2	14.3
ANNUNCIATOR PANEL	3	INDICATOR CIRCUITS	INT.	1	.80
ANTI-COLLISION LIGHTS	10	3 STROBE LIGHTS, 3 STROBE POWER SUPPLIES	CONT.	3	1.85
CABIN COMFORT	10	COMPRESSOR CLUTCH	INT.	1	1.80
		CONTROL BOX	INT.	1	.50
		HEATER ASSEMBLY	INT.	1	3.60
		HEATER FUEL FILTER	INT.	1	1.80
		HEATER FUEL PUMP	INT.	1	1.80
		RECIRCULATING FAN RELAY	INT.	1	.10
CABIN MAP AND DOOR UNSAFE LIGHTS	5	CABIN READING LIGHTS	INT.	3	.51
		DESK LIGHTS	INT.	2	.40
		DOME LIGHTS	INT.	1	.79
		DOOR UNSAFE WARNING LIGHT	INT.	2	.04
		MAP LIGHTS	INT.	1	.13
		NO SMOKING/FASTEN SEAT BELTS	INT.	3	.04
CABIN PRESSURE CONTROL	5	CABIN DOOR SEAL SOLENOID	CONT.	1	.90
		CABIN DUMP VALVE SOLENOID	CONT.	1	.90
		VACUUM RELIEF SOLENOID	CONT.	1	.90
CABIN PRESSURE INDICATOR	5	WARNING LIGHT	INT.	1	.04
CONDENSER BLOWER	15	FAN MOTOR & RELAY	INT.	1	11.6
DIRECTIONAL GYRO (L OR R)	2	INSTRUMENT	CONT.	1	.50
FUEL FLOW & OIL TEMP. (L OR R)	3	INSTRUMENT SENDERS	CONT.	1	1.04
FUEL PUMP 1 (L OR R)	5	PUMP MOTOR	CONT.	1	4.0
FUEL PUMP 2 (L OR R)	5	PUMP MOTOR		1	4.0

TABLE XI-VI CIRCUIT LOAD CHART (cont.)

CIRCUIT	CIRCUIT BREAKER VALUE	ITEM	DUTY CYCLE	NO. OF UNITS OPERATING SIMULTANEOUSLY	CURRENT DRAIN PER UNIT IN AMPERES AT 28.5V
FUEL QUANTITY	3	INDICATOR & SENDERS	CONT.	1	1.0
FUEL SENSING (L OR R)	5	HEATING ELEMENT	CONT.	1	4.92
GEAR DOWN INDICATION	5	INDICATOR LIGHTS	INT	3	04
GEAR WARNING & SOLENOID	5	GROUND WARNING RELAY	INT.	1	.30
		LANDING LIGHT GROUND SOLENOID	INT.	1	.50
		MOTION LIGHT	INT.	1	.04
		SELECTOR LOCK SOLENOID	CONT.	1	1.14
		WARNING HORN	INT.	1	.30
GYRO HORIZON (L OR R)	2	INSTRUMENT	CONT.	1	.50
HOURMETER & O.A.T.	5	INSTRUMENT & SENDER	CONT.	1	.03
HYDRAULIC GOVERNOR TEST (L OR R)	5	SOLENOID VALVE	INT.	1	.90
ICE PROTECTION & CONTROL (L OR R)	5	DEFLECTOR MOTOR	INT.	1	4.1
		INDICATOR LIGHT	INT.	1	.04
		MOTOR CONTROL RELAY	INT.	1	.50
		POWER RELAY	INT.	1	.50
IGNITION SYSTEM (L OR R)	5	IGNITION UNIT	INT.	1	3.5
		INDICATOR LIGHT	INT.	1	02
LANDING & TAXI LIGHT	20	CONTROL SOLENOIDS	INT.	3	.50
		LANDING LIGHT (250 WATT)	INT.	1	8.9
		TAXI LIGHT (250 WATT)	INT.	1	8.9
		WING INSPECTION LIGHT (50 WATT)	INT.	1	1.80
LOW PITCH & BETA SYSTEM (L OR R)	3	BETA RANGE INDICATOR LIGHT	INT	1	.04
		LOCK PITCH SOLENOID	INT.	1	1.1
		PROXIMITY SWITCH AMPLIFIER	CONT.	1	.01
OIL COOLER (L OR R)	5	INDICATOR LIGHT	CONT.	1	.04
		MOTOR	INT	1	4.1

TABLE XI-VI. CIRCUIT LOAD CHART (cont.)

CIRCUIT	CIRCUIT BREAKER VALUE	ITEM	DUTY CYCLE	NO. OF UNITS OPERATING SIMULTANEOUSLY	CURRENT DRAIN PER UNIT IN AMPERES AT 28.5V
PANEL LIGHTING	5	ELECTROLUMINESCENT PLACARDS	CONT.	13	.09
		POST LIGHTS (STANDARD)	CONT.	40	.04
		POST LIGHTS (OPTIONAL)	CONT.	13	.04
PITOT HEAT (L OR R)	10	HEATING ELEMENT	CONT.	1	7.1
POSITION LIGHTS	5	TAILLIGHTS	CONT.	1	1.04
		WING LIGHTS	CONT.	2	.90
PROP & AIR INLET DEICE (L OR R)	20	HEAT ELEMENT (INTAKE AIR) SHEDDING AREA 1	INT.	1	14.2
		HEAT ELEMENT (INTAKE AIR) SHEDDING AREA 2	INT.	1	12.6
		HEAT ELEMENT (PROP)	INT.	1	16.0
		TIMER	CONT.	1	.01
PROP SYNCHRONIZER	5	CONTROL AMPLIFIER	CONT.	1	1.0
		MOTOR	CONT.	1	1.0
RECIRCULATION FAN	15	FAN MOTOR	INT.	1	11.6
STALL WARNING	5	WARNING LIGHT & HORN	INT.	1	.16
STARTER CONTROL (L OR R)	5	FIELD RELAY	INT.	1	.40
		FUEL SOLENOID	INT.	1	.50
		POWER SOLENOID	INT.	1	1.0
SURFACE DEICE	5	ENGAGE SOLENOID	INT.	1	1.3
		INDICATOR LIGHT	INT.	1	.04
		TIMER & RELAY	INT.	1	.24
TURN & BANK (L OR R)	2	INSTRUMENT	CONT.	1	.82
VOLTAGE REGULATOR (L OR R)	10	REGULATOR & FIELD CIRCUIT	CONT.	1	10.0
WINDSHIELD HEAT (L OR R)	25	HEATING ELEMENT	INT.	1	23.0
		SOLENOID	INT.	2	.50
		TIMER	INT.	1	.01
WINDSHIELD WIPER	10	MOTOR	INT.	1	4.6
WING FLAP MOTOR	25	MOTOR	INT.	1	12.0
WING FLAP MOTOR	5	BRAKE RELAY	INT.	1	.10
CONTROL		INDICATOR CIRCUIT	INT.	1	.09
		SOLENOID	INT.	1	.50

TABLE XI-VII. LAMP REPLACEMENT GUIDE

Location	Piper Part No.	Lamp No.
Wing Tips	753 478	A-1285-G/-R
Taillight	753 477	A458
Wing Inspection Light	472 049	4593
Landing Light	472 769	4596 (250W)
Reading Light	758 152	MS35478-305
Fuel Selector Panel	472 028	327
Ammeter Lights	453 792	1828
Alternator Warning	472 815	10-251-R-FB38
Voltmeter	453 792	1828
Instrument Bolt Lights	472 028	327
Compass Light	472 028	327
No Smoking - Fasten Seat Belt	472 789	10-0246-7
Forward Baggage	472 057	313
Gear Down Warning	472 028	327
Gear Unlocked, Red	472 028	327
Stall Warning	472 028	327
Dome Light	758 151	MS15584-15
Refreshment Table	472 057	313
Strobe Lights - Wing Tips	761 157	A427
Strobe Light - Tail	757 635	A456
Map Lights	472 052	304
Ice Detection Light		PS10008-4593
Annunciator Panel Lights		2312
SAS Warning Lights	472 028	327

587

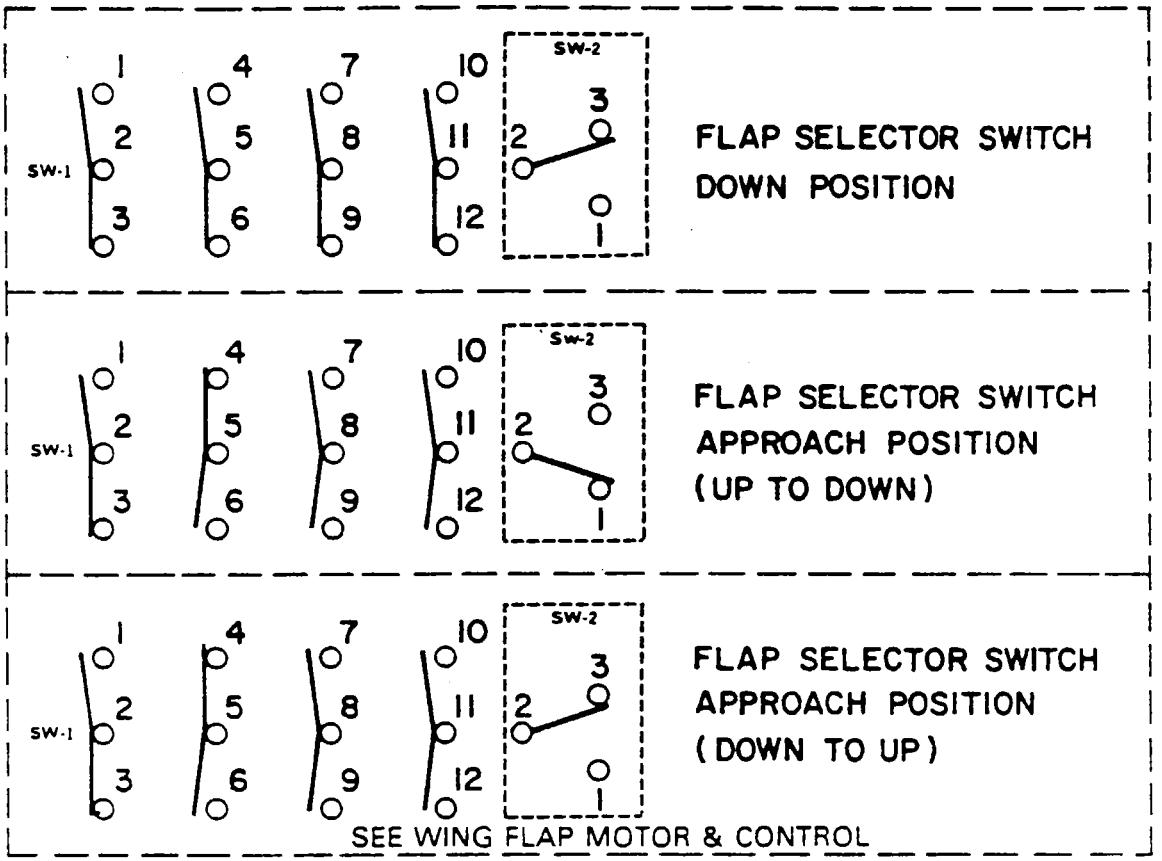

Figure 11-26. Wing Flap Switch

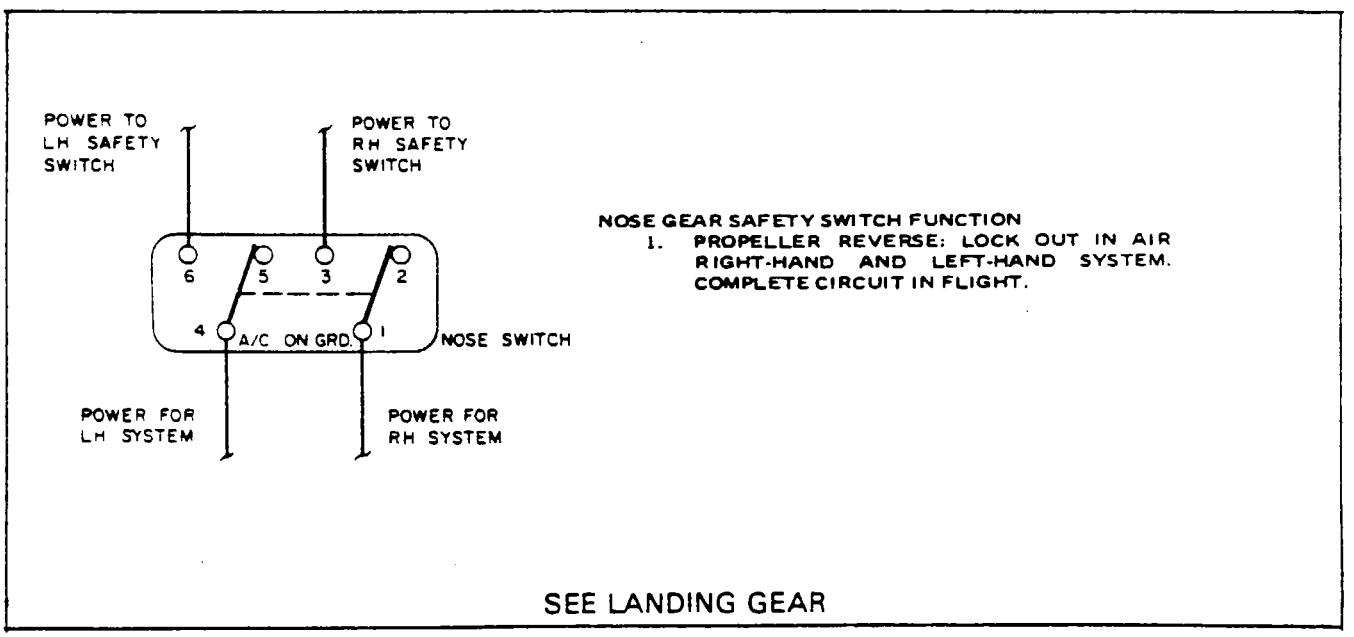

Figure 11-27 Safety Switch Function

1391 B

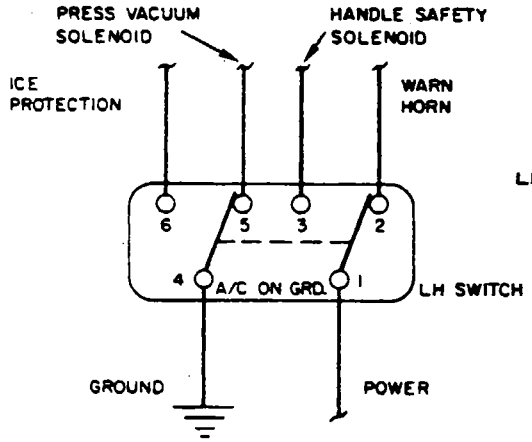

LEFT-HAND SAFETY SWITCH FUNCTION

1. PRESSURIZATION SYSTEM - VACUUM SOLENOID SWITCH PROVIDES ELECTRICAL GROUND WHEN AIRCRAFT IS ON THE GROUND.
2. ICE PROTECTION (PROPELLER AND INLET HEAT) PROVIDES ELECTRICAL GROUND TO COMPLETE SYSTEM WHEN AIRCRAFT IS IN THE AIR.
3. a. PROVIDES PATH FOR ELECTRICITY TO PASS TO GEAR WARNING HORN WHEN AIRCRAFT IS ON THE GROUND.
   b. PROVIDES PATH FOR ELECTRICITY TO PASS TO HANDLE SOLENOID WHEN AIRCRAFT IS IN THE AIR.

1391 C

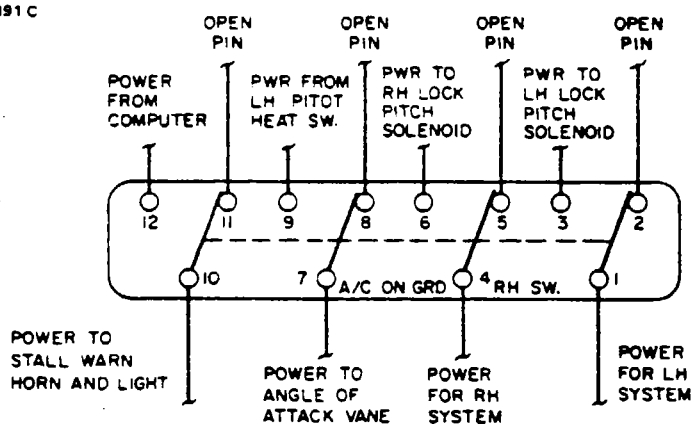

RIGHT-HAND SAFETY SWITCH FUNCTION

1. a. S.A.S. VANE HEAT OPENS ELECTRICAL CIRCUIT TO VANE WHEN AIRCRAFT IS ON THE GROUND.
   b. STALL WARNING ON GROUND IS LOCKED OUT. ELECTRICAL FLOW IS COMPLETED IN FLIGHT.
2. PROPELLER REVERSE LOCK OUT IN FLIGHT (RIGHT-HAND AND LEFT-HAND SYSTEM) COMPLETES CIRCUIT IN FLIGHT.

SEE LANDING GEAR

Figure 11-27 Safety Switch Function (cont.)

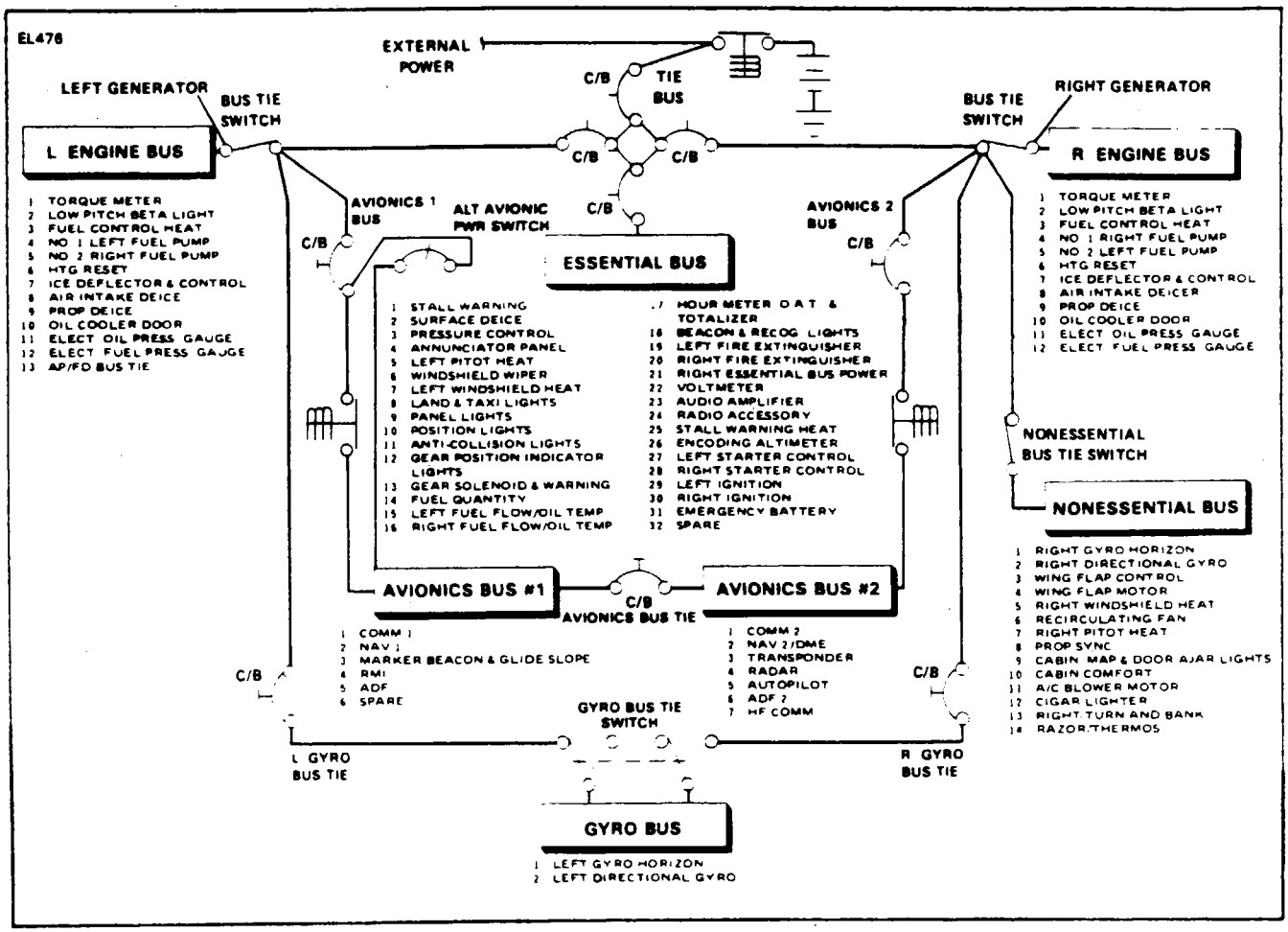

Figure 11-28. Basic Aircraft Electrical Bus Systems (Earlier Models) (Typical)

THIS SPACE INTENTIONALLY LEFT BLANK

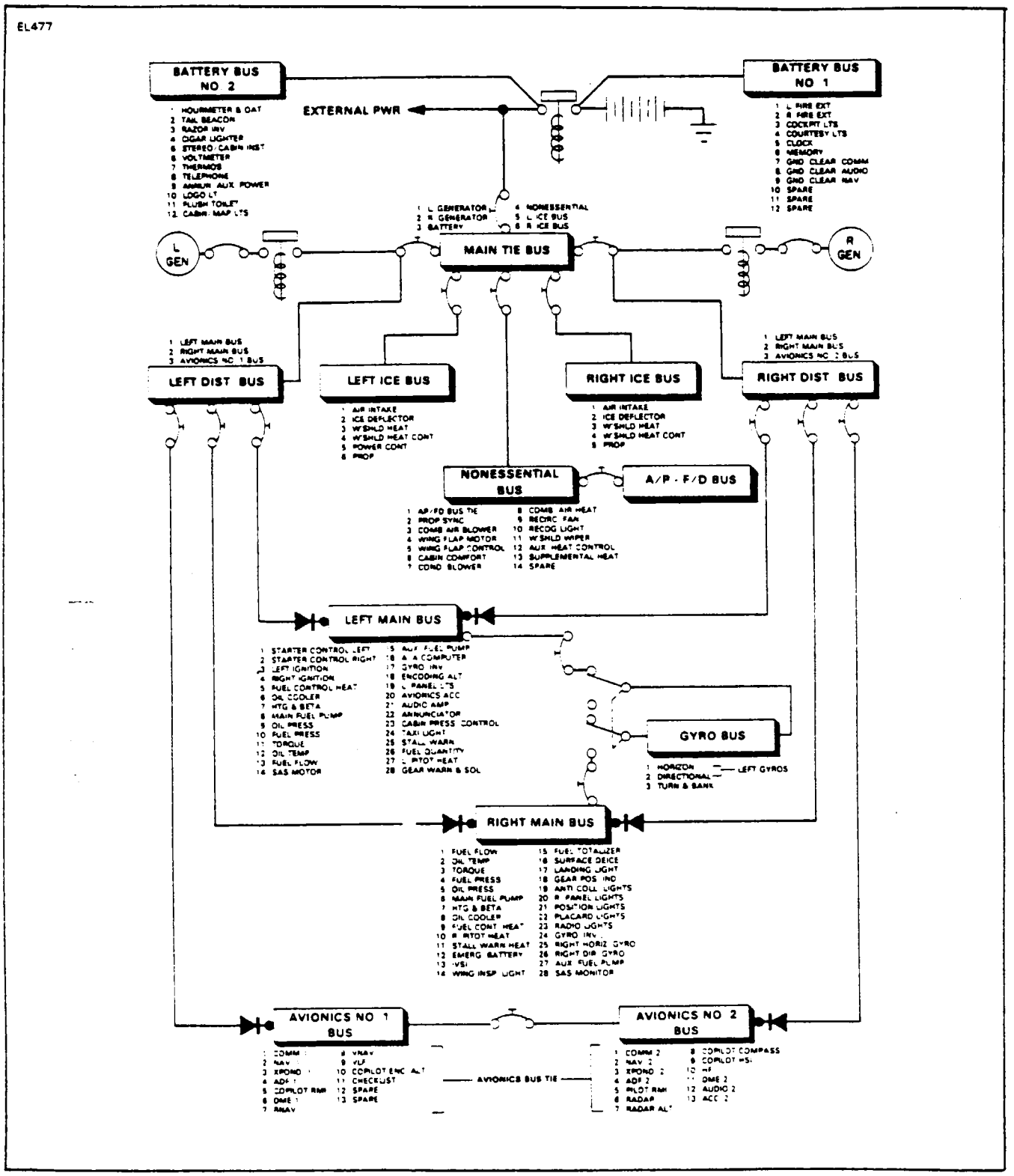

Figure 11-29 Basic Aircraft Electrical Bus Systems.
PA-31T S/N 31T-8120001 and up and PA-31T1 S/N 31T-8104001 and up (Typical)

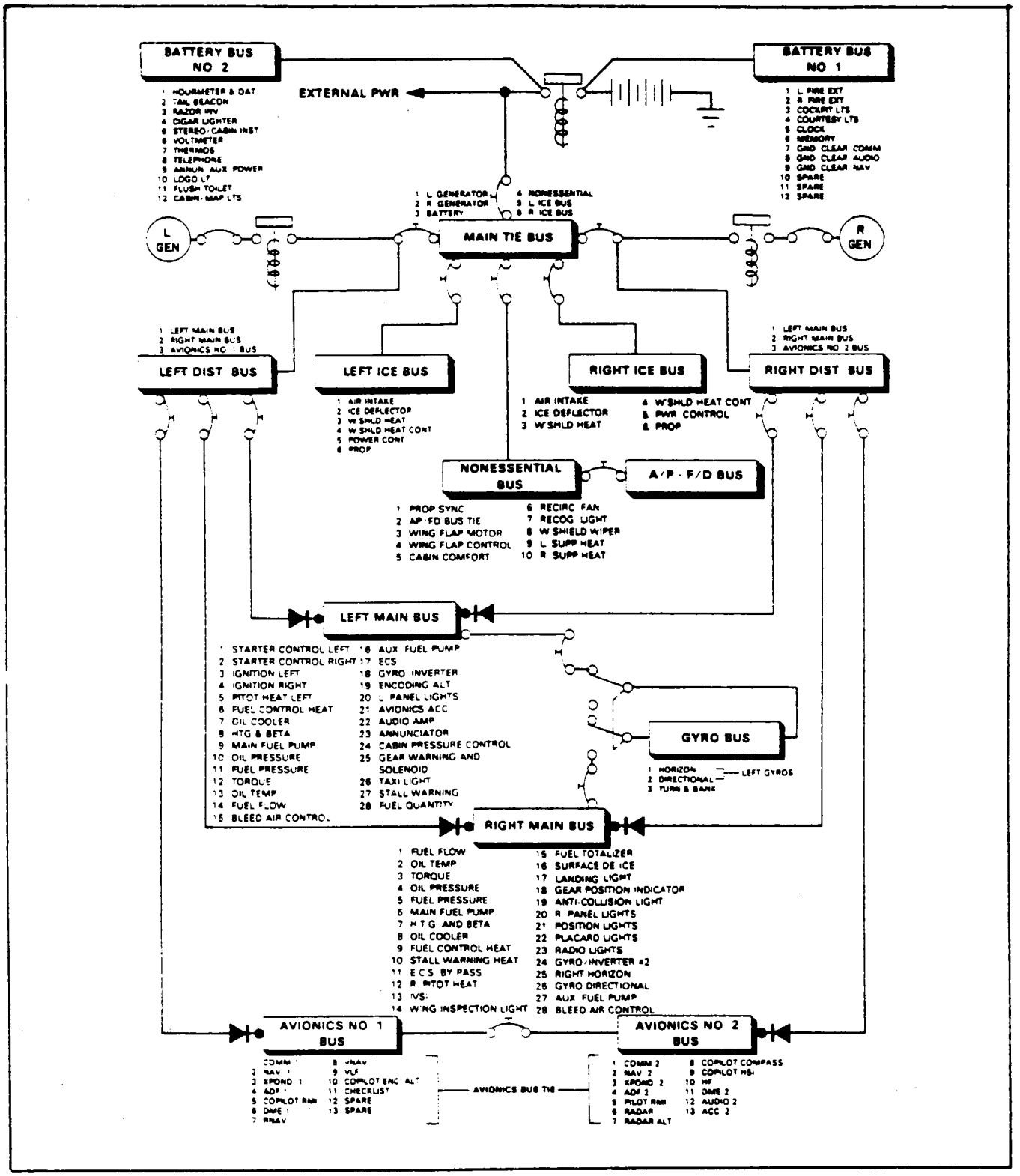

Figure 11-30 Basic Aircraft Electrical Bus Systems.
PA-31T2 S N 31T-8166001 and up (Typical)

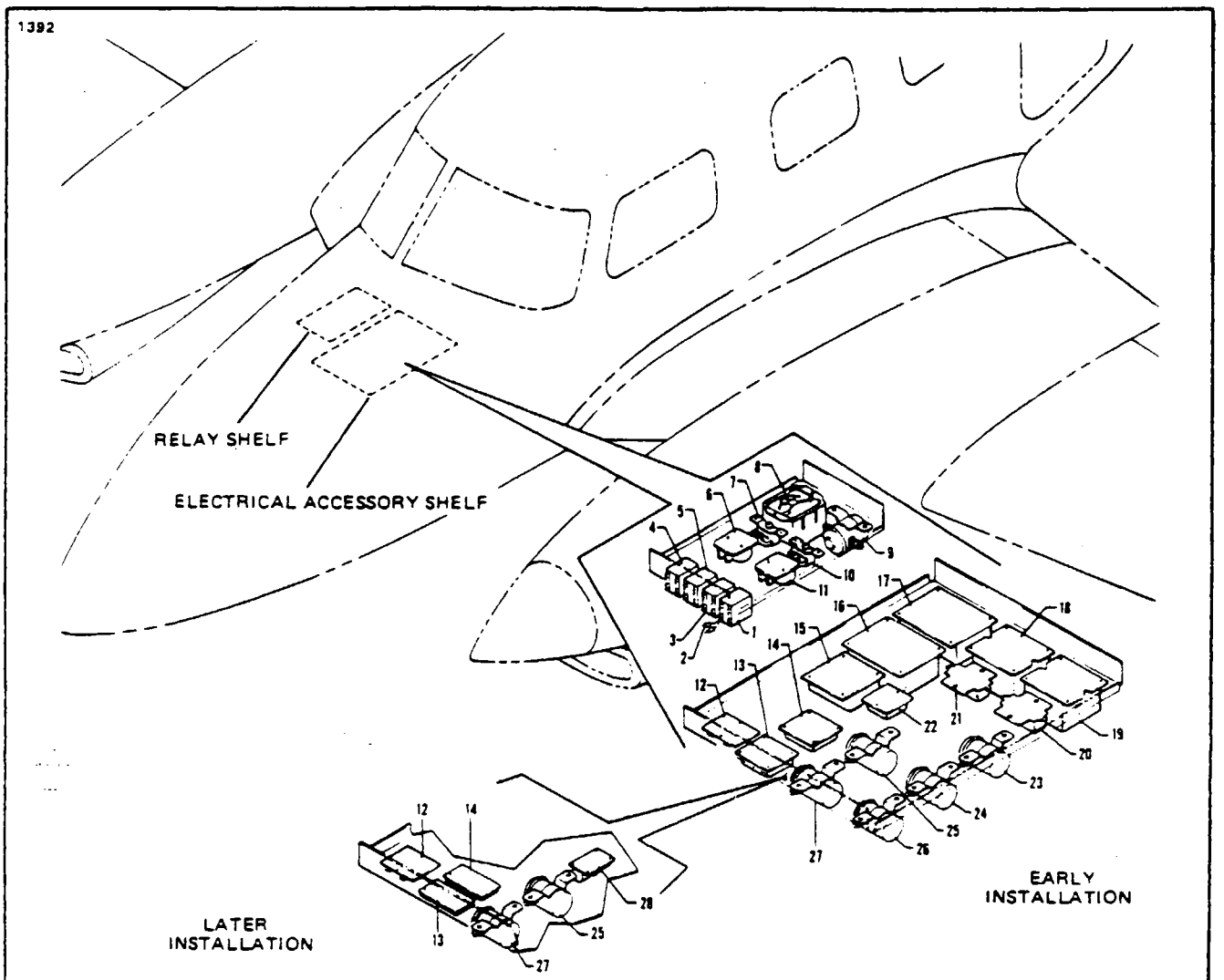

1. PARALLELING RELAY
2. DIODES 10C4
3. RECIRCULATING FAN RELAY
4. RIGHT STARTER FIELD RELAY
5. LEFT STARTER FIELD RELAY
6. RIGHT-HAND DEICING BOOT RELAY
7. RIGHT-HAND ICE VANE MOTOR RELAY AND DIODE IN4006
8. FLAP BRAKE RELAY
9. FLAP SOLENOID
10. LEFT-HAND ICE VANE MOTOR RELAY AND DIODE IN4006
11. LEFT-HAND DEICING BOOT RELAY
12. FLAP MOTOR REVERSING RELAY
13. LEFT WINDSHIELD HEAT TIMER
14. RIGHT WINDSHIELD HEAT TIMER
15. PNEUMATIC-SURFACE DEICER TIMER
16. RIGHT ENGINE DEICER TIMER
17. LEFT ENGINE DEICER TIMER
18. RIGHT VOLTAGE REGULATOR
19. LEFT VOLTAGE REGULATOR
20. LEFT OVERVOLTAGE RELAY
21. RIGHT OVERVOLTAGE RELAY
22. PNEUMATIC-SURFACE DEICER RELAY
23. LANDING LIGHT SOLENOID
24. LANDING LIGHT SOLENOID
25. RIGHT WINDSHIELD HEAT SOLENOID
26. LANDING LIGHT SOLENOID
27. LEFT WINDSHIELD HEAT SOLENOID
28. RADIO PANEL LIGHTS DIMMER UNIT

Figure 11-31. Component Location, Relay Shelf and Electrical Accessory Shelf (Early Models)

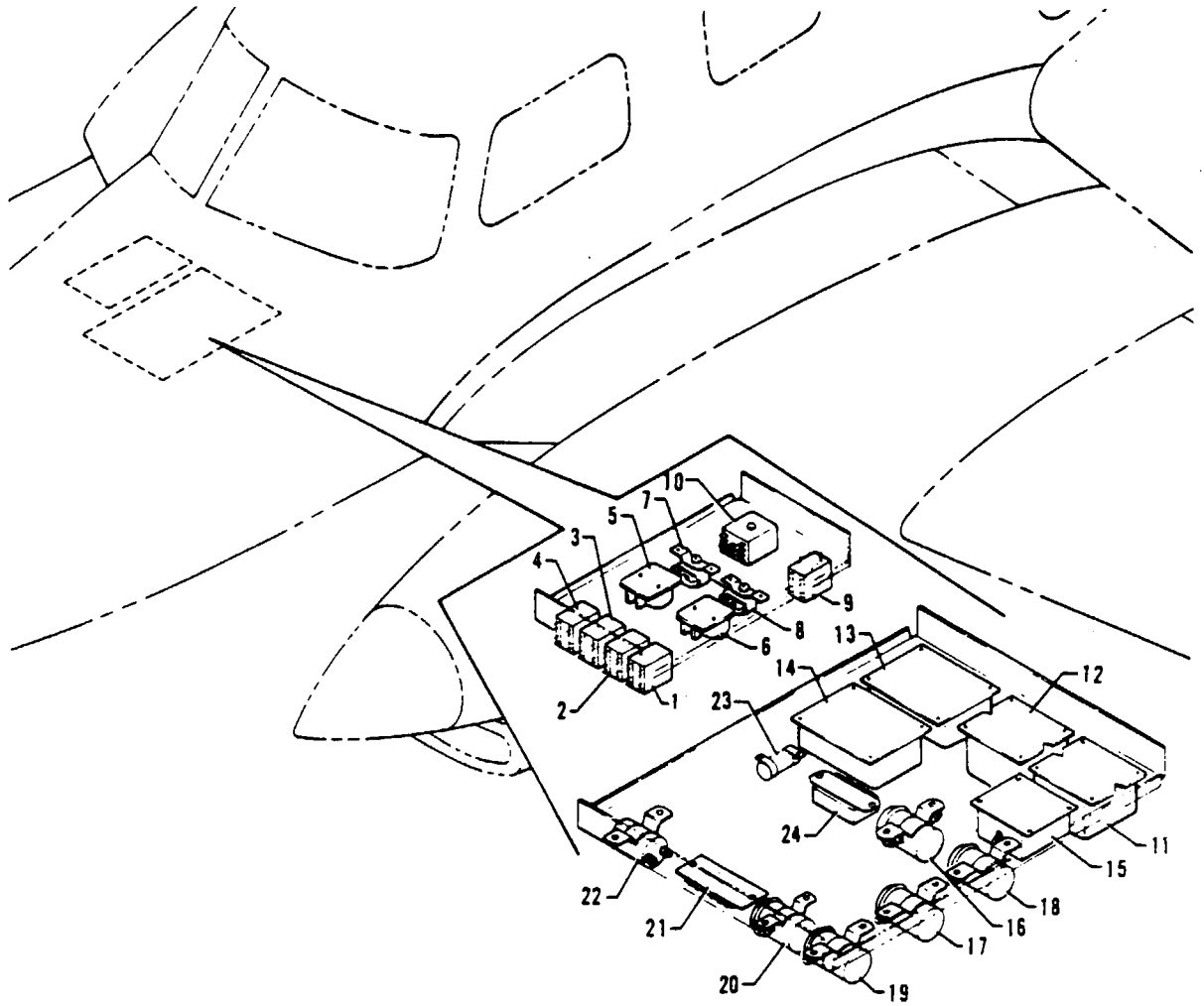

1 RECIRCULATOR
2 RIGHT ENGINE STARTER RELAY
3 LEFT ENGINE STARTER RELAY
4 OPTIONAL AUX HEAT RELAY
5 POWER CONTROL RELAY, LEFT DEICE
6 POWER CONTROL RELAY, RIGHT DEICE
7 MOTOR CONTROL RELAY, LEFT DEICE
8 MOTOR CONTROL RELAY, RIGHT DEICE
9 STALL WARNING
10 COMPRESSOR CLUTCH RELAY
11 LEFT VOLTAGE REGULATOR (DC CONTROL PANEL)
12 RIGHT VOLTAGE REGULATOR (DC CONTROL PANEL)
13 LEFT ENGINE DEICE
14 RIGHT ENGINE DEICE
15 LIGHTS TIMER
16. LANDING LIGHT SOLENOID
17 TAXI LIGHT SOLENOID
18 LANDING GEAR LIGHT SOLENOID
19 COMBINATION AIR BLOWER SOLENOID
20 LEFT WINDSHIELD SOLENOID
21 LEFT WINDSHIELD TIMER
22 LEFT WINDSHIELD HEAT RELAY
23 STALL WARNING RESISTOR
24 EL PANEL INVERTER

Figure 11-32 Component Location, Relay Shelf and Electrical Accessory Shelf PA-31T S/N 31T-8120001 and up and PA-31T1 S/N 31T-8104001 and up

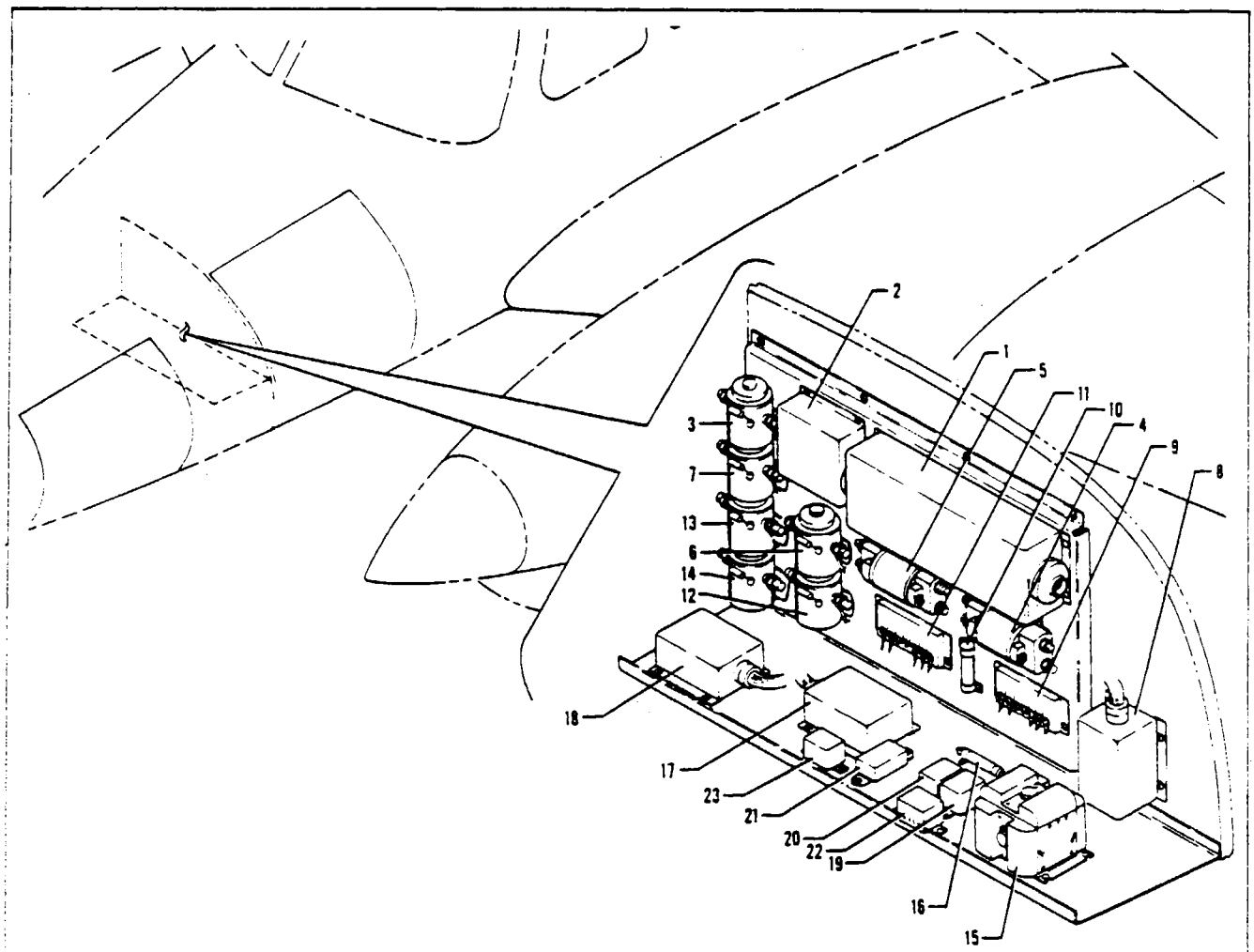

1 ANNUNCIATOR CONTROLLER
2 LIGHT TIME DELAY
3 LANDING LIGHT SOLENOID
4 RIGHT WINDSHIELD HEAT COIL
5 LEFT WINDSHIELD HEAT COIL
6 LEFT WINDSHIELD HEAT SOLENOID
7 TAXI LIGHT SOLENOID
8 FLAP CONTROL AMPLIFIER
9 RIGHT WINDSHIELD HEAT TIMER
10 STALL WARNING HEAT DROPPING RESISTOR
11 LEFT WINDSHIELD HEAT TIMER
12 RIGHT WINDSHIELD HEAT SOLENOID
13 LANDING GEAR LIGHT SOLENOID
14 RECOGNITION LIGHT SOLENOID (OPT)
15 DIMMER CONTROL BOX
16 RESISTOR (WINDSHIELD)
17 RIGHT VOLTAGE REGULATOR
18 LEFT VOLTAGE REGULATOR
19 LEFT STARTER RELAY
20 RIGHT STARTER RELAY
21 INVERTER
22 STALL WARNING HEAT RELAY
23 E C S BY-PASS RELAY

Figure 11-33. Components Location. Relay Shelf and Electrical Accessory Shelf PA-31T2 S N 31T-8166001 and up

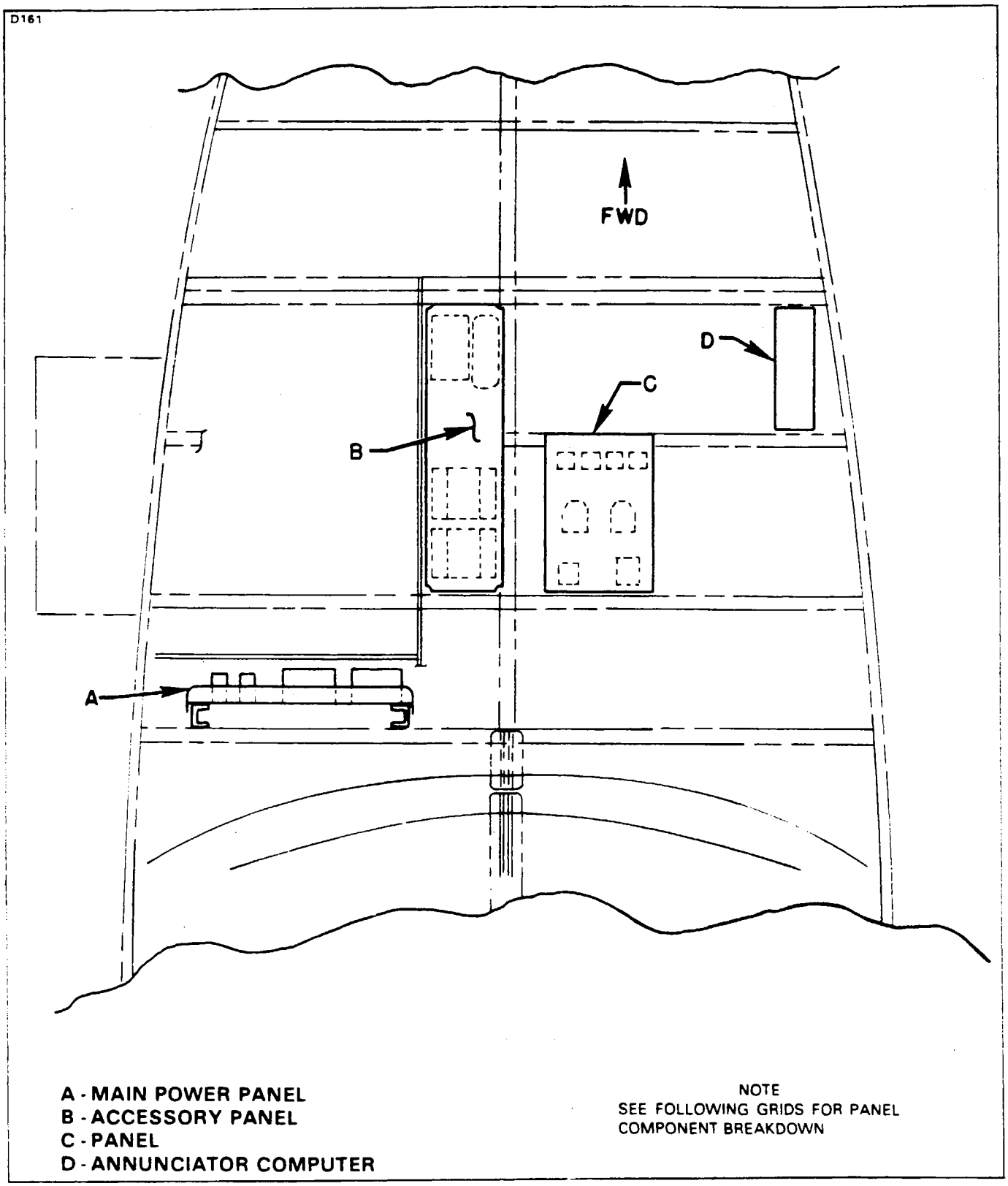

Figure 11-34 Forward Electrical Panel Locations, Cheyenne IA

D163

A - MAIN POWER PANEL

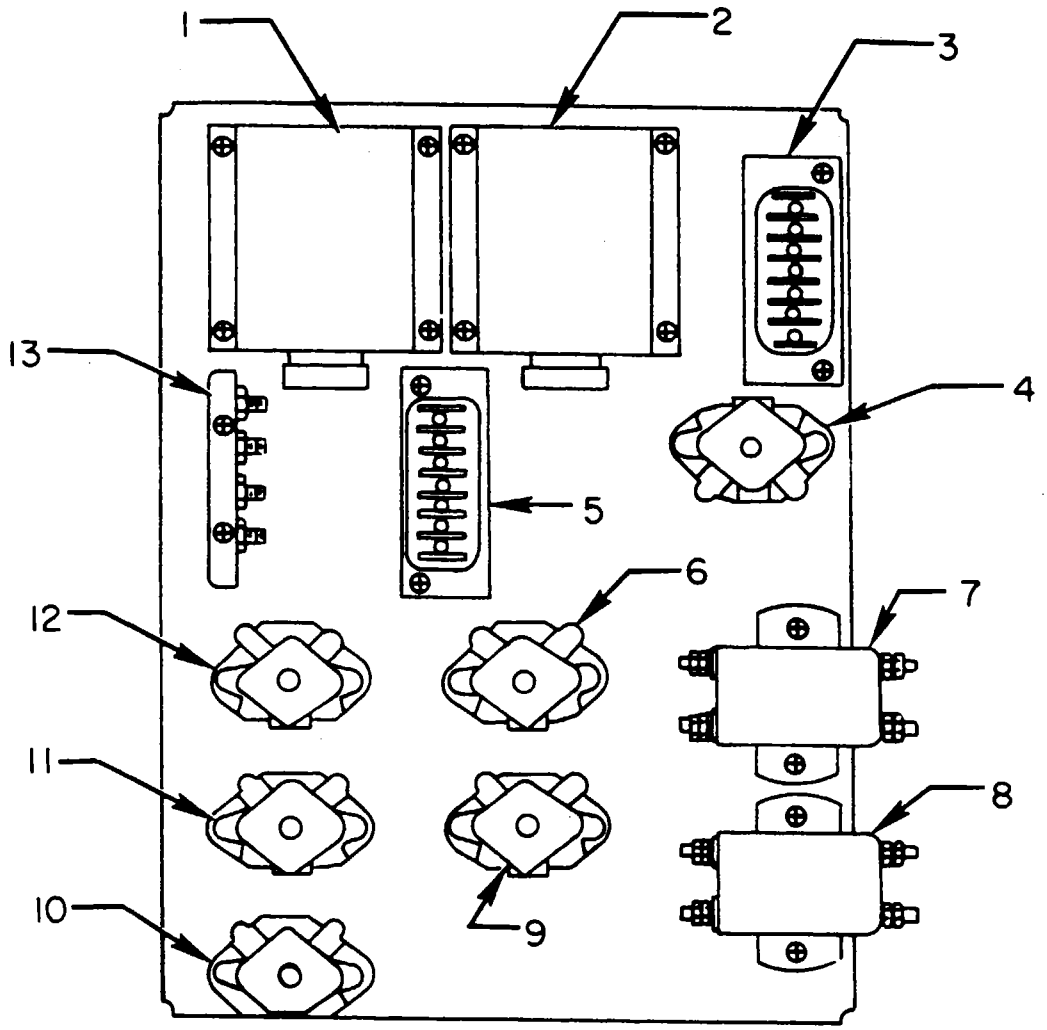

1 RIGHT VOLTAGE REGULATOR
2 LEFT VOLTAGE REGULATOR
3 LEFT WINDSHIELD HEAT TIMER
4 LEFT WINDSHIELD HEAT RELAY
5 RIGHT WINDSHIELD HEAT TIMER
6 RIGHT WINDSHIELD HEAT RELAY
7 LEFT WINDSHIELD HEAT CONTACTOR
8 RIGHT WINDSHIELD HEAT CONTACTOR
9 COMBUSTION AIR BLOWER RELAY
10 LANDING GEAR LIGHT RELAY
11 TAXI LIGHT RELAY
12 LANDING LIGHT RELAY
13 GROUND BUSS

Figure 11-34 Forward Electrical Panel Locations, Cheyenne IA (cont.)

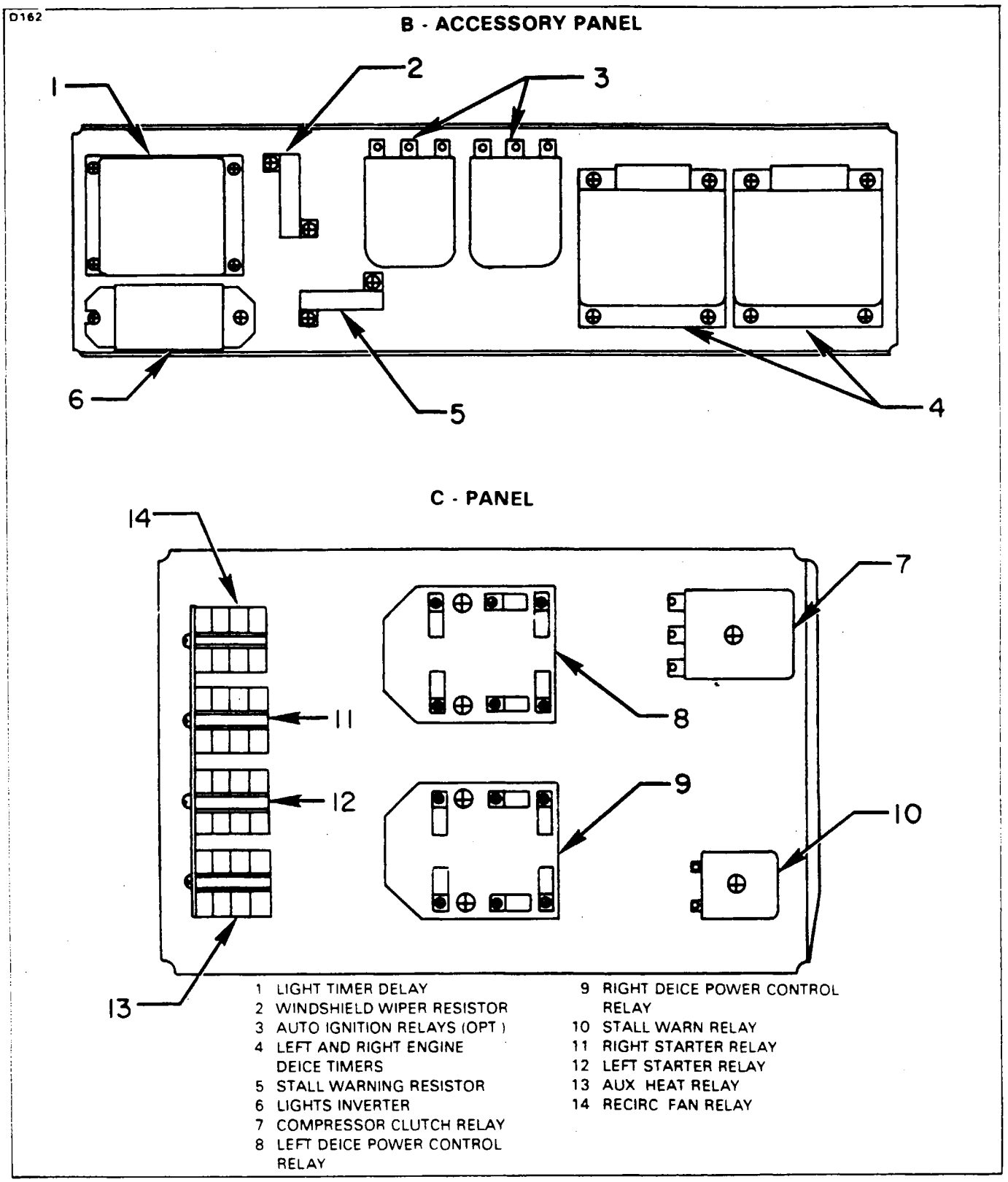

Figure 11-34 Forward Electrical Panel Locations. Cheyenne IA (cont)

4F5 THRU 4L24
INTENTIONALLY LEFT BLANK

Cheyenne

AIRPLANE

SERVICE MANUAL

CARD 5 OF 8

PA-31T CHEYENNE

PA-31T CHEYENNE II

PA-31T1 CHEYENNE I

PA-31T1 CHEYENNE IA

PA-31T2 CHEYENNE II XL

PIPER AIRCRAFT CORPORATION

PART NUMBER 753 826

5A1

JULY 2, 1984
INTERIM REVISION: OCTOBER 15, 1997

SERIAL NUMBER INFORMATION

PA-31T, CHEYENNE

Serial Numbers 31T-7400002 to 31T-7720069 inclusive.

PA-31T, CHEYENNE II

Serial Numbers 31T-7820001 to 31T-8120104 inclusive.

PA-31T1, CHEYENNE I

Serial Numbers 31T-7804001 to 31T-8104101 inclusive.

PA-31T1, CHEYENNE IA

Serial Numbers 31T-8304001 to 31T-8304003 inclusive;
(then, serial number series changed to)
Serial Numbers 31T-1104004 to 1104017 inclusive.

PA-31T2, CHEYENNE II XL

Serial Numbers 31T-8166001 to 31T-8166076 inclusive;
(then, serial number series changed to)
Serial Numbers 31T-1166001 to 1166008 inclusive.

AEROFICHE EXPLANATION AND REVISION STATUS

Service manual information incorporated in this set of Aerofiche cards has been arranged in accordance with general specifications of Aerofiche adopted by General Aviation Manufacturer's Association, (GAMA)

Information compiled in this Aerofiche Service Manual will be kept current by revisions distributed periodically. These revisions supersede all previous revisions and are complete Aerofiche card replacements and supersede Aerofiche cards of same number in set.

Conversion of Aerofiche alpha/numeric code numbers:
First number is Aerofiche card number.
Letter is horizontal line reference per card.
Second number is vertical line reference per card.
Example: 2J16 Aerofiche card number two of given set, Grid location J16.

To aid in locating the various chapters and related service information desired, the following is provided

1. At the beginning of Aerofiche Card No. 1:
   a. A complete Section Index for all fiche in this set.
   b. A complete list of Illustrations for all fiche in this set.
   c. A complete list of Tables for all fiche in this set.
   d. A complete list of Charts for all fiche in this set.
2. At the beginning of each subsequent Aerofiche Card:
   a. A complete Section Index for all fiche in this set.
   b. A complete list of Illustrations for that fiche only.
   c. A complete list of Tables for that fiche only.
   d. A complete list of Charts for that fiche only.
3. A complete Table of Contents showing paragraph titles and appropriate grid location numbers is given at the beginning of each Section relating to the information within that Section.
4. Identification of revised material:
   Revised text and illustrations are indicated by a black vertical line along the left-hand margin of the frame, opposite revised, added or deleted material. Revision lines indicate only current revisions with changes and additions to or deletions of existing text and illustrations. Changes in capitalization, spelling, punctuation, indexing, physical location of material, or complete page additions are not identified by revision lines.

AEROFICHE EXPLANATION AND REVISION STATUS (cont)

5. Revisions to Service Manual 753 826 issued December 1973 are as follows:

Revision	Publication Date	Aerofiche Card Effectivity
ORG731208	December 8, 1973	
CR810206	February 6, 1981	1, 2, 3, 4, 5, 6, 7 and 8
PR810923	September 23, 1981	1, 2, 3, 4, 5, 6, 7 and 8
PR810925	September 25, 1981	1 Only
PR820215	February 15, 1982	1, 2, 3, 4, 5, 6, 7 and 8
PR821015	October 15, 1982	1, 2, 3, 4, 5, 6, 7 and 8
PR830425	April 25, 1983	1, 2, 3, 4, 5, 6, 7 and 8
PR840105	January 5, 1984	1, 2, 3, 4, 5, 6, 7 and 8
PR840323	March 23, 1984	1, 2, 3, 4, 5, 6, 7 and 8
PR840702	July 2, 1984	1, 2, 3, 4, 5, 6, 7 and 8
IR860220	February 20, 1986	3
IR860430	April 30, 1986	3
IR860821	August 21, 1986	1
IR871009	June 15, 1988	2
IR900313	March 13, 1990	1
IR941019	October 19, 1994	1 and 2
IR950320	March 20, 1995	1
IR971015 *	October 15, 1997	1, 2, 3, 4, 5, 6, 7 and 8

*** INTERIM REVISION TO SERVICE MANUAL 753-826**

Revisions appear in all eight Aerofiche cards. Discard your entire existing Aerofiche card set (Cards 1 - 8) and replace it with the revised Aerofiche card set (Cards 1 - 8) dated 10/15/97.

Consult the Customer Service Information Catalog Aerofiche (P/N 1753-755) for current revision dates for this manual.

SECTION INDEX

SECTION	AEROFICHE CARD NO. 1	GRID NO.
I	INTRODUCTION	1A19
II	HANDLING AND SERVICING	1A22
III	INSPECTION	1D23
IV	STRUCTURES	1E13
V	SURFACE CONTROLS	1I8
	AEROFICHE CARD NO. 2	
VI	HYDRAULIC SYSTEM	2A10
VII	LANDING GEAR AND BRAKE SYSTEM	2D19
VIII	POWER PLANT (PA-31T AND PA-31T1)	2I11
	AEROFICHE CARD NO. 3	
VIIIA	POWER PLANT (PA-31T2)	3A8
IX	FUEL SYSTEM	3D7
X	INSTRUMENTS	3F2
	AEROFICHE CARD NO. 4	
XI	ELECTRICAL SYSTEM	4A7
	AEROFICHE CARD NO. 5	
XII	ELECTRONICS	5A9
XIII	ENVIRONMENTAL CONTROL SYSTEM (PA-31T AND PA-31T1)	5B1
	AEROFICHE CARD NO. 6	
XIIIA	ENVIRONMENTAL CONTROL SYSTEM (PA-31T2)	6A8
XIV	ACCESSORIES AND UTILITIES	6C1
	AEROFICHE CARD NO. 7	
XV	ELECTRICAL SCHEMATICS (PA-31T AND PA-31T1)	7A5
	AEROFICHE CARD NO. 8	
XVA	ELECTRICAL SCHEMATICS (PA-31T2)	8A5

LIST OF ILLUSTRATIONS

Figure		Aerofiche Grid No.
12-1.	Battery Connections; Two Year-Magnesium	5A12
12-2.	Pilot's Remote Switch and Emergency Locator Transmitter; Schematic	5A13
12-3.	Pilot's Remote Switch and Emergency Locator Transmitter; Schematic	5A14
12-4.	Emergency Locator Transmitter; Schematic (Narco)	5A16
12-5.	ELT Portable Folding Antenna (Narco)	5A17
12-6.	ELT Using Fixed Aircraft Antenna (Narco)	5A17
12-7.	Avionics Master and Emergency Switch Circuit	5A19
12-8.	Avionics Antenna Locations	5A22
13-1.	Heating System Flow Diagram	5B6
13-2.	Environmental Components	5B7
13-3.	Cutaway of Heater, Showing Whirling Flame (Typical)	5B9
13-4.	Heater Cycling Switch	5B10
13-5.	Combustion Air Blower and Motor Assembly (57D77)	5B16
13-6.	Combustion Air Blower and Motor Assembly (89D23-1)	5B17
13-7.	Combustion Air Blower and Motor Assembly (10E58-1, 10E58-2, 16E68-1 and 16E68-2)	5B20
13-8.	Recirculation Fan and Motor Assembly (Dynamic Air)	5B21
13-9.	Recirculation Fan and Motor Assembly (Dukes)	5C6
13-10.	Spark Plug Fixture	5C9
13-11.	Wiring-Test Setup	5C9
13-12.	Ignition Unit Assembly (Typical)	5C9
13-13.	Spark Plug (P/N 39D18) Gap Adjustment and Tool	5C10
13-14.	Spark Plug(10E75-1 and 10E75-2)	5C11
13-15.	Fuel Pressure Relief Valve Bench Test	5C16
13-16.	Test Setup Fuel Regulator	5C17
13-17.	Heater Assembly Exploded View (62D33)	5C20
13-18.	Heater Assembly Exploded View (62D33-1 and 62D33-2)	5C21
13-19.	Heater Assembly Exploded View (10E21-1)	5C23
13-20.	Heater Assembly Exploded View (10E21-2)	5D2
13-21.	Seal Plate, Plugs and Caps for Combustion Tube Leak Test	5D5
13-22.	Test Setup-Combustion Air Pressure Switch	5D7
13-23.	Suggested Setup for Heater Operation Test	5D10
13-24.	Suggested Wiring Connections for Heater Operation Test	5D10
13-25.	Auxiliary Heater and Switch	5D18
13-26.	Air Conditioning Flow Diagram	5D24
13-27.	Manifold Set Operation	5E3
13-28.	Charging and Evacuation Schematic (Charging Stand Method)	5E6
13-29.	Charging Stand, J-23500	5E7
13-30.	Charging Schematic (Refrigerant Drum Method)	5E9
13-31.	Compressor and Drive Assembly (Dual Belt)	5E10
13-32.	Belt Inspection	5E11
13-33.	Leak Test	5E12
13-33a.	Positioning Sankyo Compressor Internal Parts (S/N 31T-8304001 and up)	5E15

LIST OF ILLUSTRATIONS (cont.)

Figure		Aerofiche Grid No.
13-34.	Removing Driven Plate	5E16
13-35.	Drive and Driven Plates	5E16
13-36.	Aligning Driven Plate Key	5E17
13-37.	Installing Driven Plate	5E17
13-38.	Checking Air Gap	5E17
13-39.	Removing Pulley Retaining Ring	5E17
13-40.	Removing Pulley and Drive Plate	5E19
13-41.	Removing Bearing	5E19
13-42.	Installing Pulley and Drive Plate Bearing	5E19
13-43.	Installing Pulley and Drive Plate	5E19
13-44.	Removing Coil Housing Retaining Ring	5E20
13-44a.	Magnetic Clutch Assembly (Sankyo Compressor) (S/N 31T-8304001 and up)	5E22
13-45.	Drive Housing and Driver Assembly	5E23
13-46.	Fan and Condenser	5F3
13-47.	Expansion Valve	5F6
13-48.	Evaporator Control Valve	5F6
13-49.	Component Installation	5F7
13-50.	Installation of Seco 7 Seals	5F10
13-51.	Inspection Points (Air Conditioning System)	5F10
13-52.	Pressurization System Schematic (Dukes)	5F22
13-53.	Cabin Pressure Test Units (Typical)	5G1
13-54.	Pressurization Test Hookup	5G2
13-55.	Fabricated Hose Plug	5G4
13-56.	Fabricated Reducer	5G4
13-57.	Isobaric Valve	5G7
13-58.	Safety Valve	5G7
13-59.	Cleaning of Pressurization Controller (Typical)	5G14
13-60.	Cabin Altitude Controller (Typical)	5G18
13-61.	Door Seal System	5G20
13-62.	Controller Adjustment	5G21
13-63.	Cabin Altitude Vs. Aircraft Altitude	5G22
13-64.	Cabin Pressure Control System Schematic (Garrett)	5H4
13-65.	Pressurization System Schematic (Garrett)	5H5
13-66.	Safety or Isobaric Valve Schematic	5H11
13-67.	Cabin Air Pressure Outflow Valve Controller Schematic	5H14

LIST OF TABLES

Table		Aerofiche Grid No.
XII-I.	Index-Electronic Installation Schematics and Harness	5A10
XIII-I.	Leading Particulars (Axial Flow Fan) (Dynamic Air)	SC1
XIII-II.	Troubleshooting Chart (Recirculating Fan) (Dynamic Air)	5C2
XIII-III.	Inspection	5C14
XIII-IV.	Troubleshooting Chart (Heating)	5D14
XIII-V.	Troubleshooting Chart (Auxiliary Heater)	5D20
XIII-VI.	Temperature Pressure Chart (Standing System)	5E1
XIII-VII.	Aluminum Tubing Torque	5E2
XIII-VIII.	Vacuum Vs. Temperature	5E6
XIII-IX.	Compressor Belt Tension	5E13
XIII-X.	Troubleshooting Chart (Air Conditioning)	5F11
XIII-XI.	Cabin Differential Pressure Switch Specifications	5F21
XIII-XIA.	Troubleshooting Chart (Pressurization System) (DUKES)	5G23
XIII-XII.	Troubleshooting Chart (Pressurization System) (GARRETT)	5H15

THIS PAGE INTENTIONALLY BLANK

SECTION XII

ELECTRONICS

Paragraph		Aerofiche Grid No.
12-1.	Introduction	5A11
12-2.	Emergency Locator Transmitter (Garrett Mfg. LTD.)	5A11
12-3.	Description	5A11
12-4.	Battery Removal and Installation (Two Year, Magnesium)	5A11
12-5.	Emergency Locator Transmitter (Communications Components Corp.)	5A14
12-6.	Description	5A14
12-7.	Battery Removal and Installation (Communications Components Corp.)	5A14
12-8	Emergency Locator Transmitter (Narco)	5A15
12-9.	Description	5A15
12-10.	Battery Removal and Installation (Narco)	5A15
12-11.	Testing Emergency Locator Transmitter	5A18
12-12.	Description, Operation and Testing of Pilot's Remote Switch	5A19
12-13.	Avionics Master and Emergency Switch Circuit	5A20
12-14.	Description and Operation	5A20
12-15.	Autoflight	5A20
12-16.	General	5A20
12-17.	Non - Piper A.F.C.S. Equipment Contacts	5A20
12-18.	Piper A.F.C.S. Equipment	5A21

TABLE XII-I. INDEX - ELECTRONIC INSTALLATION; SCHEMATICS AND HARNESSES

Subject	Figure	Aerofiche Grid No.
Avionics Antenna Locations	12-8	5A22
Avioncs Master and Emergency Switch Circuit	12-7	5A19
Battery Connections; Two Year, Magnesium	12-1	5A12
Emergency Locator Transmitter Schematic (Narco)	12-4	5A16
ELT Portable Folding Antenna (Narco)	12-5	5A17
ELT Using Fixed Aircraft Antenna (Narco)	12-6	5A17
Pilot's Remote Switch and Emergency Locator Transmitter; Schematic	12-2	5A13
Pilot's Remote Switch and Emergency Locator Transmitter; Schematic	12-3	5A14

SECTION XII

ELECTRONICS

12-1. INTRODUCTION. This section of the manual is divided into two parts. The first part contains information necessary to perform operational checks of the Emergency Locator Transmitter (ELT) and Pilot's Remote Switch used with the ELT. Included are the appropriate removal and installation instructions to facilitate battery replacement. The second part consists of schematics and harnesses of the various configurations of avionics equipment installations. (Refer to Table XII-I.)

12-2. EMERGENCY LOCATOR TRANSMITTER (GARRETT MFG. LTD.).

12-3. DESCRIPTION. The electrical power for the ELT is totally supplied by its own self contained battery. FAA regulations require that the battery be replaced at the expiration date printed on the battery or, if the transmitter has been used in an emergency situation or if it has more than one hour of accumulated test time. To replace the battery pack in the transmitter, it is necessary to remove the transmitter from the aircraft. (Refer to Paragraph 12-4.)

12-4. BATTERY REMOVAL AND INSTALLATION. (2 year, magnesium battery, refer to Figure 12-1.) The ELT is located underneath the dorsal fin between sta. 304.75 and sta. 317.00.

a. Remove the access panel on the dorsal fin between sta. 296.00 and sta. 317.75 by removing the screws.

b. Set the ON/ARM/OFF switch on the transmitter to the OFF position.

c. Disconnect the antenna coax from the transmitter.

d. Disconnect the harness to the pilot's remote switch from the transmitter.

e. Remove the rear mounting bracket by pulling the plastic knob out. Remove the transmitter from the airplane.

f. Remove the two long or four short screws securing the transmitter plain end cap. Remove the plain end cap.

g. Disconnect the battery connector from the board terminals.

h. Withdraw the battery pack from the transmitter case.

i. Before installing the new battery pack, check the replacement date printed on the battery. Transfer this date onto the outside of the ELT.

j. Slide the new battery pack, plain end first, into transmitter. It may be necessary to rotate the battery slightly to get it seated properly in the transmitter case and to achieve correct orientation of the battery connector.

k. Connect the battery connector to board terminals.

l. Insure O-ring is fitted in plain end cap and correctly seated.

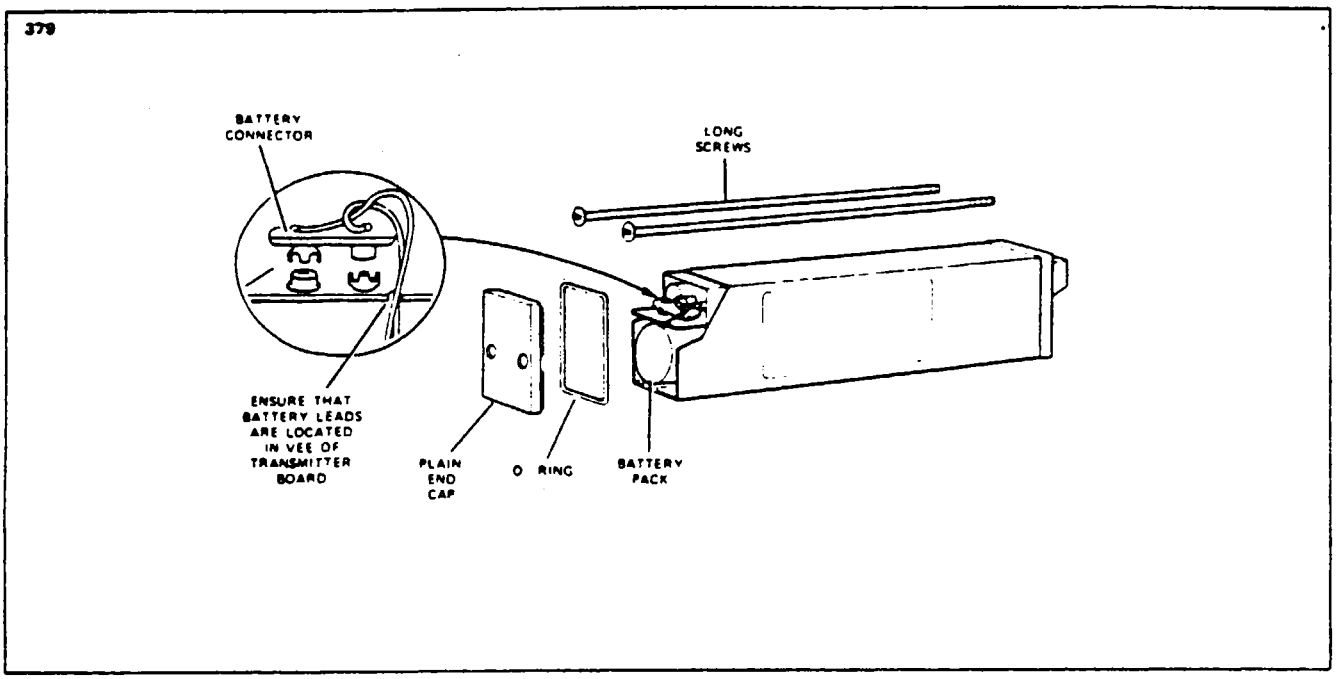

Figure 12-1. Battery Connections;Two Year - Magnesium

m. Refit end cap and secure with the screws previously removed.

NOTE

Do not overtighten the end cap screws.

n. Place transmitter into its mounting bracket; replace rear mounting bracket by pushing plastic knob into place.

o. Connect the pilot's remote switch harness to the transmitter.

p. Connect the antenna coax to the transmitter.

q. Install the access panel on the dorsal fin between sta. 296.00 and sta. 317.75 and secure with appropriate screws. Make an entry in the aircraft logbook, including the new battery run out date.

NOTE

Before installing access panel ascertain that transmitter switch is in the ARM position. It may also be advisable to test the unit operation before installing the access panel. (Refer to paragraph 12-11.)

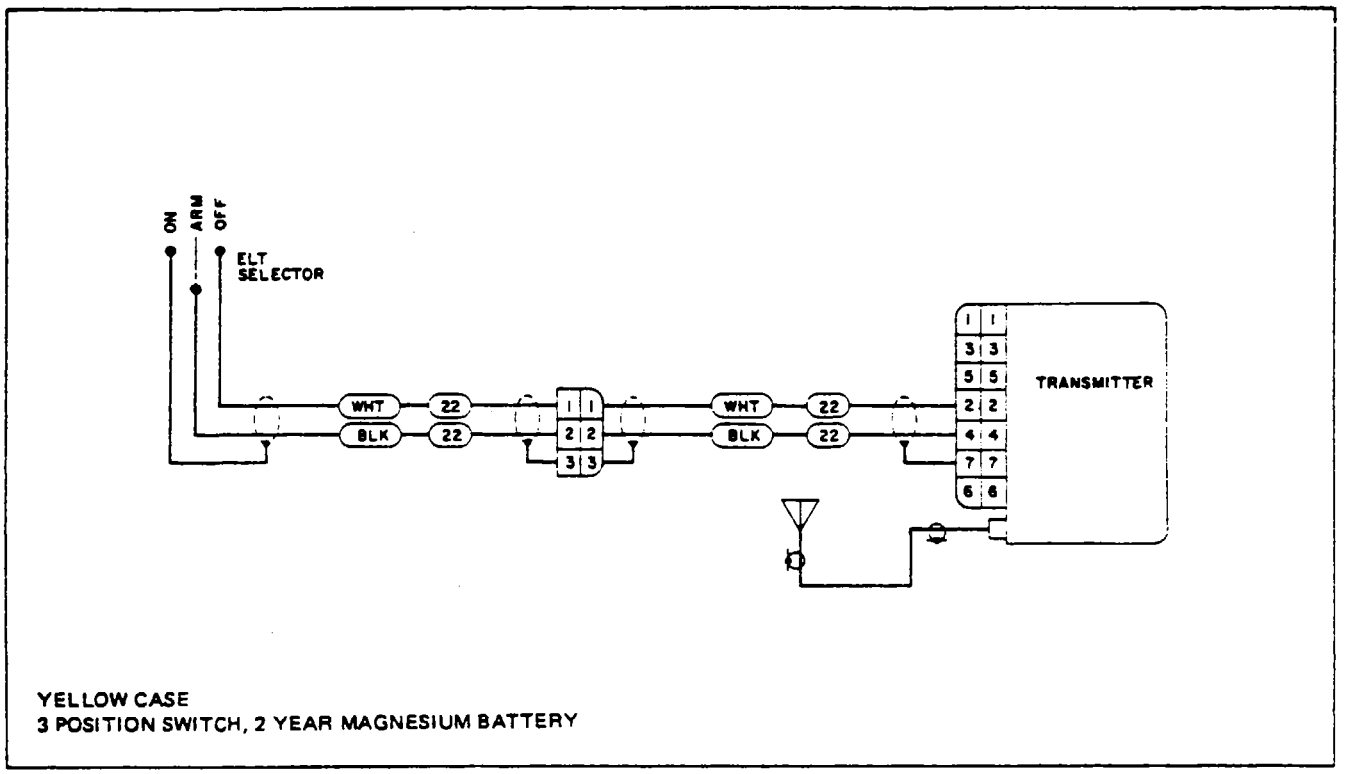

Figure 12-2. Pilot's Remote Switch and Emergency Locator Transmitter; Schematic

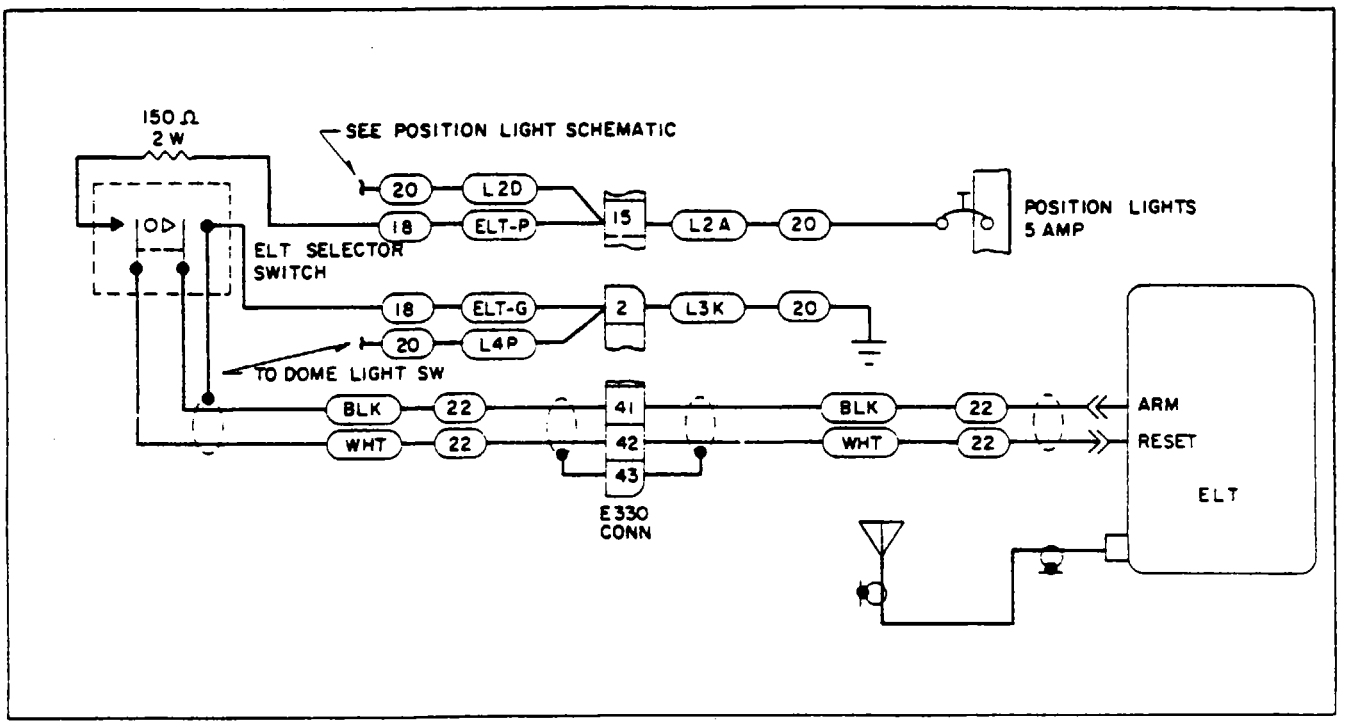

Figure 12-3. Pilot's Remote Switch and Emergency Locator Transmitter; Schematic

12-5. EMERGENCY LOCATOR TRANSMITTER. (Communications Components Corp.)

12-6. DESCRIPTION. The electrical power for the ELT is totally supplied by its own self-contained battery. However, aircraft power is required to shut off transmitter with the remote switch. For portable use, the ELT can be easily removed from its mounting in the aircraft. To comply with FAA regulations, the battery must be replaced on or before the replacement date marked on battery pack label. The battery must also be replaced if the transmitter has been used in an emergency situation or if accumulated test time exceeds one hour.

12-7. BATTERY REMOVAL AND INSTALLATION. (Communications Components Corp.) The ELT is located underneath the dorsal fin between sta. 304.75 and sta. 317.00.

a. Remove the access panel on the dorsal fin between sta. 296.00 and sta. 317.75 by removing the screws.

b. Rotate the ON/ARM/OFF switch to the OFF position.

c. Disconnect the antenna coax cable (twist left, then pull outward).

d. Disconnect the harness to the pilot's remote switch.

e. Remove the forward mounting bracket by pulling the black plastic knob out. Remove the transmitter from the airplane.

f. Remove the six Phillips-head screws securing the transmitter cover. Remove the cover.

g. Lift out the old battery pack.

h. Copy the expiration date on the battery into the space provided on the external ELT name and date plate.

i. Disconnect and replace with a new battery pack. The nylon battery connector is a friction fit and is easily removed by pulling on the exposed end.

j. Insert transmitter into airplane and fit into place. Reinstall mounting bracket by pushing the black plastic knob into place.

k. Reconnect the pilot's remote switch harness and the antenna coax cable to the transmitter.

l. Set the ON/ARM/OFF switch to the ARM position.

m. Reinstall the access plate previously removed.

n. Make an entry in the aircraft logbook, including the new battery expiration date.

NOTE

It may be advisable to test the unit operation before installing the access panel. (See Paragraph 12-11.)

NOTE

Inspect the external whip antenna for any damage. Avoid bending the whip. Any sharply bent or kinked whip should be replaced. Antenna damage may cause structural failure of whip in flight.

12-8. EMERGENCY LOCATOR TRANSMITTER. (Narco)

12-9. DESCRIPTION. The electrical power for the ELT is totally supplied by its own self-contained battery The battery must be replaced on or before the replacement date marked on battery pack label. If the transmitter has been used in an emergency situation or it has more than one hour of accumulated test time, the battery must be replaced. To replace the battery pack in the transmitter, refer to Paragraph 12-10.

12-10. BATTERY REMOVAL AND INSTALLATION (Narco) The ELT is located under the dorsal fin between sta. 304.75 and sta. 317.00. (Refer to Figure 12-5 and 12-6.)

a. Remove the access panel on the dorsal fin.

b. Set the ON/OFF/ARM switch on the transmitter to OFF.

c. Disconnect antenna coaxial cable from ELT.

d. Remove ELT from its mounting bracket by releasing the latch on the strap and sliding the ELT off the bracket.

e. Extend the portable antenna. (See Figure 12-5.)

f. Unscrew the four screws that hold the control head to the battery casing and slide apart.

g. Disconnect the battery terminals from the bottom of the circuit board.

h. Discard old battery pack. (DO NOT EXPOSE TO FLAME.)

CAUTION

The battery pack is shipped with a sealant on the inside lip so that a water tight seal will be retained. DO NOT REMOVE THIS SEALANT.

i. Connect new battery pack terminals to the bottom of the circuit board.

j. Reinsert the control head section into the battery pack being careful not to pinch any wires, and replace the four screws. If the four holes do not line up, rotate the battery pack 180° and reinsert.

k. Slide the portable antenna back into the stowed position.

l. Place transmitter into its mounting bracket and fasten the strap latch.

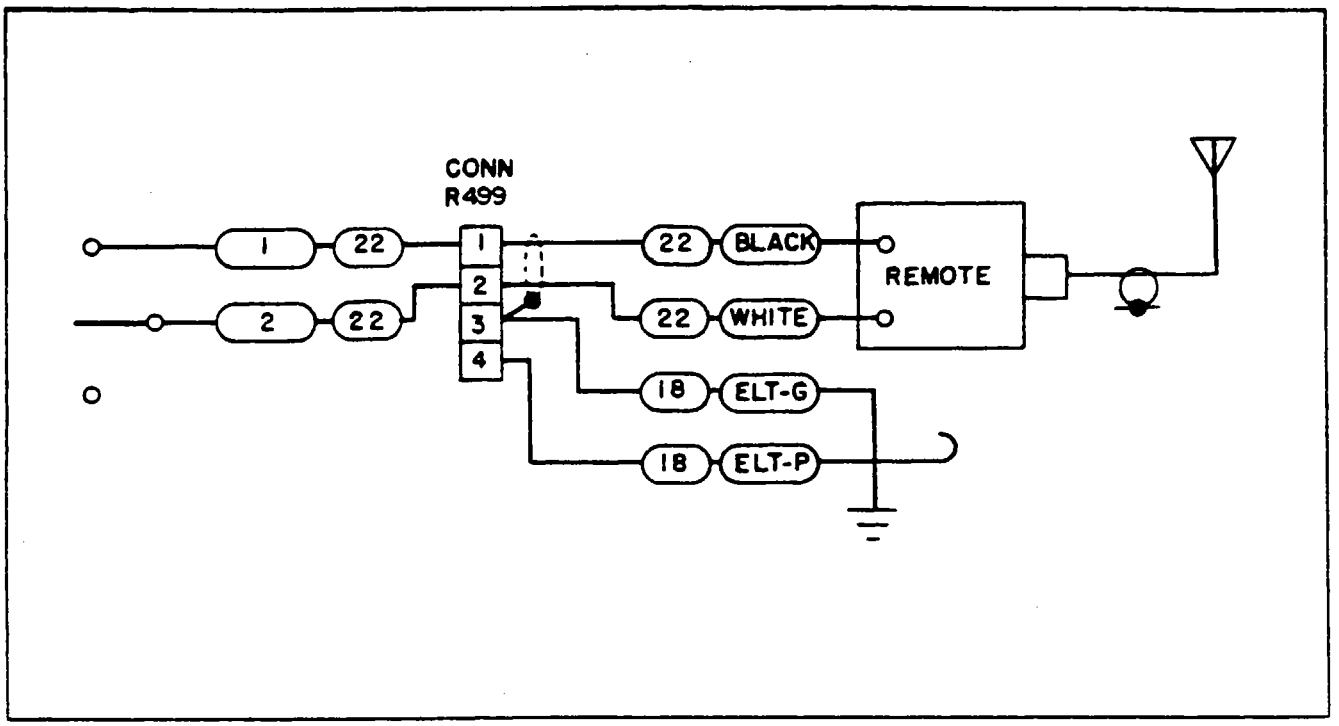

Figure 12-4. Emergency Locator Transmitter Schematic (Narco)

m. Connect the antenna coaxial cable to the ELT and ensure that the contact separator is inserted between the antenna contact finger and the portable antenna. (Refer to Figure 12-6.)

n. Press RESET button and set ON/OFF/ARM switch to ARM.

o. Make an entry in the aircraft logbook, including the new battery expiration date.

p. A unit operational check may now be performed on the ELT. (Refer to Testing Emergency Locator Transmitter, Paragraph 12-11.)

NOTE

Inspect the external whip antenna for any damage. Avoid bending the whip. Any sharply bent or kinked whip should be replaced. Antenna damage may cause structural failure of whip in flight.

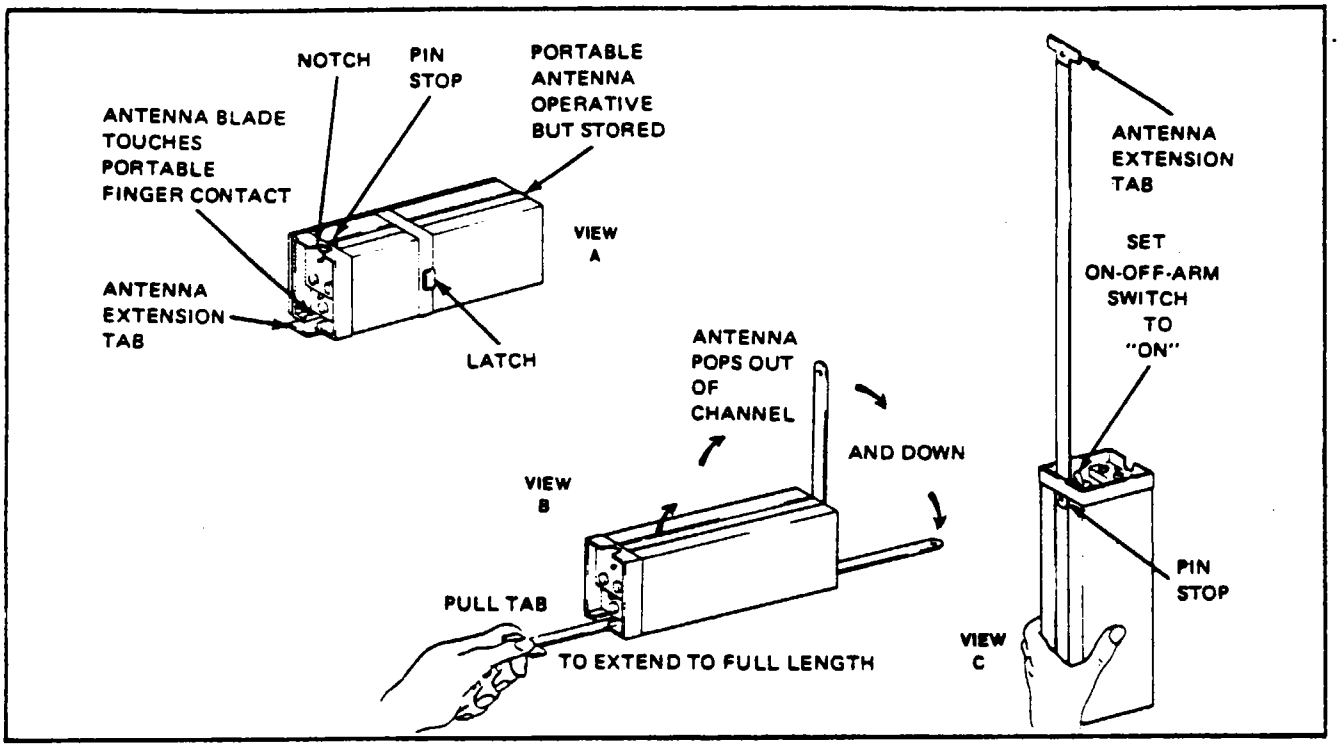

Figure 12-5. ELT Portable Folding Antenna (Narco.)

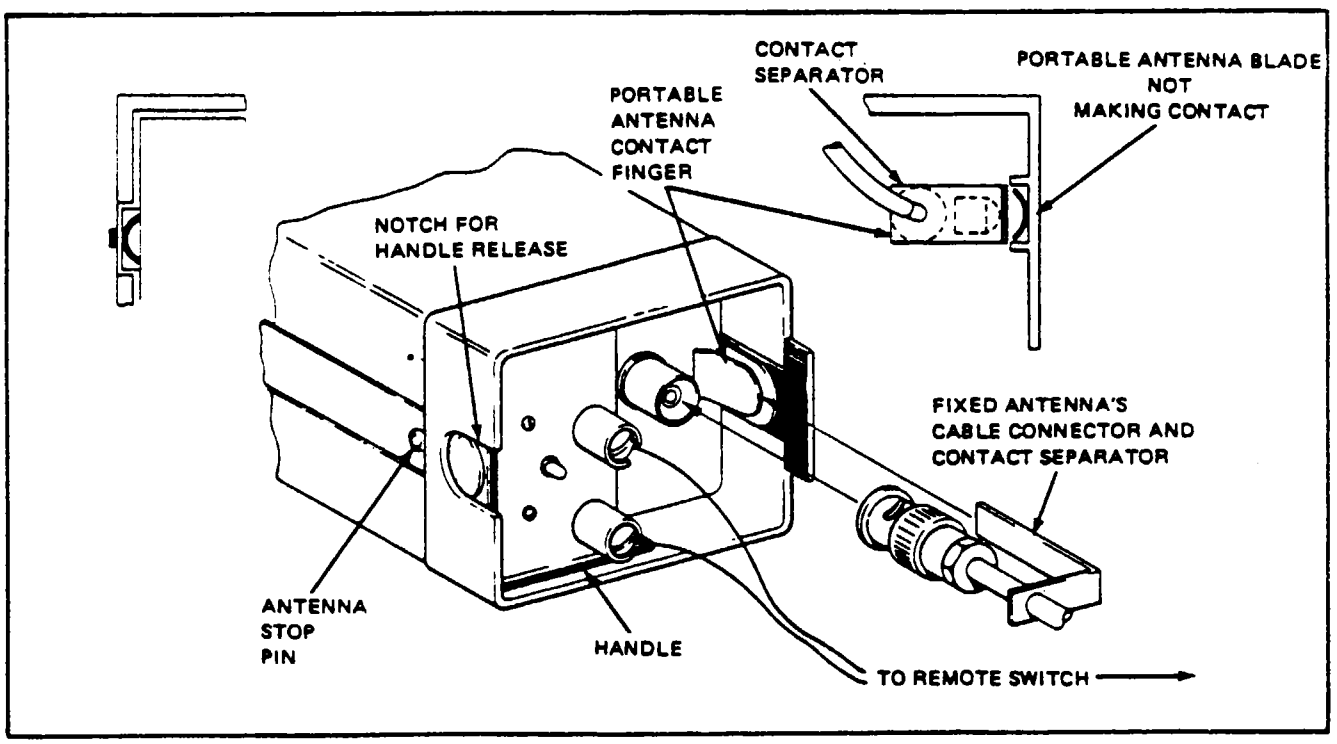

Figure 12-6. ELT Using Fixed Aircraft Antenna (Narco.)

12-11. TESTING EMERGENCY LOCATOR TRANSMITTER. The transmitter operates on the emergency frequencies of 121.5 and 243 MHz; both of these frequencies are monitored by the various FAA installations. Before performing any operational test of the ELT, the following precautions should be observed:

CAUTION

Testing of an ELT should be conducted in a screen room or metal enclosure to ensure that electromagnetic energy is not radiated during testing. If a shielded enclosure is not available, testing may be performed in accordance with the following procedures:

1. Test should be no longer than three audio sweeps.
2. If the antenna is removed, a dummy load should be substituted during the test.
3. Test should be conducted only within the time period made up of the first five minutes after any hour.
4. If the operational tests must be made at a time not included within the first five minutes after the hour, the test should be conducted with the closest FAA Tower or Flight Service Station.

Consult FAA Advisory Circular AC 20-81 for detailed information concerning the above caution.

a. Remove the access panel or cover to gain access to the transmitter.
b. Turn the aircraft master switch ON.
c. Tune the aircraft communications receiver volume up until a slight background noise is heard.

NOTE

If the aircraft is not fitted with a communications receiver, request that the tower listen for your test.

d. On the transmitter, set the ON/ARM/OFF switch to the ON position. Keep the switch in this position for only a few seconds; then set to the OFF position or ARM if there is no OFF. Return to the ARM position.

NOTE

The test transmission should have been picked up by the aircraft communications receiver and/or control tower. During cold weather, there may be a slight delay before transmission occurs.

e. A transmitter which is functioning properly should emit a characteristic downward swept tone.
f. When the test is completed, ascertain the transmitter ON/ARM/OFF switch is in the ARM position.

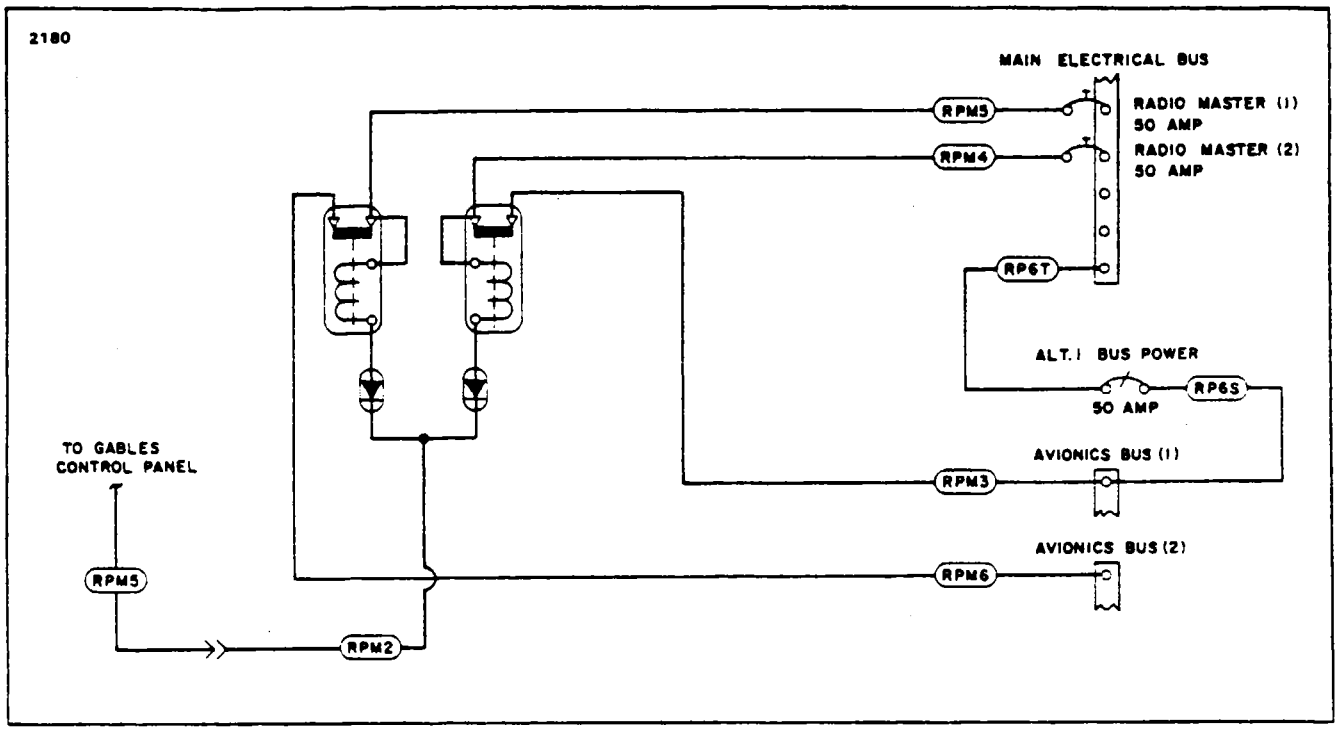

Figure 12-7. Avionics Master and Emergency Switch Circuit

g. Place the access panel on the dorsal fin between sta. 296.00 and sta. 317.00 and secure with the appropriate screws.

WARNING

Whenever the unit is checked by moving the transmitter ON/ARM/OFF switch from the ARM to the ON position, it must then be moved to the OFF position, if there is one, before reverting to the ARM position again.

CAUTION

Under normal conditions, the transmitter switch must be set to ARM.

NOTE

Inspect the external whip antenna for any damage. Avoid bending the whip. Any sharply bent or kinked whip should be replaced. Antenna damage may cause structural failure of whip in flight.

12-12. DESCRIPTION, OPERATION AND TESTING OF PILOT'S REMOTE SWITCH. (Refer to Pilot's Operating Handbook.)

12-13. AVIONICS MASTER AND EMERGENCY SWITCH CIRCUIT. (Refer to Figure 12-7.)

12-14 DESCRIPTION AND OPERATION. Electrical power for the various avionics components is controlled by the Avionics Master Switch located in the Center Instrument Panel. This switch operates a solenoid which, when engaged, provides power from the main Electrical Bus to the #1 and #2 Avionics Busses. This circuit is protected by two 50 amp circuit breakers (Radio Master #1 and Radio Master #2) on the Main Electrical Bus.

In the event of a malfunction in the Avionics Master Switch circuit, a 50 amp Emergency Switch (Circuit Breaker) is provided between the Main Electrical Bus and the #1 Avionics Bus. With this circuit breaker engaged, power is supplied directly to the #1 Avionics Bus, allowing the avionics components operating off of this bus to be used. The Emergency Switch does not supply electrical power to the #2 Avionics Bus and all components utilizing this bus will be inoperative.

12-15. AUTOFLIGHT.

12-16. GENERAL Due to the wide varity of A.F.C.S. (Automated Flight Control System) options, it is mandatory to follow the service literature published by the individual manufacturer of the A.F C S equipment installed in any particular airplane. This includes mechanical service such as: adjusting bridle cable tension, servo removal and installation, servo clutch adjustments, etc.

12-17 NON-PIPER A.F.C S EQUIPMENT CONTACTS. Refer to the following list of AutoPilot Flight Director manufacturers to obtain service direction, parts support, and service literature

Bendix Avionics Division
2100 N.W 62nd. Street
Fort Lauderdale, Fla. 33310
(305) 776-4100 TWX 5109559884

Collins General Aviation Division
Rockwell International
Cedar Rapids, Iowa 52406
(319) 395-3625 Telex: 467-421

Edo Corporation - Avionics Division
Box 610
Municipal Airport
Mineral Wells, Texas 76067
(817) 325-2517 Telex: 76067

King Radio Corporation
400 North Rodgers Road
Olathe, Kansas 66061
(913) 782-0400 Telex. 4-2299-Kingrad

Sperry Flight Systems Avionics Div
8500 Balboa Blvrd.
P.O. Box 9028
VanNuys, CA. 91409

Global Navigation
2144 Michelson Drive
Irvine, CA. 92715
(717) 851-0119

12-18. PIPER A.F.C.S. EQUIPMENT. In the case of early models, Piper AutoPilot equipment bears the Piper name, and the appropriate Piper AutoPilot Flight Director Service Manual shall be used.

NOTE

If a Roll Axis-only AutoPilot is installed, or if no AutoPilot is installed, consult the Piper Pitch Trim Service Manual - 753 771 for manual electric pitch trim service information.

The following is a complete listing of Piper A.F.C.S. equipment service literature. It is imperative to correctly identify the AutoPilot system by "faceplate" model name, in order to consult the appropriate service manual. Each manual identifies the revision level and revision status as called out on the Master Parts Price List - Aerofiche published monthly by Piper. Consult the aircraft's parts catalog for replacement parts.

NAME	PIPER PART NO
AutoControl I II and AltiMatic I II	753 798
AutoControl III and AltiMatic III and III B	753 723
AutoControl III B and AltiMatic III B-1	761 502
AltiMatic III C	761 602
AltiMatic V and V-1	761 525
AltiMatic V F D and V F D-1	761 526
AltiMatic X F.D. A.P. and X A.P.	761 668
AutoFlite	753 720
AutoFlite II	761 481
Piper Pitch Trim (Manual-Electric)	757 771

THIS SPACE INTENTIONALLY LEFT BLANK

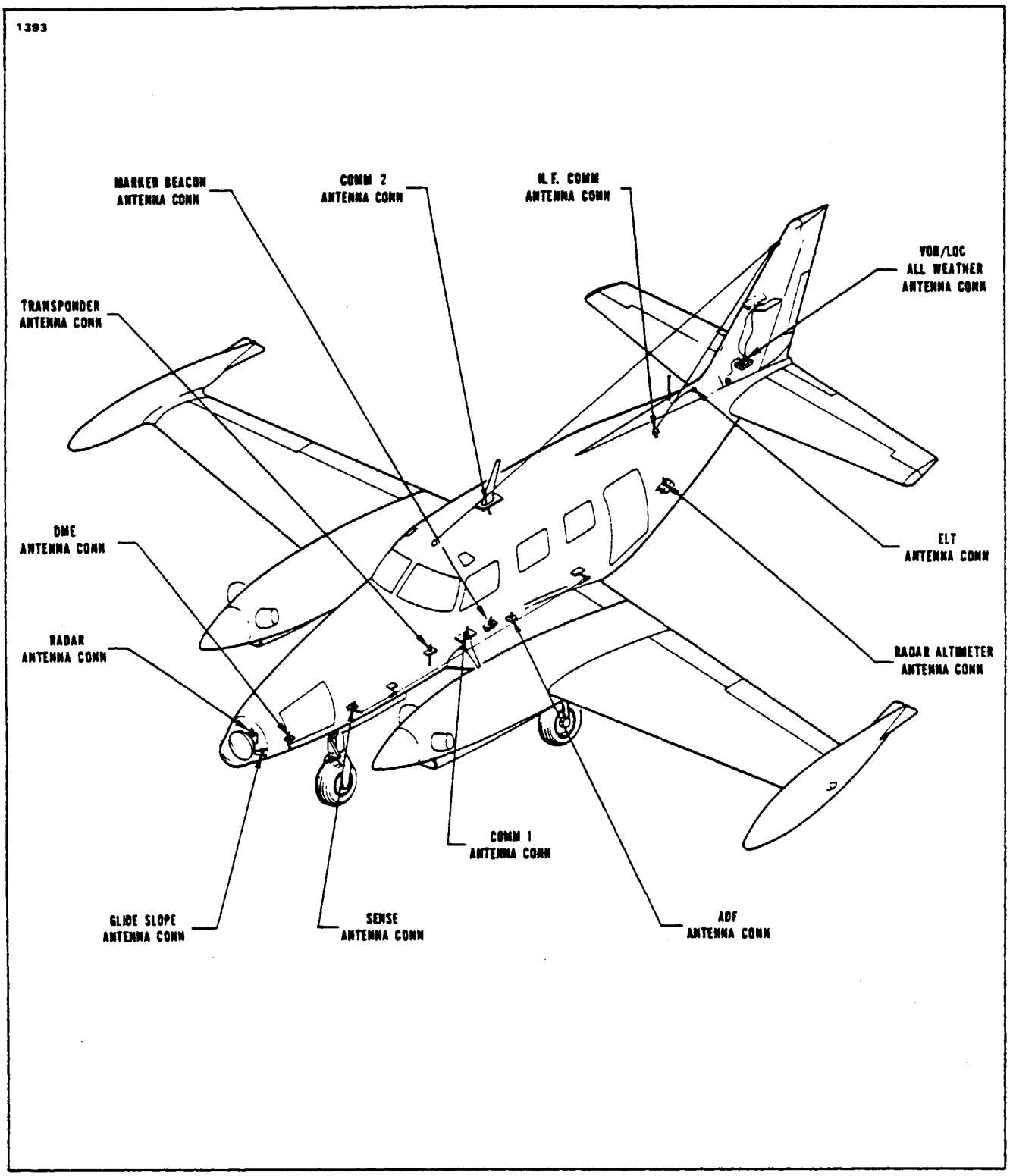

Figure 12-8. Avionics Antenna Locations

5A23

INTENTIONALLY LEFT BLANK

5A24

INTENTIONALLY LEFT BLANK

SECTION XIII
ENVIRONMENTAL CONTROL SYSTEM

Paragraph		Aerofiche Grid No.
13-1.	Introduction	5B5
13-2.	Description	5B5
13-3.	Troubleshooting	5B5
13-4.	Janitrol Heaters	5B5
13-5.	Cabin Heater System Description	5B8
13-6.	Heater Operation	5B8
13-7.	Description of Heater Components	5B8
13-8.	Spark-Spray Ignition	5B8
13-9.	Combustion Air Blower	5B8
13-10.	Fuel Pump and Heater Fuel Filter	5B9
13-11.	Heater Limit Switch	5B9
13-11a.	Heater Thermostat	5B9
13-12.	Heater Cycling Switch	5B9
13-13.	Combustion Air Pressure Switch	5B9
13-14.	Inspection of Heater and Heater Components	5B10
13-15.	Daily Inspection	5B10
13-16.	100-Hour Inspection	5B11
13-17.	Maintenance Service	5B12
13-18.	Removal of Heater	5B12
13-19.	Installation of Heater	5B13
13-20.	Heater Electrical System Checks	5B13
13-21.	Electrical Continuity Check	5B13
13-22.	Recirculating Fan Power Circuit Check	5B14
13-23.	Heater Power Circuit Check	5B14
13-24	Maintenance and Repairs	5B15
13-25.	Combustion Air Blower	5B15
13-26	Disassembly of Combustion Air Blower (57D77)	5B15
13-27	Reassembly of Combustion Air Blower (57D77)	5B18
13-28	Disassembly of Combustion Air Blower (89D23-1)	5B18
13-29	Reassembly of Combustion Air Blower (89D23-1)	5B18
13-30	Disassembly of Combustion Air Blower (10E58-1, 10E58-2, 16E68-1 and 16E68-2)	5B19
13-31.	Reassembly of Combustion Air Blower (10E58-1, 10E58-2, 16E68-1 and 16E68-2)	5B19
13-32.	Cleaning of Combustion Air Blower	5B19
13-33	Inspection and Repair of Combustion Air Blower	5B22
13-33a	Preheater Assembly	5B22
13-33b	Removal and Installation of the Combustion Air Preheater Assembly	5B22
13-34	Recirculating Fan (Dynamic Air)	5B22
13-35	Disassembly of Recirculating Fan (Dynamic Air)	5B23
13-36	Assembly of Recirculating Fan (Dynamic Air)	5B23
13-37	Cleaning of Recirculating Fan Motor (Dynamic Air)	5B24
13-38	Inspection of Recirculating Fan Motor (Dynamic Air)	5B24
13-39.	Repair of Recirculating Fan Motor (Dynamic Air)	5B24
13-40	Tests of Recirculating Fan Motor (Dynamic Air)	5C1
13-41.	Removal and Installation of Recirculating Fan and Motor (Dukes)	5C3
13-42.	Additional Service Information (Dukes)	5C3
13-42a.	Disassembly of Dukes 1092-00-3 Fan	5C3
13-42b.	Cleaning and Inspection of Dukes 1092-44-1 Motor	5C3
13-43	Servicing Dukes 1092-44-1	5C3

Paragraph		Aerofiche Grid No.
13-43a.	Reassembly of the Dukes 1092-00-3 Fan	5C4
13-44.	Spark Plug (P/N 39D18)	5C5
13-45.	Spark Plug (P/N 10E75-1 and 10E75-2)	5C12
13-46.	Ignition Unit	5C12
13-47.	Ignition Unit Removal and Installation	5C12
13-48.	Testing Ignition Unit	5C13
13-49.	Operational Test of Ignition Unit	5C13
13-50.	Vibrator	5C13
13-51.	Vibrator Removal and Installation	5C14
13-52.	Inspection of Ignition Unit	5C14
13-53.	Limit (Overheat Safety) Switch	5C14
13-54.	Cycling Switch	5C15
13-55.	Removal of Fuel Pump Pressure Relief Valve and Heater Fuel Filter	5C15
13-56.	Fuel Pressure Relief Valve Bench Test and Adjustment	5C15
13-57.	Cabin Heater Fuel Solenoid Valve Removal and Bench Test	5C16
13-58.	Cabin Heater, Fuel Regulator and Shutoff Valve	5C16
13-59.	Installation of Fuel Pump, Pressure Relief Valve and Heater Fuel Filter	5C18
13-60.	Combustion Air Pressure Switch (Earlier Models)	5C18
13-61.	Combustion Air Pressure Switch	5C18
13-62.	Overhaul Instructions	5C19
13-63.	Disassembly of Heater (62D33)	5C19
13-64.	Disassembly of Heater (62D33-1 and 62D33-2)	5C22
13-65.	Disassembly of Heater (10E21-1)	5C24
13-66.	Disassembly of Heater (10E21-2)	5D1
13-67.	Cleaning of Combustion Tube and Jacket Assembly	5D3
13-68.	Inspection of Combustion Chamber and Jacket	5D3
13-69.	Inspection of Remaining Components	5D4
13-70.	Testing	5D4
13-71.	Combustion Tube and Jacket Assembly	5D4
13-72.	Fuel Feed and Nozzle Holder Assembly	5D5
13-73.	Nozzle Spray Test	5D5
13-74.	Repair of Combustion Tube	5D6
13-75.	Testing Combustion Air Pressure Switch	5D6
13-76.	Recirculating Fan and Combustion Air Blower Test	5D7
13-77.	Reassembly of Heater (62D33)	5D7
13-78.	Reassembly of Heater (62D33-1 and 62D33-2)	5D8
13-79.	Reassembly of Heater (10E21-1)	5D9
13-80.	Reassembly of Heater (10E21-2)	5D11
13-81.	Test Procedure	5D12
13-82.	General Information	5D12
13-83.	Equipment Required	5D12
13-84.	Operational Test	5D13
13-85.	Leakage Test	5D13
13-86.	Auxiliary Heater	5D18
13-87.	Auxiliary Heater Description	5D18
13-88.	Auxiliary Heater Operation	5D18
13-89.	Removal of Auxiliary Heater Unit	5D19

Paragraph		Aerofiche Grid No.
	13-90. Installation of Auxiliary Heater Unit	5D19
13-91.	Air Conditioning System	5D21
13-92.	Cabin Air Conditioning System Description and Operation	5D21
13-93.	Troubleshooting	5D21
	13-94. Malfunction Detection	5D21
	13-95. Recommended Ground Operating Instructions	5D23
	13-96. Special Servicing Procedures	5E2
	13-97. Test Gauge and Manifold Set	5E4
	13-98. Checking System for Leaks	5E4
	13-99. Evacuating the System	5E5
	13-100. Charging the System	5E7
	13-101. Flushing the Air Conditioning System	5E9
13-102.	Compressor Service	5E9
	13-103. Removal of Compressor	5E11
	13-104. Belt Inspection	5E12
	13-105. Installation of Compressor	5E12
	13-106. Leak Testing the Compressor	5E13
	13-107. Checking and Adding Oil (Frigidaire Compressor)	5E14
	13-107a. Checking Compressor Oil Level (Sankyo Compressor)	5E14
13-108.	Magnetic Clutch, Pulley and Coil	5E18
	13-109. Removal of Driven Plate and Pulley Assembly	5E18
	13-110. Installation of Driven Plate and Pulley Assembly	5E18
	13-111. Removal of Clutch Coil and Housing (Frigidaire Compressor)	5E20
	13-112. Installation of Clutch Coil and Housing (Frigidaire Compressor)	5E20
	13-112a. Magnetic Clutch, Pulley and Coil (Sankyo Compressor)	5E20
	13-112b. Removal of Clutch, Pulley and Coil (Sankyo Compressor)	5E20
	13-112c. Installation of Clutch, Pulley and Coil (Sankyo Compressor)	5E21
	13-113. Single Belt Compressor Drive	5E22
	13-114 Removal of Driver Assembly for Belt Replacement	5E22
	13-115. Inspection and Repair of Compressor Drive	5E24
	13-116. Dual Belt Replacement	5F1
	13-117. Installation of Driver Assembly	5F2
	13-118. Removal of Drive Housing	5F2
	13-119. Installation of Drive Housing	5F2
13-120.	Fan and Condenser	5F2
	13-121. Removal of Fan and Condenser	5F2
	13-122. Installation of Condenser and Fan	5F4
13-123.	Receiver-Dryer	5F4
	13-124. Removal of Receiver-Dryer	5F4
	13-125 Installation of Receiver-Dryer	5F5
13-126.	Expansion Valve	5F5
	13-127 Removal of Expansion Valve	5F5
	13-128. Installation of Expansion Valve	5F5
13-129.	Evaporator Control Valve	5F5
	13-130. Removal of Evaporator Control Valve	5F5
	13-131. Installation of Evaporator Control Valve	5F7
13-132.	Evaporator	5F7
	13-133. Removal of Evaporator	5F7
	13-134. Installation of Evaporator	5F8
	13-135. Installation of Lines and Fittings	5F9
13-136.	Pressurization System (DUKES)	5F20
	13-137. Description and Principles of Operation	5F20
	13-138. Pressurization Controls	5F20
	13-139 Operating Instructions	5F23
	13-140. Cabin Pressurization Check	5F24

Paragraph		Aerofiche Grid No.
13-141.	Pressurization Check with Test Unit	5F24
13-142.	Dump Valve Function (Earlier Models)	5G5
13-143.	Rupture Disc Function (Earlier Models)	5G5
13-144.	Isobaric Valve Function	5G5
13-145.	Isobaric Valve Removal	5G5
13-146.	Isobaric Valve Installation	5G5
13-147.	Safety Valve Function	5G6
13-148.	Safety Valve Removal	5G6
13-149.	Safety Valve Installation	5G6
13-150.	Isobaric and Safety Valve Combined Function	5G6
13-151.	Isobaric and Safety Valve Cleaning	5G8
13-152.	Isobaric Filter Replacement	5G8
13-153.	Isobaric and Safety Valve Setup	5G8
13-154.	Safety Precautions	5G8
13-155.	System Setup Procedure	5G9
13-156.	Isobaric and Safety Valve Adjustment	5G9
13-157.	In Flight Check	5G10
13-158.	Takeoff and Climb Procedure	5G10
13-159.	Adjustment of Diaphragm Spring	5G12
13-160.	Cabin Altitude Controller	5G13
13-161.	Removal of Controller	5G13
13-162.	Installation of Controller	5G15
13-163.	Controller Filter Replacement	5G15
13-164.	Pressurization Controller Cleaning	5G15
13-165.	Testing Cabin Altitude Controller	5G16
13-166.	Electrical Test of the Cabin Altitude Controller	5G16
13-167.	Vacuum Check of the Cabin Altitude Controller	5G17
13-168.	Vacuum Relief Check for Cabin Altitude Controller	5G17
13-169.	Calibration Check for Cabin Altitude Controller	5G17
13-170.	Calibration of Controller	5G18
13-171.	Door Seal System	5G19
13-172.	Description of Door Seal System	5G19
13-173.	Pressurization System (GARRETT)	5H3
13-174.	Description and Principles of Operation	5H3
13-175.	Pressurization Controls	5H3
13-176.	Operating Instructions	5H6
13-177.	Cabin Pressurization Check	5H6
13-178.	Pressurization Check with Test Unit	5H7
13-179.	Pressurization System Checkout Procedure	5H9
13-180.	Ground Check	5H9
13-181.	Flight Operations	5H9
13-182.	Dump Solenoid Valve Function	5H12
13-183.	Isobaric Valve Function	5H12
13-184.	Safety Valve Function	5H12
13-185.	Isobaric and Safety Valves Combined Function	5H12
13-186.	Isobaric and/or Safety Valve Removal	5H12
13-187.	Isobaric and/or Safety Valve Installation	5H12
13-188.	Isobaric and/or Safety Valve Cleaning	5H13
13-189.	Safety Valve Filter Replacement	5H13
13-190.	Cabin Altitude Controller	5H13
13-191.	Removal of Controller	5H13
13-192.	Installation of Controller	5H13
13-193.	Controller Filter Replacement	5H13

SECTION XIII

ENVIRONMENTAL CONTROL SYSTEM
PA-31T & PA-31T1

13-1. INTRODUCTION. This section provides instructions for remedying difficulties which may arise in the operation of the environmental control system. The instructions are organized so that the mechanic can refer to: Principles of Operation, for a basic understanding of the systems; Troubleshooting, for a methodical approach in locating the difficulty; Corrective Maintenance, for the removal, repair and installation of components; and Adjustments and Tests, for the operation of the repaired system.

13-2. DESCRIPTION. The cabin comfort control panel, located at the lower right corner of the instrument panel, contains all the controls needed to operate the heating, cooling, and dehumidification system A master switch on the panel controls the heater, air conditioner and cabin recirculating air blower. A mode switch is normally used in the automatic position and the pilot need only select the proper temperature level with the control marked TEMP. On Serial Nos. PA-31T-8120001 and up and PA-31T-8104001 and up, a selector switch and an aft cabin rheostat is provided. With the switch in the "pilot" position, cabin temperature is controlled by the pilot. In the "cabin" position, control is transferred to the passenger cabin rheostat A manual position of the mode switch is furnished as a standby in case of automatic mode malfunction. The switch marked MANUAL controls the heater or air conditioner when the mode switch is in the manual position. The dehumidity switch provides a means to prevent cabin condensation when the mode switch is in the automatic position. The heater fuel on-off switch controls the heater fuel supply. It must be on for heater operation. A manual reset thermostat has been attached to the outboard side of the hot-air distribution box to prevent overheating of the heated air ducts. If the thermostat should sense a temperature of 300° ± 3° F, electrical power will be interrupted to the heater control valve, thereby, precluding further heater operation until the thermostat is manually reset by opening the right side nose equipment bay and depressing the reset button. If a heater over-temp condition occurs, a thermal switch located on the heater, will trip, precluding further heater operation until the switch is manually reset by opening the access bay and depressing the reset button. Control of the cabin temperature is through cycling of the heater or air conditioner. Both units are regulated by an electronic controller which receives its signal from an adjustable thermostat. When the thermostat calls for heat, the controller turns on the heater system. The heater will operate at full capacity until the desired temperature is obtained at the thermostat. The thermostat has a dead band between the heating and cooling cycles. Under all normal operations, the thermostat (pilot or aft cabin) will control the heater and air conditioner operations. The air conditioning system utilizes an engine mounted belt driven compressor which is driven from a power takeoff on the rear of the right engine. The cabin humidity is controlled by the combined operation of the heater and air conditioner. For dehumidification, the air conditioner operates continuously and the heater cycles to maintain a desired temperature level (above 55° F). An Optional Auxiliary Heater is available as an occasional supplement or as a temporary substitute for the combustion unit. The on off control switch is located in the right side instrument panel and activates the Auxiliary Heater and the recirculating fan. At least four fresh air vents must be open when operating the system (see P.O.H. for other restrictions).

13-3. TROUBLESHOOTING. Troubles pertaining to the environmental control system are listed in Table XIII-IV at the end of this section, along with their probable causes and suggested remedies.

13-4. JANITROL HEATERS. This part of Section XIII contains information for operation, service, and overhaul of the combustion heater and combustion air blower used on the PA-31T and PA-31T1 Due to update in heater and blower manufacturing, there are a few differences in the service procedures. Most of the service information is basic for all units. Areas which differ have been clarified by the inclusion of assembly part numbers in the particular subject headings or material. Reference to the Parts Catalog will establish aircraft serial numbers required

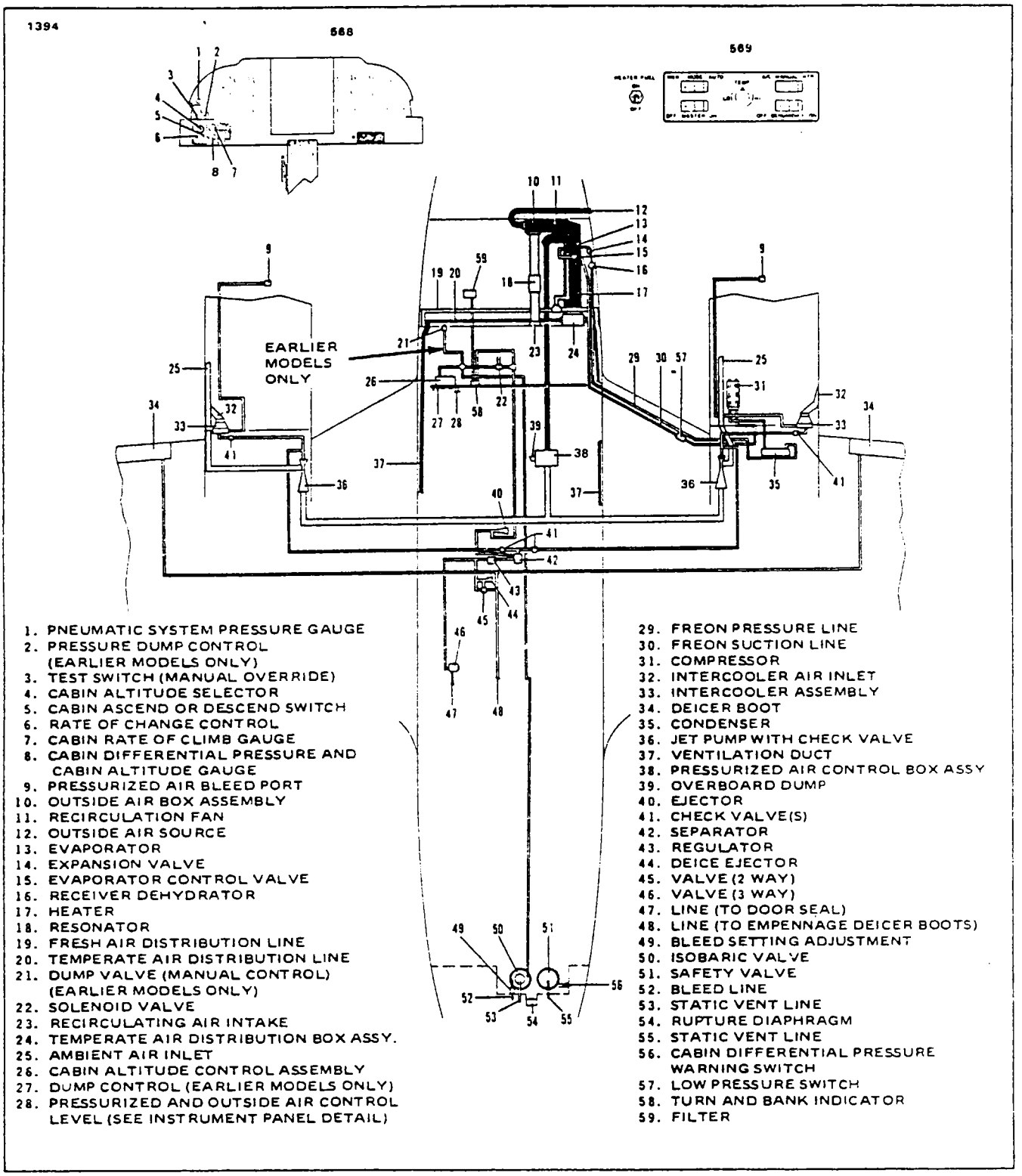

Figure 13-1. Heating System Flow Diagram

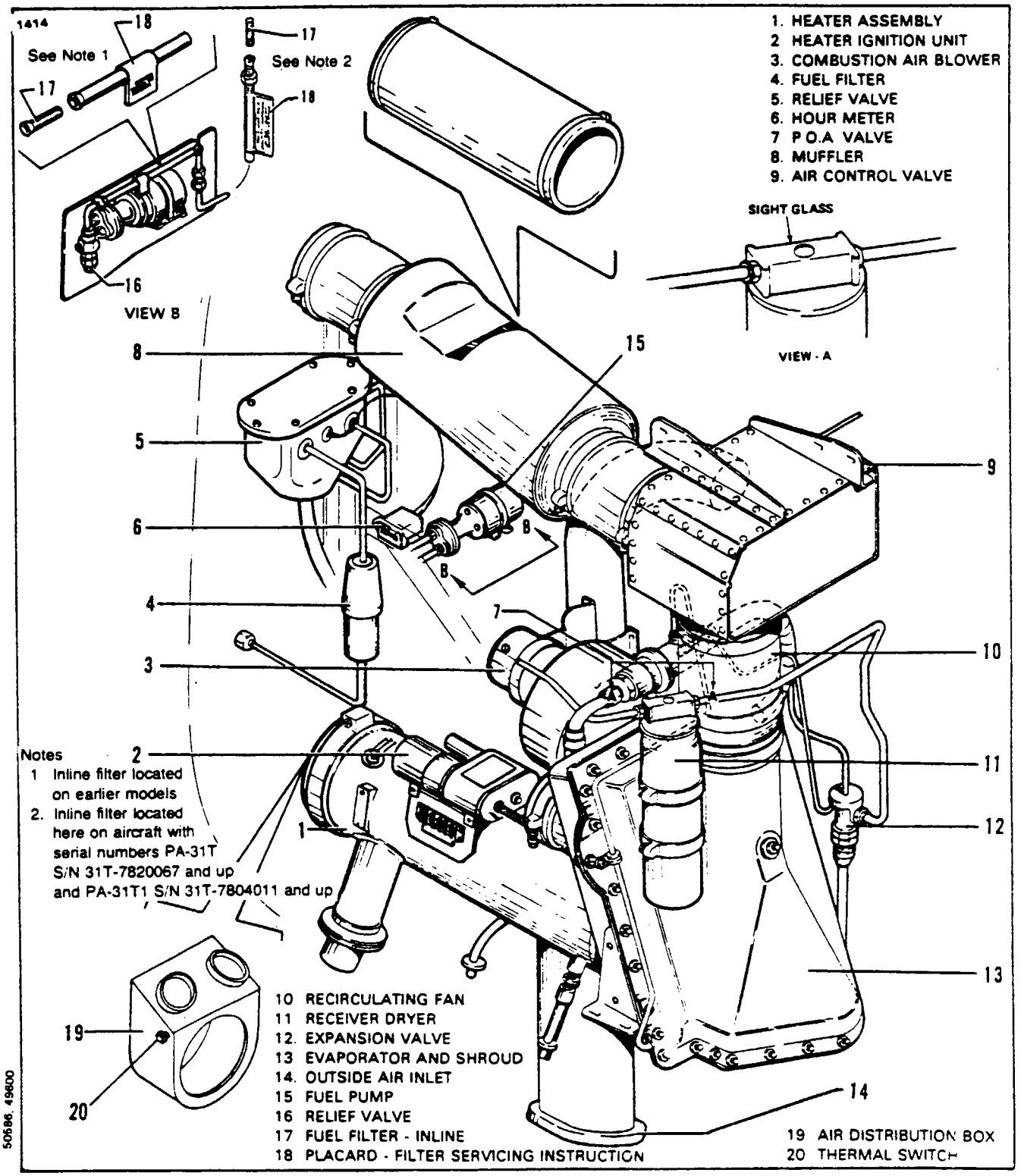

Figure 13-2. Environmental Components

13-5. CABIN HEATER SYSTEM DESCRIPTION. The flow of primary air for heating, ventilating, and defrosting is taken through the main pressurization air line or from an outside air duct in the lower right side of the nose section. During cabin pressurization, the ram air duct is closed, and primary air is taken from the engine sources together with secondary air taken from the cabin by means of a recirculation blower and is delivered to the cabin air conditioning and heater system. Air from the heater is directed to outlets along both sides of the cabin and also is routed to the windshield defroster outlets along both sides of the windshield center post. Air for ventilating is routed through ducts along both sides of the cabin and exits out of individually controlled eyeball outlets next to each passenger seats and in front of the pilot and copilot. The recirculation blower operates whenever the cabin comfort control master switch is on. All controls for the heater are mounted on the lower right instrument panel.

13-6. HEATER OPERATION. The combustion heater is controlled by an electronic controller located on the lower right instrument panel. A master switch turns the system ON or OFF. To the left of the controller is the heater fuel switch. The controller has a mode switch for operating the heater in an automatic or manual selection. A temperature control is used to select the desired temperature through the use of a controllable mercury bulb thermostat. The system is normally operated in the AUTO mode position and when the thermostat calls for heat, the controller turns the heater on. The heater operates at maximum efficiency until the desired temperature is obtained.

13-7. DESCRIPTION OF HEATER COMPONENTS.

13-8. SPARK-SPRAY IGNITION. (Refer to Figure 13-3.) The controlled atomized spray from a specially designed spray nozzle, coupled with a high voltage spark plug ignition system and a regulated combustion air intake provide the conditions required for heater operation.

Heat is produced by burning a fuel-air mixture in the combustion chamber of the heater. Fuel is injected into the combustion chamber through the spray nozzle The resulting cone shaped fuel spray mixes with combustion air and is ignited by a spark from the spark plug. Electric current for ignition is supplied by an ignition unit which converts 24-volts DC to high voltage oscillating current to provide a continuous spark across the spark plug gap. A shielded, high voltage lead connects the ignition unit to the spark plug. Combustion air enters the combustion chamber, tangent to its surface and imparts a whirling or spinning action to the air This produces a whirling flame that is stable and sustains combustion. Ignition is continuous and the combustion process is self-piloting. The burning gases travel the length of the inner combustion chamber; then double back along the inside wall of the heat exchanger to the three crossovers, through which they pass into the outer heat exchanger compartment. After traveling the length of the heat exchanger, they then pass out the exhaust outlet.

Ventilating, pressurized, or dehumidified air passes through the heater between the jacket and the outer surface of the combustion tube, and through a passage between the outer and inner portions of the combustion chamber. In this manner, the air comes in contact with the heated cylinder surfaces.

13-9. COMBUSTION AIR BLOWER. This centrifugal type blower supplies combustion air to the combustion chamber of the heater. Performance of the combustion air blower is assisted by the use of ram air during flight.

Combustion air blowers (10E58-1, 10E58-2, 16E68-1 and 16E68-2 only) contain an internal heating coil to preheat the combustion air to assure complete fuel atomization when operating in cold surroundings. The heating coil is controlled by a temperature switch set to turn the heating element on when combustion air blower temperature reaches 0° F and then to turn it off when the temperature reaches +60° F.

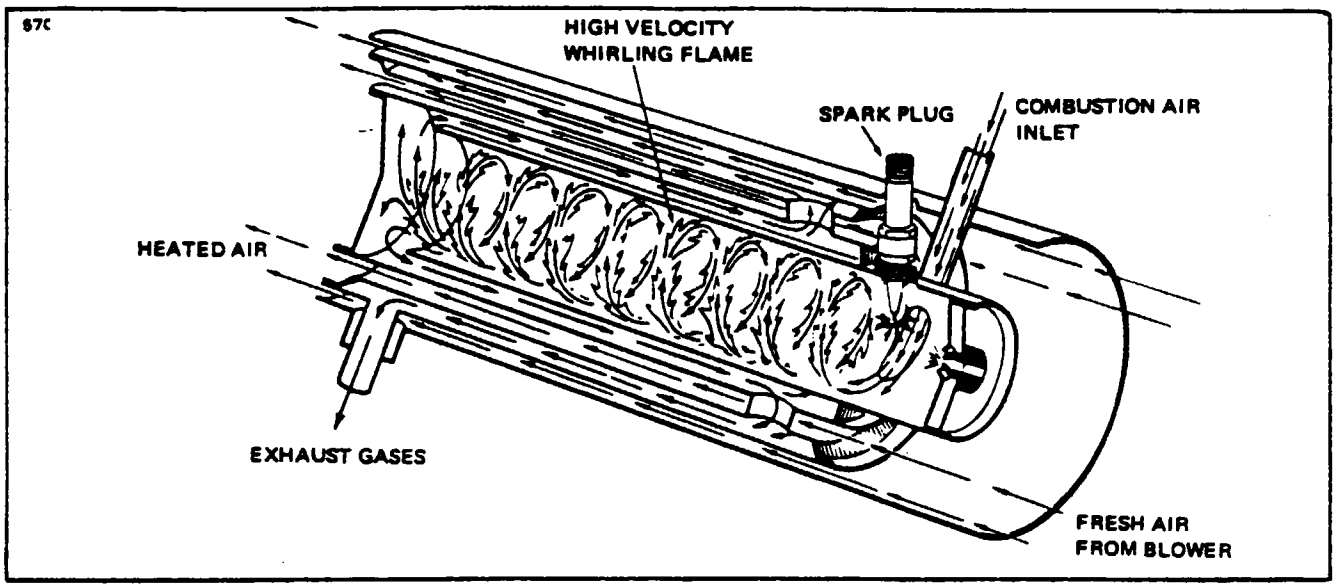

Figure 13-3. Cutaway of Heater, Showing Whirling Flame (Typical)

13-10. FUEL PUMP AND HEATER FUEL FILTER. The fuel pump is an electrically operated 28 VDC unit with a capacity of 3 GPH at 100 psi. The heater fuel filter on aircraft model PA-31T with serial numbers 31T-7400002 to 31T-7720069 inclusive, is located under the copilot seat, below an access panel on the floor Aircraft model PA-31T with serial numbers 31T-7820001 and up, and model PA-31T1 with serial numbers 31T1-7804001 and up, the filter is located in the right, forward fuselage at station 81. The filter should be replaced after approximately 500 hours of heater operation and inspected each 100 hours The heater operation hours are recorded on an hour meter, located in the forward fuselage at station 81

13-11. HEATER LIMIT SWITCH. Located on the heater is an overheat or limit switch. This acts as a safety device to render the heater system inoperative if a malfunction should occur causing excessively high temperatures (225°+ -5°F, minimum opening). This switch is located on the downstream end of the vent jacket and is reached through the access panel on the right side of the nose section. On various models the reset switch is located on the instrument panel adjacent to the heater controls. (Refer to Parts Catalog for part numbers, serial numbers and kit number).

13-11a. HEATER THERMOSTAT. (Refer to Parts Catalog for part numbers, serial numbers.) If kit numbers 764 227 and 764 228 are installed, a manual reset thermostat has been attached to the outboard side of the hot air distribution box to prevent overheating of the heated air ducts. If the thermostat should sense a temperature of 300°+ -3°F, electrical power will be interrupted to the heater control valve, thereby, precluding further heater operation until the thermostat is manually reset by removing the access panel on the right side of the nose section and depressing the reset button.

13-12. HEATER CYCLING SWITCH. The cycling switch located on the upper surface of the left cabin heat duct, just opposite the left rudder pedal, operates to control the duct temperature. This switch will turn the heater fuel off when the duct temperature reaches 196° ± 3°F and back on at 188° ± 5°F. This switch cycles the heater on and off to maintain the set temperature and is adjustable. (See Figure 13-4.) Preset at the factory so no further adjustment should be required.

13-13. COMBUSTION AIR PRESSURE SWITCH. This is a differential pressure switch which shuts off the heater operation whenever a positive combustion air pressure of .5" of water is reached.

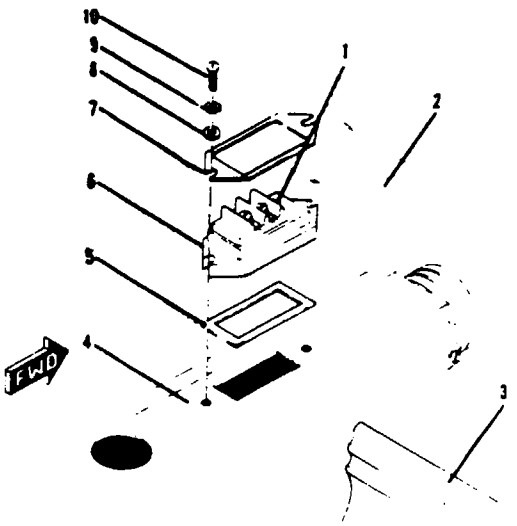

Figure 13-4 Heater Cycling Switch

13-14 INSPECTION OF HEATER AND HEATER COMPONENTS

a Inspect all fuel lines and fittings for fuel stains, indicating leakage, and replace lines or tighten fittings as necessary

b. Check heater for loose bolts, screws and wiring

c Inspect all electrical connections for corrosion If corrosion is evident, clean affected components and wipe clean with a lightly oiled cloth.

d Inspection of the heater combustion chamber is limited because the outer jacket is not removable Minor cracks or pinholes will be detected in the leakage test outlined in Paragraph 13-71

13-15 DAILY INSPECTION.

a. Inspect the ventilating air inlet scoop, combustion air inlet scoop, exhaust outlet and fuel drain for possible obstructions Make sure that all of these openings are clear of any restrictions and that no damage has occurred to air scoop protrusions

b Look in the area of the combustion heater exhaust tube for large or unusual accumulations of soot on the aircraft skin. Soot accumulations indicate that the heater is operating at a "fuel rich" condition A "fuel rich" condition may be caused by incorrect fuel pressure to the heater, restriction in the combustion air inlet line, loss of performance by the combustion air blower, or partially clogged fuel nozzle

c Perform an operational check as follows:

1. Place the HEATER SWITCH in the ON (or HEAT) position The ventilating air blower and combustion air blower should operate and the heater OVER TEMP light should illuminate

2 Operate both the combustion air blower and ventilating air blower and check each for unusual current draw, noise or vibrations

13-16. 100-HOUR INSPECTION. The mandatory 100 Heater Operating Hour Inspection shall be conducted on new heaters or overhauled heaters with a new combustion tube assembly upon the accumulation of 500-heater hours or twenty-four months, whichever occurs first, and thereafter at intervals not to exceed 100-heater hours or twenty-four months, whichever occurs first. If an hourmeter is used on the heater assembly, it should be connected across terminals number 2 and 5 on the heater terminal strip. If an hourmeter is not used, count one heater hour for each two flight hours for normal aircraft operation. Consideration should be given for any excessive ground operation of the heating system.

NOTE

The 100-Hour Inspection consists of the functional checks and inspections listed below and the Pressure Decay Test.

a. Inspect ventilating air and combustion air inlets and exhaust outlet for restrictions and security at the airplane skin line.

b. Inspect the drain line to make sure it is free of obstructions. Run a wire through it if necessary to clear an obstruction

c. Check all fuel lines for security at joints and shrouds, making sure that no evidence of leaks exists. Also check for security of attachment of fuel lines at the various attaching points in the airplane.

d. Inspect electrical wiring at the heater terminal block and components for loose connections, possible chafing of insulation, and security of attachment points.

e. Inspect the high-voltage cable connection at the spark plug to make sure it is tight Also, examine the cable sheath for any possible indications of arcing, which would be evidenced by burning or discoloration of the sheath.

f. Inspect the combustion air blower assembly for security of mounting and security of connecting tubing and wiring. Tighten any loose electrical terminals and air tube connections.

g. Operate both the combustion air blower and ventilating air blower and check for unusual noise or vibrations.

h. It is recommended that the condition of the spark plug be checked for operation as described in paragraph titled "Spark Plug."

i. Evaluate the condition of the combustion chamber by performing a "Pressure Decay Test" as described in the latest revision of Janitrol Maintenance and Overhaul Manual P/N 24E25-1 or Kit 764 963 Janitrol Heater Pressure Check.

NOTE

Janitrol Maintenance and Overhaul Manual P/N 24E25-1 can be obtained from the Midland-Ross Corp., Janitrol Aero Div., 4200 Surface Road, Columbus, Ohio 43228. (Phone: 614-276-3561.)

j. Following the 100-hour inspection, perform the "Preflight and/or Daily Inspection" as described.

13-17. MAINTENANCE SERVICE. Instructions contained in the following paragraphs consists of removal and installation of the heater assembly from the airplane.

13-18. REMOVAL OF HEATER

a. Ascertain that the heater switches are off.
b. Remove the access panel located on the right side of the airplane's nose section.
c. Remove the air conditioning duct which extends over the heater from the evaporator shroud
d. Disconnect the wires from the harness to the heater terminal strip.

NOTE

For ease of installation, the wires should be marked before removal.

e. Disconnect the combustion air blower intake and exit tubes and electrical leads Then remove the blower assembly from its mounting bracket

f. Remove the shroud cover at the fuel line fitting at the heater and disconnect the fuel and drain lines. Also, disconnect the electrical lead from the terminal on the heater which goes to the solenoid valve assembly.

g. Disconnect the fuel drain fitting below the heater and let it rest against the skin.

h Disconnect and remove the two air ducts from the air distribution box assembly.

i. Loosen and remove the two V-bands clamps which secure the heater to the air distribution and evaporator shroud. Remove the sealing tape from around the heater joints.

j Loosen the four screws which hold the evaporator shroud in place and move the shroud forward, as far as it will go, to obtain added clearance for heater removal.

k Remove the heater assembly from the airplane by raising the aft end of the heater to clear the air distribution box assembly; then moving the heater aft to clear the evaporator shroud.

THIS SPACE INTENTIONALLY LEFT BLANK

13-19. INSTALLATION OF HEATER.

a. Install the forward end of the heater below the outlet on the evaporator shroud and move it forward until the aft end of the heater clears the air distribution box.

b. Align the heater exhaust tail pipe into the hole in the fuselage skin.

c. Move the evaporator shroud aft until it butts against the heater; wrap one overlapped turn of pressure sensitive tape #69EGS (3M) around the joints before installing V-band clamps; then install the V-band clamps at the ends of the heater.

NOTE

Do not tighten the clamps at this time, as it may be necessary to move the heater or evaporator assembly to make other hookups.

d. Install the four screws which hold the evaporator shroud in place and secure the shroud.

e. Connect the fuel drain fitting below the heater.

f. Connect the fuel line and fuel shroud drain line at the heater and install the fuel shroud cover.

g. The V-band clamps can be tightened at this time.

h. Mount the combustion air blower to the intake and exit air tubes and secure the connections at the tubes. Now secure the blower to the mounting bracket.

i. Connect the electrical lead to the solenoid valve terminal on the heater jacket.

j. Connect the rest of the electrical leads to the heater terminal strip.

NOTE

A wiring schematic of the heater hookup may be found in the Electrical System, Section XV.

k. Install and secure the two air ducts from the air distribution box assembly.

l. Install and secure the air conditioning duct extending over the heater from the evaporator shroud.

m. Make a complete inspection of the system installation; then install the access panel and secure it.

13-20. HEATER ELECTRICAL SYSTEM CHECKS.

13-21. ELECTRICAL CONTINUITY CHECK. These tests are listed as an aid in isolating open-circuited or inoperative components. (Refer to Section XV for wiring schematics.)

NOTE

The schematic wiring diagrams in Section XV shows, in addition to the heater circuitry, the airplane environmental control circuit. For the pruposes of this manual, the circuitry shown in these illustrations will be utilized to describe electrical continuity checks.

It must be assumed that power, which is furnished through the cabin comfort circuit breaker, is present at the "MASTER" switch at all times. Always check the circuit breaker before performing electrical continuity checks.

a. To operate the "RECIRCULATING FAN," turn the cabin comfort controller "MASTER" switch "ON." The fan will operate as long as the switch is "ON."

b. To operate the heater, set up the cabin comfort controller as follows:

1. Position the "SELECTOR" switch in the "HEAT" position.
2. Position the "MODE" switch in the "MANUAL" position.
3. Position the "HEATER FUEL" switch "ON."
4. Turn the "MASTER" switch "ON" and check at combustion air outlet for ignition.

c. To check the "TEMP" control, reset the controller as follows:

1. Operate the heater as outlined in Step b, and reset the "MODE" switch to "AUTO" position.

2. Rotate the "TEMP" control to the "HI" position and check for heater ignition after 10 second delay.

NOTE

With the controller set up in this configuration, the "SELECTOR" switch is cut out of the circuit, and the heater will operate only if the "TEMP" control is set high enough to call for heat. The outside air temperature must be below 80°F or the cabin thermostat must be artificially cooled.

3. Rotate the "TEMP" control to the "LO" position. The heater should shut off.

13-22. RECIRCULATING FAN POWER CIRCUIT CHECK. With the cabin comfort controller "MASTER" switch in the "ON" position, electrical continuity (24-volts nominal) should be present at the recirculating fan motor.

13-23. HEATER POWER CIRCUIT CHECK. With the cabin comfort controller "MASTER" switch in the "ON" position, the "SELECTOR" switch in the "HEAT" position and the "MODE" switch in the "MAN" position, electrical continuity should be present at the following locations:

NOTE

The recirculating fan will operate as long as the master switch is on.

a. Terminal No. 1 of the heater terminal strip to ground.

b. Terminal No. 1 of heater terminal strip through the radio noise filter to the combustion air blower motor to terminal No. 5 of the heater terminal strip.

c. From terminal No. 1 of the heater terminal strip to the overheat switch through the combustion air pressure switch to terminal No. 2 of the heater terminal strip.

d. From terminal No. 2 of the heater terminal strip to the ignition unit.

e. From terminal No. 3 of the heater terminal strip through the cycling switch to the fuel solenoid valve.

In the event that electrical continuity is not present at one or more of the above listed points, the wiring must be tracked back to the power source. If components are still inoperative after the wiring inspection, check the individual inoperative components for continuity and, if necessary, replace them.

13-24. MAINTENANCE AND REPAIRS. Instructions in this paragraph pertain to maintenance of the basic heater and components. Instructions for removal of components are included, provided the installation permits accessibility.

NOTE

No special tools are required for normal periodic maintenance.

13-25. COMBUSTION AIR BLOWER.

a. Removal:

1. Disconnect wire at quick-disconnect terminal.
2. Disconnect the inlet tubing from the inlet air adapter.
3. Loosen the clamps that hold the combustion air blower assembly in the support bracket and slide the motor out of the bracket.

b. Installation:

1. Prior to installing the combustion air blower, inspect all parts of the assembly for loose screws, loose nuts, and poor ground connection on the blower housing. Make sure the blower wheel is tight on the shaft and properly located in the housing. It should have just enough clearance to rotate at full speed without binding against the outer portion of the housing. Blower performance is based upon this close-tolerance clearance. It is recommended that correct voltage be applied for this clearance check.
2. Install the blower inlet adapter in the same orientation as before removal.
3. Place the combustion air blower assembly in position in the attaching clamp so the air tubing can be connected and slide the tubing into position at the point where it was disconnected during removal. Tighten the motor in the attaching strap.
4. Secure the air tubing by installing the bolt and locknut removed during disassembly
5. Connect the wire lead to No. 1 terminal on terminal strip.
6. Check motor operation by setting the selector switch to the heat position, the mode switch to the manual position and leaving the heater fuel switch in the off position. Now turn on the comfort control master switch.

NOTE

It may be desirable to disconnect the lead wire to the recirculating fan, as it will also operate whenever the cabin comfort master switch is in the ON position.

13-26. DISASSEMBLY OF COMBUSTION AIR BLOWER ASSEMBLY (57D77). (See Figure 13-5)

a. Remove the combustion air blower inlet adapter (2) by removing three screws, lock washers, cover plate and gasket.

b. Remove the outlet adapter (5) by removing the two screws (18) and lock washers (17).

c. Remove the inlet flange (6) by removing the three screws (18) and lock washers (17).

d. Remove screws (18) and lock washers (17); then separate the back plate (11), with motor (13) attached, from the blower housing (8) and free the motor leads and capacitor (7) from the back plate (11).

e. Loosen the set screw in the blower wheel (10) and slide it off the motor shaft.

f. Remove the two hex nuts (23), lock washers (24) and flat washers (25) and slide the back plate (11) off the motor through bolts. The spacer (12) will drop out.

g. Install new motor brushes as described in Paragraph 13-33. If the motor commutator is badly worn, or if the motor is defective in any respect, it must be replaced.

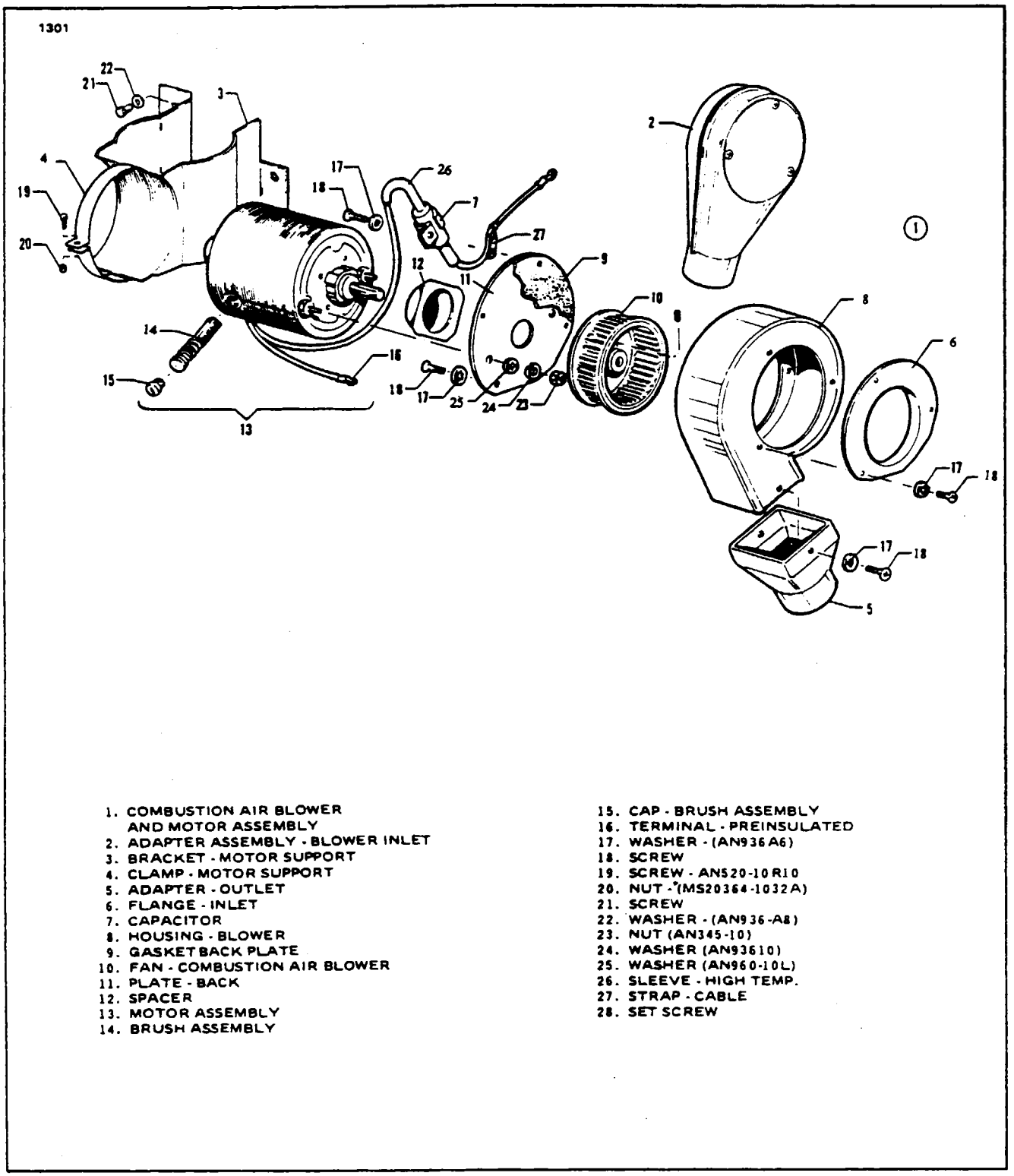

1. COMBUSTION AIR BLOWER AND MOTOR ASSEMBLY
2. ADAPTER ASSEMBLY - BLOWER INLET
3. BRACKET - MOTOR SUPPORT
4. CLAMP - MOTOR SUPPORT
5. ADAPTER - OUTLET
6. FLANGE - INLET
7. CAPACITOR
8. HOUSING - BLOWER
9. GASKET BACK PLATE
10. FAN - COMBUSTION AIR BLOWER
11. PLATE - BACK
12. SPACER
13. MOTOR ASSEMBLY
14. BRUSH ASSEMBLY
15. CAP - BRUSH ASSEMBLY
16. TERMINAL - PREINSULATED
17. WASHER - (AN936A6)
18. SCREW
19. SCREW - AN520-10R10
20. NUT - (MS20364-1032A)
21. SCREW
22. WASHER - (AN936-A8)
23. NUT (AN345-10)
24. WASHER (AN936 10)
25. WASHER (AN960-10L)
26. SLEEVE - HIGH TEMP.
27. STRAP - CABLE
28. SET SCREW

Figure 13-5. Combustion Air Blower and Motor Assembly (57D77)

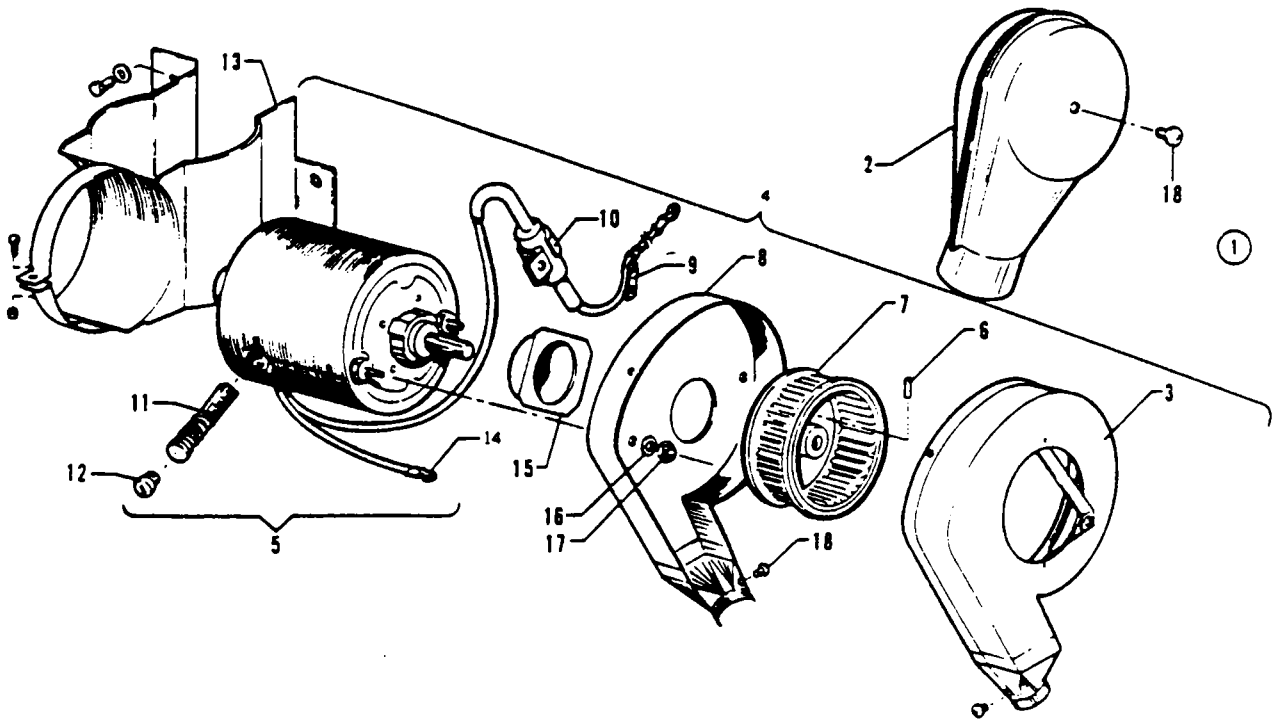

1 COMBUSTION AIR BLOWER AND MOTOR ASSEMBLY
2 ADAPTER ASSEMBLY - BLOWER INLET
3 HOUSING - BLOWER OUTER HALF
4 COMBUSTION AIR BLOWER AND MOTOR
5 MOTOR ASSEMBLY - COMBUSTION AIR BLOWER
6 SET SCREW - BLOWER FAN
7 FAN - COMBUSTION AIR BLOWER
8 HOUSING - BLOWER INNER HALF
9 STRAP - CABLE
10 CAPACITOR
11 BRUSH ASSEMBLY
12 CAP - BRUSH ASSEMBLY
13 MOUNT - COMBUSTION AIR BLOWER SUPPORT
14 TERMINAL - PREINSULATED
15 SPACER
16 WASHER
17 LOCK NUT - AN345-10
18 SCREWS

Figure 13-6 Combustion Air Blower and Motor Assembly (89D23-1)

13-27. REASSEMBLY OF COMBUSTION AIR BLOWER ASSEMBLY (57D77). (Refer to Figure 13-5.)

a. Place the spacer (12) over the end of the motor shaft and attach the motor assembly (13) to the back plate (11) with the two self-locking nuts (23), flat washers (25) and lock washers (24).

b. Slide the blower wheel (10) on the motor shaft and tighten the set screw lightly against the flat portion of the motor shaft.

c. Place the blower housing (8) in position on the back plate (11) and install screws (18) and lock washers (17).

d. Attach the capacitor (7) at the point shown with the screw (18) and lock washer (17). The motor ground lead terminal (16) can be grounded to the motor support bracket (3).

e. Attach the inlet flange (6) and blower inlet adapter (2) to blower housing (8) with three screws (18) and lock washers (17).

f. Loosen the Allen set screw in the blower wheel (10) and shift the wheel on the motor shaft until it is near the inlet in the blower housing. Tighten the set screw securely. The blower wheel should just clear the inlet flange when rotated at full RPM. Spin the blower wheel by hand for clearance check; then apply proper voltage to run motor and recheck for proper clearance.

g. Slide the blower outlet adapter (5) on the blower housing outlet (8) and install the two screws (18) and lock washers (17).

13-28. DISASSEMBLY OF COMBUSTION AIR BLOWER ASSEMBLY (89D23-1). (See Figure 13-6.)

a. Remove the combustion air blower inlet adapter (2) by removing one screw.

b. Remove the housing outer half by removing the four screws.

c. Loosen the set screw in the blower wheel (7) and slide it off the motor shaft.

d. Remove the two hex nuts (17), lock washers (16) and flat washers and slide the housing inner half off the motor through bolts. The spacer (15) will drop out.

e. Install new motor brushes as described in Paragraph 13-33. If the motor commutator is badly worn, or if the motor is defective in any respect, it must be replaced.

13-29. REASSEMBLY OF COMBUSTION AIR BLOWER ASSEMBLY (89D23-1). (Refer to Figure 13-6.)

a. Place the spacer (15) over the end of the motor shaft and attach the motor assembly (5) to the housing inner half with the two self-locking nuts (17), flat washers and lock washers (16).

b. Slide the blower wheel (7) on the motor shaft and tighten the set screw lightly against the flat portion of the motor shaft.

c. Place the blower housing outer half in position on the housing inner half and install screws (18).

d. Attach the capacitor (10) at the point shown with screw. The motor ground lead terminal (14) can be grounded to the motor support bracket (13).

e. Loosen the Allen set screw in the blower wheel (7) and shift the wheel on the motor shaft until it is near the inlet in the blower housing. Tighten the set screw securely. The blower wheel should just clear the inlet flange when rotated at full RPM. Spin the blower wheel by hand for clearance check; then apply proper voltage to run motor and recheck for proper clearance.

13-30. DISASSEMBLY OF COMBUSTION AIR BLOWER ASSEMBLY. (10E58-1, 10E58-2, 16E68-1 and 16E68-2) (Refer to Figure 13-7.)

a. Disconnect the electrical wiring that supplies the heater assembly (13) at the quick disconnect and from the relay (11).

b. Remove the combustion air blower inlet adapter (7).

c. Remove the elbow (15) from the combustion air blower outlet to regulator.

d. Remove the housing outer half (5) by removing attaching hardware.

e. Loosen the set screw in the blower wheel (8) and slide it off the motor shaft.

f. Remove the capacitor (20), combustion air switch (12) and the relay (11) from the housing inner half (6).

g. Remove the hardware that attaches the motor (2) to the housing inner half (6). The spacer (9) will drop out.

h. Install new motor brushes, if applicable, as described in Paragraph 13-33. If the motor commutator is badly worn, or if the motor is defective in any respect, it must be replaced.

13-31. REASSEMBLY OF COMBUSTION AIR BLOWER ASSEMBLY. (10E58-1, 10E58-2, 16E68-1 and 16E68-2) (Refer to Figure 13-7.)

a. Place the spacer (9) over the end of the motor shaft and attach the motor assembly (2) to the housing inner half (6) with attachment hardware.

b. Attach the capacitor (20), combustion air switch (12) and the relay (11) to the housing inner half (6).

c. Slide the blower wheel (8) on the motor shaft and tighten the set screw lightly against the flat portion of the motor shaft.

d Place the blower housing outer half (5) in position on the housing inner half (6) and install hardware removed.

e. Place the elbow (15) to the combustion air blower outlet in position and install hardware removed

f. Place the combustion air blower inlet adapter (7) with gasket (19) in position and install hardware removed.

g. Connect the wiring at the quick disconnect and at the relay (11) that supplies the heater assembly (13).

13-32. CLEANING OF COMBUSTION AIR BLOWER.

a. Clean individual metal parts (except the combustion tube and jacket assembly, and those parts which contain switches or electrical wiring) by immersing them in dry solvent such as Stoddard Solvent (Federal Specification P-D-680). Use a bristle brush to assist the cleaning process if foreign accumulations are stubborn to remove.

b. Allow the parts to air dry. If speed is necessary, the parts may be dried with compressed air or a lintless cloth.

c. Wipe electrical components with a clean, dry cloth. If foreign material is difficult to remove, moisten the cloth in carbon tetrachloride or electrical contact cleaner and clean all exterior surfaces of the parts thoroughly.

d. Dust, etc., should be removed from switches by wiping or blowing it off.

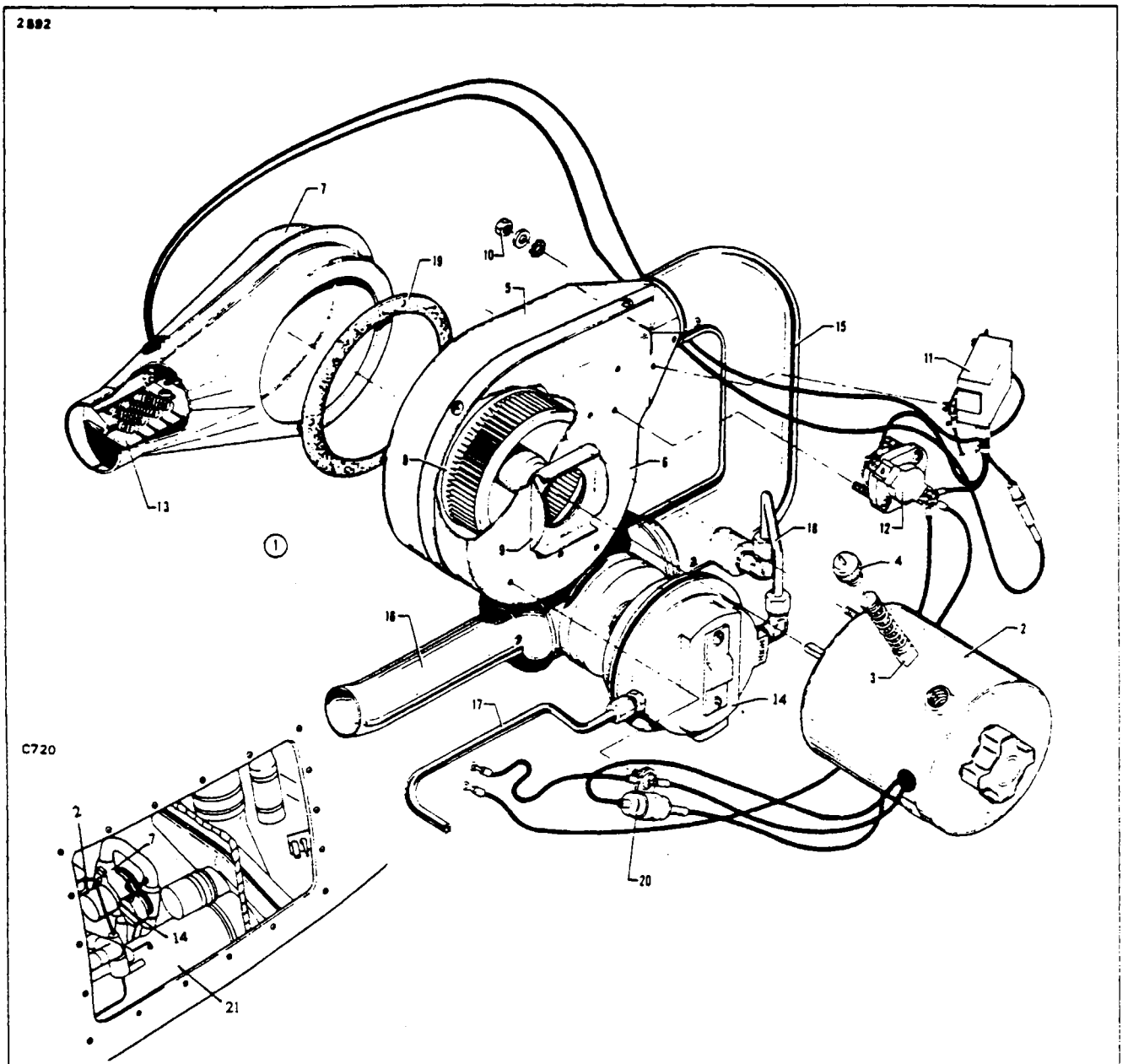

1 COMBUSTION AIR BLOWER AND REGULATOR ASSEMBLY
2 MOTOR ASSEMBLY - COMBUSTION AIR BLOWER
3 BRUSH ASSEMBLY - (10E58-1 AND 10E58-2 ONLY)
4 CAP - BRUSH ASSEMBLY (10E58-1 AND 10E58-2 ONLY)
5 HOUSING - BLOWER OUTER HALF
6 HOUSING - BLOWER INNER HALF
7 ADAPTER ASSEMBLY - BLOWER INLET
8 FAN - COMBUSTION AIR BLOWER
9 SPACER (10E58-1 AND 10E58-2 ONLY)
10 NUT AND WASHERS (10E58-1 AND 10E58-2 ONLY)
11 RELAY
12 SWITCH - COMBUSTION AIR TEMPERATURE
13 PREHEATER ASSEMBLY - COMBUSTION AIR
14 REGULATOR - COMBUSTION AIR
15 ELBOW - COMBUSTION AIR BLOWER TO REGULATOR
16 ELBOW - REGULATOR TO HEATER
17 TUBE REGULATOR
18 TUBE REGULATOR
19 GASKET - BLOWER HOUSING
20 CAPACITOR (10E58-1 AND 10E58-2 ONLY)
21 HEATER ASSEMBLY

Figure 13-7 Combustion Air Blower and Motor Assembly (10E58-1, 10E58-2, 16E68-1 and 16E68-2)

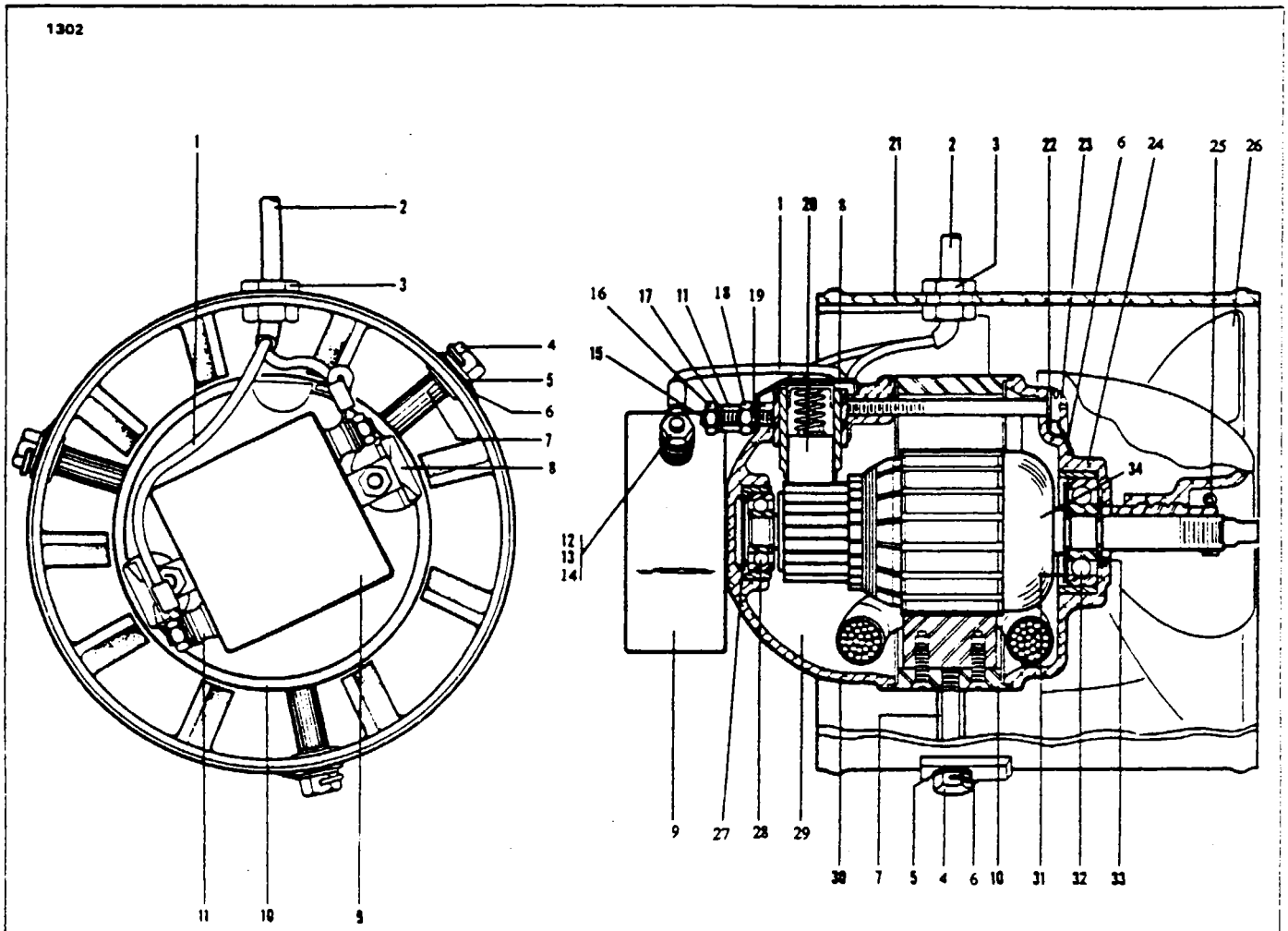

1. ELECTRICAL LEAD
2. SLEEVE (INSULATING)
3. GROMMET
4. BOLTS
5. WASHERS
6. SAFETY WIRE
7. SPACERS
8. CAP
9. NOISE FILTER RADIO
10. STATOR
11. SLEEVE (SPACER)
12. NUT
13. LOCK WASHER
14. PLAIN WASHER
15. TERMINAL LUG
16. NUT
17. WASHER
18. NUT
19. WASHER
20. BRUSHES
21. FAN HOUSING
22. WASHERS FLAT
23. MACHINE SCREWS
24. END BELL
25. COTTER PIN
26. PROPELLER
27. FLAT SPRING
28. BEARING
29. MOTOR ASSEMBLY
30. END BELL
31. BEARING SHIELD
32. BEARING
33. SLINGER
34. ARMATURE

Figure 13-8. Recirculation Fan and Motor Assembly (Dynamic Air)

13-33. INSPECTION AND REPAIR OF COMBUSTION AIR BLOWER. Remove the brush cap at one of the brush locations. Note position of brush inside the guide and carefully lift the brush and brush spring out of the guide. Be sure to hold the brush so that it can be reinstalled in precisely the same position if no brush replacement is required.

Inspect the brush for wear. A new brush is .531 inch long. If brushes are worn to a length of .187 inch, they must be replaced.

Looking through the brush guide, inspect the commutator, which should be smooth and medium brown to dark brown in color. Remove all dust from commutator with compressed air. If the commutator is grooved in the brush track, gouged, scored, or shows signs of having burned spots, replace the complete motor assembly. If the commutator is in good condition, install new motor brushes and tighten brush caps into place. Make sure each brush is oriented so that the curved end fits the curvature of the commutator.

After installing new brushes, it is advisable to run in the brushes as follows: Connect the motor to a controlled voltage supply (rheostat in a 24-volt line). Operate the motor at approximately 1/2 its normal speed for the first hour; then gradually increase the speed until it is rotating at approximately normal speed. Continue the run-in operation for at least two hours to properly seat the brushes before installing the blower in the airplane.

13-33a. PREHEATER ASSEMBLY.

13-33b. REMOVAL AND INSTALLATION OF THE COMBUSTION AIR PREHEATER ASSEMBLY

a. With the combustion air blower removed from the aircraft, separate the blower inlet adapter assembly by removing the screw securing it to its position.

b. Remove the screws securing the preheater to the blower inlet adapter assembly.

c. Lift preheater out of blower inlet adapter assembly, pulling the wire leads in through the grommet

d. Install in reverse order of removal.

13-34. RECIRCULATING FAN (Dynamic Air). (Refer to Figure 13-8.)

a. Removal:

1. Remove the access panel on the right side of the nose section.

2. Loosen and remove the four clamps securing the fan to the flexible rubber cuffs and the air control box and evaporator shroud.

3. Disconnect the electrical leads to the fan motor.

4. Slide the lower cuff down onto the evaporator shroud until the end of the fan housing is exposed; then remove lower cuff.

5. Move the fan down to disconnect the upper cuff from the air control box and remove.

6. Rotate the fan's upper end out towards the access opening and remove the fan from the airplane.

b. Installation:

1. If the cuffs were removed when taking the fan out of the airplane, replace them onto the air control box and evaporator shroud.

2. Install the fan into the space between the air control box and evaporator shroud with the motor end of the fan extending into the shroud.

3. Turn the fan upright between the airbox and shroud and slide the upper edge of the fan housing into the cuff on the airbox.

4. Secure the fan, cuff, and air control box together with two clamps.

5. Slide the lower cuff over the lower end of the fan and secure it to the shroud and fan housing with the two other clamps.

NOTE

Ascertain that the fan does not come in contact with any part of the air control box or evaporator shroud. The cuffs act to shock mount the fan.

6. Connect the electrical leads to the fan and replace the access panel on the nose section.

13-35. DISASSEMBLY OF RECIRCULATING FAN (Dynamic Air). (Refer to Figure 13-8.)

a. Remove the cotter pin (25) from the shaft end of the motor armature (34) and remove the propeller (26) by unscrewing it from the shaft end.

b. Remove the plastic grommet (3) and insulating sleeve (2) from the electrical leads extending out from the fan housing (21).

c. Cut the safety wire and remove the three bolts (4) and washer (5) which secure the motor assembly (29) in the fan housing (21) along with the spacers (7).

d. Disconnect the electrical lead (1) from the radio filter (9) by removing the nut (12), lock washer (13) and plain washer (14).

e. Disconnect and remove the nut (16) and washer (17) from the terminal lug (15) and remove the radio noise filter (9) and the sleeve spacer (11).

f. Remove the nut (18) and washer (19) on the terminal lug (15) and remove the cap (8) from over the brush holders.

g. Remove the brushes (20) from the motor assembly (29).

h. Cut the safety wire and remove the machine screws (23) and flat washers (22) from the motor assembly (29).

NOTE

Make some type of reference marks along both bell ends and stator to facilitate reassembly.

i. Remove the end bell (24) being careful not to drop the bearing (32), slinger (33) and bearing shield (31).

j. Remove the end bell (30) also being careful not to drop the bearing (28) and flat spring (27) behind the bearing.

k. Remove the motor armature (34) from the stator (10).

l. Remove the bearings (28 and 32) from their respective end bells along with the related parts. (Refer to Figure 13-8.)

13-36. ASSEMBLY OF RECIRCULATING FAN (Dynamic Air). (Refer to Figure 13-8.)

a. Install the flat spring (27) into the end bell (30) with the tabs toward the bearing; then install the bearing (28).

b. Install the slinger (33) into the end bell (24); then install the bearing (32) and bearing shield (31) with the tapered center hole towards the bearing.

c. Install the motor armature (34) into the stator (10) and position the end bell (30) to the stator, aligning the reference marks made before disassembly.

d. Install the forward end bell (24) onto the armature shaft and align the reference marks.

e. Secure the end bells (24 and 30) to the stator (10) with the two machine screws (23) and washers (22). Install safety wire MS20995-C32 to both screws (23).

f. Install brushes (20) into the brush holders of the motor assembly (29).

g. Install the cap (8) onto the terminal lug (15) and secure with washer (19) and nut (18).

h. Install the sleeve spacer (11) over the terminal lugs (15) and position the radio noise filter (9) onto the lugs and secure in place with washer (17) and nut (16).

i. Connect the electrical leads (1) to the terminals on the filter (9) and secure with plain washer (14), lock washer (13) and nut (12).

j. Install the motor assembly (29) into the fan housing (21) and route the electrical leads through the hole in the housing.

k. Align the three mounting holes in the motor assembly (29) with the mating holes in the housing (21); then install the spacers (7) and secure the motor and housing with the three bolts (4) and washers (5) to secure the assembly and safety the three bolts with MS20995-C32 safety wire.

l. Install the insulating sleeve (2) over the electrical leads extending out of the fan housing (21) and install the plastic grommet (3) over the wires and sleeve into the housing.

m. Install the propeller (26) onto the armature (34) shaft by screwing it in place and align the hole in the propeller bushing with the mating hole in the shaft and secure the propeller to the shelf with a new cotter pin (25).

13-37. CLEANING OF RECIRCULATING FAN MOTOR (Dynamic Air). No solvents should be used on the electrical leads or motor parts. Lint-free cloths and compressed air should be used for cleaning. Parts other than electrical may be washed in solvent (Federal Specification P-D-680) and dried with compressed air.

13-38. INSPECTION OF RECIRCULATING FAN MOTOR (Dynamic Air). (Refer to Table XIII-II for troubleshooting.)

a. Check the housing and propeller for any damage.

b. Check the electrical leads and radio noise filter for damage and broken insulation.

c. Check brushes for amount of wear which should not exceed 20 percent of the useful length or 0.125 of an inch.

NOTE

When brushes are removed for inspection only, each brush and corresponding holder should be marked to identify exact original positioning in the motor.

d. Check bearings and bearing seats for any damage of rotating bearings

e. Check armature for commutator wear and eccentricity. Evidence of wear requires finish and undercutting.

f. If further electrical tests are required on the motor, it should be done in an electrical shop familiar with maintenance and overhaul of rotating electro-mechanical devices such as starters, generators, etc. (Refer to Table XIII-I, Leading Particulars.)

13-39. REPAIR OF RECIRCULATING FAN MOTOR (Dynamic Air).

a. Replace damaged leads and insulation on all parts.

b. If commutator or armature is worn, it should be turned down enough to eliminate evidence of wear, and the mica between the bars undercut approximately 0.031 of an inch deep and 0.030 of an inch wide. Remove all particles of mica and polish the commutator with 3/0 sandpaper and remove all particles of copper between the bars. Coat the commutator with "long life" manufactured by Magnus Chemical Company, Inc., Garwood, New Jersey

c. Replace all rejected parts. Refer to Table XIII-I, Leading Particulars for tolerances of parts

d. Replace bearings if unit has 500 hours service or at any time the brushes are replaced.

NOTE

Bearings used in this unit are critical parts. Great care should be taken to protect bearings in handling and assembly to prevent damage to fits.

e. If holder and lead or holder has to be replaced, extreme care must be exercised to get them positioned to clear the commutator by 0.031 of an inch and to align the rectangular portion exactly parallel with the centerline of the shaft.

f. If finish on any parts is damaged, touch up and refinish it.

TABLE XIII-I. LEADING PARTICULARS (AXIAL FLOW FAN) (DYNAMIC AIR)

Electrical Current	27 Volts D.C.
Service	Continuous, sea level to 40,000 feet
R-F Interference	Filtered per Spec. MIL-I-6181
Operating Temperature	-54°C to + 121°C; -65°F to + 250°F
Motor Brushes	Body Length, New, 0.56 inch
	Useful Length 0.44 inch
Minimum Useful Diameter of Commutator	0.935 inch
Bearing Insert Seat, Shaft End, Inside Diameter	Min. 1.1811 inch; Max. 1.1814 inch
Bearing Insert Seat, Comm. End, Inside Diameter	Min. 0.8661 inch; Max. 0.8664 inch
Weight	5.25 lbs.
Requirements	300 cfm at 3.0" H_2O static pressure
	with standard air density of
	0.0765 lbs./cu./ft.

13-40. TESTS OF RECIRCULATING FAN MOTOR (Dynamic Air).

a. Electrical. The following should be done by an electrical shop:

CAUTION

Before making dielectric tests, be sure all carbon dust has been removed with compressed air.

1. Perform a dielectric test between the commutator and shaft at operating temperature The commutator and shaft must pass a hi-potential test of 500 RMS volts at 60 cycles AC for one minute, and insulation resistance shall measure 200 megohms or more. If test cannot be met, replace the armature

2. Make a dielectric test of the stator between the leads at operating temperature. It must pass a hi-potential test of 500 RMS volts at 60 cycles AC for one minute, and insulation resistance shall measure 200 megohms or more. If the test cannot be met, replace the stator

b. Prior to Reassembly:

WARNING

Before energizing fan or motor on bench test, strap it down and provide some type of wire guard around propeller to protect personnel. The fan has high suction and can draw a persons hand into the intake end.

1. The motor should be run on a low voltage of 8 to 14 volts until the brushes are 75 to 90 percent seated before full voltage is used. During this process, the motor can be loaded by installing the propeller on the shaft.

2. Check performance of motor with propeller installed on shaft. After operating at full voltage for 20 minutes, the maximum current input should not exceed 12.5 amperes and minimum speed should be 11,300 RPM

TABLE XIII-II. TROUBLESHOOTING CHART (RECIRCULATING FAN) (DYNAMIC AIR)

TROUBLE	PROBABLE CAUSE	REMEDY
No rotation	Power not supplied	Turn on power supply Check for open in wiring
	Brushes not making contact to commutator	Brushes worn, need replacement
Excessive current and low speed	Bearings misaligned or preloaded	Move armature back and forth to relieve pre-load
	Faulty bearings	Replace bearings
Low speed	Brushes not properly seated	Longer run-in
Excessive current and high speed	Shorted turns in field	Replace stator
Excessive current and bucking	Shorted turns in armature	Replace armature
Excessive vibration	Armature out of balance	Rebalance armature
	Propeller damaged	Replace and balance propeller
	Propeller out of balance	Rebalance propeller

13-41. REMOVAL AND INSTALLATION OF RECIRCULATING FAN AND MOTOR (Dukes). (Same as Paragraph 13-34)

13-42. TESTING DUKES 1092-00-3 RECIRCULATING FAN.

CAUTION

Do not get hands or clothing near open end of fan.

a. Connect orange lead to 28 vdc positive and black lead to negative.
b. Apply 28-volts and check for proper fan rotation and airflow. (See exploded view in Figure 13-9)
c. With fan running (28 vdc applied). check current draw. The current shall not exceed 14 amperes with a minimum of 9000 RPM

13-42a. DISASSEMBLY OF DUKES 1092-00-3 FAN. (Refer to the exploded view in Figure 13-9)
a. Cut and remove lockwire from bolts (1).
b. Remove four bolts (1) and sealing washers (2).
c. Remove motor assembly (4). along with fan (3). from housing (11). feeding motor leads through grommet (8)

CAUTION

Be careful not to bend blades of fan (3)

d. Loosen set screws and remove fan (3) from shaft of motor assembly.
e. Do not remove grommet (8). nameplate (9). or data plate (10) unless replacement is necessary

13-42b CLEANING AND INSPECTION OF DUKES 1092-44-1 MOTOR.
a. Clean parts by wiping with a clean rag moistened with solvent Wipe dry.
b Inspect fan (3) for bent blades. Check for evidence that fan had been hitting the housing (11). Replace the fan if damaged.
c Check leads of motor assembly (4) for cuts or deterioration. Inspect motor assembly for evidence of overheating. Rotate the motor shaft by hand. checking for any binding. dragging. or evidence of bearing failure Check that mounting collar is secure on motor and that all screws and nuts are tight.
d. Inspect grommet (8). nameplate (9). and data plate (10) for deterioration.
e. Inspect housing (11) for damage.

13-43. SERVICING DUKES 1092-44-1 MOTOR.

NOTE

Motor repair is limited to replacement of faulty parts. Replaceable parts are listed in the Cheyenne Parts Catalog.

a. Replace the brushes and service the motor as follows:

1. Remove two nuts (7), from thru bolts (16) at brush endbell of motor.

2. Push on the motor shaft to separate the brush endbell from the motor housing. Remove the brush endbell and armature. Separate the armature and endbells.

NOTE

The bearings will usually stay on the armature shaft. The end play compensator spring should be installed in the bearing cavity of the new front (fan side) endbell (5). Blow out brush dirt with compressed air. Discard the old front endbell (5), thru bolts (6), and nuts (7).

3. Inspect the armature for damage. Polish or take light cut of commutator, if needed. Check the bearings for roughness. If defective, the motor assembly must be replaced.

4. Refer to the diagram. Unsolder brush leads and remove old brushes. Solder leads of new brushes as shown.

5 Lay the brush endbell on the bench. Insert the brushes into the brush holders. Push the brushes in to compress the springs and insert the commutator of the armature between the brushes. The bearing on the armature shaft will enter the bore in the brush endbell.

6. Insert the armature through the motor housing until the brush endbell is seated on the housing Install end play compensator spring on bearing on shaft (with the 6 spring contacts into the endbell). Install new endbell (5) P N 1092-45-2. Insert the new thru bolts (6) P/N AN3-43A and install the new nuts (7) P N AN364-1032A. Torque to 15 inch-pounds

7 Connect the orange motor lead to a 12 vdc power source and the black lead to negative. Run the motor for approximately 30 minutes to seat the new brushes.

b. Refinish the parts as follows:

1. Repair black anodized surfaces as necessary. Apply chemical film per MIL-C-5541

2. Touch up black painted surfaces with rustoleum #412 flat black, or equivalent

13-43a REASSEMBLY OF THE DUKES 1092-00-3 FAN.

a. Install fan (3) on shaft of motor assembly (4) with hub out (facing end of shaft). Apply RTV 732 to threads of set screws. Torque set screw to 12-25 inch-pounds.

b. Insert motor assembly (4) with fan (3) in housing (11), feeding motor leads through grommet (8) Install four bolts (1) and sealing washers (2) holding motor assembly so that the fan is centered in the housing Loosen and tighten opposite bolts until the fan is centered, with at least 0.010 inch clearance between each of the five fan blades and the housing.

CAUTION

Be careful not to bend blades of fan.

c. After the fan is centered and the bolts are tight, apply PR-122, B-2 Sealant (Products Research Co) or equivalent, between grommet (5) and motor leads.

d Safety bolts (1) in pairs with MS20995C32 lockwire.

e. Retest fan as described in Paragraph 13-42.

13-44. SPARK PLUG (P/N 39D18).

a. Removal

1. Remove the access panel on the right side of the nose section to expose the heater and gain access to the spark plug.

NOTE

Insure that the heater electrical circuits are de-energized.

2. Unscrew and remove the high voltage lead connector at the spark plug. Exercise care to avoid fouling or damaging the connector.

3. Using a 7/8 inch deep hex socket, unscrew and remove the spark plug. Make sure the spark plug gasket is removed with the spark plug. It will normally stick on the spark plug threads.

THIS SPACE INTENTIONALLY LEFT BLANK

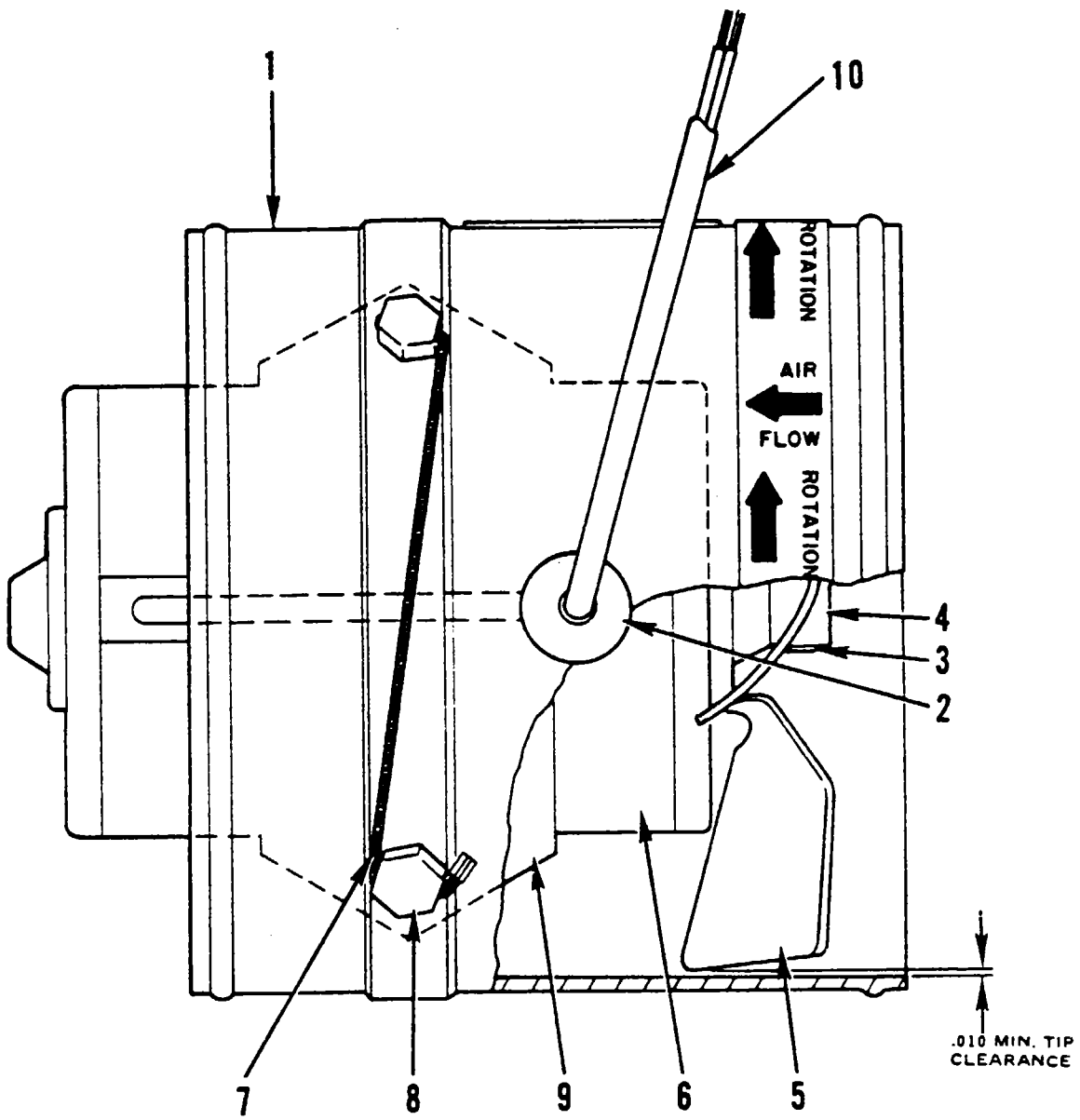

1. HOUSING
2. GROMMET
3. SET SCREWS
4. FAN HUB
5. FAN
6. MOTOR ASSEMBLY
7. LOCKWIRE
8. BOLTS
9. COLLAR
10. LEAD WIRES

Figure 13-9. Recirculation Fan and Motor Assembly (Dukes)

C7

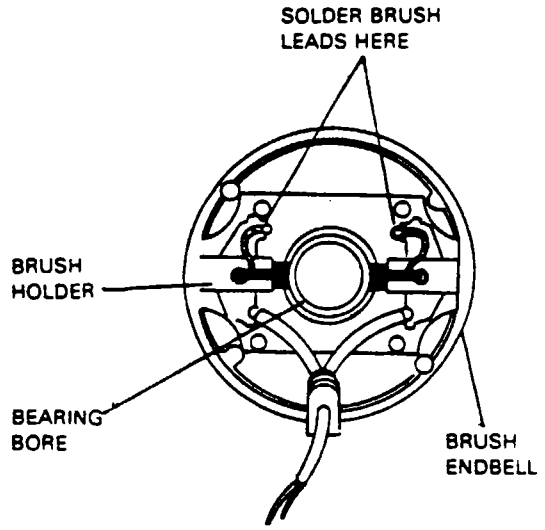

1 BOLT - 4 REQUIRED
2 WASHER, SEALING - 4 REQUIRED
3 FAN
4 MOTOR ASSEMBLY
5 ENDBELL
6 THRU BOLT - 2 REQUIRED
7 NUT - 2 REQUIRED
8 GROMMET
9 NAMEPLATE
10 DATA PLATE
11 HOUSING

PUSH BRUSHES INTO BRUSH HOLDERS. COMPRESSING SPRINGS INSERT COMMUTATOR OF ARMATURE BETWEEN BRUSHES BEARING ON ARMATURE SHAFT WILL ENTER BEARING BORE OF BRUSH ENDBELL

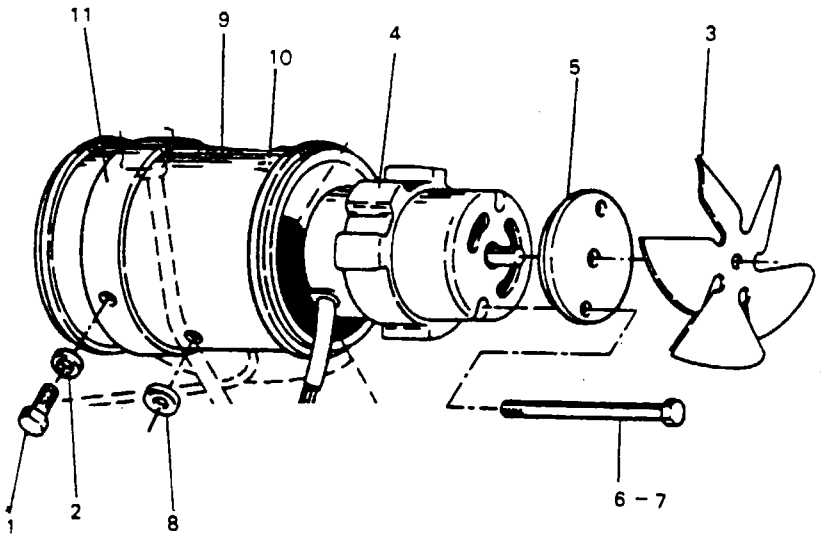

Figure 13-9. Recirculating Fan and Motor Assembly (Dukes) (cont.)

b. Inspection and Servicing (Spark Plug):

1. If the spark plug appears to be in good condition, except for a mild coating of oxide on the porcelain and electrode, it may be cleaned and reused. Cleaning is accomplished on a conventional airplane type spark plug cleaner, except that it will be necessary to use two or more adapters in order to raise the long extension of the plug far enough out of the cleaner nozzle opening to perform an effective job. Plug the ceramic insert cavity at the terminal end of the plug with a piece of paper or cloth to keep out any of the cleaning sand. Wipe this cavity out thoroughly with a cloth wet with carbon tetrachloride. If after cleaning the spark plug porcelain is white and the electrode is not eroded, proceed to check the ground electrode in the heater and adjust the spark gap in accordance with Paragraph 13-44 (c) and Figure 13-13.

NOTE

If the spark plug fails to clean up properly and/or the electrode is badly eroded, it should be replaced.

c. Spark Gap Check and Adjustment: (See Figure 13-13.)

A spark gap of 0.156 to 0.187 of an inch must be maintained on the P/N 39D18 spark plug. This gap should be checked any time a plug is replaced or at the time of heater overhaul. A spark gap greater than that specified can shorten the life of the ignition assembly. There are several methods in which the spark gap of this heater may be checked. Method I is recommended when the heater is being overhauled and before the installation of the fuel nozzle. Methods II and III are suitable for checking the gap through the spark plug well when the heater is not disassembled.

Method I:

1. Using 5/32 inch drill (0.156) or a piece of 5/32 rod, reach down through the small opening in the combustion head and find the ground electrode. (It is welded inside the head.)

2. Move the drill along the side of the electrode on the spark plug side. (Movement should be from the outer edge towards the center.) The drill should just pass through the spark plug gap opening. Should the drill fail to pass through this opening, the gap is too narrow. If it passes through too freely, the gap is too wide. In either case, it will be necessary to bend the ground electrode in the direction required. This may be done by removing the spark plug and reaching through the opening.

3. Recheck the gap after repositioning of the ground electrode.

Method II:

1. Measure the distance between the seating surface of the spark plug with a new gasket installed to the end of the plug electrode.

2. Using a depth gauge, measure the distance between the ground electrode in the heater to the spark plug seating surface in the heater jacket and check this measurement against the measurement obtained in Step 1. The difference should be between 0.156 to 0.187 of an inch.

3. The ground electrode can be bent to obtain the required gap.

Method III:

1. Fabricate or purchase from Piper, the special tool from dimensions given in Figure 13-13.
2. Install the threaded end of the tool into the spark plug hole.
3. Slide the rod of the tool into the combustion head until it contacts the ground electrode.
4. Check that the indicator ring on the rod lines up with the end of the tool. The ground electrode may be bent to obtain the required gap.

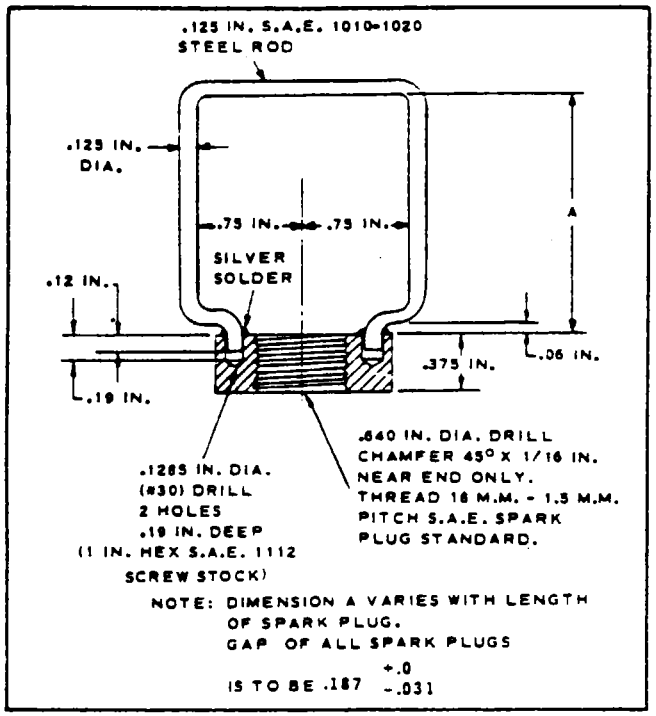

Figure 13-10. Spark Plug Fixture

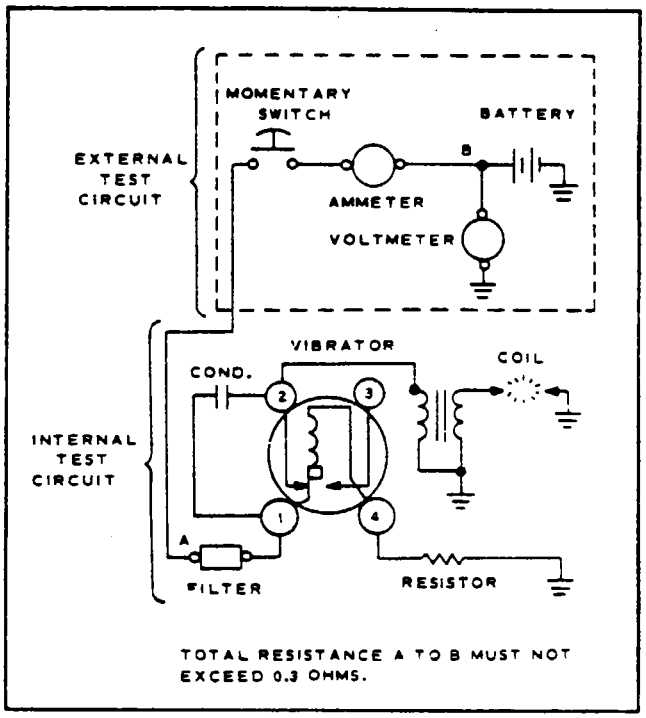

Figure 13-11. Wiring - Test Setup

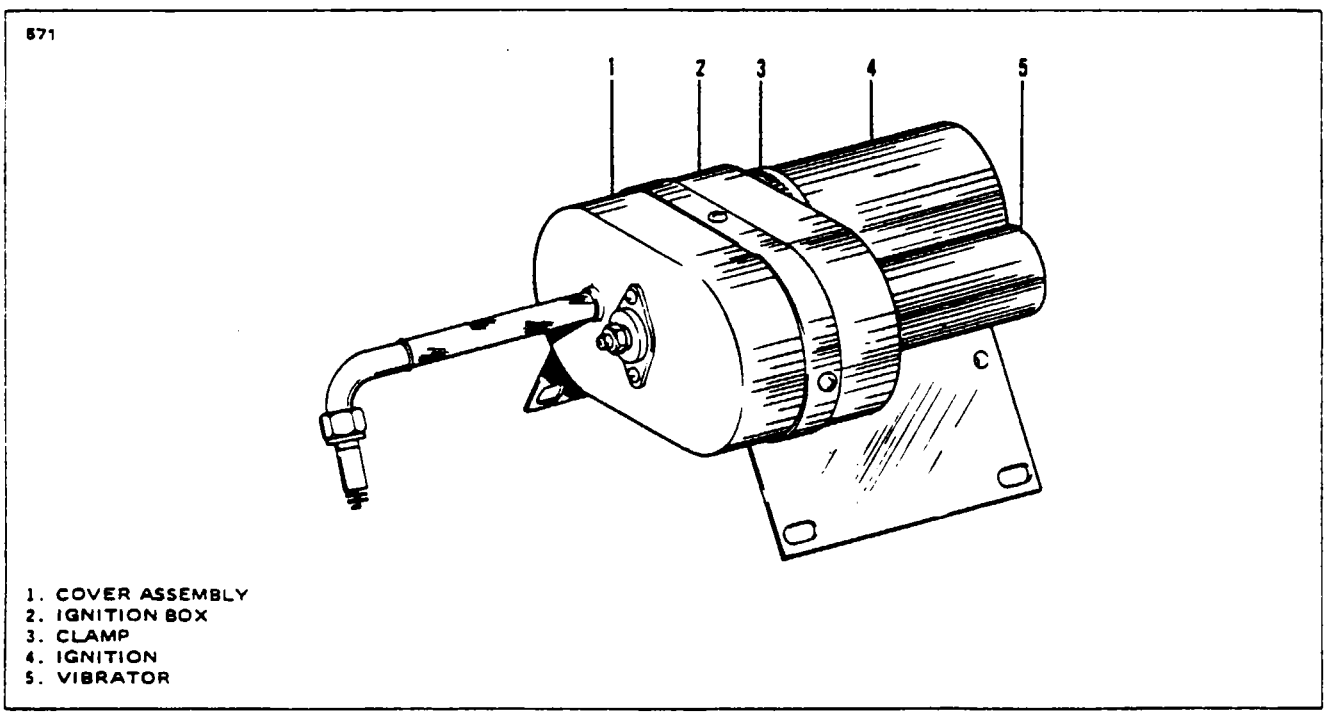

Figure 13-12. Ignition Unit Assembly (Typical)

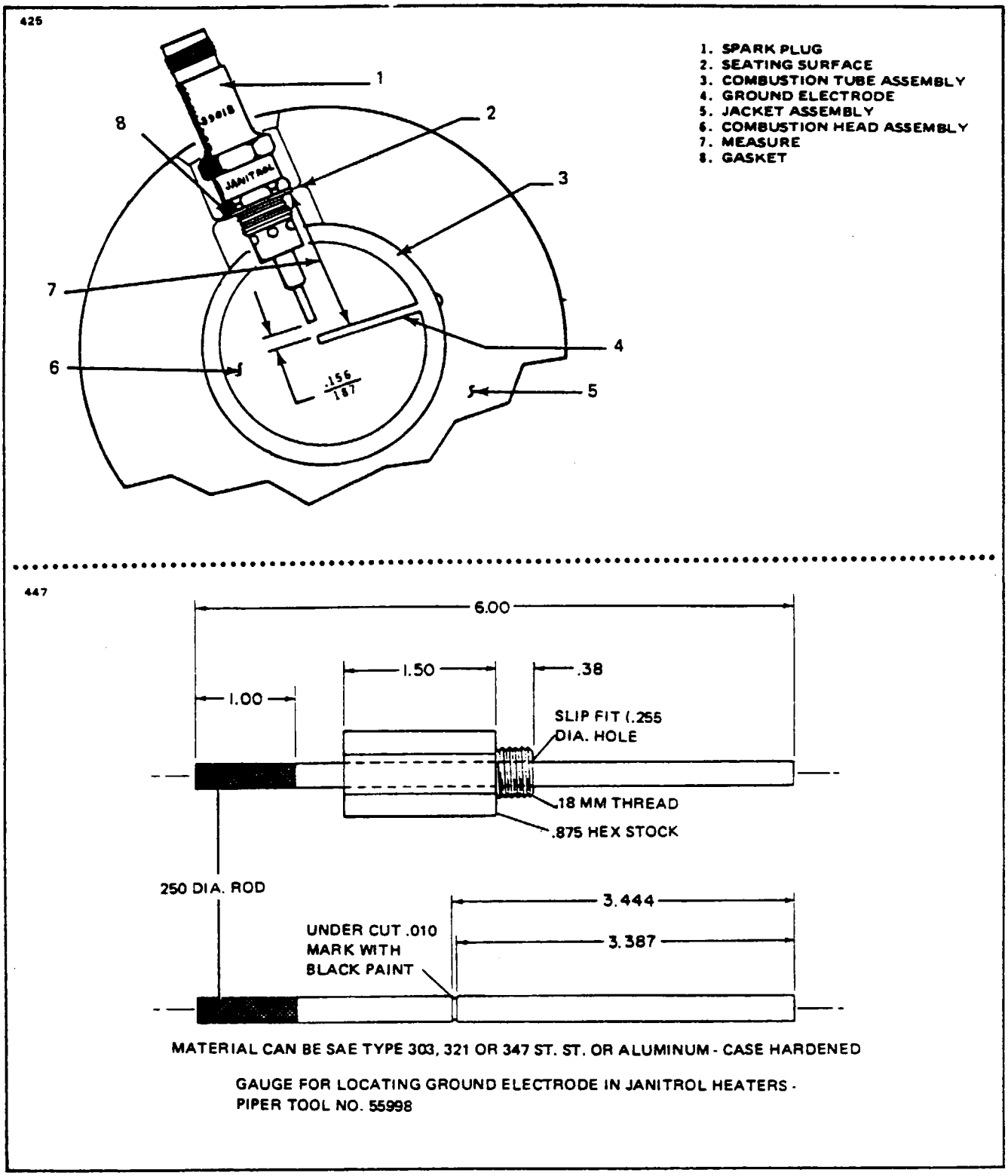

Figure 13-13. Spark Plug (P/N 39D18) Gap Adjustment and Tool

NOTE

Inspect the ground electrode for erosion. If it is eroded to approximately half of its original 1/8 inch diameter, it should be replaced. This can be done as follows:

(a) Grind off the head of the rivet where it projects through the combustion head and remove the electrode.
(b) Install a new CRES rivet AN125452 which is 1.500 inches in length.
(c) HELIARC tack weld only the rivet head to hold it in place.
(d) Check spark gap as noted in Methods I, II or III.

d. Installation:

1. If a new spark plug is being installed, be sure to adjust the spark gap as outlined in Paragraph 13-44. c. Do not bend the electrode on the spark plug.
2. Place a new spark plug gasket on the threads. A small drop of Aviation Permatex, or similar material may be used on the gasket to help hold it to the spark plug shell during installation.
3. Screw the spark plug into the heater with a deep socket wrench. Tighten to a torque of 28 foot-pounds.
4. Carefully insert the spring connector on the high voltage lead into the spark plug shell; press down gently and start the nut on the threads. Tighten the nut to 20 foot-pounds.
5. Operate the heater to check dependability and replace the access panels.

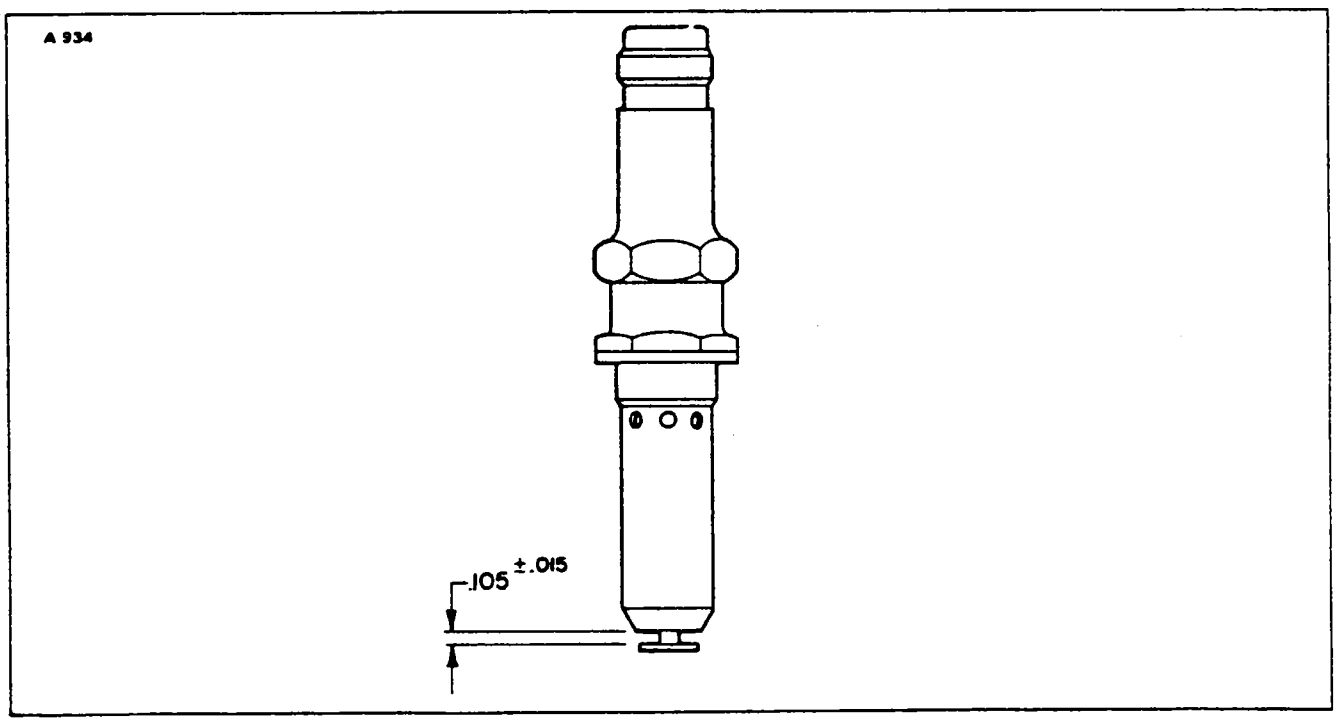

Figure 13-14. Spark Plug (10E75-1 and 10E75-2)

13-45. SPARK PLUG. (P/N 10E75-1 and 10E75-2)

a. Removal:

1. Remove the access panel on the right side of the nose section to expose the heater and gain access to the spark plug.

NOTE

Insure that the heater electrical circuits are de-energized.

2. Unscrew and remove the high voltage lead connector at the spark plug. Exercise care to avoid fouling or damaging the connector.

3. Using a 7/8 inch deep hex socket, unscrew and remove the spark plug. Make sure the spark plug gasket is removed with the spark plug. It will normally stick on the spark plug threads.

b. Inspection and Servicing (Spark Plug):

1. If the spark plug appears to be in good condition, except for a mild coating of oxide on the porcelain and electrode, it may be reused. If spark plug gap exceeds .105 ± .015 of an inch, replace plug. (Refer to Figure 13-14.)

c. Installation:

1. Place a new spark plug gasket on the threads. A small drop of Aviation Permatex, or similar material may be used on the gasket to help hold it to the spark plug shell during installation.

2. Screw the spark plug into the heater with a deep socket wrench. Tighten to a torque of 28 foot-pounds.

3. Carefully insert the spring connector on the high voltage lead into the spark plug shell; press down gently and start the nut on the threads. Tighten the nut to 20 foot-pounds.

4. Operate the heater to check dependability and replace the access panels.

13-46 IGNITION UNIT. This unit converts 28-volt DC to high voltage, oscillating current capable of producing a continuous spark gap in the combustion chamber of the heater. This unit remains energized and produces a continuous spark during heater operation. It contains a condenser, resistor, radio noise filter and vibrator socket. It also has an externally mounted vibrator and ignition coil.

13-47. IGNITION UNIT REMOVAL AND INSTALLATION.

a. Removal: (Refer to Figure 13-17, 13-18, 13-19, or 13-20.)

NOTE

Make sure the heater electrical circuits are de-energized.

1. Disconnect the primary wire from the primary terminal of the ignition assembly.

2. Carefully unscrew and disconnect the high voltage ignition cable at the spark plug. Exercise care to avoid fouling or damaging the connector.

3. Remove the attaching hardware and lift the ignition assembly off the heater or mounting brackets on the heater jacket.

b. Installation: (Refer to Figure 13-17, 13-18, 13-19 or 13-20.)

1. Place the ignition assembly in position on the heater or on the brackets attached to the heater jacket, with the high voltage cable facing the spark plug end of the heater.

2. Install attaching hardware and secure.

3. Carefully connect the high voltage lead to the spark plug.

4. Connect the primary lead to the primary terminal on the ignition assembly and tighten the nut securely.

5. Check for proper heater operation.

13-48. TESTING IGNITION UNIT. The ignition unit does not require complete overhaul. The following test will indicate whether or not the unit is operational, and whether the vibrator should be replaced before reinstallation in the aircraft. The following equipment is required to test the components:

a. A battery that will supply power at approximately 28-volts DC.

b. A voltmeter with a range of 0-30 volts.

c. A lead from the battery to the test fixture in which is included an ammeter with a range of 0-3 amperes and a normally open, momentary closed switch. The total resistance of the lead, including the ammeter and switch must not exceed 0.3 ohms.

d. Spark Plug Gap: (Spark Plug P/N 39D18)

1. A spark gap of .156 to .187 of an inch. A convenient means of arranging the correct spark gap is to install a spark plug, P/N 39D18, in a text fixture arranged to provide a ground electrode and a .156 to .187 of an inch spark gap. Refer to Figure13-10 for information on fabricating the fixture.

NOTE

Any one of several spark plugs may be used with the spark plug fixture detailed in Figure 13-10.However, the "A" dimension in that sketch must be varied with the length of spark plug electrode to provide a gap of .156 to .187 of an inch for all spark plugs.

CAUTION

When testing an ignition unit, do not use a screwdriver as a substitute for a spark plug and spark plug fixture.

e. Spark Plug Gap: (Spark Plug P/N 10E75-1 and 10E75-2)

1. A spark plug gap of .105 ± .015 of an inch is required. If gap exceeds this measurement replace the spark plug. Connect the high tension lead to the spark plug and lay it to one side while testing If the ignition unit is being tested on the heater, plug the spark plug hole to prevent escaping fumes.

f. The high tension shielded ignition lead between the ignition unit and the spark plug is a part of the cover assembly.

g. Arrange the test equipment as shown in Figure 13-11.

13-49. OPERATIONAL TEST OF IGNITION UNIT.

a. Close the momentary switch and read the voltmeter and ammeter. Release the momentary switch immediately.

b. The amperage reading at 28-volts DC must be 1.25 ± 0.25 amperes.

13-50. VIBRATOR. The vibrators should be replaced after 250 hours of operation. This schedule applies equally to vibrators installed in new units as well as new vibrators installed in ignition units that have been in service.

13-51. VIBRATOR REMOVAL AND INSTALLATION.

a. Remove the clamp that secures the vibrator in position.

b. Remove the vibrator from the ignition unit; it may require a slight back and forth movement to remove it from the unit. A piece of masking or friction tape around the exposed portion of the vibrator will help to grip the vibrator for removal.

c. Install the new vibrator with the index marks aligned. The connector pins on the vibrator can be felt entering the pin sockets in the vibrator socket; then press the vibrator fully and firmly into position.

NOTE

Refer to Parts Catalog for correct part number when replacing vibrator.

d. Replace the clamp.

NOTE

If replacement of vibrator fails to correct operational failure, further disassembly and inspection may be required.

13-52. INSPECTION OF IGNITION UNIT. Inspect components as directed in TableXIII-IIIand Figure 13-12.

NOTE

Replace any component that fails to meet checks listed in Table XIII-III

TABLE XIII-III INSPECTION (See Figure 13-12)

Index No.	Nomenclature	Inspection
1	Cover Assembly	Inspect for security of lead assembly to cover. Ignition cable, grommet terminal and connector for carbon tracks, cracks or distortion. Repair or replace for any of above conditions.
4	Ignition Coil	Inspect for broken bakelite, carbon tracks, oil leaks, and dents in coil cover. Replace for any of the above conditions.

13-53. LIMIT (OVERHEAT SAFETY) SWITCH. (Refer to Figure 13-17, 13-18, 13-19 or 13-20.)

a. Removal:

1. If the limit switch is damaged or defective, disconnect the two electrical leads from the switch terminals. Be sure to mark the leads for proper reassembly. (The switch terminals are identified by numbers "1," "2" and "3.")

2. Remove the attaching hardware and lift the limit switch and spacer (gaskets) from the jacket opening.

b. Installation:

1. Install the limit switch and spacer (gaskets) by placing them in position in the heater jacket opening and installing attaching hardware.

2. Tighten screws securely; then reconnect the electrical leads in accordance with markings made during disassembly. (If in doubt about electrical connections, refer to the wiring diagram. Section XV.)

13-54. CYCLING SWTICH. (Refer to Figure 13-4.)

a. Removal:

1. If the switch is damaged or defective. disconnect the electrical leads, being sure to mark them for proper reassembly. Remove the two screws (10), lock washers (9), and plain washers (8) and lift the cycling switch (6), gasket (5), and switch plate (7) from the top of the duct (4).

b. Installation:

1. Install the cycling switch (6), gasket (5), and switch plate (7) by placing in position on the heat duct opening and securing with the two screws, (10), lock washers (9) and plain washers (8). Tighten screws securely; then reconnect the electrical leads to their respective terminals as marked during disassembly.

NOTE

No attempt should be made to repair either the limit switch or the cycling switch. If they do not operate properly, they should be replaced.

13-55. REMOVAL OF FUEL PUMP, PRESSURE RELIEF VALVE AND HEATER FUEL FILTER.

a. Removal and installation of heater fuel filter. (Refer to Section IX.)

b. Disconnect electrical leads from pump.

c. Disconnect all fuel lines connected to the pump and pressure relief valve and remove the valve.

d. Free the hardware securing the pump and remove the pump from the aircraft.

NOTE

Refer to Parts Catalog for replacement part number of the fuel pump motor assembly.

13-56. FUEL PRESSURE RELIEF VALVE BENCH TEST AND ADJUSTMENT.(Refer to Figure 13-15)

a. The following test equipment is required:

1. A reservoir and pump capable of delivering 8 gph at 125 psig

2. A pressure gauge with a scale range approximately double the pressure setting of the valve. (200 psig.)

3. A nozzle assembly similar to the type installed in the heater assembly. (Refer to Parts Catalog.)

4. Tubing or pressure hose .250 inch diameter with the necessay fittings

5. Test fluid MIL-J-5161F, Grade II or equivalent.

b. Set up the test equipment as shown in Figure 13-15.

c. Loosen the locknut (4) and start the pump.

d. Turn the adjusting cap (1) clockwise to increase power or counterclockwise to decrease pressure until 100 ± 5 psig is indicated on the pressure gauge.

c. Tighten the locknut (4) against the adjusting cap (1); torque to 12 foot-pounds. Ascertain that the O-ring (3) remains in the body (6) groove

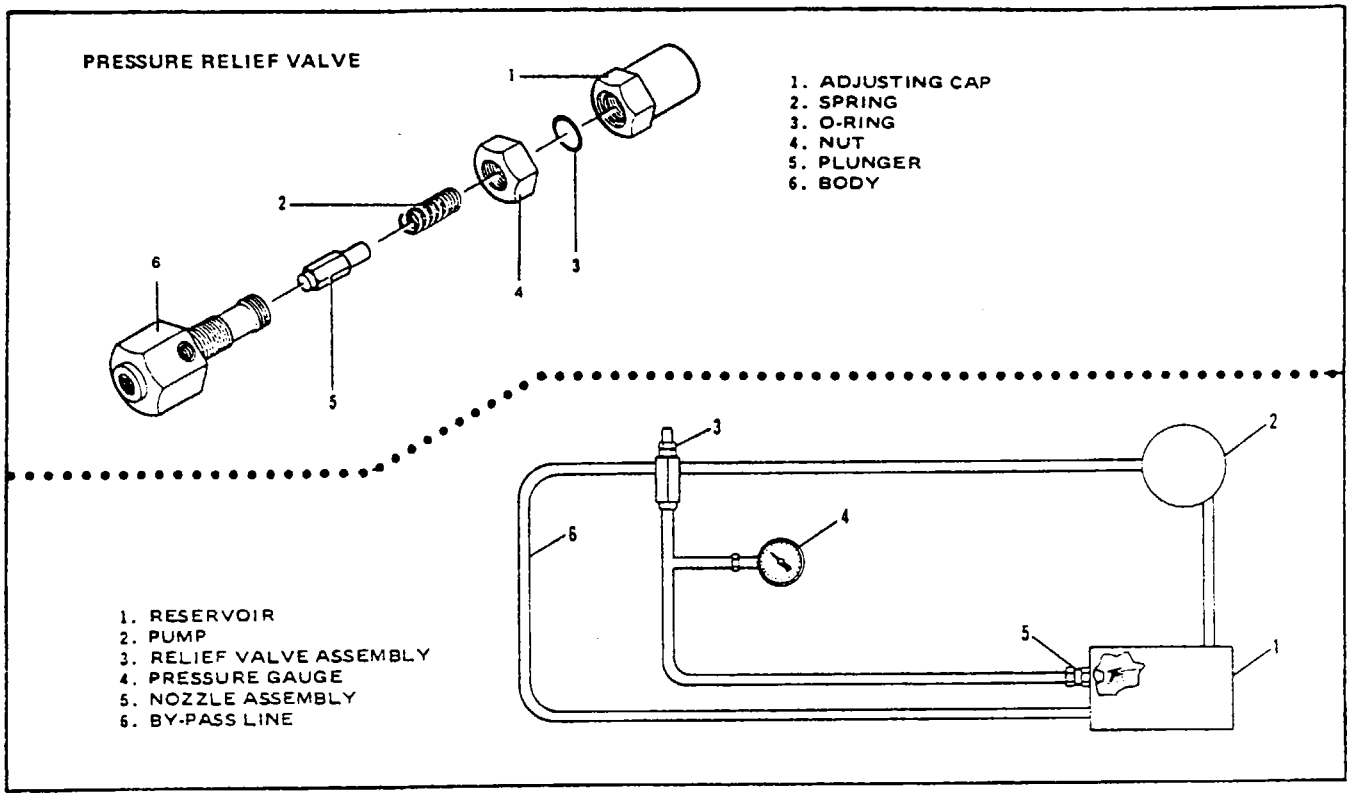

Figure 13-15. Fuel Pressure Relief Valve Bench Test

f. Stop and start the pump several times to recheck the pressure setting Make sure there are no leaks at the O-ring seal

g. A final check and possible adjustment should be made after installation of the relief valve in the aircraft system with the airplane boost pump on.

13-57. CABIN HEATER FUEL SOLENOID VALVE REMOVAL AND BENCH TEST.

a. Make certain the crossfeed valve is in the off position and drain the fuel from the right wing

b Disconnect electrical lead and remove the solenoid valve located under the copilots seat at the main spar on aircraft model PA-31T serial numbers 31T-7400002 to 31T-7720069 inclusive

c. Bench Test solenoid valve by applying air pressure 100 psi to the inlet port of the valve while submerging the outlet port in a container of jet fuel. No leakage is allowed.

13-58. CABIN HEATER, FUEL REGULATOR AND SHUTOFF VALVE.

a. Removal.

NOTE

It is recommended that the fuel regulator and shutoff valve be replaced every two years or by the date written on regulator.

1. Disconnect the electrical lead from the valve.

2. Disconnect the fuel lines from the inlet openings. Make note of these connections for correct installation.

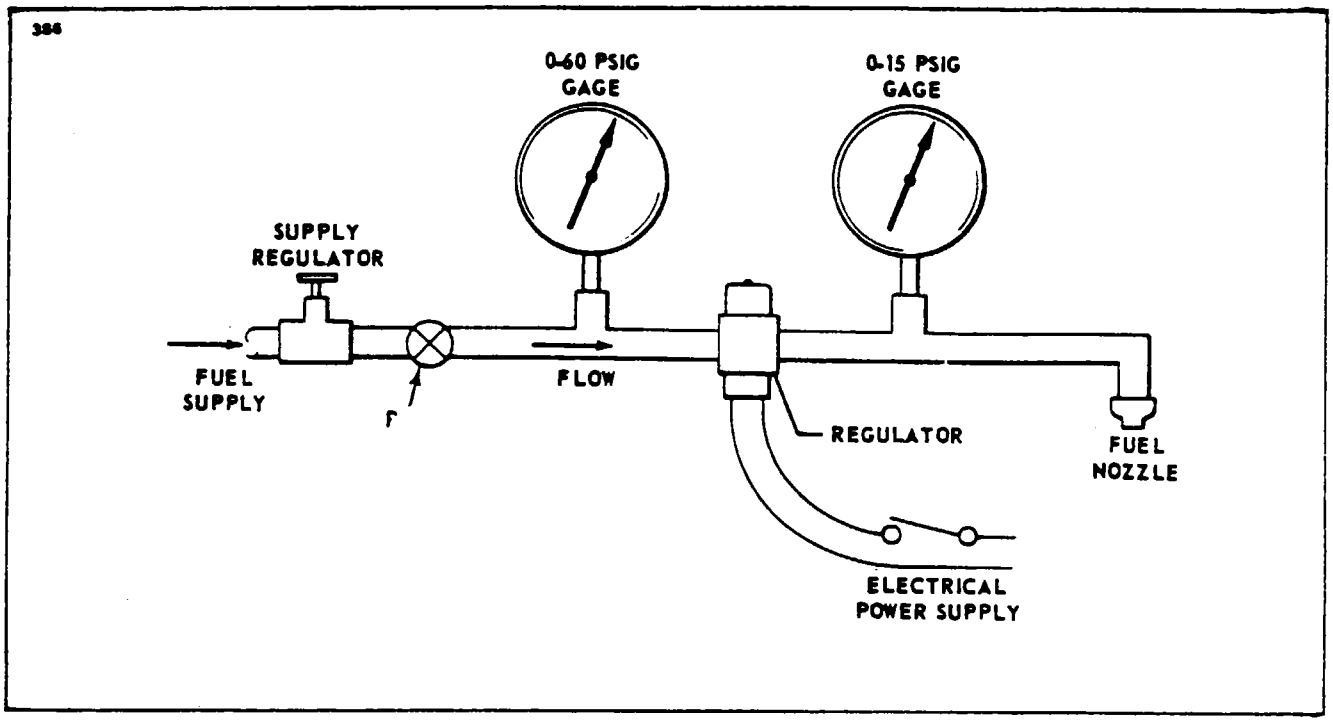

Figure 13-16. Test Setup-Fuel Regulator

3. Remove the two attaching screws to free the unit from its mounting.

b. Adjustment. The fuel regulator and shutoff valve used in this system are adjustable but not repairable. The following steps cover the proper adjustment of this unit.

1. Install the regulator in a test stand similar to that shown in Figure 13-16.

2. Install a 2.5 gph nozzle (Janitrol Part No. D08D09). Stoddard solvent can be used for testing. Do not use gasoline due to explosion and fire hazard.

3. Apply a fluid pressure of 20 to 30 psi and energize the solenoid.

4. Using a screwdriver, break the adjustment seal and adjust the regulated outlet pressure as close to 7.5 psi as possible. (Turn clockwise to increase pressure; counterclockwise to decrease pressure.)

5. Slowly vary the inlet pressure from 10 to 50 psi. The outlet pressure should remain between 7.0 and 8.0 psi.

6. With the inlet pressure of 50 ± 3 psi de-energize and energize the solenoid at least twice. The outlet pressure should be 7.0 to 8.0 psi with solenoid energized and when the solenoid is de-energized the pressure should drop to zero and the fuel flow from the nozzle should stop.

7. With solenoid energized, slowly reduce inlet pressure from 50 to 10 psi. Outlet pressure should remain between 7.0 to 8.0 psi.

8. During the above tests, observe for signs of external leakage. Any leakage is cause for rejection of the regulator. After satisfactory adjustment has been made, apply Glyptol around threads of the adjustment screw and in the slot.

Installation.

1. Attach the fuel regulator and shutoff valve to its mounting with the two attaching screws.

2. Place the fuel regulator and shutoff valve into position between the fuel line connections and tighten all connections securely.

3. Connect the electrical lead. Be sure to slide an insulating sleeve (or tape) over the connection to avoid a short circuit and secure the sleeve in place.

4. Operate the heater to make sure the unit is functioning properly.

13-59. INSTALLATION OF FUEL PUMP, PRESSURE RELIEF VALVE AND HEATER FUEL FILTER.

a. Secure the pump to the aircraft by attaching the hardware.
b. Connect the fuel lines to the pump and pressure relief valve and tighten.
c. Assure proper pump operation.
d. Check for leaks.
e. Install fuel filter. (Refer to Section IX.)

13-60. COMBUSTION AIR PRESSURE SWITCH. (EARLIER MODELS ONLY.)(Refer to Figures 13-17 and 13-18.)

1. Disconnect electrical leads from the terminals of the combustion air pressure switch being sure to mark them for proper reassembly. Disconnect the tube from the switch cap. Exercise caution not to exert excessive bending of the tube. (It is "tacked" to the combustion chamber inside the jacket.)

2. Unscrew and remove the combustion air pressure switch from the fitting on the combustion air inlet tube.

b. Installation:

1. Install the combustion air pressure switch by rotating it on the threaded fitting of the combustion air inlet tube and tighten it securely. Exercise caution not to overtorque the switch as this could change the setting

2. Connect electrical leads to their respective terminals in accordance with markings made during removal. If in doubt regarding proper connections, refer to wiring diagram, Section XV. Connect the tube to the switch cap.

3. Check for proper heater operation.

13-61. COMBUSTION AIR PRESSURE SWITCH. (PA-31T Serial Numbers 31T-7820067 and up and PA-31T1 Serial Numbers 31T-7904008 and up.) (Refer to Figure 13-7)

a. Removal:

1. Disconnect electrical leads from the terminals of the combustion air pressure switch being sure to mark them for proper reassembly.

2. Disconnect the tubes (17 and 18) from the switch cap. Exercise caution not to exert excessive bending of the tube.

3. Remove the attaching hardware that secures the elbows (15 and 16) to the regulator assembly (14).

b. Installation:

NOTE

DO NOT disassemble the switch assembly from the regulator assembly This will change the setting of the regulator.

1. Install the elbows (15 and 16) to the regulator assembly with attachment hardware.

2. Connect electrical leads to their respective terminals in accordance with markings made during removal. If in doubt regarding proper connections, refer to wiring diagram, Section XV

3. Connect the tubes (17 and 18) to the switch cap.

4. Check for proper heater operation.

13-62. OVERHAUL INSTRUCTIONS. The heater assembly shall be overhauled after 1000 hours or whenever the pressure decay test requirement cannot be met The heater should be removed from the aircraft, disassembled, all parts thoroughly inspected and necessary repairs and or replacements made prior to reassembly Detailed step-by-step instructions are included for a complete heater overhaul. In some instances, however, inspections may reveal that it is unnecessary to remove certain parts. If so, those portions of the overhaul procedures may be eliminated.

NOTE

For disassembly and reassembly operations, refer to the exploded view drawings and parts list.

13-63 DISASSEMBLY OF HEATER (62D33). (Refer to Figure 13-17.) Disassemble the heater in the general sequence of the index numbers in Figure 13-17. Pay special attention to the following instructions

NOTE

Label all wires prior to removal, so they can be replaced properly at reassembly.

a Remove the machine screw (15) and slide the adapter (16) off the combustion air inlet tube

b. Disconnect and remove electrical wiring and individual wires from the various components on the heater It is advisable to remove wire harness assembly intact.

c Carefully disconnect the high voltage ignition lead at the spark plug. Handle the spring connector on the end of this lead with care to prevent fouling or damage.

d Remove the spark plug (18) using a 7 8 inch deep socket. Make sure the spark plug gasket is removed

e Remove the four screws (9), lock washers (10), and cable straps (11) to free the ignition assembly (13) from the combustion tube and jacket assembly (30) (Refer to Paragraph 13-52 for ignition unit inspection.)

f Remove the fitting (21) and nut (22) with a 3 4 inch deep socket. This will free the shroud (24) and gasket (25)

g Remove the two screws (53) and lock washers (52) and disconnect the electrical wire to terminal (27) Carefully take the fuel feed, nozzle holder, and solenoid valve assembly (54) out of the combustion head Handle this assembly carefully to avoid damaging the nozzle (35). Also, remove the gasket (50)

h. Carefully unscrew and remove the spray nozzle (35) from the fuel feed, nozzle holder and solenoid valve assembly (54). Remove the O-ring (49). Do not disassemble the valve assembly (45) unless it requires cleaning

CAUTION

Handle the nozzle with care to avoid damage to the tip. The material around the orifice is very thin, and any blow on the face of the nozzle can distort the spray pattern or effect the burning rate This, in turn, can cause malignition or improper combustion.

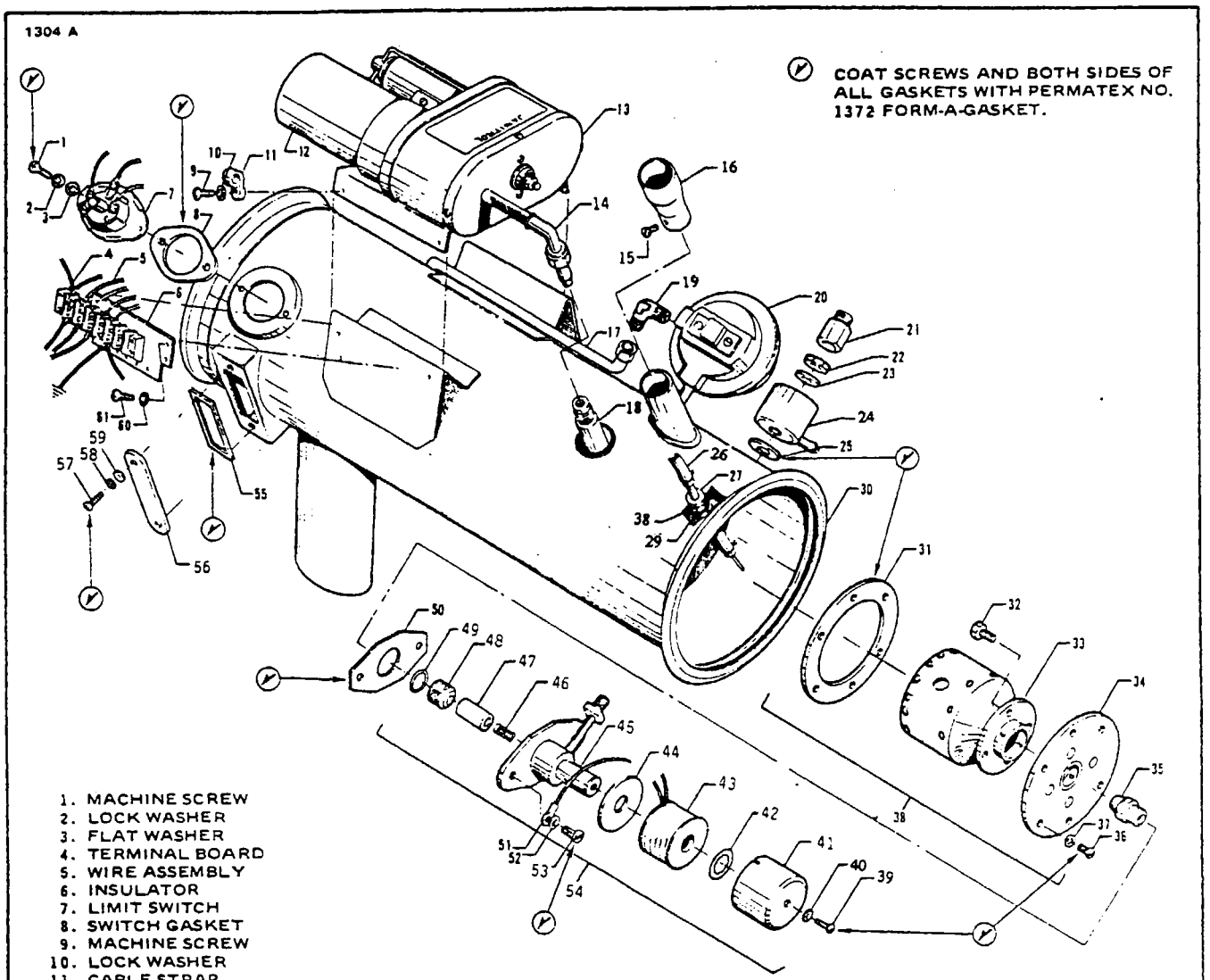

1. MACHINE SCREW
2. LOCK WASHER
3. FLAT WASHER
4. TERMINAL BOARD
5. WIRE ASSEMBLY
6. INSULATOR
7. LIMIT SWITCH
8. SWITCH GASKET
9. MACHINE SCREW
10. LOCK WASHER
11. CABLE STRAP
12. COIL (IGNITION)
13. IGNITION ASSEMBLY
14. HIGH TENSION LEAD
15. MACHINE SCREW
16. ADAPTER
17. TUBE (COMBUSTION AIR SWITCH)
18. SPARK PLUG
19. ELBOW
20. COMBUSTION AIR SWITCH
21. FITTING
22. NUT
23. GASKET
24. SHROUD
25. GASKET
26. SLEEVE
27. TERMINAL
28. LOCK WASHER
29. NUT
30. COMBUSTION TUBE AND JACKET ASSEMBLY
31. HEAD GASKET
32. MACHINE SCREW
33. HEAD ASSEMBLY
34. HEAD PLATE ASSEMBLY
35. SPRAY NOZZLE
36. MACHINE SCREW
37. LOCK WASHER
38. COMBUSTION HEAD ASSEMBLY
39. MACHINE SCREW
40. LOCK WASHER
41. SHELL COVER
42. PREFORMED PACKING
43. SOLENOID COIL ASSEMBLY
44. BASE PLATE
45. VALVE ASSEMBLY
46. SPRING
47. PLUNGER
48. SEAT
49. PREFORMED PACKING
50. GASKET
51. WIRE ASSEMBLY
52. LOCK WASHER
53. MACHINE SCREW
54. FUEL FEED, NOZZLE HOLDER AND SOLENOID VALVE ASSEMBLY
55. GASKET
56. COVER PLATE
57. MACHINE SCREW
58. LOCK WASHER
59. FLAT WASHER
60. LOCK WASHER
61. MACHINE SCREW

Figure 13-17. Heater Assembly Exploded View (62D33)

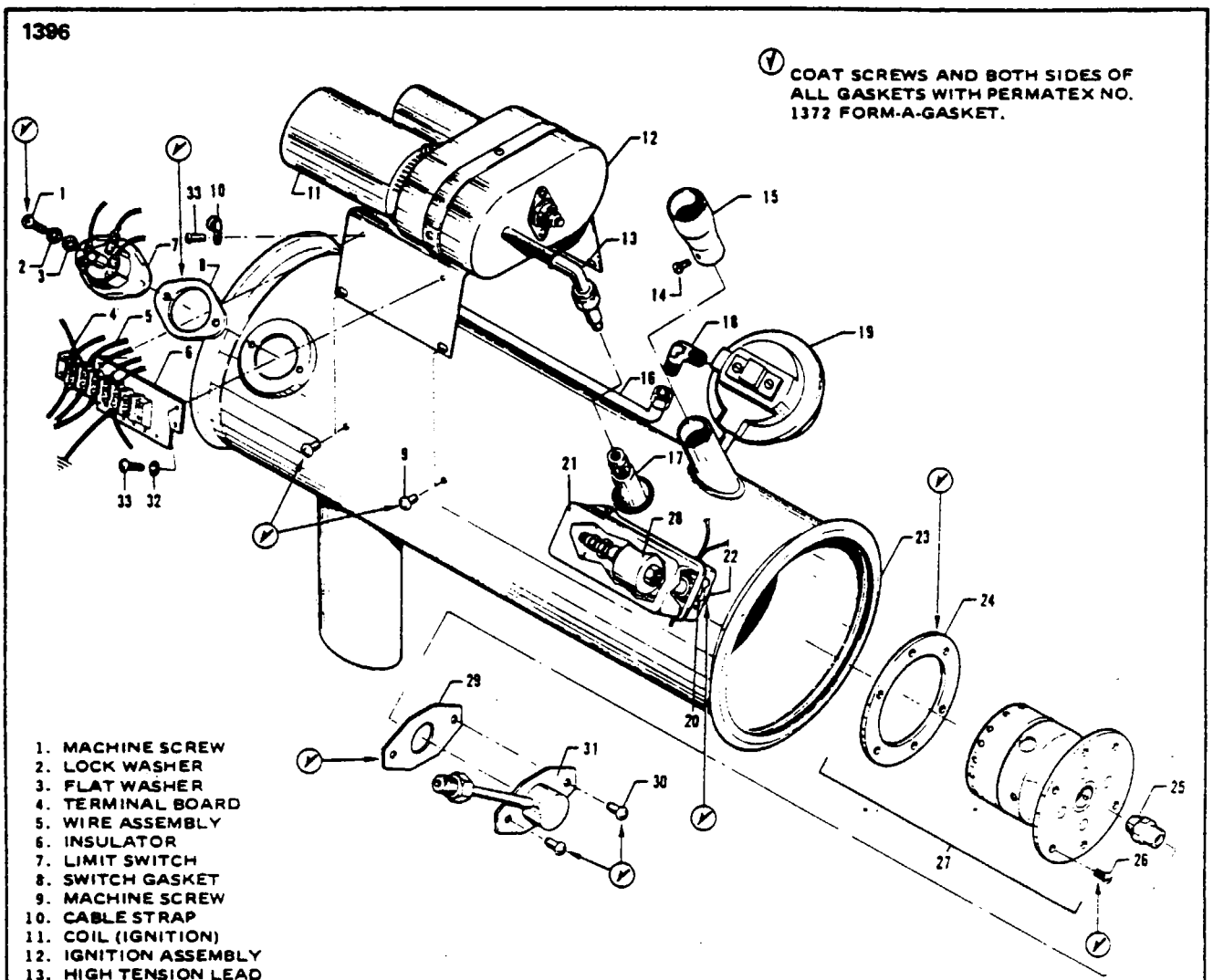

1. MACHINE SCREW
2. LOCK WASHER
3. FLAT WASHER
4. TERMINAL BOARD
5. WIRE ASSEMBLY
6. INSULATOR
7. LIMIT SWITCH
8. SWITCH GASKET
9. MACHINE SCREW
10. CABLE STRAP
11. COIL (IGNITION)
12. IGNITION ASSEMBLY
13. HIGH TENSION LEAD
14. MACHINE SCREW
15. ADAPTER
16. TUBE (COMBUSTION AIR SWITCH)
17. SPARK PLUG
18. ELBOW
19. COMBUSTION AIR SWITCH
20. NUT
21. SHROUD
22. GASKET
23. COMBUSTION TUBE AND JACKET ASSEMBLY
24. HEAD GASKET
25. SPRAY NOZZLE
26. MACHINE SCREW
27. COMBUSTION HEAD ASSEMBLY
28. SOLENOID ASSEMBLY
29. GASKET
30. MACHINE SCREW
31. FUEL FEED, NOZZLE HOLDER
32. LOCK WASHER
33. MACHINE SCREW

Figure 13-18. Heater Assembly Exploded View (62D33-1 and 62D33-2)

i. Remove six screws (36) with lock washers (37) that attach the combustion head assembly (38) to the combustion tube and jacket assembly (30) and lift out of combustion tube. Do not disassemble the head plate (34) from the head (33) unless there is damage to one of the parts.

j. Remove the screw (39), lock washer (40), cover (41) and preformed packing (42). Then carefully slide the solenoid coil (43) off the valve assembly (45). It is not necessary to remove the base plate (44) unless it is warped.

k. Remove the two screws (1), lock washers (2), flat washers (3), and lift out the limit switch (7) and gasket (8).

l. To remove the terminal board (4) and insulator (6) from the combustion tube and jacket assembly (30), remove the four screws (61) and lock washers (60).

m. Disconnect the combustion air switch tube (17) from the elbow (19) on the combustion air switch (20) and remove the combustion air switch from the combustion air inlet tube.

13-64. DISASSEMBLY OF HEATER. (62D33-1 and 62D33-2) (Refer to Figure 13-18.) Disassemble the heater in the general sequence of the index numbers in Figure 13-18. Pay special attention to the following instructions:

NOTE

Label all wires prior to removal, so they can be replaced properly at reassembly.

a. Remove the machine screw (14) to remove the adapter (15) from the combustion air inlet tube.

b. Disconnect and remove electrical wiring and individual wires from the various components on the heater. It is advisable to remove wire harness assembly intact.

c. Carefully disconnect the high voltage ignition lead at the spark plug. Handle the spring connector on the end of this lead with care to prevent fouling or damage.

d. Remove the spark plug (17) using a 7/8 inch deep socket. Make sure the spark plug gasket is removed.

e. Remove the four screws (9) and cable straps (10) to free the ignition assembly (12) from the combustion tube and jacket assembly (23). (Refer to Paragraph 13-52 for ignition unit inspection.)

f. Remove the solenoid, elbow fitting and nut. This will free the shroud, gasket and washer.

g. Remove the two screws (30). Carefully take the fuel feed and nozzle holder assembly off the combustion head. Handle this assembly carefully to avoid damaging the nozzle (25). Also, remove the gasket (29).

h. Carefully unscrew and remove the spray nozzle (25) from the fuel feed and nozzle holder assembly (31).

CAUTION

Handle the nozzle with care to avoid damage to the tip. The material around the orifice is very thin, and any blow on the face of the nozzle can distort the spray pattern or effect the burning rate. This, in turn, can cause malignition or improper combustion.

i. Remove six screws (26) that attach the combustion head assembly (27) to the combustion tube and jacket assembly (23) and lift out of combustion tube.

j. Remove the two screws (1) and lift out the limit switch (7) and gaskets (8).

k. To remove the terminal board (4) and insulator (6) from the combustion tube and jacket assembly (23), remove the two screws (33).

l. Disconnect the combustion air switch tube (16) from the elbow (18) on the combustion air switch (19) and remove the combustion air switch from the combustion air inlet tube.

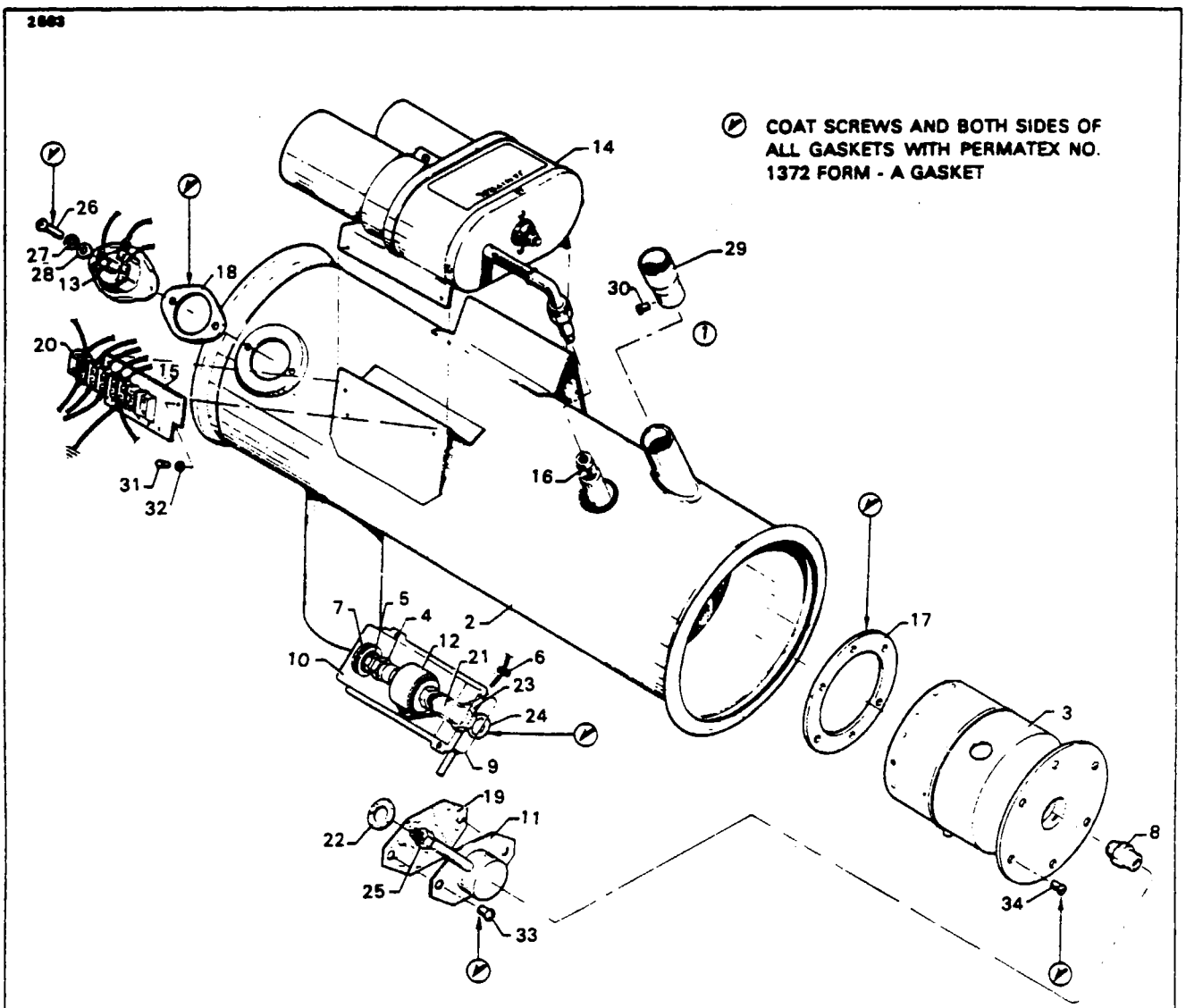

1 HEATER ASSEMBLY
2. COMBUSTION TUBE AND JACKET ASSEMBLY
3. COMBUSTION HEAD ASSEMBLY
4. BUSHING
5. NIPPLE
6. GROMMET
7 GROMMET
8. SPRAY NOZZLE
9 BOX ASSEMBLY - FUEL SHROUD, LOWER
10. BOX ASSEMBLY - FUEL SHROUD, UPPER
11. FUEL FEED NOZZLE HOLDER
12. SOLENOID ASSEMBLY
13. LIMIT SWITCH
14. IGNITION ASSEMBLY
15. INSULATOR
16. SPARK PLUG
17. HEAD GASKET
18. SWITCH GASKET
19. VALVE BODY GASKET
20. TERMINAL STRIP
21. ELBOW
22. GASKET
23. NUT
24. WASHER
25 NUT
26. MACHINE SCREW
27 LOCK WASHER
28. FLAT WASHER
29. ADAPTER
30. MACHINE SCREW
31. MACHINE SCREW
32. LOCK WASHER
33. MACHINE SCREW
34. MACHINE SCREW

Figure 13-19. Heater Assembly Exploded View (10E21-1)

13-65. DISASSEMBLY OF HEATER. (10E21-1) (Refer to Figure 13-19.) Disassemble the heater in the general sequence of the index numbers in Figure 13-19. Pay special attention to the following instructions:

NOTE

Label all wires prior to removal so they can be replaced properly at reassembly.

a. Remove the machine screw (30) to remove the adapter (29) from the combustion air inlet tube.

b. Disconnect and remove electrical wiring and individual wires from the various components on the heater. It is advisable to remove wire harness assembly intact.

c. Carefully disconnect the high voltage ignition lead at the spark plug. Handle the spring connector on the end of this lead with care to prevent fouling or damage.

d. Remove the spark plug (16) using a 7/8 inch deep socket. Make sure the spark plug gasket is removed.

e. Remove the screws (31) to free the ignition assembly (14) from the combustion tube and jacket assembly (2). (Refer to Paragraph 13-52 for ignition unit inspection.)

f. Remove the solenoid, elbow fitting and nut. This will free the shroud, gasket and washer.

g. Remove the two screws (33). Carefully take the fuel feed and nozzle holder assembly off the combustion head. Handle this assembly carefully to avoid damaging the nozzle (8). Also, remove the gaskets (19 and 22).

h. Carefully unscrew and remove the spray nozzle (8) from the fuel feed and nozzle holder assembly (11).

CAUTION

Handle the nozzle with care to avoid damage to the tip. The material around the orifice is very thin, and any blow on the face of the nozzle can distort the spray pattern or effect the burning rate. This, in turn, can cause malignition or improper combustion.

i. Remove six screws (34) that attach the combustion head assembly (3) to the combustion tube and jacket assembly (2) and lift out of combustion tube.

j. Remove the two screws (26) and lift out the limit switch (13) and gasket (18).

k. To remove the terminal board (20) and insulator (15) from the combustion tube and jacket assembly (2), remove the screws (31).

13-66. DISASSEMBLY OF HEATER. (10E21-2) (Refer to Figure 13-20.) Disassemble the heater in the general sequence of the index numbers in Figure 13-20. Pay special attention to the following instructions:

NOTE

Label all wires prior to removal so they can be replaced properly at reassembly.

a. Remove the machine screw (24) to remove the adapter (25) from the combustion air inlet tube.

b. Disconnect and remove electrical wiring and individual wires from the various components on the heater. It is advisable to remove wire harness assembly intact.

c. Carefully disconnect the high voltage ignition lead at the spark plug. Handle the spring connector on the end of this lead with care to prevent fouling or damage.

d. Remove the spark plug (34) using a ⅞ inch deep socket. Make sure the spark plug gasket is removed.

e. Remove the screws (22) to free the ignition assembly (31) from the combustion tube and jacket assembly (2). (Refer to Paragraph 13-52 for ignition unit inspection.)

f. To remove the fuel feed nozzle and solenoid assembly from the heater assembly, proceed as follows:

1. Remove the lower clamp from fuel shroud and slide the upper part of the fuel shroud along the fuel line.
2. Disconnect the fuel line from the fuel filters (5).
3. Disconnect the drain tube from the lower fuel shroud.
4. Remove the fuel filter assembly (5).
5. Remove the lower fuel shroud assembly (6.) Make sure the fuel shroud gasket (6a) is removed.
6. Ascertain that all electrical wiring is disconnected.
7. Remove the cap screws (7) from the access cover (8) and lift the cover and gasket from the heater jacket.
8. Disconnect solenoid wire from electrical connector on cover.
9. Remove safety wire from fuel feed, nozzle holder and solenoid assembly.
10. Loosen the knurled nut (18) that secures the fuel feed, nozzle holder and solenoid assembly to the combustion head (3) using a spanner wrench, Janitrol Part number 18E17-1.

NOTE

Hold fuel tube assembly while loosening the nut, to prevent damage to the assembly. This assembly is indexed to head ring; DO NOT ROTATE.

11. Remove the screw (12) that secures the cover (14), O-ring (15) and coil (16) to the Fuel Feed assembly. Then carefully slide the solenoid coil from the valve assembly. It is not necessary to remove the base plate (17) unless it is warped.
12. Remove O-ring (19) from face of fuel feed assembly.
13. Remove spray nozzle (10) using care not to bend or distort fuel tube.

g. Remove six screws (33) that attach the combustion head assembly (3) to the combustion tube and jacket assembly (2) and lift out of combustion tube.

h. Remove the two screws (26) and lift out the limit switch (29) and gasket (30).

i. To remove the terminal board (20) and insulator (21) from the combustion tube and jacket assembly (2), remove the screws (22).

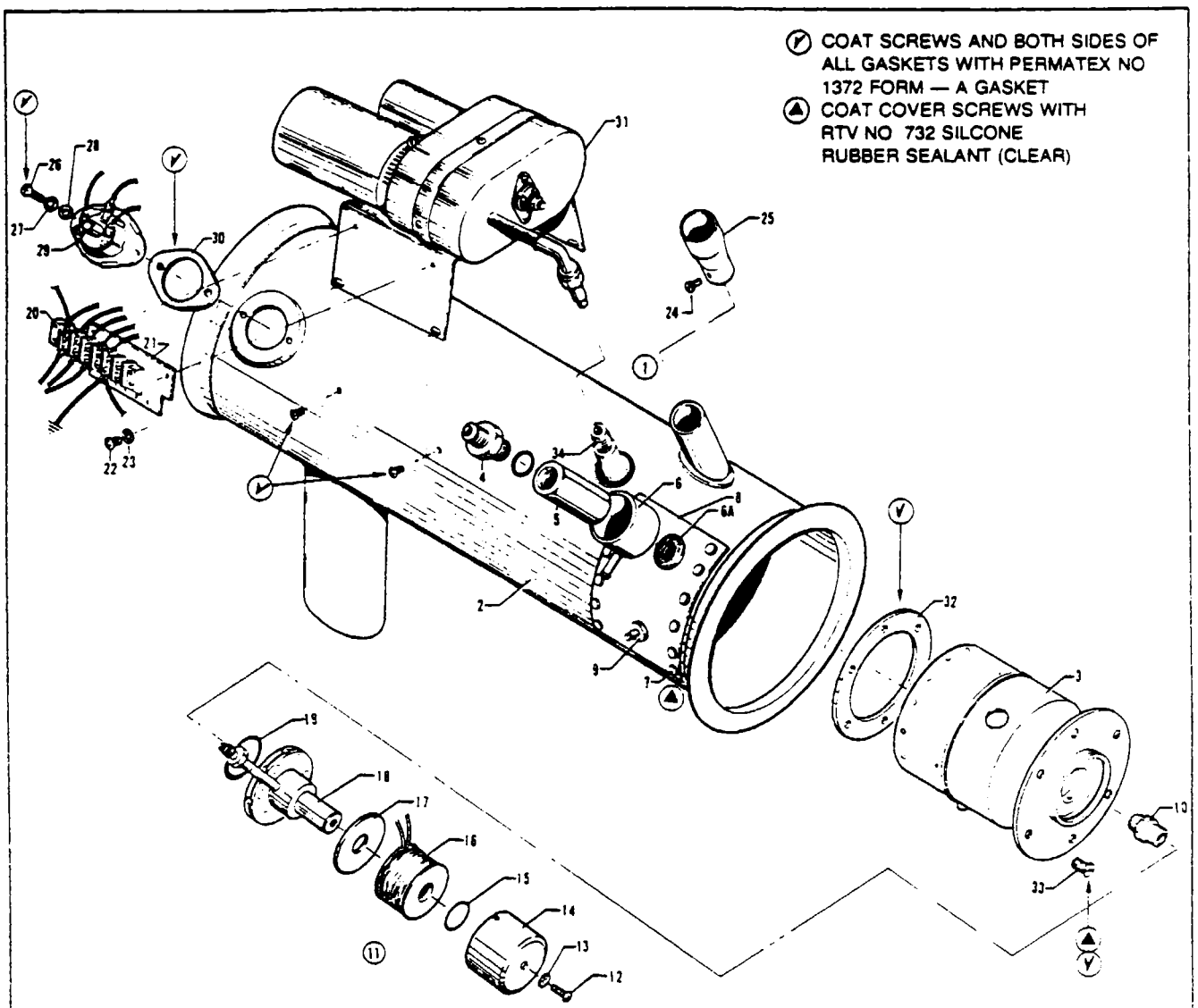

1 HEATER ASSEMBLY
2 COMBUSTION TUBE AND JACKET ASSEMBLY
3 COMBUSTION HEAD ASSEMBLY
4 FITTING
5 FILTER
6. SHROUD ASSEMBLY
6a. GASKET
7 CAP SCREWS
8 COVER AND GASKET
9 TERMINAL
10 SPRAY NOZZLE
11 FUEL FEED, NOZZLE HOLDER AND SOLENOID VALVE ASSEMBLY
12 MACHINE SCREW
13 FLAT WASHER
14 SHELL COVER
15. O-RING
16 SOLENOID ASSEMBLY
17. BASE PLATE
18 KNURLED NUT
19 O-RING
20. TERMINAL STRIP
21. INSULATOR
22 MACHINE SCREW
23 LOCK WASHER
24 MACHINE SCREW
25. ADAPTER
26 MACHINE SCREW
27 LOCK WASHER
28 FLAT WASHER
29 LIMIT SWITCH
30 SWITCH GASKET
31 IGNITION ASSEMBLY
32 HEAD GASKET
33 MACHINE SCREW
34 SPARK PLUG

Figure 13-20. Heater Assembly Exploded View (10E21-2)

13-67. CLEANING OF COMBUSTION TUBE AND JACKET ASSEMBLY.

a. The inside of the combustion chamber and radiator can be cleaned by filling it with Oakite M-3 Stripper Solution and allowing it to soak overnight. This will require closing the combustion air, exhaust and drain openings with tight-fitting metal caps to retain the Oakite Solution. The solution is made by mixing one pound of Oakite with each gallon of water used, and should be maintained at 190 degrees Fahrenheit to 210 degrees Fahrenheit during the soaking period. Be sure to rinse the heater thoroughly with water after soaking.

CAUTION

Do not submerge the combustion chamber, radiator and jacket assembly in the Oakite solution, as this will destroy the non-removable gasket at the exhaust outlet opening in the jacket.

b. A sandblast cleaner or a stainless steel brush may also be used to clean the inside of the combustion chamber. After sandblasting or brushing, be sure to remove all sand or loosened foreign material.

CAUTION

Do not use an ordinary steel brush, as it may cause corrosion.

c. Wipe the outside of the jacket with a cloth dampened in dry-cleaning solvent and follow up with a clean, dry cloth.

13-68. INSPECTION OF COMBUSTION CHAMBER AND JACKET.

a. Since the outer jacket is not removable, inspection of the combustion chamber is limited. Minor cracks or pinholes can be detected in the leakage test outlined in Paragraph 13-71. The following information should be useful in attempting to evaluate a damaged combustion chamber.

b. Damage to the combustion chamber and radiator can be classified as soft and spongy metal as a result of overheating, deformation as a result of overheating or backfiring, fatigue cracks and pinholes.

NOTE

A heater showing damage due to overheating has been operating in a system where some control is not functioning correctly. Be sure to check all components of the heating system before placing the heater back into service.

c. Soft and spongy metal can be detected by tapping lightly with a ball-peen hammer on the downstream end of the combustion tube. Soft spots will produce a dull sound in contrast to the solid ringing response obtained when tapping on live metal. If soft spots are found, the combustion chamber and jacket assembly should be replaced.

d. Deformation as a result of backfiring usually will distort the wall of the radiator near the crossover passages. This will be accompanied by evidence of extreme oxidation and is sufficient reason for replacement of the assembly.

13-69. INSPECTION OF REMAINING COMPONENTS.

a. Discard all rubber parts such as grommets, gaskets and O-rings. Always replace these items at overhaul.

b. Inspect all wires for damaged terminals and for chafed, cracked or otherwise damaged insulation. Individual wires can be replaced by making them up from No. 16 AWG stock, cut to correct length, with terminals installed by means of an acceptable crimping tool. Do not use solder for heater wiring connections.

c. If heater controls were operating correctly prior to overhaul, reinstall them.

d. Inspect all hardware parts such as bolts, screws, nuts, washers and lock washers. Replace damaged parts.

e. Inspect the terminal board for signs of damage, such as distortion or cracks. Replace if either exists.

f. Inspect the spray nozzle with a magnifying glass. The nozzle can be disassembled for cleaning. Remove the screen and wash in cleaning solvent if dirt is found on the screen. Look for any obstructions in the nozzle orifice and any sign of damage to the slight conical protrusion at the nozzle tip. There should be no evidence of any metal object having come into contact with it. Use compressed air to remove obstructions and re-examine to be sure the orifice is open. Do not under any circumstances press or rap on the tip face. After cleaning, store the nozzle in a polyethylene bag until ready for reassembly. If there is any sign of damage or distortion, replace the nozzle.

g. (62D33) Inspect the fuel feed, nozzle holder, and solenoid valve assembly for damaged threads at the fuel line fitting, and for a crimped or cracked fuel line or distorted housing. Check the solenoid for continuity by reading the resistance across the two leads with an ohmmeter. A reading of 75 to 85 ohms at room temperature is normal. If the reading is not between these limits, or if the solenoid windings show signs of physical damage or overheating, replace it. Replace preformed packing.

h. (62D33-1, 62D33-2, 10E21-1 and 10E21-2) Inspect the fuel feed and nozzle holder assembly for damaged threads at the fuel line fitting and for a crimped or cracked fuel line or distorted housing. Check the fuel solenoid for continuity by reading the resistance across the two leads with an ohmmeter. A reading of 100 to 125 ohms at room temperature is normal. If the reading is not between these limits, replace solenoid

i. The combustion air pressure switch must respond to delicate pressure changes and should always be checked and/or replaced at overhaul. (Refer to Paragraph 13-75 and Figure 13-22.)

13-70. TESTING.

13-71. COMBUSTION TUBE AND JACKET ASSEMBLY. Test the combustion tube for leaks as follows:

a. Fashion a sealing plate from approximately .125 inch thick flat stock to seal the opening in the combustion tube assembly. (See Figure 13-21) Use a rubber gasket under the plate and attach the plate with six screws.

b. Make up seals for all remaining openings, except the one used to connect the air pressure source. (See Figure 13-21.) Use rubber stoppers as shown. The combustion air inlet tube can be sealed best with a drilled stopper and clamp. Other openings should be sealed with expansion plugs. The seal used in the exhaust tube should be formed so that it will not deform the air pressure switch tube which protrudes into the exhaust.

c. See that all openings except the combustion air pressure switch connection are plugged. This is the most convenient connection for attaching the test air pressure source on earlier models. On later models the combustion head opening can be used if the cover plate is modified so that the air pressure supply can be connected to it.

d. Connect a regulated air pressure supply to the opening that has not been plugged. Apply a pressure of three to five psi to the combustion tube.

e Submerge the assembly in water for several minutes while watching for bubbles that would indicate leaks. Turn the combustion tube in the water so that any entrapped bubbles will be freed. Bubbles will indicate leaks No air leakage is permitted from the combustion tube assembly. No weld or braze repairs are permitted on a combustion tube assembly.

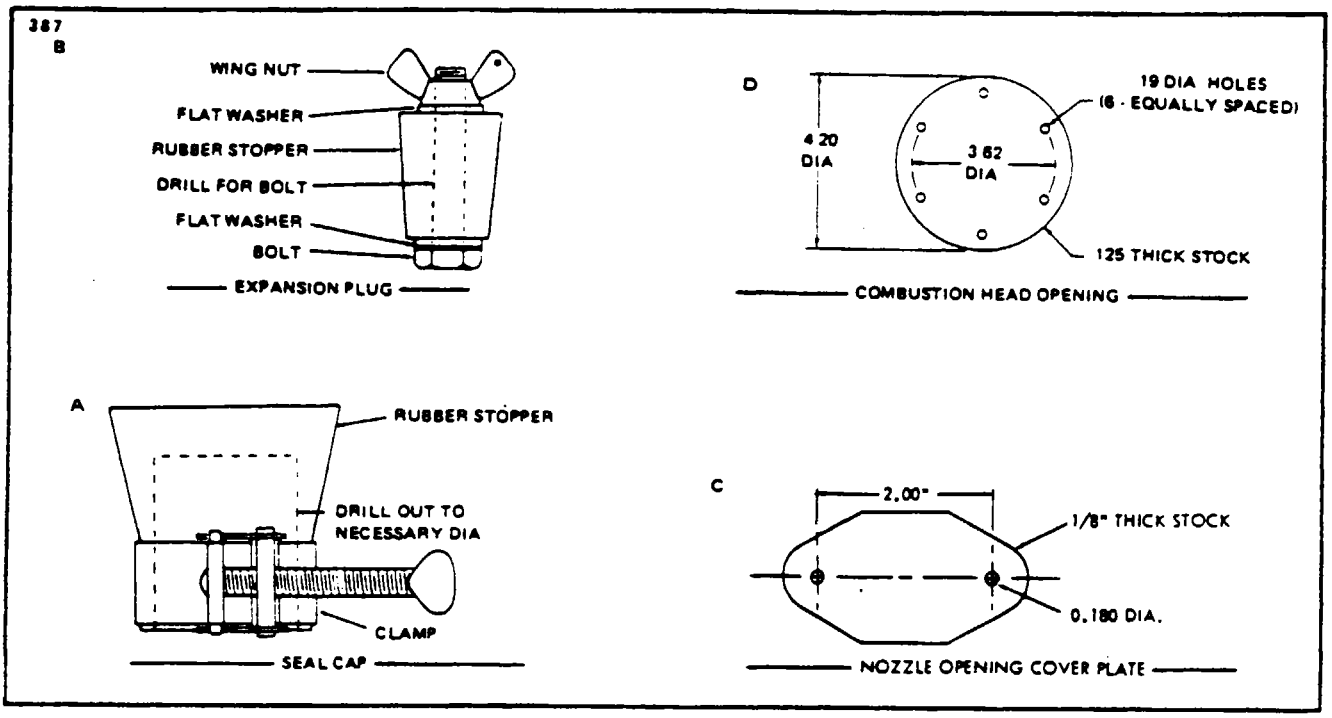

Figure 13-21. Seal Plate, Plugs and Caps for Combustion Tube Leakage Test

13-72. FUEL FEED AND NOZZLE HOLDER ASSEMBLY. Test the fuel feed and nozzle holder assembly as follows.

a. Using filtered compressed air, apply 20 psi to drain port, located on the surface of the valve assembly near the threaded nozzle cavity.

b. Immerse the assembly in clean water, with the fuel inlet and the nozzle cavity left open.

c. Observe for air bubbles, which would indicate leakage. If bubbles appear at either the nozzle cavity or fuel inlet, there is a leak in the fuel tube. If bubbles appear externally at either end of the shroud tube, the shroud tube is leaking.

d. In either of the above cases, the complete fuel feed and nozzle holder assembly must be replaced.

e. If no leaks are found, dry the assembly carefully with compressed air.

13-73. NOZZLE SPRAY TEST. Spray test the nozzle as follows:

a. Install the nozzle in the fuel feed and nozzle holder assembly as described in Paragraph 13-77, 13-78 or 13-79, and connect the fuel tube and solenoid valve to a source of fuel capable of delivering the fuel at 100 psi.

b. Connect the solenoid leads to a 24-volt battery, with a switch in one of the leads to open and close the solenoid when desired.

c. With the solenoid energized and the fuel line connected, observe the spray pattern. It should be conical in shape, with even dispersion in all directions.

WARNING

To avoid the danger of fire, use Stoddard solvent and be sure to keep the atomized spray away from flame.

d. Energize and de-energize the solenoid several times The spray should shut off completely each time the solenoid is de-energized. There should be no sign of dribbling at the nozzle tip in excess of one or two drops.

e If the spray pattern is distorted, check for an obstruction and clean the nozzle as described in Paragraph 13-69 If this fails to provide a normal spray pattern, replace the nozzle.

f. If the nozzle continues to dribble, the solenoid valve is not closing properly. Replace the solenoid valve.

13-74. REPAIR OF COMBUSTION TUBE. No weld or braze repairs of the combustion tube assembly are authorized

13-75. TESTING COMBUSTION AIR PRESSURE SWITCH. (Refer to Figure 13-22.)

a. Connect an adjustable air pressure line that can be controlled in a range of zero to 5.0 inches of water, to the switch opening with a water manometer and needle valve in the line ahead of the switch Switch must be tested in the same position as installed in the airplane.

b. Connect an ohmmeter across the switch terminals to determine the exact instant of switch closing

c Apply air pressure, slowly allowing it to build up from zero. The switch contacts should close at 0.5 ± .1 inches of water which will be indicated on the manometer.

NOTE

The switch has a differential pressure tap, and this opening must be left open to atmosphere during the test

d. Make several trials to insure switch reliability. Be sure to increase and decrease the air pressure slowly in order to produce accurate indications

e. If an adjustment is required, rotate the adjusting screw clockwise to increase and counterclockwise to decrease settings

THIS SPACE INTENTIONALLY LEFT BLANK

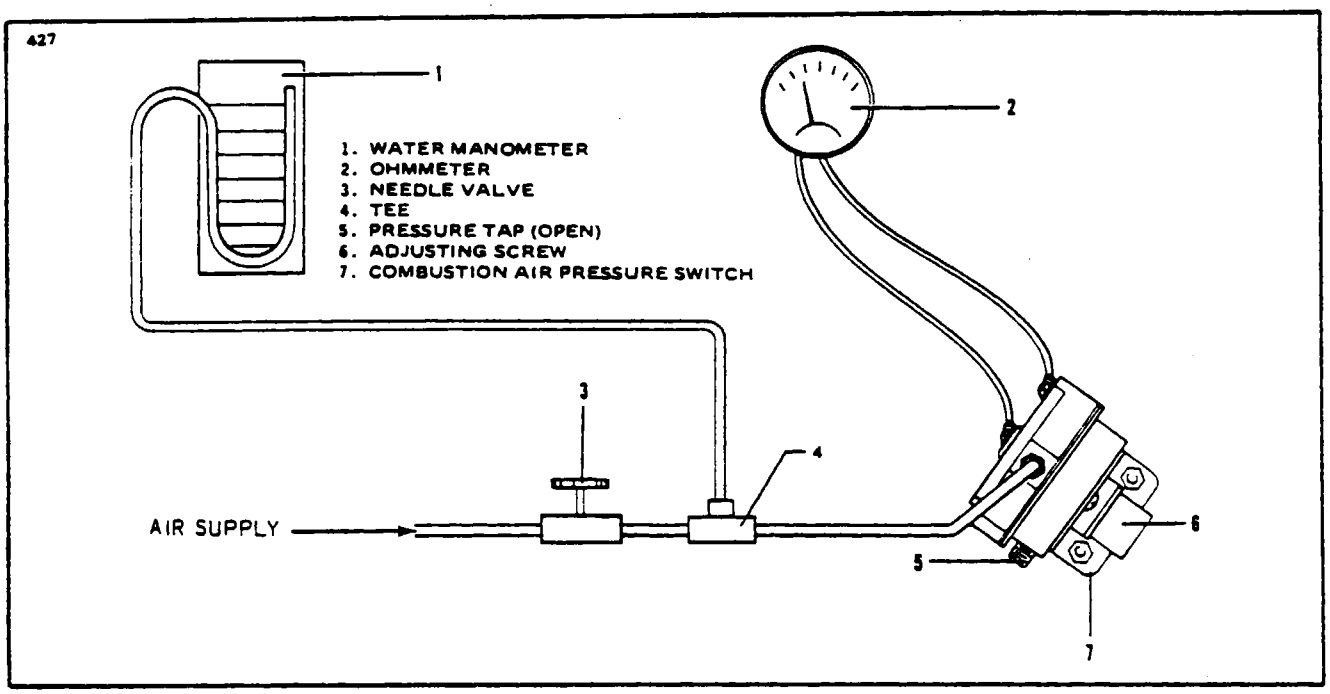

Figure 13-22. Test Setup - Combustion Air Pressure Switch

13-76. RECIRCULATING FAN AND COMBUSTION AIR BLOWER TEST. The following tests should be performed as outlined in the succeeding paragraphs:

a. Check recirculating air and combustion air motors for correct RPM and current drain.

b. Connect either motor to a 24-volt DC power supply. Rotation should be counterclockwise when viewed from the shaft end.

c. The combustion air blower motor should rotate at approximately 7500 RPM at rated voltage. Current drain is approximately three amperes.

d. The recirculating fan motor should rotate at approximately 11,300 RPM at rated voltage. Current drain is approximately 12.5 amperes.

e. If current drain is excessive, or if speed is too low, replace the brushes. Recheck both current drain and RPM after brushes are properly run in. (Refer to Paragraph 13-40.)

f. If after replacing brushes operation is still unsatisfactory, replace the motor.

NOTE

The motor checks described above for the combustion air motor should be made without the blower housing attached.

13-77. REASSEMBLY OF HEATER (62D33). (Refer to Figure 13-17.) When reassembling the heater, use all new gaskets, seals and O-rings.

a. Reconnect the combustion air switch (20) to the combustion air inlet tube extending from the jacket assembly (30). Install the elbow (19) to the switch and connect the combustion air switch tube (17).

b. Install the terminal board (4) and insulator (6) on the combustion tube and jacket assembly (30) with four screws (61) and lock washers (60).

c. Install the limit switch (7) and gasket (8) to the jacket assembly and secure with flat washers (3), lock washers (2) and screws (1).

d. Assemble the fuel feed, nozzle holder, and solenoid valve assembly (54) by carefully sliding the solenoid coil (43) onto the valve assembly (45) and installing a new preformed packing (42), cover (41), lock washer (40), and securing the complete assembly with a machine screw (39).

e. Install the combustion head assembly (38) into the combustion tube and jacket assembly (30) being certain to align the spark plug holes. Secure the combustion head assembly (38) to the jacket with six lock washers (37) and machine screws (36). Refer to "Note" on Figure 13-17. Leave the screws (36) loose at this time.

f. Install the spark plug (18) by screwing it into the threaded opening, making sure that the spark plug gasket is in position. Tighten to a torque of 28 foot-pounds, using a ⅞ inch deep socket wrench. Then tighten the six screws (36).

g. If the valve assembly (45) was disassembled, reassemble as follows: Holding the plunger (47) upright, insert the spring (46). Install the valve body down over the plunger and spring. Turn this assembly upright and install the seat (48) and preformed packing (49).

h. Remove the spray nozzle (35) from the polyethylene. Screw the nozzle into the nozzle holder and tighten to 75 to 100 inch-pounds. It is very important to torque the nozzle to this value, as incorrect tightening could cause improper heater operation and "drool." Overtorque can cause nozzle core to become loose.

CAUTION

The spray nozzle is susceptible to damage, if the face is contacted by any object which would alter the original contour of the face. If this happens, the nozzle must be replaced.

i. Install the fuel feed, nozzle holder, and solenoid valve assembly (54) into the heater. Center the fuel inlet fitting in the hole in the jacket. Place the fuel fitting shroud gasket (25) and the shroud (24) on the fuel fitting and install the gasket (23) and nut (22) finger tight.

j. Connect the solenoid ground wire under one of the attaching screws (53). Tighten the two machine screws (53) and the nut (22) with a 3/4 inch deep socket and install the fitting (21).

k. Install the ignition assembly (13) on the heater with four lock washers (10) and screws (9); also install the cable straps (11).

l. Remove the spark plug (18) and adjust the spark gap in accordance with instructions given in Paragraph 13-44, c.

m. Complete the assembly, being sure to install the wiring in the same locations and connected to the same terminals as before disassembly. Also, slide the adapter (16) onto the combustion air inlet tube and secure with machine screw (15).

13-78. REASSEMBLY OF HEATER. (62D33-1 and 62D33-2) (Refer to Figure 13-18.) When reassembling the heater, use all new gaskets, seals and O-rings.

a. Reconnect the combustion air switch (19) to the combustion air inlet tube extending from the jacket assembly (23). Install the elbow (18) to the switch and connect the combustion air switch tube (16).

b. Install the terminal board (4) and insulator (6) on the combustion tube and jacket assembly (23) with two screws (33).

c. Install the limit switch (7) and gaskets (8) to the jacket assembly and secure with screws (1).

d. Install the combustion head assembly (27) into the combustion tube and jacket assembly (23) being certain to align the spark plug holes. Secure the combustion head assembly (27) to the jacket with six machine screws (26). Refer to "Note" on Figure 13-18. Leave the screws (26) loose at this time.

e. Install the spark plug (17) by screwing it into the threaded opening, making sure that the spark plug gasket is in position. Tighten to a torque of 28 foot-pounds, using a ⅞ inch deep socket wrench. Then tighten the six screws (26).

f. Remove the spray nozzle (25) from the polyethylene. Screw the nozzle into the nozzle holder and tighten to 75 to 100 inch-pounds. It is very important to torque the nozzle to this value, as incorrect tightening could cause improper heater operation and "drool." Overtorque can cause nozzle core to become loose.

CAUTION

The spray nozzle is susceptible to damage, if the face is contacted by any object which would alter the original contour of the face. If this happens, the nozzle must be replaced.

g. Install the fuel feed and nozzle holder assembly (31) into the heater with two screws. Center the fuel inlet fitting in the hole in the jacket. Place the fuel fitting shroud gasket (22) and the shroud (21) on the fuel fitting and install the washer and nut (20) finger tight. Insert a 3/4 inch open end wrench inside the jacket and hold the fuel tube fitting while tightening the nut.

h. Tighten the nut (20) with a 3/4 inch deep socket and install the elbow fitting

i. Install solenoid, carefully pull solenoid lead wires through hole in shroud and install grommet.

j. Install the ignition assembly (12) on the heater with two screws (9); also install the cable straps (10).

k. Remove the spark plug (17) and adjust the spark gap in accordance with instructions given in Paragraph 13-44, c.

l. Complete the assembly, being sure to install the wiring in the same locations and connected to the same terminals as before disassembly. Also, slide the adapter onto the combustion air inlet tube and secure with machine screw

13-79. REASSEMBLY OF HEATER. (10E21-1) (Refer to Figure 13-19.) ehen reassembling the heater, use all new gaskets, seals, and O-rings.

a. Install the terminal board (20) and insulator (15) on the combustion tube and jacket assembly (2) with screws (31).

b. Install the limit switch (13) and gasket (18) to the jacket assembly and secure with screws (26).

c. Install the combustion head assembly (3) into the combustion tube and jacket assembly (2) being certain to align the spark plug holes. Secure the combustion head assembly (3) to the jacket with six machine screws (34). Refer to "Note" on Figure 13-19. Leave the screws (34) loose at this time.

d. Install the spark plug (16) by screwing it into the threaded opening, making sure that the spark plug gasket is in position. Tighten to a torque of 28 foot-pounds, using a ⅞ inch deep socket wrench. Then tighten the six screws (34).

e Remove the spray nozzle (8) from the polyethylene. Screw the nozzle into the nozzle holder and tighten to 75 to 100 inch-pounds. It is very important to torque the nozzle to this value, as incorrect tightening could cause improper heater operation and "drool." Overtorque can cause nozzle core to become loose

CAUTION

The spray nozzle is susceptible to damage if the face is contacted by any object which would alter the original contour of the face. If this happens, the nozzle must be replaced.

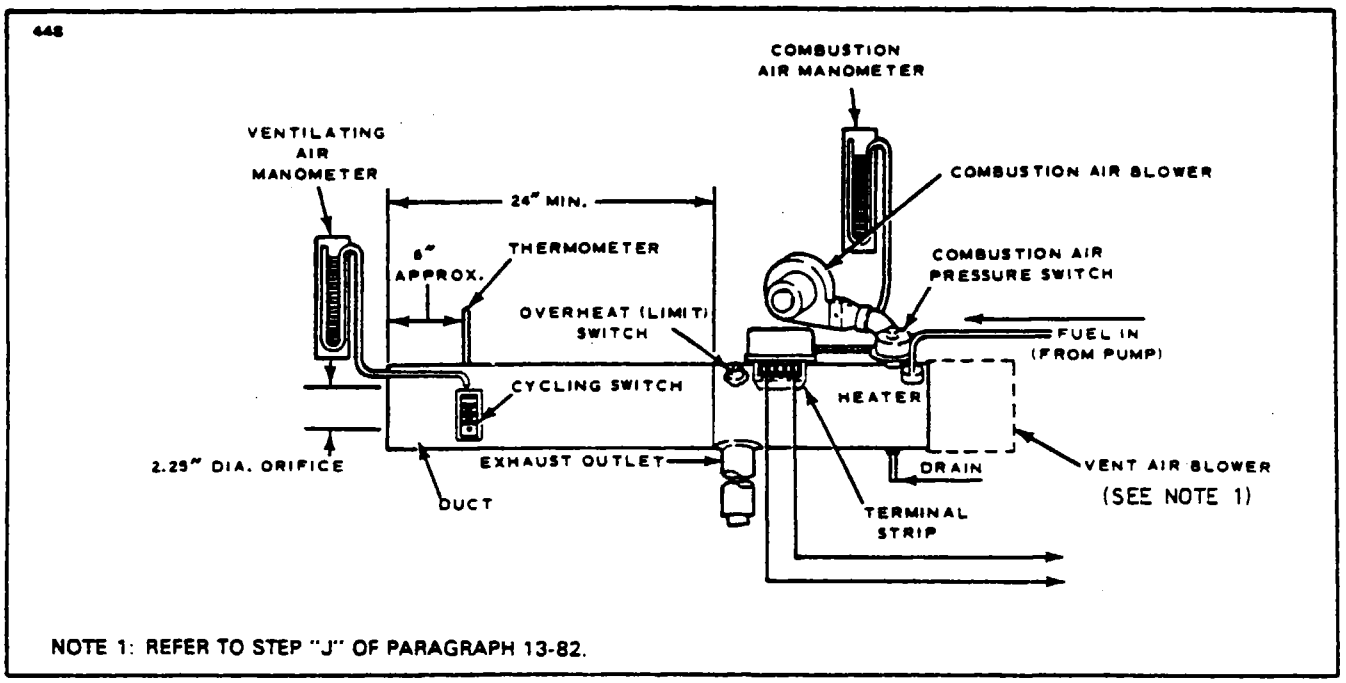

Figure 13-23. Suggested Setup for Heater Operation Test

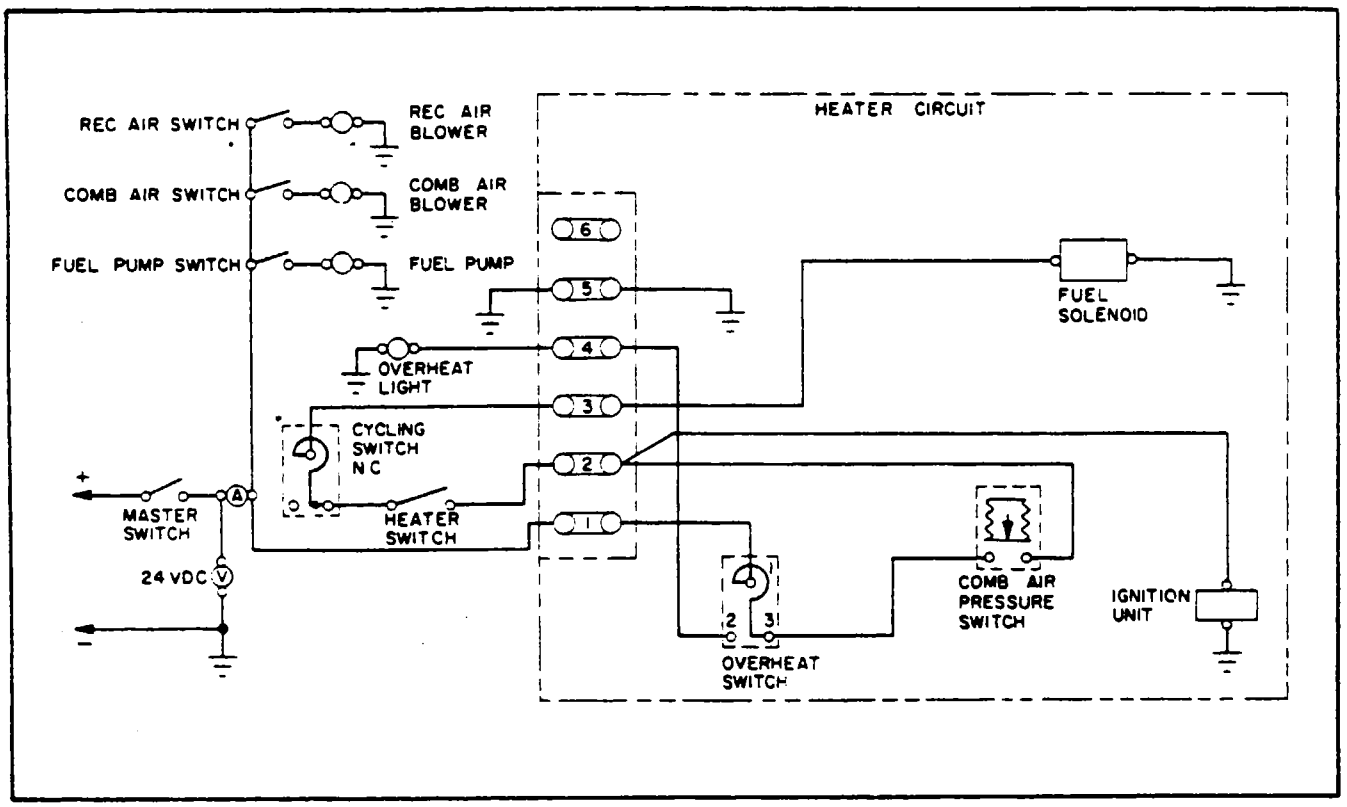

Figure 13-24. Suggested Wiring Connections for Heater Operation Test

f. Install the fuel feed and nozzle holder assembly (11) into the heater with two screws. Center the fuel inlet fitting in the hole in the jacket. Place the fuel fitting shroud gasket and the shroud on the fuel fitting and install the washer and nut (23) finger tight. Insert a 3/4 inch open end wrench inside the jacket and hold the fuel tube fitting while tightening the nut.

g. Tighten the nut (23) with a 3/4 inch deep socket and install the elbow fitting.

h. Install solenoid, carefully pull solenoid lead wires through hole in shroud and install grommet.

i. Install the ignition assembly (14) on the heater with screws (31).

j. Remove the spark plug (16) and check to see if spark plug is within the limitations in accordance with instructions given in Paragraph 13-45.

k. Complete the assembly, being sure to install the wiring in the same locations and connected to the same terminals as before disassembly. Also, slide the adapter onto the combustion air inlet tube and secure with machine screw.

13-80. REASSEMBLY OF HEATER. (10E21-2) (Refer to Figure 13-20.) When reassembling the heater use all new gaskets, seals and O-rings.

a. Install the terminal board (20) and insulator (21) on the combustion tube and jacket assembly (2) with screws (22).

b. Install the limit switch (29) and gasket (30) to the jacket assembly (2) with screws (26).

c. Install the combustion head assembly (3) into the combustion tube and jacket assembly (2) being certain to align the spark plug holes. Secure the combustion head assembly (3) to the jacket with six machine screws (33). Refer to "Note" on Figure 13-20. Leave the screws (33) loose at this time.

d. Install the spark plug (34) by screwing it into the threaded opening, making sure that the spark plug gasket is in position. Tighten to a torque of 28 foot-pounds, using a ⅞ inch deep socket wrench. Then tighten the six screws (33).

e. To reassemble the fuel feed, nozzle holder and solenoid to the heater assembly proceed as follows.

NOTE

The fuel feed, nozzle holder and solenoid assembly is to be cleaned and an operational test performed before being reassembled to heater.

CAUTION

The spray nozzle is susceptible to damage if the face is contacted by any object which would alter the original contour of the face. If this happens, the nozzle must be replaced.

1. Install new or clean spray nozzle (10) into the nozzle holder and torque to 70 to 100 inch-pounds. It is very important to torque the nozzle to this value, as incorrect tightening could cause improper heater operation and "drool". Overtorque can cause nozzle core to become loose.

2. Install new O-ring (19) on face of fuel feed assembly.

3. Thru the heater opening install fuel feed assembly (11) with coil (16), O-ring (15), cover (14), washer (13) and machine screw (12).

4. Place fuel feed, nozzle holder and solenoid valve assembly (11) in position with index pin in slot in head ring and tighten nut using spanner wrench, Janitrol Part Number 18E17-1.

5. Safety wire nozzle holder nut to fuel inlet fitting.

6. Connect solenoid wire to electrical connector (9) on cover (8).

7. Install cover and new gasket (8) to jacket and secure with cap screws (7). Use a small amount of RTV No. 732 silicone rubber sealant (clear) or equivalent sealant on the threads of these screws and both sides of gasket.

8. Install gasket (6A) and shroud assembly (6).
9. Install new fuel filter (5) and insure O-rings are in proper position.

NOTE

Fuel filter should be torqued sufficient to seal gasket joint at the jacket and fuel fitting joint.

10. Connect fuel supply tube to filter inlet fitting (4).
11. Position fuel shroud assembly (6) and install clamp. Also attach the drain tube to the shroud assembly (6).

f. Install the ignition assembly (31) on the heater with screws (22).
g. Remove the spark plug (34) and check to see if spark plug is within the limitations in accordance with instructions given in Paragraph 13-45.
h. Complete the assembly being sure to install the wiring in the same locations and connected to the same terminals as before disassembly. Also, slide the adapter (25) onto the combustion air inlet tube and secure with machine screw (24).

13-81. TEST PROCEDURE.

13-82. GENERAL INFORMATION. A test of all components should have been made after overhaul to insure proper operation. Some shops may not have complete testing facilities for measuring airflow, pressure drops, and other factors which would be accomplished in a laboratory type test. If such a test cannot be made, install the heater and check operation on the ground and in the air to determine if operation is normal. In shops where complete test equipment is available and a complete functional test can be performed, the test routine described in subsequent paragraphs should be made.

13-83. EQUIPMENT REQUIRED. (See Figure 13-23.)

a. An improvised stand to hold the heater during test. The heater should be located far enough away from any combustible material or atmosphere to avoid hazard. A location should be chosen where exhaust can be dispelled. Do not add an excessive extension to the heater exhaust.
b. A source of fuel capable of being regulated from 0 to 100 psi.
c. The combustion air blower to be used with the heater should be used for the test.
d. A 24-volt DC power supply, with a rheostat, ammeter, and voltmeter in the line to control and indicate the current drain and voltage output.
e. Two water manometers (zero to 5.0 inch water column) for measuring the pressure in the ventilating air duct and in the combustion air stream.
f. A piece of duct to be attached to the downstream end of the heater. It should have a minimum length of 24 inches and the same diameter as the heater being tested. A 2.25 inch diameter orifice should be centrally located at the outlet end. An aperture should be provided for the thermometer, and the cycling switch that is used with the heater (see Paragraph 13-53, a), and a static tap should be attached as shown in Figure 13-23.
g. A thermometer with 500°F scale.
h. A fuel-pressure gauge 0 to 150 psi range .
i. A controlled source of compressed air for final leakage test.
j. Vent air blower capable of producing a reading on the ventilating air manometer of 2.6 inches of water.

13-84. OPERATIONAL TEST (Refer to Figures 13-23 and 13-24.)

a. Install the heater into the test setup and check to be sure that all equipment is mounted, the electrical connections are tight, and mechanical connections are secure.

b. Close the master switch and individually check the operation of the recirculating fan, combustion air blower and fuel pump.

c. Check to see that the pressure switch light is on. This shows that the combustion air blower is delivering sufficient air to close the air pressure switch.

d. Check the manometer connected to ventilating air pressure tap. It should show a reading of 2.5 ± .2 inches of water at rated voltage.

e. The manometer connected to the combustion air pressure tap should show a reading of 1.5 inches of water (minimum) at rated voltage.

f. With the fuel pump switch closed, adjust the pump to 100 psi. Close the heater switch; the heater should ignite within five seconds. (This time may be slightly longer if air must be purged from the lines on the first trial.)

g. The cycling switch should operate to control the outlet air temperature at approximately 188° ± 5° F. This is dependent upon ambient temperature and airflow conditions. If switch operation is within this range, the switch is operating normally. Replace the switch if it does not operate within this range. The switch is adjustable. To increase the temperature that the cycling switch is set to cut off, remove the sealant from the small adjusting screw and turn the screw counterclockwise. To decrease the cutoff temperature, turn the screw clockwise. After adjustment, seal the adjusting screw with Glyptol or equivalent.

h. The cycling switch can be removed from the circuit by means of a cycle switch bypass. Use of the bypass permits checking the operation of the overheat switch.

i. Restrict the ventilating air inlet and observe if the overheat switch shuts off the heater. The overheat light will indicate opening of the overheat switch. It should shut off not lower than 225° ± 5° F. This shutoff temperature is also dependent upon ambient temperature and airflow. The overheat switch is not adjustable.

j. After the overheat switch shuts off, remove the ventilating air restriction. Open the cycle switch bypass. Push the manual reset button on the overheat switch, and the heater should ignite and operate normally.

k. Shutdown the heater test setup and check all components of the heater to be sure no damage has occurred in the test.

l. Remove the heater from the test setup and install it in the airplane, in accordance with instructions in Paragraph 13-19. Remove the cycling switch from the duct used in the test and install according to Paragraph 13-54, Section b.

13-85. LEAKAGE TEST.

a. Apply air pressure of 3.0 psi to the combustion tube of the assembled heater. Leakage shall not exceed 0.66 scfm.

b. Apply air pressure of 16 psi to the ventilating air passages. Leakage shall not exceed 1.5 scfm.

TABLE XIII-IV. TROUBLESHOOTING CHART (HEATING)

Trouble	Cause	Remedy
Heater fails to ignite.	Heater switch or circuit breaker open.	Turn on heater switch or close circuit breaker.
	Low voltage supply.	Apply external power supply; attempt to start heater.
	Fuel cut off from tank.	Turn on manual shutoff valve or master solenoid.
	Pump not operating properly.	Check for low pressure. If pump not supplying 100 psi, replace pump.
	Restriction in fuel nozzle orifice.	Remove the nozzle and clean or replace. (Refer to Paragraphs 13-63, 13-64, 13-65 or 13-66, 13-72, 13-73)
	Fuel lines clogged or broken.	Inspect all lines and connections. It may be necessary to disconnect lines at various points to determine where the restriction is located.
	Defective spark plug.	Replace plug.
	Plug gap setting incorrect.	Check plug gap setting
	Ignition vibrator inoperative.	Replace vibrator. (Refer to Paragraph 13-51.)
	Manual reset limit (overheat) switch open.	Press reset button firmly and recheck to determine reason for switch opening.
	Combustion air pressure switch open. (Defective switch or low combustion air blower output.)	Check for low blower output due to low voltage and correct it. If switch is defective, replace it. (Refer to Paragraph 13-75.)
	Cycling switch open.	Replace if defective. (Refer to Paragraph 13-54.)

TABLE XIII-IV. TROUBLESHOOTING CHART (HEATING) (cont)

Trouble	Cause	Remedy
Recirculating fan fails to operate.	Circuit breaker open.	Close circuit breaker.
	Comfort control master switch OFF.	Turn comfort control master switch ON.
	Worn motor brushes.	Replace motor brushes. (Refer to Paragraph 13-33.)
	Motor burned out.	Remove fan assembly and replace motor.
	Defective radio-noise filter.	Replace filter. (Refer to Paragraph 13-35.)
Recirculating fan uses excessive current and runs at low speed.	Bearings misaligned or preloaded.	Move armature back and forth to relieve preload.
	Faulty bearings.	Replace bearings. (Refer to Paragraph 13-39.)
	Brushes not properly seated.	Brushes should be run in longer. (Refer to Paragraph 13-33.)
Heater ignites then goes out.	Lack of fuel at heater.	Check fuel supply through all components from the tank to the heater. Make necessary corrections.
	Inoperative or chattering combustion air pressure switch.	Adjust or replace switch. (Refer to Paragraph 13-75.)
	Inoperative overheat switch.	Replace switch. (Refer to Paragraph 13-53.)
	Inoperative cycling switch.	Adjust or replace the switch. (Refer to Paragraph 13-54.)
	Low voltage.	Attach external power.

TABLE XIII-IV. TROUBLESHOOTING CHART (HEATING) (cont)

Trouble	Cause	Remedy
Heater fails to shut off.	Fuel solenoid valve in heater stuck open.	Remove and replace solenoid assembly. (Refer to Paragraphs 13-63, 13-64, 13-65 or 13-66.
	Inoperative cycling switch.	Check and repair. (Refer to Paragraph 13-54.)
	Defective cabin comfort control.	Replace control.
	Defective cabin temperature probe.	Replace unit.
Heater ignites but burns unsteadily.	Insufficient fuel supply.	Inspect fuel supply to heater, including shutoff valve, fuel pump, pressure relief valve and fuel lines. Make necessary repairs.
	Clogged heater fuel filter.	Replace filter.
	Spark plug partially fouled.	Replace spark plug. (Refer to Paragraph 13-44 or 13-45.)
	Loose primary connection at ignition assembly.	Tighten the connection.
	Faulty vibrator.	Replace the vibrator. (Refer to Paragraph 13-51.)
	Combustion air blower speed fluctuates. (Can be caused by low voltage, loose blower wheel, worn brushes or motor.	Remove and overhaul the combustion air blower assembly as required or correct low voltage condition.
	High voltage leak in lead between ignition assembly and spark plug.	Replace ignition assembly. (Refer to Paragraph 13-47.)
	Inoperative ignition assembly.	If vibrator is in good condition, replace ignition assembly only. (Refer to Paragraph 13-47.)

TABLE XIII-IV. TROUBLESHOOTING CHART (HEATING) (cont)

Trouble	Cause	Remedy
Heater ignites but burns unsteadily. (cont)	Restriction in fuel nozzle orifice.	Remove nozzle for cleaning or replacement. (Refer to Paragraphs 13-63, 13-64, 13-65 or 13-66, 13-72 and 13-73.)
	Nozzle loose in retainer or improper spray angle.	Tighten or replace the nozzle as required. (Refer to Paragraphs 13-63, 13-64, 13-65 or 13-66, 13-72 and 13-73.)
Recirculating fan uses excessive current and runs at high speed.	Shorted turns in field.	Replace motor. (Refer to Paragraph 13-35.)
Recirculating fan uses excessive current and runs erratically.	Shorted turns in armature.	Replace motor. (Refer to Paragraph 13-35.)
Recirculating fan runs with excessive vibration.	Propeller out of balance.	Rebalance propeller.
	Armature out of balance.	Replace motor. (Refer to Paragraph 13-35.)
Combustion air blower fails to run.	Faulty wiring to motor.	Inspect and replace faulty wiring.
	Poor ground connection.	Tighten ground screw.
	Worn motor brushes.	Replace motor brushes. (Refer to Paragraph 13-33.)
	Blower wheel jammed. (Usually indicated by hot motor housing.)	Overhaul the combustion air blower. (Refer to Paragraphs 13-24 through 13-33.)
	Defective radio-noise filter.	Replace filter.
	Faulty or burned out motor.	Remove combustion air motor for overhaul or replacement of motor. (Refer to Paragraphs 13-24 through 13-33.)

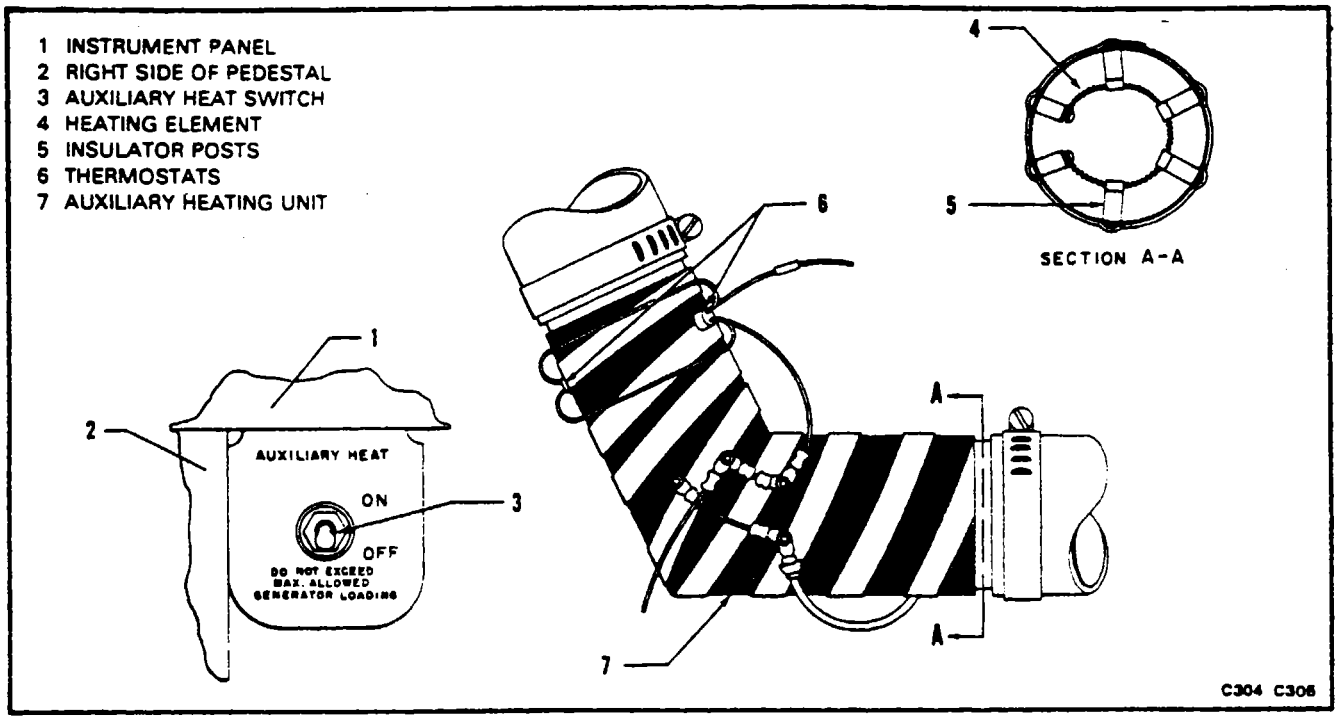

Figure 13-25. Auxiliary Heater and Switch

13-86. AUXILIARY HEATER.

13-87. AUXILIARY HEATER DESCRIPTION. The electric heater consists of six individual resistive wire elements located inside an aluminum duct. They are each insulated from the duct housing by screws, insulator seals and lock washers and are bussed together with copper straps. The heater duct assembly is located in series with the fresh air vents ducting system. An ON/OFF switch, located in the right side instrument panel, energizes the heating elements through a circuit breaker and solenoid. This solenoid is located directly forward of STA. 24.00 on the right longitudinal beam. The recirculating fan relay (See List of Illustrations, Section XV, for location) is also energized by the switch, which in turn supplies power to the fan. It is essential that the fan operates to provide cooling air to the heating elements to control their heat rise. Thermostat switches are located on the heating duct housing, in the event the recirculating fan does not operate.

13-88. AUXILIARY HEATER OPERATION. The heater system is controlled by the ON OFF selector switch. This switch activates the heating unit and recirculating fan. At least four fresh air vents must be open during operation. In the event the recirculating air fan does not operate, the system must be shut down.

NOTE

The auxiliary heater unit must not be operated unless the engines are running or a ground power unit is being used. Doing so will rapidly discharge the battery. See P.O.H. for Emergency Procedures and Limitations.

13-89. REMOVAL OF AUXILIARY HEATER UNIT. The heater is located directly forward of STA. 81.00 pressure bulkhead, above the combustion heater.

a. Disconnect the positive lead from the battery.
b. Remove the access panel located on the right side of the airplanes nose section.
c. Remove the fresh air inlet duct which extends over the heater.
d. Remove the electrical leads from the auxiliary heater.
e. Loosen the clamps securing the rubber boots to the heater unit.
f. Work the unit loose from the boots and remove it from the airplane.

13-90. INSTALLATION OF AUXILIARY HEATER UNIT.

a. Place the heater unit between the rubber boots in the fresh air vent duct.
b. Tighten the clamps around the boots to secure them to the heater.
c. Connect the electrical leads to the heater unit.
d. Replace the fresh air vent duct previously removed.
e. Replace the access panel and connect the positive lead to the battery.

TABLE XIII-V. TROUBLESHOOTING CHART (AUXILIARY HEATER)

Trouble	Cause	Remedy
No auxiliary heat; no airflow at vents (No ammeter load).	Control circuit breaker open.	Reset circuit breaker.
	Control circuit breaker fails to close.	Replace circuit breaker.
	Control circuit breaker fails to open.	Replace circuit breaker and fuse (Find cause for circuit overload).
	Control switch fails to make.	Replace switch.
	Power solenoid fails to close.	Replace solenoid.
	Open circuit in system wiring.	Locate and correct fault.
No airflow at vents (High ammeter load).	Auxiliary heat relay fails to actuate.	Replace relay.
	Recirculating fan fails to operate.	Replace fan.
	Open or short in fan circuit wiring.	Locate and correct fault.
Reduced heat output; reduced ammeter reading.	Resistive wire element open.	Replace element.
No heat at vents; ammeter reading.	Positive bus shorts to bus.	Replace assembly.
	Open or short in heater circuit wiring.	Locate and correct fault.
Heater continues to operate.	Control switch fails to open.	Replace switch.
	Power solenoid fails to open.	Replace solenoid.
Circuit breaker fails to stay reset.	Short in system wiring.	Locate and correct fault.
	System overheat (No airflow).	Find cause for lack of air flow.
	Faulty circuit breaker.	Replace circuit breaker.

13-91. AIR CONDITIONING SYSTEM.

13-92. CABIN AIR CONDITIONING SYSTEM DESCRIPTION AND OPERATION. The air conditioner can be operated independently or in conjunction with the heater through the use of an electronic controller mounted in the lower right section of the instrument panel. The controller receives its signal from a controllable mercury bulb thermostat. When the thermostat calls for cooling, the controller turns on the air conditioner. Under all normal operations, the cabin thermostat will control the operation of the air conditioner or heater.

The air conditioning system uses Freon 12 refrigerant which is drawn into an engine mounted, belt driven, recirculating, axial type, six cylinder compressor. It is driven from a power takeoff on the rear of the right engine at 3968 RPM compressor speed. The compression is set into operation through a magnetic clutch mounted on the compressor. With the compressor in operation, Freon 12 is pumped under high pressure. The Freon vapor is heated as a result of the compressor process. It then flows to the condenser which is a fin and tubing heat exchanger mounted behind the right engine fire wall. The Freon vapor is cooled and condensed to a liquid state by air entering through the lower right side of the nacelle. The air is drawn in and circulated by an impeller fan. The liquid then flows through tubing to the receiver-dehydrator assembly which acts as a reservoir and also functions as a filter to remove any trapped air or moisture that was in the system during the initial charging. High pressure liquid Freon is supplied from the receiver to an expansion valve. This valve meters the refrigerant into the evaporator core at a rate which allows the liquid refrigerant to evaporate. Heat from the evaporator core surface is lost to the boiling and vaporizing Freon which is cooler than the core, thereby cooling the core and the air passing through it. As this process is taking place, moisture (humidity) in the air condenses on the outside surface of the evaporator core and is drained off as water. By the time the refrigerant leaves the evaporator, it has completely vaporized. It then passes through the evaporator control valve which is used to control the evaporator pressure. This is accomplished by restricting the outlet from the evaporator so that the pressure within the evaporator is maintained at a predetermined valve to prevent the freezing of atmospheric moisture on the evaporator. The refrigerant vapor then returns to the compressor where the cycle is repeated. There is a overpressure switch located in the high pressure port of the freon compressor and a thermal switch mounted on the condenser inlet line on various models. (Refer to Parts Catalog for serial numbers.) The overpressure switch will engage the clutch at 375±10PSl and disengage the clutch at 200±10 PSl. The thermal switch will engage the clutch at 170°F and disengage the clutch at 150°F.

13-93. TROUBLESHOOTING. A table at the end of these instructions will assist in locating and correcting malfunctions which may arise in this system.

13-94. MALFUNCTION DETECTION. The detection of system malfunction largely depends on the mechanic's ability to interpret the gauge pressure readings into system problems. A system operating normally will have a low side gauge pressure reading that will correspond with the temperature of the refrigerant evaporating in the evaporator, allowing for a few degrees temperature rise due to loss in the tube walls and fins. The high side will have a gauge pressure that will correspond with the temperature of the refrigerant condensing in the condenser, allowing for a few degrees temperature drop due to loss in the tube walls and fins.

Any deviation from that which is normal indicates a malfunction within the system due to a faulty control device, obstruction, defective part or improper installation.

Detection of system malfunction is made easier with the knowledge that the temperature and gauge pressure of Refrigerant 12 are nearly equal numerically between the pressures of twenty and eighty pounds per square inch (psi). A glance at the temperature-pressure chart will show that there is only a slight variation between the temperature and pressure of the refrigerant in the lower range.

It is correct to assume that for every pound of pressure added to the low side, a temperature increase of about one degree Fahrenheit takes place. For instance, a pressure of 23.8 on the chart indicates a temperature of 24°F. A change of pressure of almost one pound to 24.6 psi gives us a temperature increase to 25°F.

NOTE

For each 1,000 feet of elevation above sea level, the gauge readings will be about one inch of mercury or 1/2 psi higher than the chart indicates.

It must be pointed out that the actual temperature of the air passing over the coils of the evaporator will be several degrees warmer allowing for a temperature rise caused by the loss in the fins and tubing of the evaporator.

The importance of a seasonal checkup of the air conditioning system should be brought to the attention of the customer whenever possible. A thorough check of the system performed in a methodical manner will reveal trouble the customer is often not aware of. Locating and repairing the trouble early will usually result in savings to the customer both in time and additional troubles that too often result from neglect.

A performance test of the system is the only positive way in which the complete system can be checked for efficient operation. The air conditioning system should be given this test before work is begun on the system whenever possible; however, if the system is completely inoperative, repairs must be performed before the system can be properly tested. The test can uncover further work that must be performed before the system is brought to its full operating efficiency. The performance test should always be performed after repair work has been done and before the aircraft is released to the customer. The serviceman performing this test carefully will insure that the repairs have been properly performed and that the system will operate satisfactorily.

The performance test when properly performed includes a thorough examination of the outside of the system as well as the inside. Many related parts are overlooked because it is felt they are of no bearing on the operating efficiency of the unit. For this reason, a thorough visual inspection of the complete system should be performed, followed by an operating inspection of the system.

13-95. RECOMMENDED GROUND OPERATING INSTRUCTIONS.

a. The following steps should be performed to insure proper functioning of the air conditioning system:

1. If the outside air temperature is between 70 to 90°F perform the following steps.

a. Set manual air control lever in the pressurized mode position.

b. Ascertain that the cabin door is closed, the cabin comfort master switch is ON and that the air condition automatic mode is ON.

c. Adjust for desired temperature.

d. Set the right engine power levers to obtain 55%compressor speed, out of feather condition.

e. Set the left engine power levers as desired.

2. If the outside air temperature is between 90 to 95°F perform the following steps:

a. Set manual air control lever in the pressurized mode position.

b. Ascertain that the cabin door is closed, the cabin comfort master switch is ON and that the air condition manual mode is ON.

c. Set the right engine power levers to obtain 55%compressor speed, out of feather condition.

d. Set the left engine power levers as desired.

3. If the outside air temperature is 95°F and above perform the following steps:

a. Set manual air control lever in the recirculate mode position.

NOTE

Maximum continuous operation with the cabin air control in the RECIRCULATED AIR position should be limited to 15 minutes. At least 5 minutes in either OUTSIDE AIR or PRESSURIZED AIR is required after each 15 minutes in RECIRCULATED AIR.

b. Ascertain that the cabin door is closed, the cabin comfort master switch is ON and that the air condition manual mode is ON.

c. Set the right engine power levers to obtain 55%compressor speed, out of feather condition.

d. Set the left engine power levers as desired.

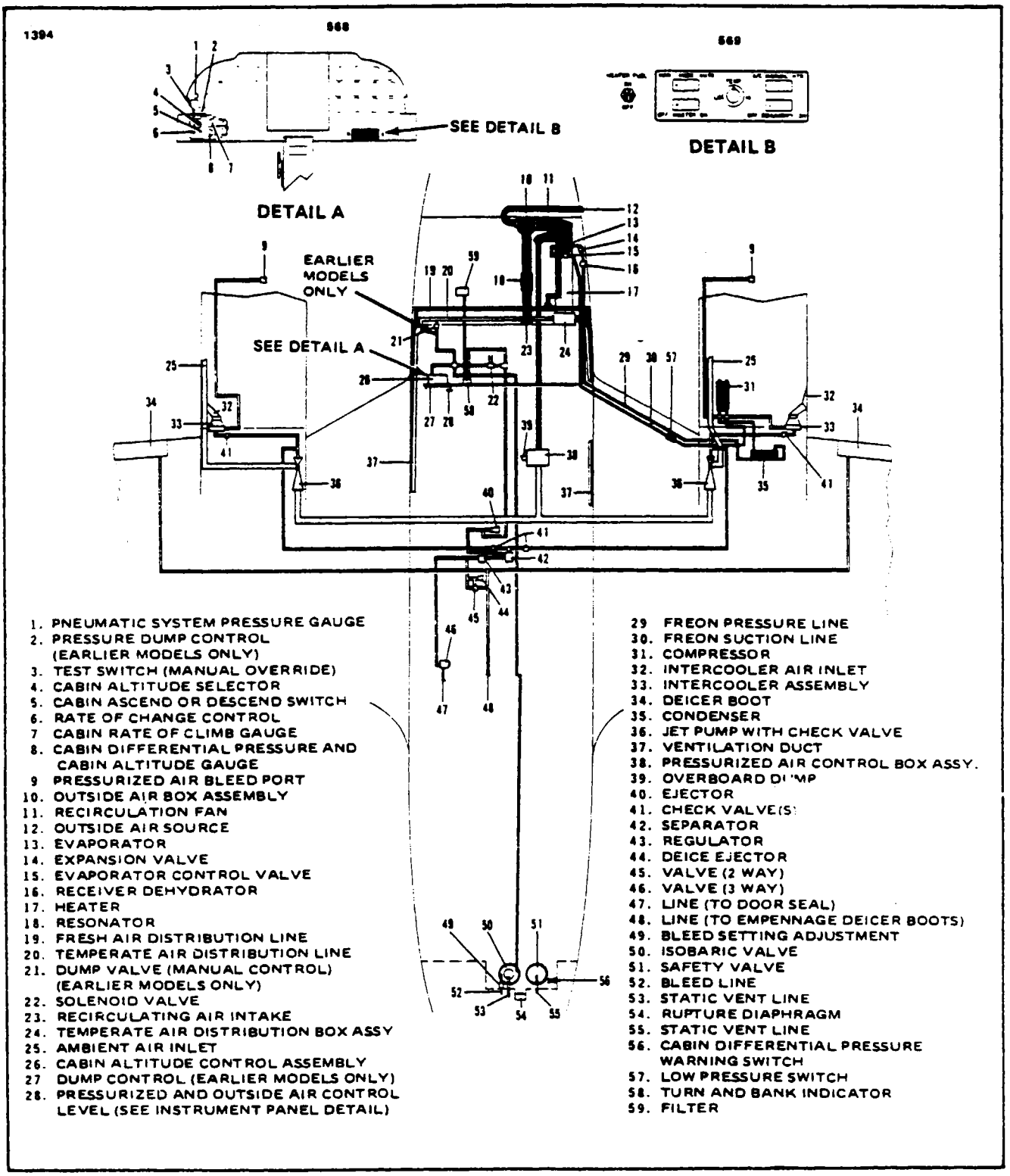

Figure 13-26. Air Conditioning Flow Diagram

TABLE XIII-VI. TEMPERATURE PRESSURE CHART (STANDING SYSTEM)

Evaporator Pressure Gauge Reading p.s.i.	Evaporator Temperature °F.	High Pressure Gauge Reading p.s.i.	Ambient Temperature °F.
0	-21	72	40
2.4	-15	86	50
4.5	-10	105	60
10.1	2	109	62
11.2	4	113	64
12.3	6	117	66
13.4	8	122	68
14.6	10	126	70
15.8	12	129	71
17.1	14	132	72
18.3	16	134	73
19.7	18	137	74
21	20	140	75
22.4	22	144	76
23.1	23	148	77
23.8	24	152	78
24.6	25	156	79
25.3	26	160	80
26.1	27	162	81
26.8	28	165	82
27.6	29	167	83
28.4	30	170	84
29.2	31	172	85
30	32	175	86
30.9	33	177	87
31.7	34	180	88
32.5	35	182	89
33.4	36	185	90
34.3	37	187	91
35.1	38	189	92
36	39	191	93
36.9	40	193	94
37.9	41	195	95
38.8	42	200	96
39.7	43	205	97
41.7	45	210	98
43.6	47	215	99
45.6	49	220	100
48.7	52	228	102
49.8	53	236	104
55.4	57	260	110
60	62	275	115
64.9	66	290	120

13-96. SPECIAL SERVICING PROCEDURES. The air conditioning system should be serviced by a qualified shop with trained personnel. The following procedures and precautions should be observed:

The efficiency of this system depends upon the pressure-temperature relationship of pure refrigerant. As long as the system contains only pure refrigerant plus a specified amount of compressor oil (which is mixed with the refrigerant), it is considered to be chemically stable. Foreign materials within the system will affect the chemical stability, contaminate the system and decrease its efficiency.

WARNING

The air conditioner must not be operated with the condenser cooling fan not operating. High compressor discharge pressures will result from the low condenser cooling airflow. If the air conditioner is accidentally operated without the condenser fan for more than about three minutes, there is a good chance that freon and compressor oil will be lost through the relief valve located on the compressor. (Refer to Figure 13-33.)

a. The most accurate way to check the condition of the system is by attaching gauges to the system as shown in Figure 13-28.

b. Always wear safety goggles when handling refrigerant.

WARNING

One of the most important precautions is protection of the eyes when handling refrigerant. Any liquid refrigerant which may accidentally escape is approximately 21.7° F below zero. Serious injury could result if refrigerant comes in contact with the eyes. If refrigerant comes in contact with the eyes:

1. DO NOT rub the eyes. Rinse the eyes with cold water to gradually get the temperature above the freezing point.
2. Apply a protective film of antiseptic oil over the eyeball to reduce the possibility of infection.
3. Consult a doctor or eye specialist immediately. Should refrigerant come in contact with skin, it should be treated as though the skin had been frostbitten or frozen.

TABLE XIII-VII. ALUMINUM TUBING TORQUE

Metal Tube O.D	Thread and Fitting Size	Alum. Tubing Torque
1/4	7/16	5-7 ft. lbs.
3/8	5/8	11-13 ft. lbs.
1/2	3/4	15-20 ft. lbs.
5/8	7/8	21-27 ft. lbs.
3/4	1-1/16	28-33 ft. lbs.

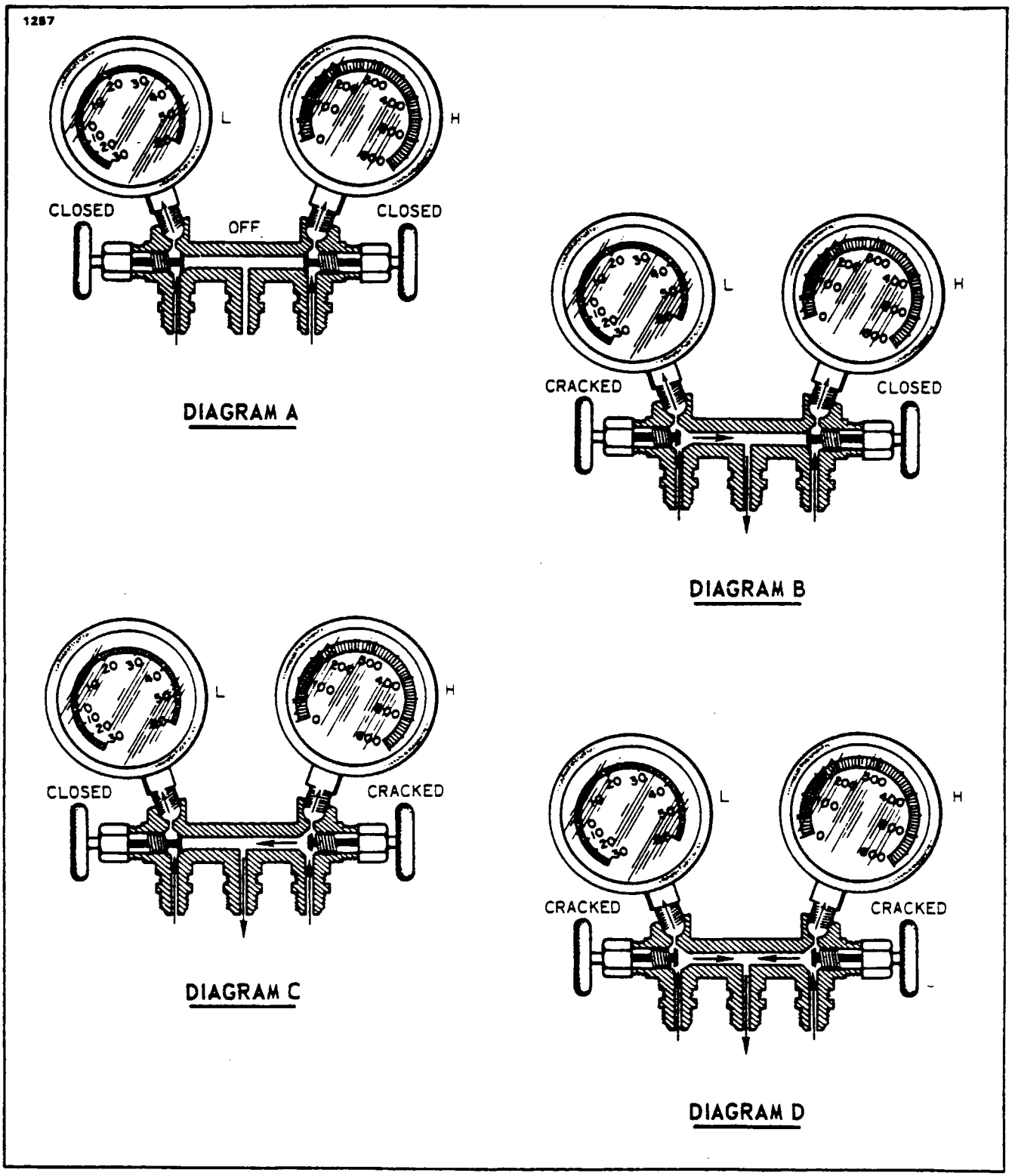

Figure 13-27. Manifold Set Operation

c. Large quantities of Freon 12 refrigerant should not be discharged into a closed room. It may displace the oxygen in the air.

d. Large quantities of Freon 12 which come in contact with live flame will produce a poisonous gas.

e. Keep lines capped to prevent foreign material and moisture from entering the system.

f. This is a high pressure system, and the pressure should be released slowly before disconnecting any lines.

g. Use clean, dry refrigerant oil which should be contained in a capped container to reduce the possibility of the oil absorbing moisture and dirt.

h. Replace O-rings when a connection has been broken. Dip new O-rings in refrigeration oil before using. Do not over-torque connections. (Refer to Table XIII-VII.)

i. To insure a consistent seal on all flared and pipe fittings used on the air conditioning system, seal the fittings with Loctite refrigerant sealant.

j. Torque all flare fittings. (Refer to Table XIII-VII.)

NOTE

Any tools called out by a J-number in this section may be purchased from:

Service Tool Division
Kent-Moore Corporation
1501 South Jackson Street
Jackson, Michigan 49203

Phone: 517-784-8561

13-97. TEST GAUGE AND MANIFOLD SET. The proper testing and diagnosis of the air conditioning system requires that a manifold gauge set be attached to the system. This set consists of two gauges mounted to a manifold. One gauge is a high pressure gauge used in the discharge side of the system. The other is a low pressure gauge used in the suction side of the system. The manifold is a device having fittings for both gauges and connection hoses with provisions for controlling the flow of refrigerant through the manifold. (See Figure 13-27.)

The center port of the manifold set is used for charging or evacuation procedures or any other service that may be necessary.

Both the high and low side of the manifold have hand shutoff valves. When the hand valve is turned all the way in, in a clockwise direction, the manifold is closed. The pressures on that side of the system will, however, be recorded on the gauge above the hose.

Cracking the hand valve, in the counterclockwise direction, opens the system to the middle service port of the manifold set. This is desirable only when it is necessary to let refrigerant out or into the system.

13-98 CHECKING SYSTEM FOR LEAKS. This may be accomplished easier and safer by using an electronic leak detector. These are compact electronic type units which sense freon. They may be purchased from TIF INSTRUMENTS, 9101-T NW 74th St., Miami, Florida 33150, or the KENT-MOORE Corporation whose address is listed above.

a. Connect a manifold gauge set into the system and charge the system. (Refer to Charging the System.) A minimum of 50 psi is needed for leak detection.

b. Close the low side manifold valve and open the high side manifold valve.

c. Open the refrigerant container service valve and allow the pressure at the low side gauge to reach 50 psi, at which time close the high side manifold valve.

d. Close the refrigerant container service valve and remove the hose if no leaks are evident.

e. It is advisable to use an electronic leak detector to check this system instead of an open flame leak detector.

f. If any leaks are found, purge the system of refrigerant. Make the necessary repairs and check the compressor oil.

g. Add oil if required; then repeat Steps a thru e.

h. If no further leaks are found, the system may be evacuated and charged.

CAUTION

Many electronic leak detectors do not reduce the hazard of igniting an explosive mixture. Read the instructions supplied with the unit and be sure to properly ventilate any area to be checked.

13-99. EVACUATING THE SYSTEM. If the system has been operated in a discharged condition or any time the system has been open to atmospheric pressure, the receiver-dryer must be replaced, and the system evacuated to remove any trapped air and moisture which has entered it. In the following procedure, the specification of 28 inches of vacuum is used. This figure is based on performing the operation at an elevation at or near sea level. For every 1000 feet of elevation above sea level, the specification should be lowered one inch. As we lower the pressure in the air conditioning system, we lower the boiling temperature of the water (moisture) that may be present. Then we are able to pull this water in the form of vapor out of the system. Table XIII-VIII demonstrates the effectiveness of moisture removal under a given vacuum:

a. Remove the cowling from the right engine. (Refer to Section VIII.)

CAUTION

Ascertain that all system pressure is released before attempting the evacuation. (Refer to Paragraph 13-93.)

b. Connect the gauge set J-23575 to the vacuum pump and refrigerant charging drum as shown in Figure 13-28. Use J-5420 Schrader valve adapters to connect gauge lines to the Schrader valve fittings at the compressor and evaporator control valve. (Refer to Figure 13-28.)

c. Open gauge set high and low pressure valves and start vacuum pump. Pull a vacuum of (refer to Table XIII-VIII). Close gauge set valves and vacuum pump valve. Shut off vacuum pump. If a loss of vacuum exceeds 2 inches in five minutes, the system leaks. Check all system connections for proper tightness

d. If system does leak, crack open refrigerant drum valve and the low pressure gauge valve and allow system to charge to drum pressure. Close drum valve. Using a refrigerant leak tester, first check system for leaks. Correct leaks and repeat procedure until leaks are eliminated.

e. When system no longer leaks, proceed to evacuate the system.

f. Discharge refrigerant from system; then open both gauge set valve and start vacuum pump, then open vacuum pump valve.

NOTE

DO NOT discharge refrigerant through vacuum pump.

g. Allow pump to run for 15 minutes at a vacuum of (refer to Table XIII-VIII) Close the high pressure gauge valve and vacuum pump valve; then stop vacuum pump. The system is now ready for charging.

NOTE

The system should be charged as soon as it has been evacuated

TABLE XIII-VIII. VACUUM vs. TEMPERATURE

	System Vacuum	Temperature °F
COMPOUND GAUGE READING IN INCHES OF MERCURY VACUUM	27.99	100
	28.89	80
	29.40	60
	29.71	40
	29.82	20
	29.88	0

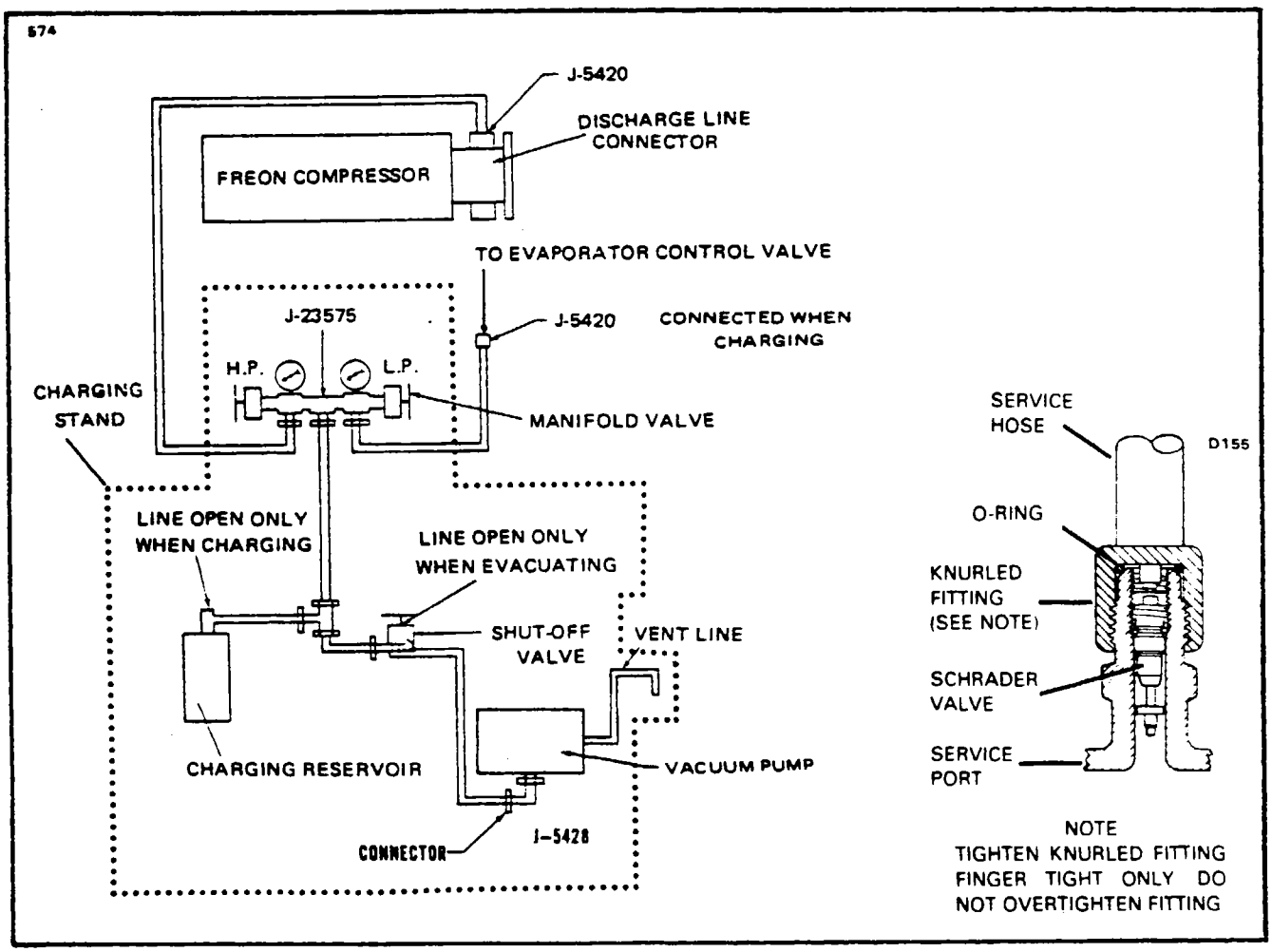

Figure 13-28. Charging and Evacuating Schematic (Charging Stand Method)

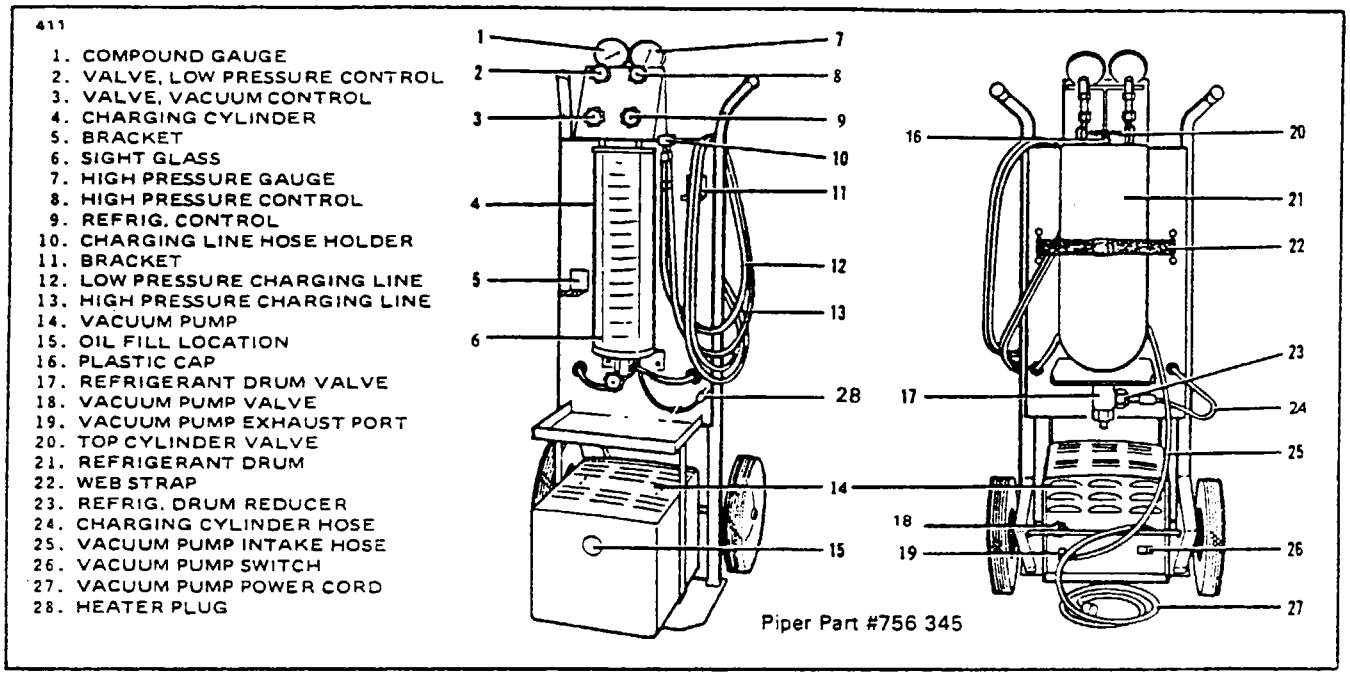

Figure 13-29. Charging Stand J-23500

13-100. CHARGING THE SYSTEM. When the system is completely evacuated in accordance with instructions given in Paragraph 13-99, one of the following procedures should be used to charge the system:

Method 1 WITH A CHARGING STAND. This is the preferred method of charging the system.

a. Be certain all valves on charging stand are closed. (Refer to Figure 13-29.)

b. Connect high pressure gauge line with adapter J-5420 attached to the compressor discharge Schrader valve fitting. (Refer to Figure 13-28.)

c. Turn high pressure control one turn counterclockwise (open). Crack open low pressure valve and allow refrigerant gas to lightly hiss from low pressure gauge line for 3 seconds. Then connect low pressure gauge line (with adapters J-5420) to low pressure gauge fitting on evaporator control valve.

d. With charging stand installed as previously described, remove low pressure gauge line at evaporator control valve.

e. Crack open high and low pressure control valves on stand and allow refrigerant to purge from system. Purge slow enough so that oil does not escape from system along with refrigerant.

f. When refrigerant flow nearly stops, connect low pressure gauge line to evaporator control valve.

g. Turn on vacuum pump and open vacuum control valve.

h. With system purged as above, run pump until 26 to 28 inches of vacuum is obtained. Continue to run pump for 15 minutes after the system reaches 26 to 28 inches vacuum. (Refer to Table XIII-VIII.)

NOTE

In all evacuating procedures, the specification of 26 to 28 inches of mercury vacuum is used. These figures are only attainable at or near sea level. For each 1000 feet above sea level where this operation is being performed, the specifications should be lowered by one inch.

i. If 26 to 28 inches of vacuum (corrected to sea level) cannot be obtained, close vacuum control valve and shut off vacuum pump. Open refrigerant control valve and allow some refrigerant to enter system. Locate and repair all leaks. (Refer to Checking System for Leaks.)

j. After evacuating for 15 minutes, add 1/2 pound of refrigerant to system as described in Step i above. Purge this 1/2 pound and re-evacuate for 15 minutes. This second evacuation is to make sure that as much contamination is removed from the system as possible.

k. Only after evacuating as above, is the system ready for charging. Note reading on sight glass for charging cylinder. If it does not contain a sufficient amount for a full charge, fill to the proper level.

l. Close low pressure valve on charging stand. Fully open stand refrigerant control valve and allow all liquid refrigerant to enter the system. When a 5 pound charge of refrigerant has entered system, turn off refrigerant control valve.

m. If full charge of refrigerant will not enter system, close high pressure control and refrigerant control valves. Start engine and run at idle with compressor operating. Crack refrigerant control valve and low pressure control on stand. Watch low side gauge and keep gauge below 50 psi by regulating refrigerant control valve. Closing valve will lower pressure. This is to prevent liquid refrigerant from reaching the compressor while the compressor is operating. When required charge has entered system, close refrigerant control valve and close low pressure control.

n. System is now charged and should be performance tested before removing gauges.

Method 2: REFRIGERANT DRUM METHOD. (Refer to Figure 13-30)

a. DISCHARGING THE SYSTEM:

1. Close both valves on the gauge set J-23575. Connect the high pressure hose from the gauge set with adapter J-5420 attached to the compressor discharge Schrader valve fitting. Connect the low pressure hose from the gauge set with adapter J-5420 attached to the evaporator control valve.

b. EVACUATING THE SYSTEM: (Refer to Paragraph 13-99.)

c. CHECKING THE SYSTEM FOR LEAKS: (Refer to Paragraph 13-98)

d. CHARGING THE SYSTEM - FULL CHARGE: The refrigerant supply or source may be a drum, cylinder, can or other type of container. Only refrigerant vapor should be charged into the suction side of the system when the compressor is running. A vapor charge is taken from the top of the refrigerant container. A liquid charge is taken from the bottom of the refrigerant container, or with the container inverted, and compressor shut down (not running).

1. Connect a suitable charging line to the gauge set connected to the evacuated system.

2. Purge the gauge set by opening the two valves on the set and opening the valve on the refrigerant containers. After refrigerant has forced all air out of the hoses and gauge set, retighten the valves first at the gauge set and then at the refrigerant container.

3. Open the refrigerant supply valve and the high pressure valve on the gauge set to allow 5 pounds of liquid refrigerant to flow into the system. This charge should be measured with a scale that is accurate to within two ounces, by first weighing the container and then subtracting the required charge.

4. If a full charge cannot be installed per the above procedures, warm the container to a maximum of 125°F and continue charging the system. If a full charge still cannot be installed, charge with refrigerant vapor per Step 5.

5. Close both valves on the gauge set. Operate the engine at idle setting and have the airconditioner on. Open the low pressure valve until the remainder of the charge has entered the system. Close the container valve when the proper charge is reached, this will allow the compressor to draw in any refrigerant left in the line. Then close the low pressure valve on the gauge set.

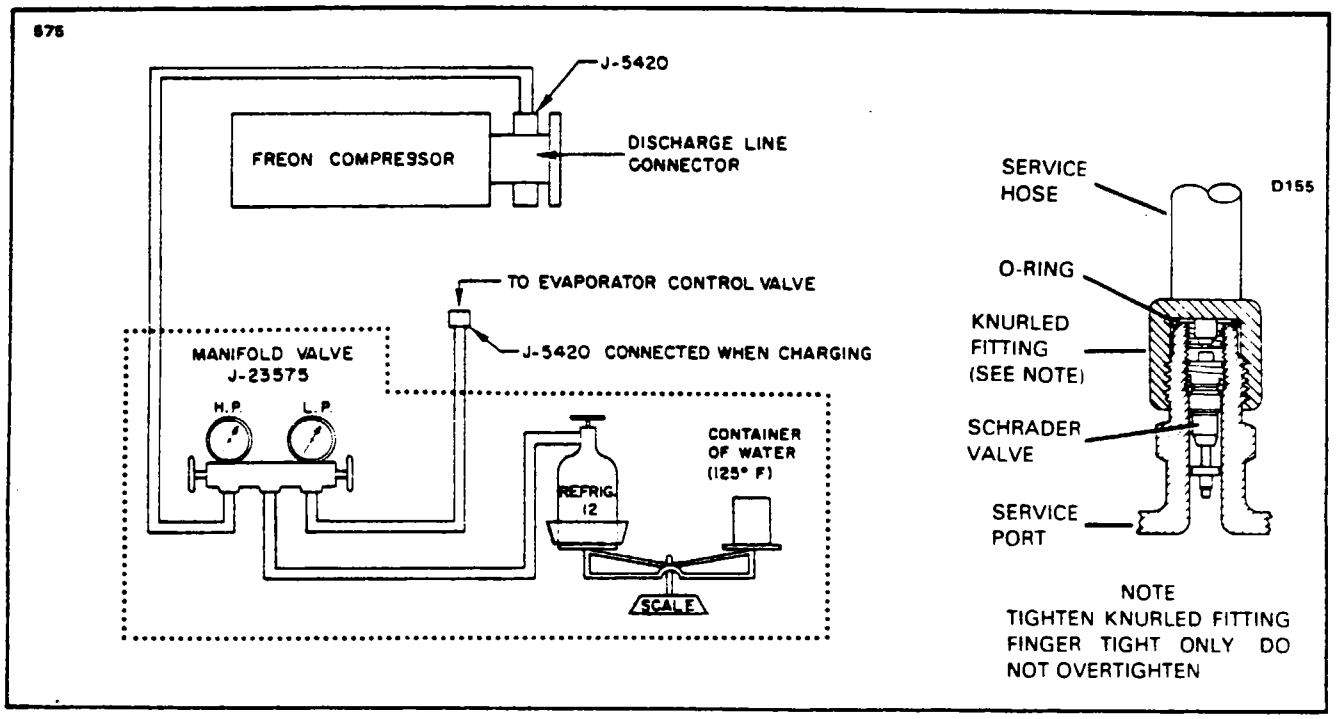

Figure 13-30 Charging Schematic
(Refrigerant Drum Method)

13-101. FLUSHING THE AIR CONDITIONING SYSTEM.

a. Install a charging line to the compressor discharge Schrader valve and to a drum of Refrigerant 12.

b. Disconnect the liquid line from the receiver-dehydrator assembly on the inlet side and cap the receiver-dehydrator immediately.

c. Open the refrigerant drum valve and turn the drum upside down to allow liquid refrigerant to flush through the condenser and out the line. Use approximately 2 pounds of refrigerant for this operation.

d. Close the drum valve and connect the receiver-dehydrator assembly.

e. Remove the expansion valve screen and clean or replace as required. (Refer to Figure 13-47)

f. Remove the charging line from the compressor. Install the gauge set and evacuate the entire system.

g. Recharge the system.

13-102. COMPRESSOR SERVICE. It is not advisable to service the compressor in the field. It should be done by a qualified shop which has the special equipment and trained personnel required to properly service the unit.

Maintenance of this unit and its related components is limited to the replacement of worn drive belt and magnetic clutch. Any other service requires removal of the compressor from the system.

NOTE

If the drive belt is found defective and replaced, adjust the initial tension as specified in Table XIII-IX.

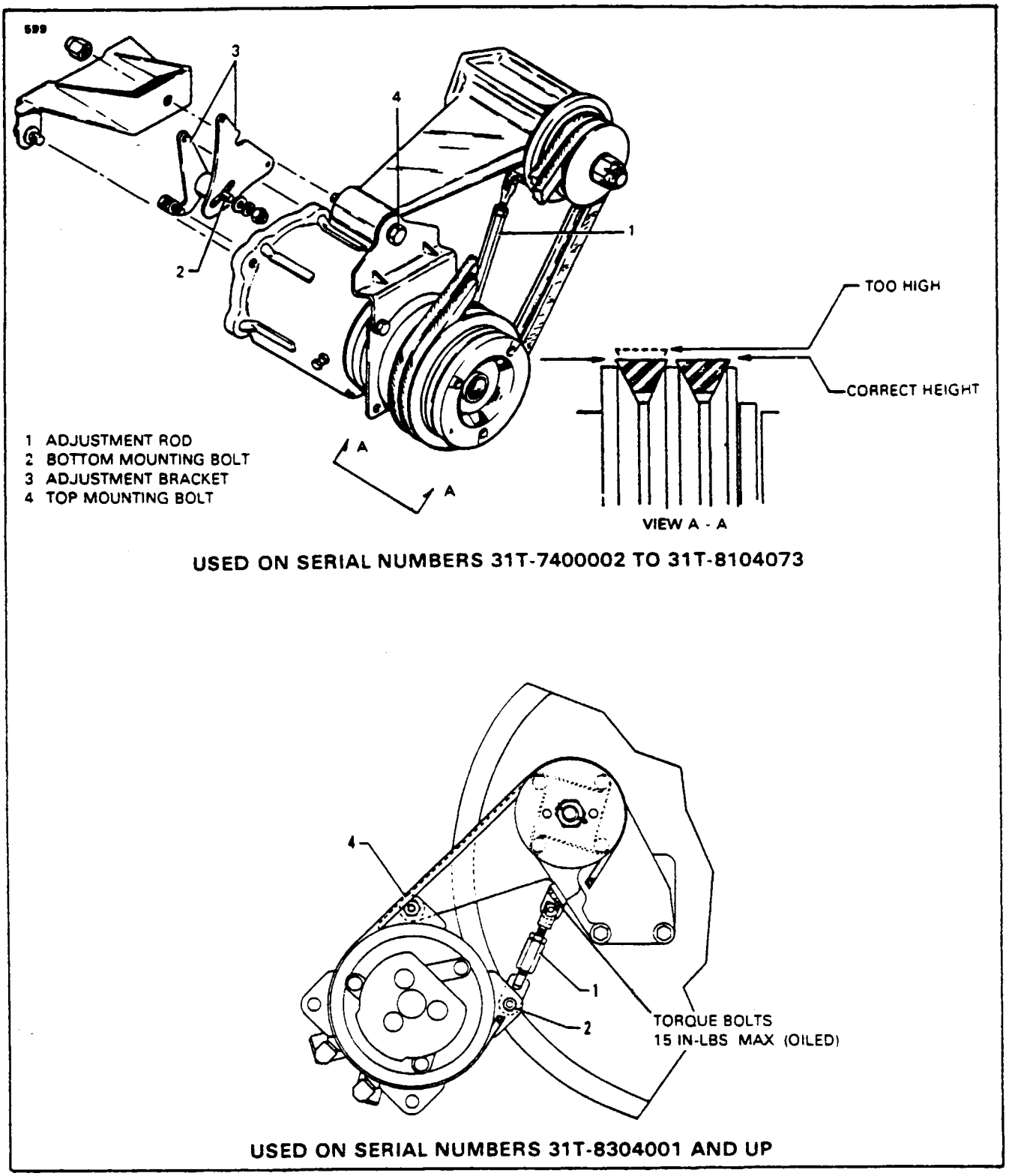

Figure 13-31. Compressor and Drive Assembly (Dual Belt)

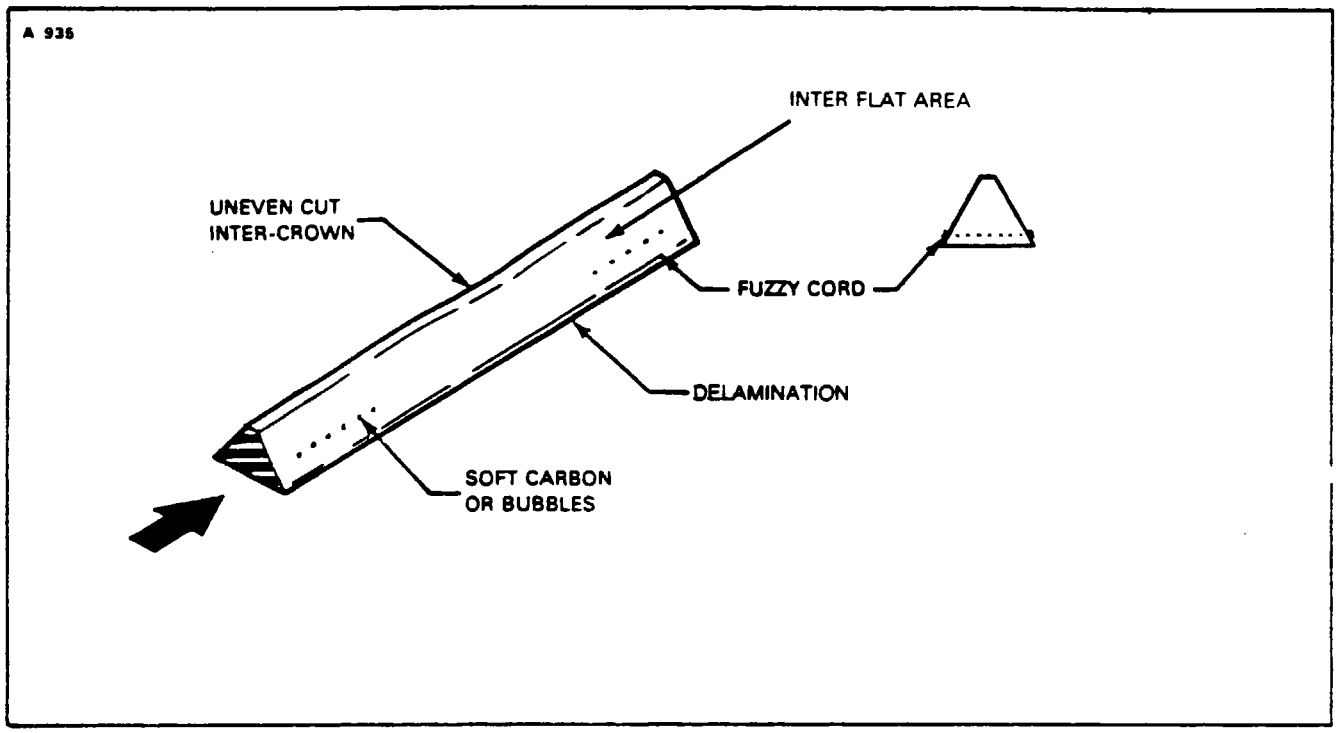

Figure 13-32. Belt Inspection

13-103 REMOVAL OF COMPRESSOR. (Refer to Figure 13-31.)

a. Make sure that the circuit protector is off for the air conditioning system.
b Remove cowling from right engine. (Refer to Section VIII.)
c. Disconnect the electrical leads to the magnetic clutch on the compressor.
d. Discharge the system and disconnect the high and low pressure lines at the compressor
e. Loosen the jam nut on the adjustment rod; then loosen the mounting bolts on top and remove the bottom ones.
f. Run the adjustment up to relieve tension on the adjustment rod.
g. Remove the top clevis pin to disconnect the adjustment rod.
h. Move the compressor IN to relieve tension on the belt.
i. Slip the belt off the compressor pulley
j. Support the compressor; remove the mounting bolts and remove the compressor from the nacelle

NOTE

A normally running frigidaire compressor will retain approximately 6.5 oz. of refrigerant oil during operation. If it becomes necessary to replace an old compressor, it is important that the new compressor contain the same amount of refrigerant oil as that contained in the compressor being replaced. This procedure should not be confused with that given under Checking and Adding Oil, given in Paragraph 13-107 (which procedure is for checking total oil in the air conditioning system).

k. While working over a draining tray, and with the clutch end up, completely drain the sump and remove the protective plate from the end of the compressor. Rotate the compressor shaft with a socket wrench several revolutions to force the oil from the piston tops.

NOTE

Measure the amount of oil drained from the old compressor. The new compressor to be installed should contain an equal amount of oil as that removed from the old compressor (approximately 6.5 oz. for frigidaire compressors). Sankyo compressors add 1 oz. to the amount drained from the old compressor.

13-104 BELT INSPECTION. (Refer to Figure 13-32.) Belt conditions, alignment, and tension are very critical. Carefully inspect old belts and the new belts before replacement. The existence of any one of the following conditions is sufficient cause for rejection of a belt.

a. Unevenness - look for areas where the inter flat area is uneven.
b. Cords broken or fuzzy or where the cord appears to be coming out of the belt.
c. Holes in belt side wall.
d. Obvious flaws in the belt, such as lumps, thin spots, etc.

13-105. INSTALLATION OF COMPRESSOR. (Refer to Figure 13-31.)

a. Drain the oil from the new compressor as per instructions in Step k of the preceding paragraph. Refill the unit with the same amount of oil as removed from the old unit. It should be approximately 6.5 oz. for the Frigidaire compressors. For Sankyo compressors add 1 oz. to the amount drained from the old compressor. The oil from the new compressor can be reused if it is drained into a clean container and filtered before being reused.
b. Place the compressor in the nacelle and attach with the mounting bolts.
c. Slip the belt on the compressor pulley.
d. Attach the compressor adjustment rod.
e. Adjust the rod and tighten the mounting bolts. Refer to Table XIII-IX for the required belt tension.

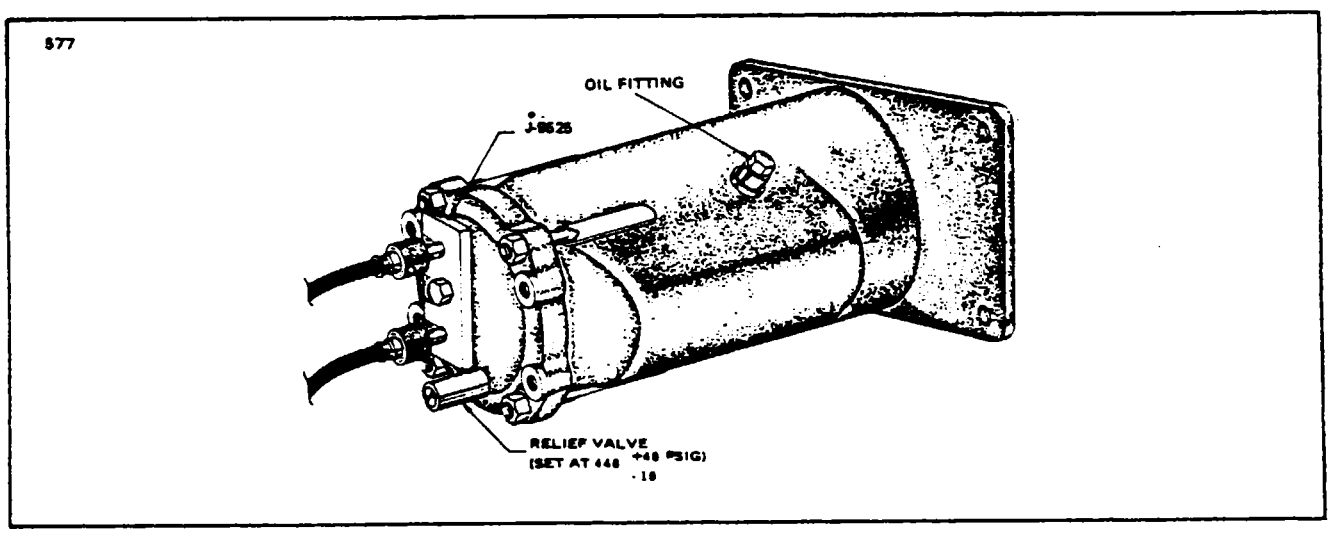

Figure 13-33. Leak Test

TABLE XIII-IX. COMPRESSOR BELT TENSION

Belt Condition	Required Tension	
	Single Belt	Dual Belt
New	175 lbs.	100 ± 5 lbs.
After One Hour	130 lbs.	50 lbs.[1]
In Service		90 ± 5 lbs.[3]

NOTES:
(1) Check tension immediately after engine shutdown (hot).
(2) Check tension with Gates Rubber Co. #150 tensiometer, or equivalent.
(3) If recheck is made cold and tension is below 90 L.B., readjust to the above (Sankyo).

f. Connect the lines to the compressor and ascertain that the compressor rotates freely through two complete revolutions. Do not exceed 8 foot-pounds rotating torque.

g. Evacuate and charge the system. (Refer to Paragraph 13-99, Evacuating the System and Paragraph 13-100, Charging the System.)

h. Connect the electrical leads to the magnetic clutch.

i. Install cowling on the right engine. (Refer to Section VIII.)

j. Reset the air conditioning circuit breaker.

k. Check operation of the air conditioning system.

13-106 LEAK TESTING THE COMPRESSOR. With Tool J-9625 installed on compressor (refer to Figure 13-33) leak test the compressor as follows:

a. Using the J-23575 gauge set, connect the center hose to the refrigerant drum and the high and low pressure Schrader valves

b. With the high pressure valve and the low pressure valve open, allow refrigerant to flow to the compressor.

c. Open the oil plug fitting in the compressor housing and allow the air to exhaust until refrigerant starts to flow from the fitting.

d. Close the oil plug fitting and allow the drum pressure to stabilize in the compressor.

e. Check and correct any leaks that may exist.

f. Remove gauge set and cap fittings on Tool J-9625; then add oil as outlined under Checking and Adding Oil.

13-107. CHECKING AND ADDING OIL (Frigidaire Compressor). Compressor oil will not be lost unless a freon leak has occurred. therefore, the oil level is not to be checked unless a freon leak has occurred. However, it is possible to lose freon from the system without loss of compressor oil. It is then a matter of good judgment as to whether the oil level is to be checked. If any major loss of oil has occurred, proceed as follows after making the necessary repairs. (Refer to Figure 13-31.)

a. Remove belt.

b. Support the compressor and remove the top mounting bolt.

c. Rotate the compressor 30 degrees from horizontal.

d. If the engine has not been operated within the last hour, it will be necessary to warm the compressor case for 15 minutes by a light source or heat gun. The compressor must be slightly warmer than the rest of the air conditioning system to drive out all liquid freon, otherwise a diluted oil reading will be obtained. Do not overheat the compressor.

e. Loosen the oil drain screw and allow oil to drain from the compressor.

f. If the system is under pressure, the oil will come out of the drain with considerable force and care must be exercised not to lose an excessive amount of oil. If the system is not under pressure, the drain screw may have to be removed to allow the oil to drain. If only oil comes out of the compressor, the oil level is sufficient. If gas escapes from the drain screw, the oil level must be re-established by the alternate procedure given in Step g.

NOTE

The following alternate procedure must be used if a major freon loss has occurred. Example: Large oil loss visible at leak location.

g. If an excessive amount of oil is lost during the oil level check, the following alternate procedure must be used:

1. Rotate the compressor until the oil drain is vertical and drain all the oil from the compressor. Allow the freon charge to slowly discharge through the oil drain.

2. Rotate compressor back and attach to engine.

3. Add 6.5 ounces of refrigerant oil (Frigidaire 525 Viscosity Oil, Suniso No. 5 or Texaco Capella "E") to compressor through oil drain.

4. Replace oil drain screw.

5. Refer to Paragraph 13-105 for compressor installation.

6. Check system for leaks and recharge per Paragraph 13-100.

13-107a. CHECKING COMPRESSOR OIL LEVEL (Sankyo Compressor). (S/N 31T-8304001 and up) Whenever a system component has been replaced or there is an obvious leak, use the following procedure to check the compressor oil level (after making necessary repairs): (Refer to Figure 13-33a.)

a. Run the compressor for 10 minutes with engine at idle RPM.

b. Shut off the engine and slowly discharge the system to prevent loss of oil.

c. Disconnect the belt adjustment turnbuckle, loosen the mount bolt and remove the belts.

d. Rotate the compressor so that the oil filler plug is in a top dead center (TDC) position. This may be done with use of an angle protractor

e. Remove plug slowly, this allows refrigerant to separate from oil.

NOTE

The front plate hub has a lobe indexed 180° from TDC of the cam rotor

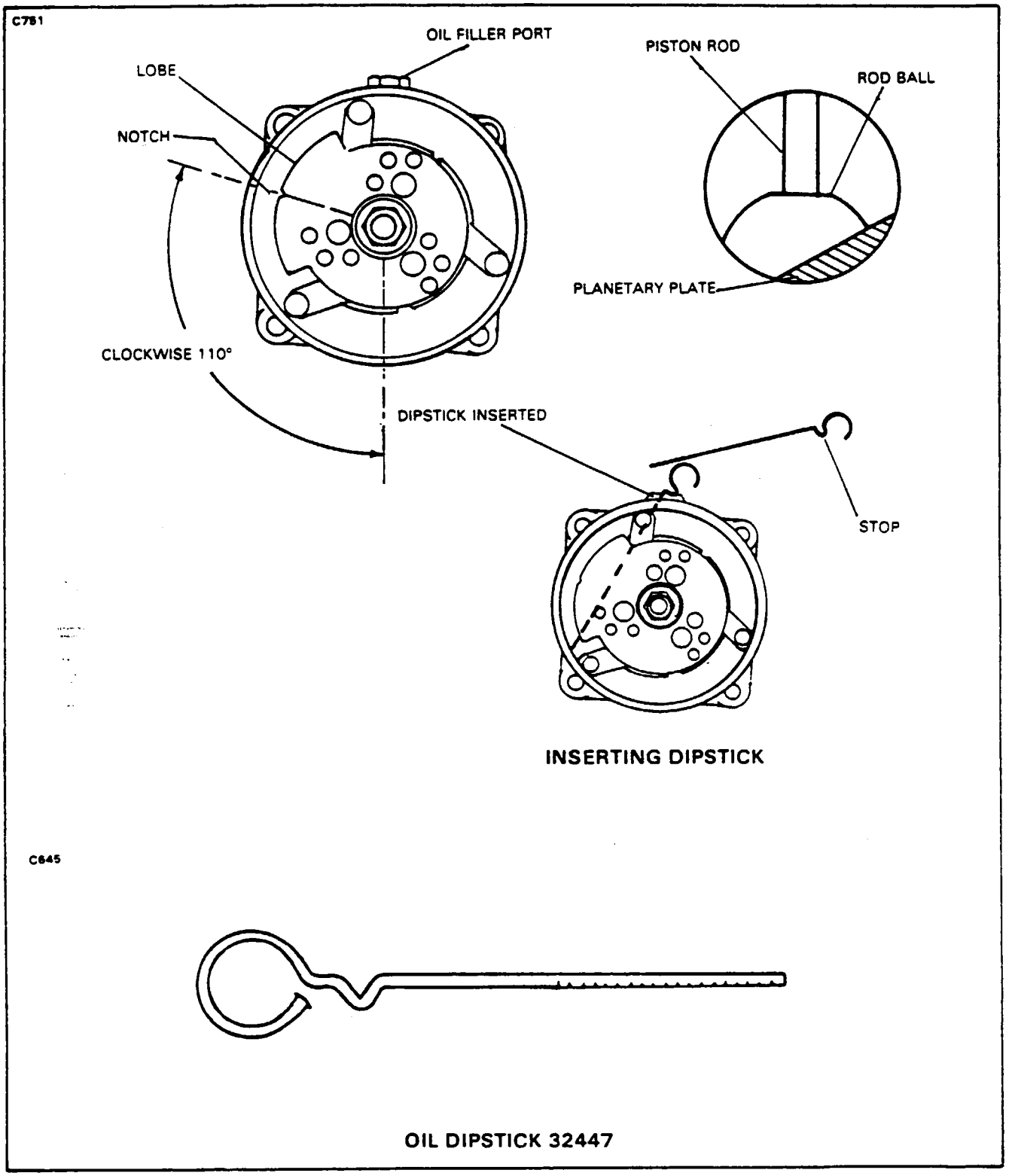

Figure 13-33a. Positioning Sankyo Compressor Internal Parts (S/N 31T-8304001 and up)

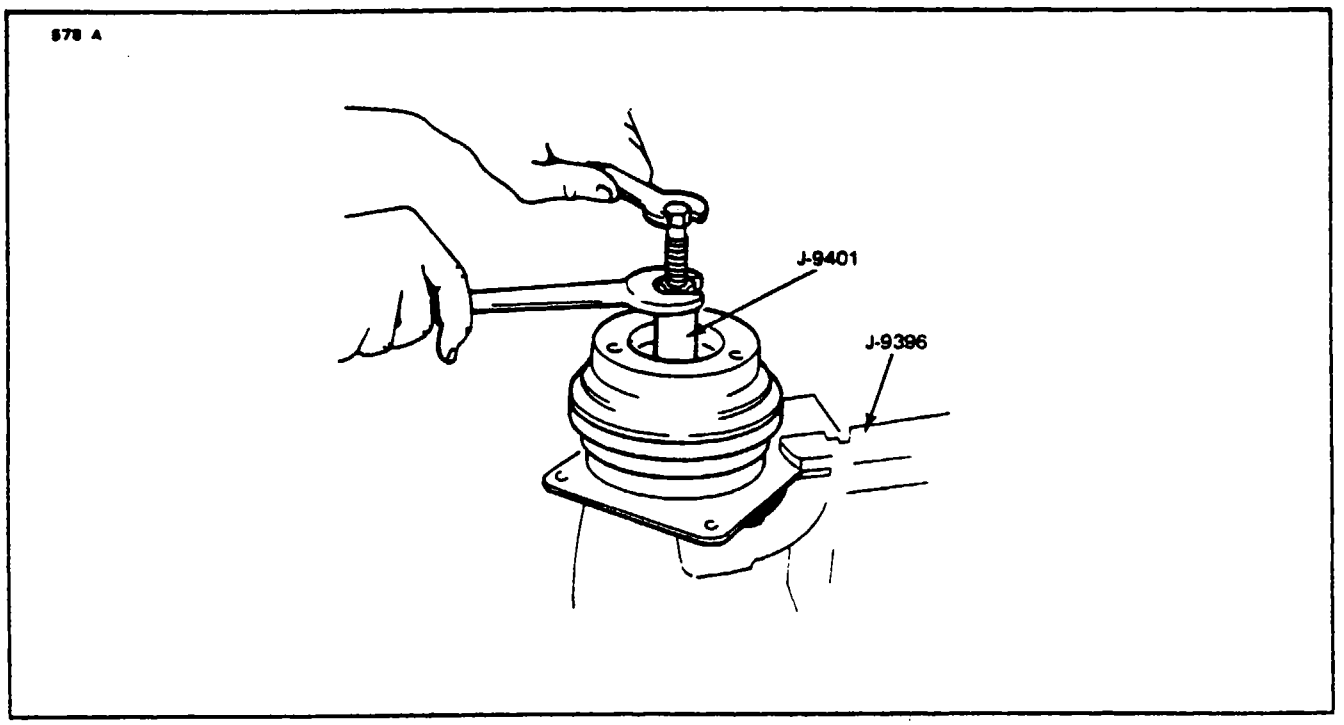

Figure 13-34. Removing Driven Plate (Frigidaire Compressor)

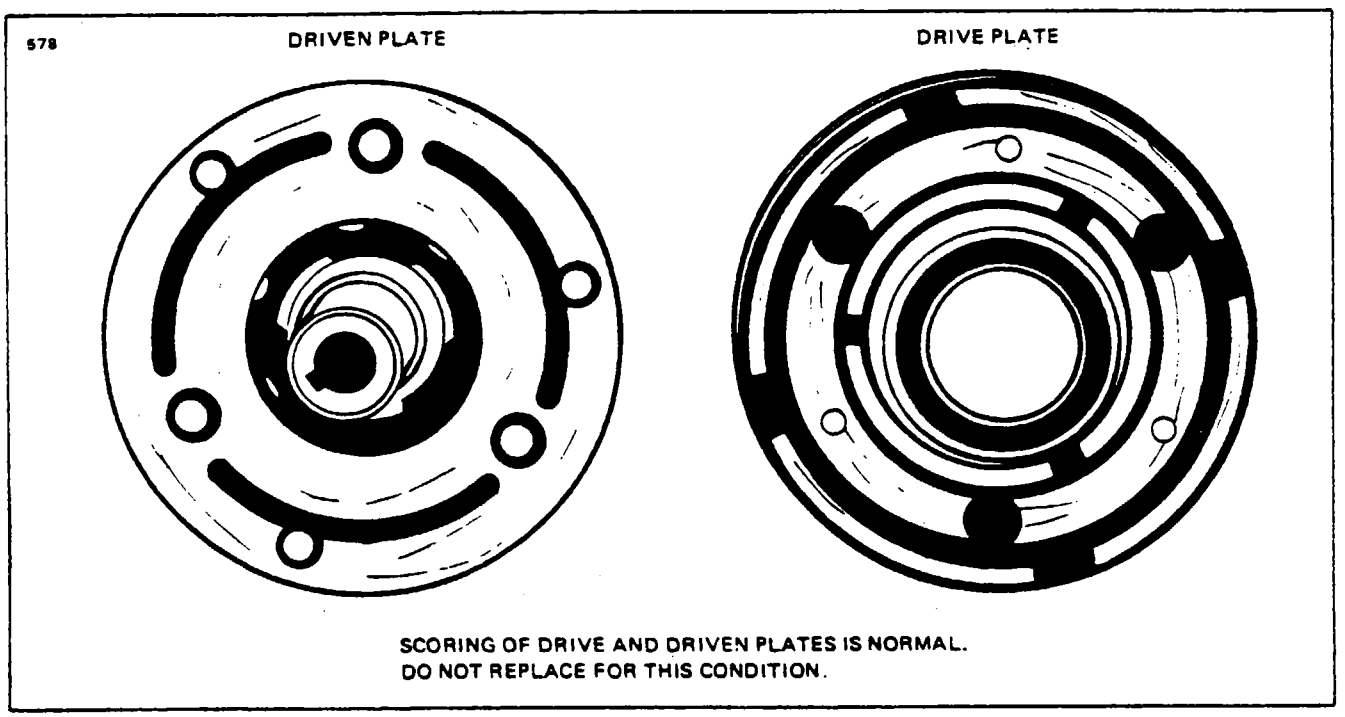

Figure 13-35. Drive and Driven Plates (Frigidaire Compressor)

579

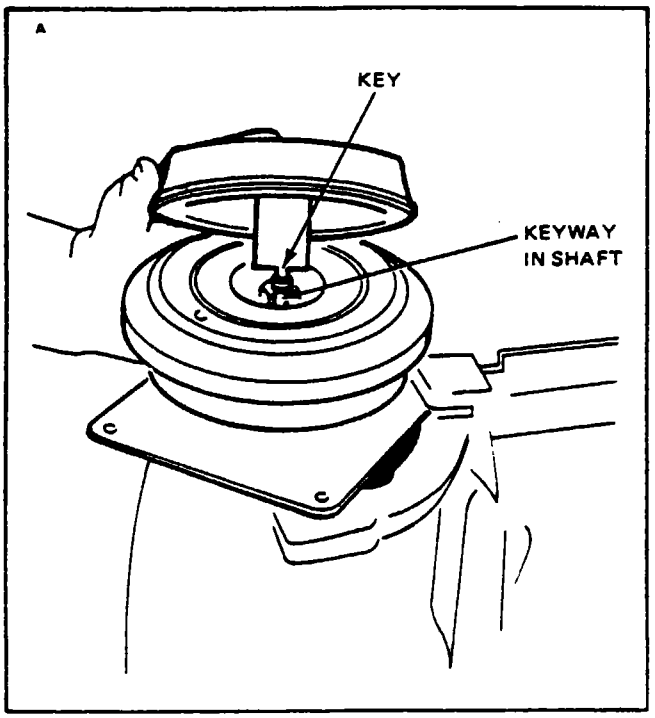

Figure 13-36. Aligning Driven Plate Key
(Frigidaire Compressor)

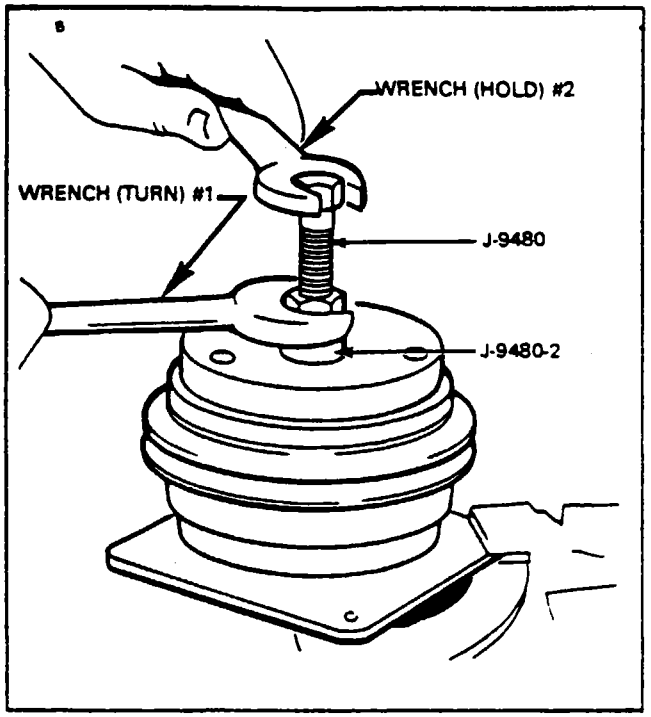

Figure 13-37. Installing Driven Plate
(Frigidaire Compressor)

580

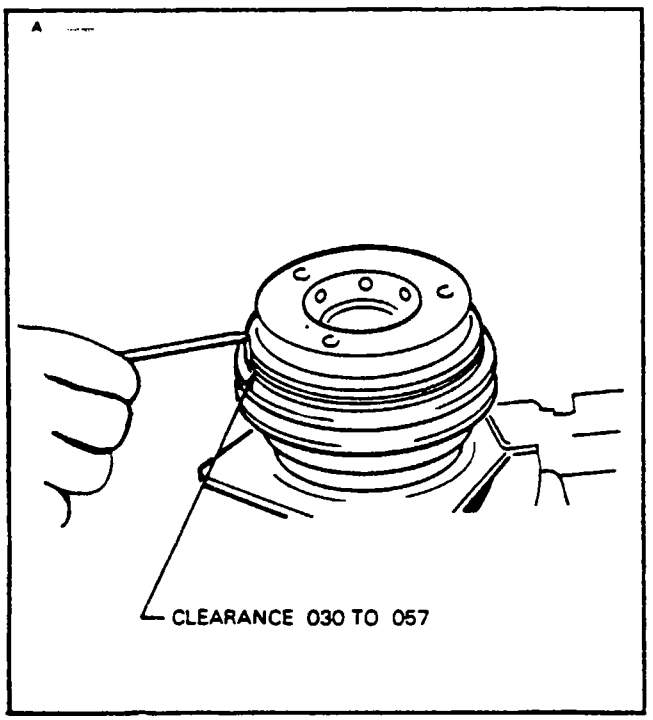

Figure 13-38. Checking Air Gap
(Frigidaire Compressor)

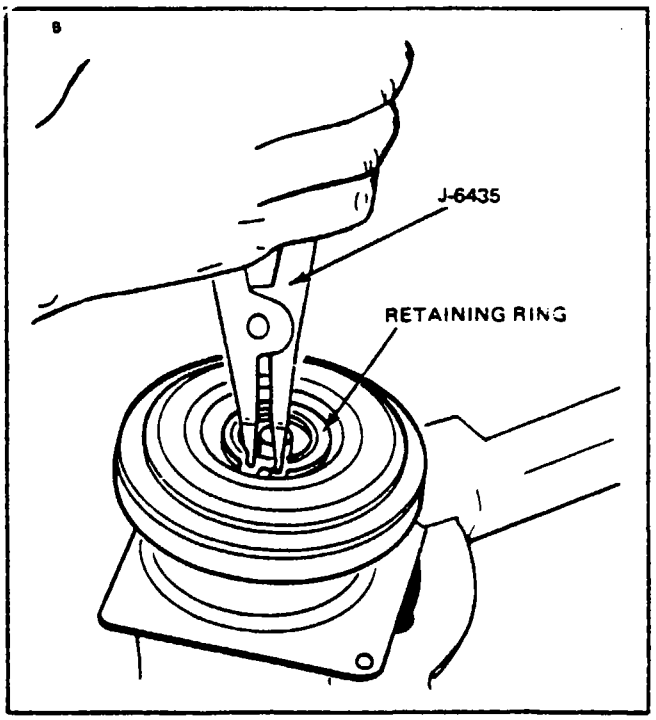

Figure 13-39. Removing Pulley Retaining Ring
(Frigidaire Compressor)

f. Rotate the front plate of the clutch so that the notch in the center of the lobe is indexed 110° from the bottom. In this position, the ball end of the top piston rod lines up with oil filler port.

g. Looking at the front plate, insert the dipstick diagonally from upper right to lower left until the stop contacts filler port surface.

h. Remove the dipstick and note the oil level (4-6 increment) on the dipstick.

13-108. MAGNETIC CLUTCH, PULLEY AND OIL (Frigidaire Compressor). (Refer to Figures 13-34 thru 13-44.)

13-109. REMOVAL OF DRIVEN PLATE AND PULLEY ASSEMBLY (Frigidaire Compressor)

a. Using a thin wall socket, remove the locknut from the compressor shaft. Use tool J-972-A to hold driven plate.

b. Install puller J-9401 into hub of driven plate. Hold main body of tool and turn forcing screw clockwise to remove driven plate. (Refer to Figure 13-34.)

c. Remove the pulley retaining ring from inside driven plate using tool J-6435 (Refer to Figure 13-39.)

d. Remove key from either the compressor shaft or the driven plate.

e. Remove pulley with puller J-8433. (Refer to Figure 13-40.)

f. Inspect driven plate for cracks or stresses in the resilient drive. Do not replace driven plate for a scoring condition. (Refer to Figure 13-35.)

g. If necessary to remove the pulley bearing, proceed as follows:

1. Remove the bearing retaining ring.
2. Drive out bearing with brass drift.
3. Install new bearing; then install retaining ring.

13-110. INSTALLATION OF DRIVEN PLATE AND PULLEY ASSEMBLY (Frigidaire Compressor)

a. Install the pulley and bearing assembly on the end of the compressor, with tool J-9481. (Refer to Figure 13-42.) The pulley should rotate freely.

b. Install the pulley retaining ring, with tool J-6435

c. Insert the square drive key into the shaft of the compressor.

NOTE

The small snap ring and spacer washer must be removed from the driven plate assembly before continuing next step.

d. Line up the key in the shaft with the keyway in the hub. (Refer to Figure 13-36.)

e. Position the driven plate installing tool J-9480-1 on the threaded end of the shaft. The "Free" washer, J-9480-2, should be in place under the hexnut on the tool. This tool has a left-hand thread on the body. (Refer to Figure 13-37)

f. Press the driven plate onto the shaft until there is approximately 1/8 inch space between the frictional faces of the clutch plates.

g. Remove installing tools.

h. Replace the snap ring and spacer washer in the driven plate assembly

i. Replace the installing tools and adjust the air gap by carefully turning wrench (1). (Refer to Figure 13-37.)

j. Remove installing tools

k. Install the locknut, using a thin wall socket. Tighten to 15 foot-pounds torque. The air gap between the friction faces should now be between .030 to .057 inch clearance. (Refer to Figure 13-38.)

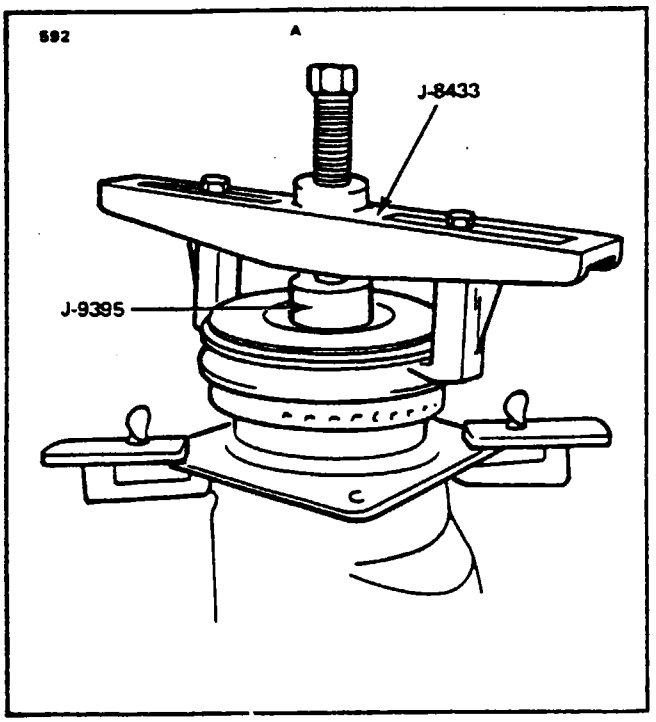

Figure 13-40. Removing Pulley and Drive Plate (Frigidaire Compressor)

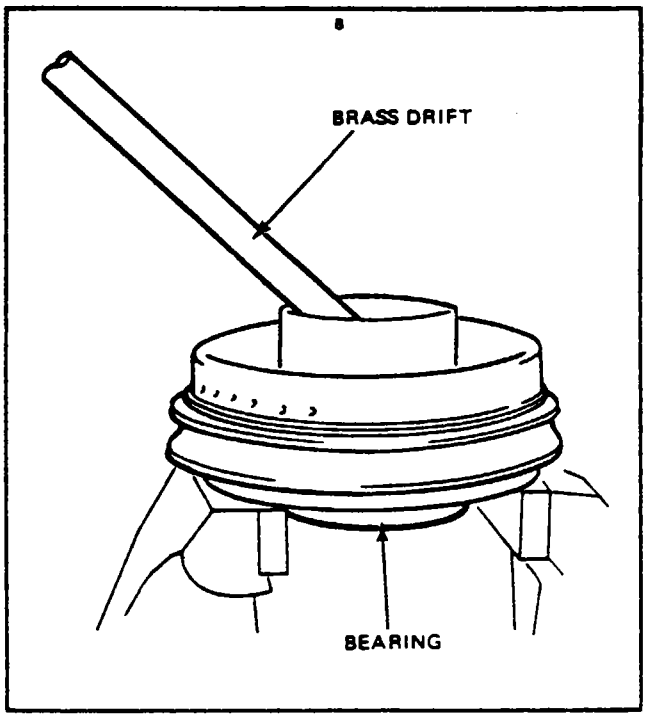

Figure 13-41. Removing Bearing (Frigidaire Compressor)

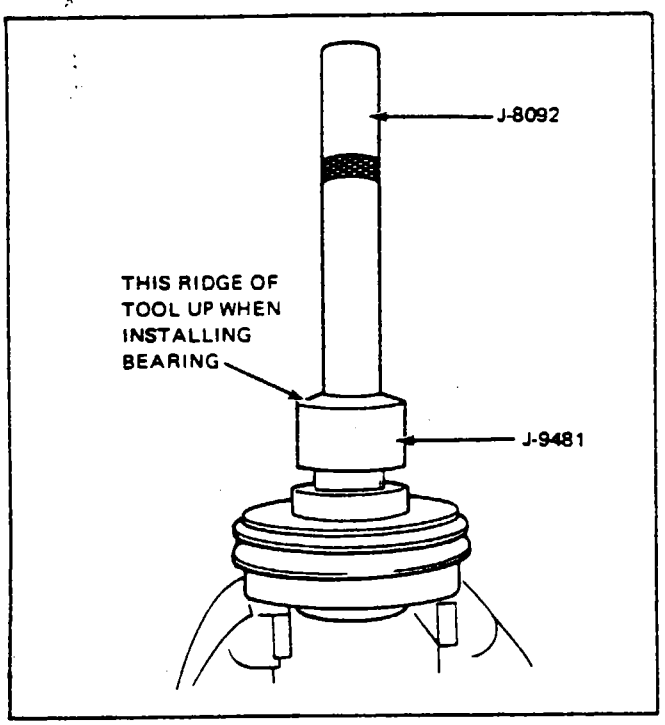

Figure 13-42. Installing Pulley and Drive Plate Bearing (Frigidaire Compressor)

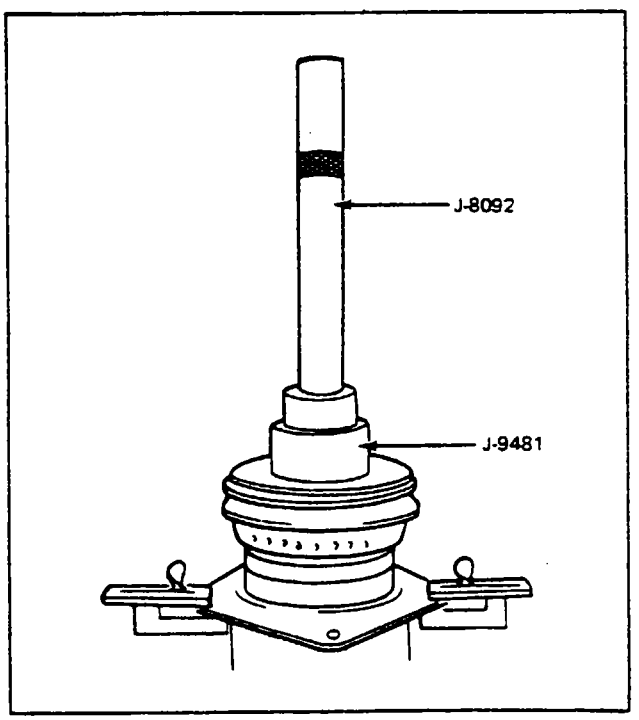

Figure 13-43. Installing Pulley and Drive Plate (Frigidaire Compressor)

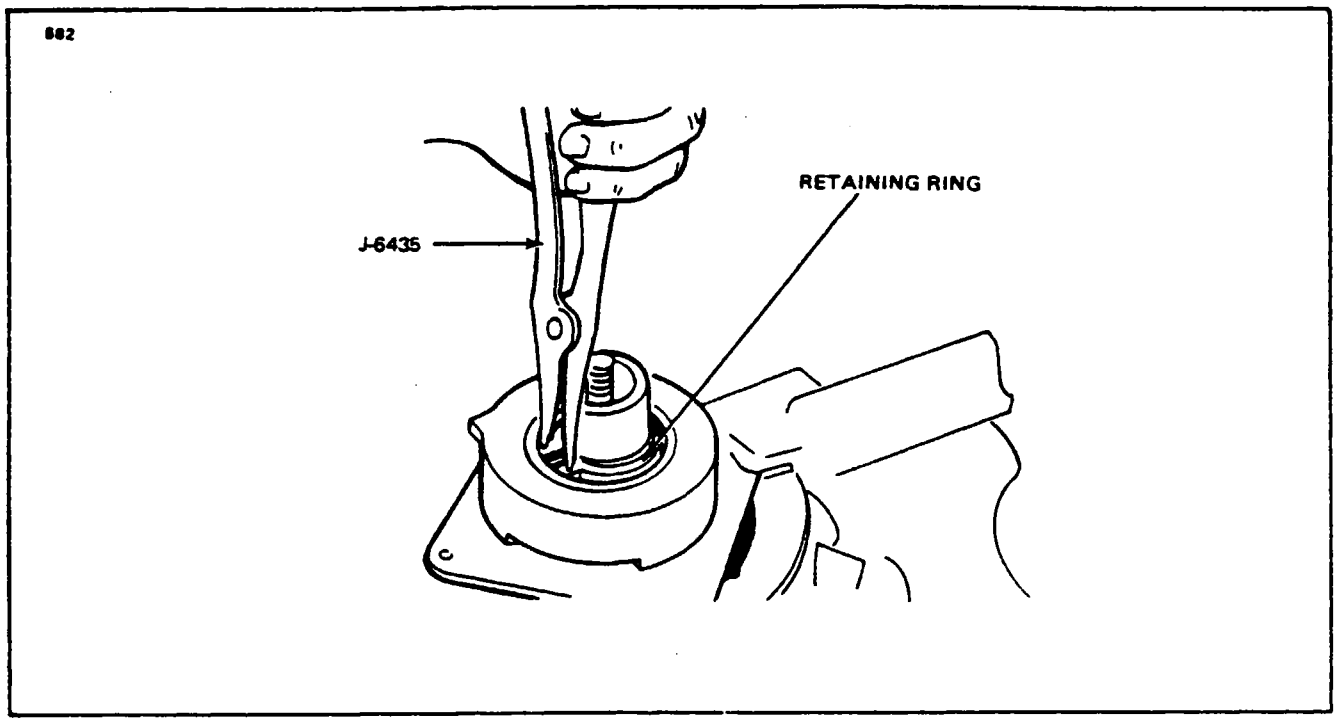

Figure 13-44. Removing Coil Housing Retaining Ring (Frigidaire Compressor)

13-111. REMOVAL OF CLUTCH COIL AND HOUSING (Frigidaire Compressor).

a. With the driven and drive plates removed, scribe the clutch coil housing retaining ring with Tool J-6435

b. Remove the clutch coil housing retaining ring with Tool J-6435.

c. Remove coil housing assembly

13-112. INSTALLATION OF CLUTCH COIL AND HOUSING (Frigidaire Compressor)

a. With the scribe marks aligned, locate the extrusions on the coil housing with the holes in the front head.

b Install the coil retainer ring with Tool J-6435.

13-112a. MAGNETIC CLUTCH, PULLEY AND COIL (Sankyo Compressor). (S N 31T-8304001 and up.)

13-112b. REMOVAL OF CLUTCH, PULLEY AND COIL (Sankyo Compressor). (Refer to Figure 13-44a.) (S N 31T-8304001 and up.)

a. Insert the two pins of the front plate spanner into any two threaded holes of the clutch front plate Hold clutch plate stationary and remove hex nut with 3/4 inch socket.

b. Remove clutch front plate using puller 32416.

1. Align puller center bolt to compressor shaft and thumb tighten the three puller bolts into the threaded holes.

2. Turn center bolt clockwise to remove front plate.

c. Remove shaft key by lightly tapping it loose with a slot screwdriver and hammer. Also remove shims.

d. Remove the external and internal snap rings by the bearing inner and outer races, respectively, with snap ring pliers

e. Remove rotor pulley assembly:

1. Insert the lip of the jaws into the snap ring groove.
2. Place rotor puller shaft protector over the exposed shaft.
3. Align thumb head bolt to puller jaws. Finger tighten.
4. Turn puller center bolt clockwise until rotor pulley is free.

g. Remove field coil.

1. Loosen coil lead wire from clip on top of compressor front housing.
2. Remove snap ring and field coil.

13-112c. INSTALLATION OF CLUTCH, PULLEY AND COIL (Sankyo Compressor). (S. N 31T-8304001 and up.)

a. Install field coil. Coil flange protrusion must match hole in front housing to prevent coil movement and correctly locate lead wire.

1. Install snap ring.
2. Position coil lead wire and secure it with clip on top of compressor front housing

b. Replace rotor pulley.

1. Using a vise, clamp the compressor rear mounting ears, never on the compressor body
2. Align rotor assembly squarely on the front housing hub.
3. Using rotor installation set, place the ring part of the set into the bearing cavity. Make certain the outer edge rests firmly on the rotor bearing outer race.
4. Place the tool set drive into the ring.
5. With a hammer, tap the end of the driver while guiding the rotor to prevent binding. Tap until the rotor bottoms against the compressor front housing hub. Listen for a distinct change of sound during the tapping process.

c. Install external and internal snap ring.

d. Replace front plate assembly.

1. Check that original clutch shims are in place on compressor shaft.
2. Replace compressor shaft key
3. Align front plate keyway to compressor shaft key.
4. Using shaft protector, tap front plate to shaft until it has bottomed to the clutch shims Note distinct sound change.

e. Replace shaft hex nut and torque to 25-30 ft.-lbs

f. Check air gap with feeler gauge to .016" to .031." If air gap is not consistent around the circumference, lightly pry up at the minimum variations. Lightly tap down at points of maximum variation.

NOTE

The air gap is determined by the spacer shims. When reinstalling or installing a new clutch assembly, try the original shims first.

g. If the air gap does not meet the specifications in Step f, add or subtract shims by repeating Steps d and e.

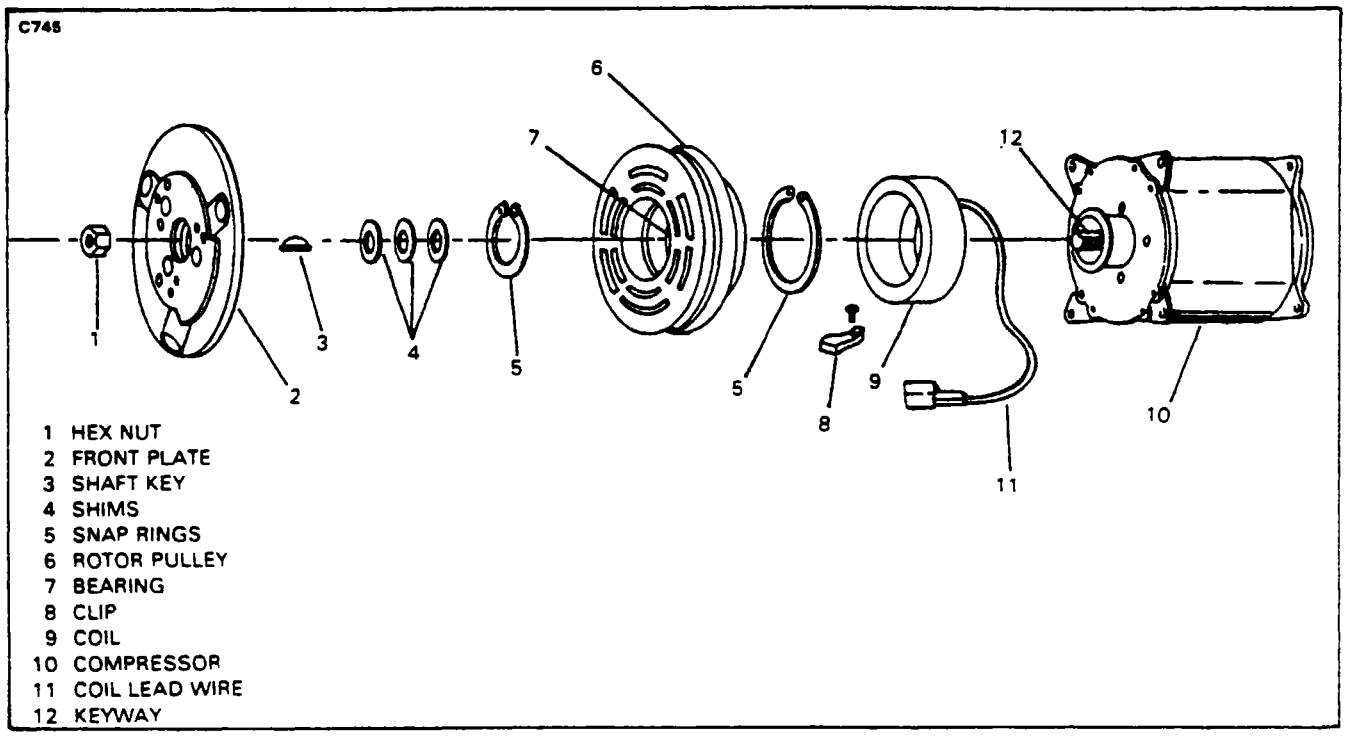

Figure 13-44a. Magnetic Clutch Assembly (Sankyo Compressor) (S/N 31T-8304001 and up)

13-113. SINGLE BELT COMPRESSOR DRIVE.

13-114. REMOVAL OF DRIVER ASSEMBLY FOR BELT REPLACEMENT. It will be necessary to remove the end housing assembly to change the belt. This can be accomplished by the following procedure: (Refer to Figure 13-45.)

a. Remove cowling from right engine. (Refer to Section VIII.)

b Relieve the Compressor drive belt tension by loosening the locknut on the adjustment rod and backing of the adjustment.

c. Remove all of screws (1) and (6) from end housing assembly.

d. Remove the bushings from screws (6) and replace screws (6) in the tapped holes marked "P."

e. Turn puller screws (6) in until slight bottom pressure can be felt.

f. Continue turning screws (6) in 1/4 turn at a time, until they have extracted the end housing assembly and shaft assembly. (The quill shaft is attached to the pulley assembly with snap ring (7) and will be drawn out as a unit.)

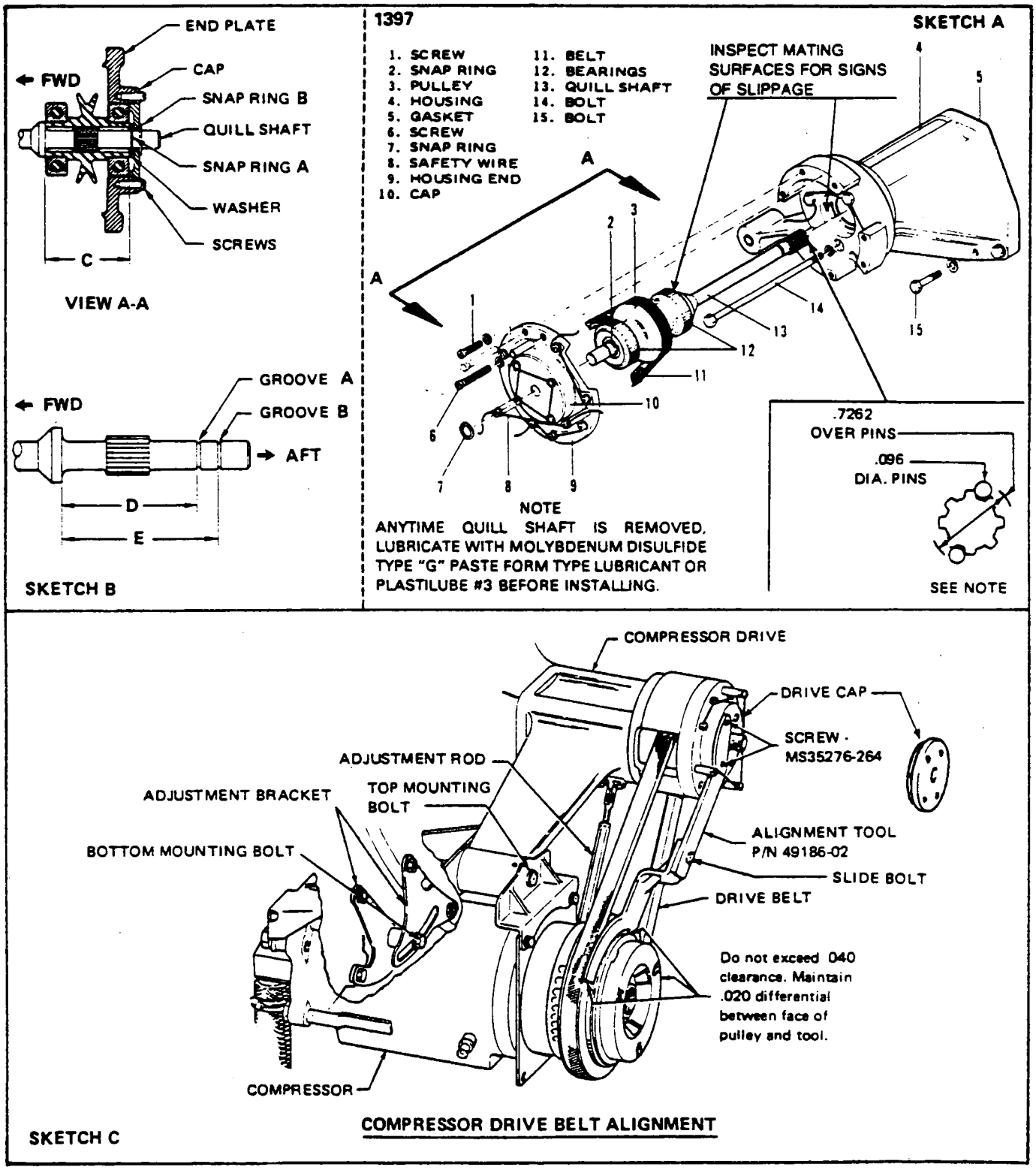

Figure 13-45. Drive Housing and Drive Assembly

NOTE

ANY TIME the quill shaft is removed, lubricate with Molybdenum Disulfide, Type "G", paste form type lubricant or Plastilube #3 before reinstalling.

g. Replace old belt with new DAYCO Belt #5-8862. Refer to Belt Inspection in Paragraph 13-104.

13-115. INSPECTION AND REPAIR OF COMPRESSOR DRIVE. (Refer to Figure 13-45.)

a. Remove compressor drive belt. Refer to Removal of Driver Assembly for Belt Replacement.

b. Inspect the cap for evidence of rubbing on cap under snap ring B. If there is evidence of galling or rubbing under the snap ring, spot face the aft side 1 in. dia x .060 deep.

c. Inspect the inner snap ring and washer for security, if faulty replace these parts. Use Waldes Kohinoor Snap Ring P/N 5160-47.

d. Inspect the quill shaft end play, it should not exceed .005 of an inch. If more than .005 inch end play is found, remove the shaft and inspect the complete shaft for spline wear and snap ring groove condition. If the shaft is worn or faulty, replace.

e. Inspect the inter spline of the engine drive gear for wear tolerance. Refer to Pratt and Whitney Aircraft of Canada LTD, Service Manual, Part 3, Section 3.

f. Inspect the Quill shaft (13) for broken or damaged splines and spline wear. Measure spline wear by using two .096 inch diameter pins. The dimension across the pins should be not less than .7262 inch. Replace shaft if dimensions are less then indicated.

g. Inspect the ball bearings for flat spots by slowly rotating the bearings, if found defective, replace the bearings.

h. If the shaft is in good condition, but the end play is more than .005, and/or the snap rings or grooves are deformed it will be necessary to re-machine the snap ring groove and install a Waldes Kohinoor Snap Ring No. 5160-47 per the following instructions: (Refer to Sketch B.)

1. Measure dimension (C) which is the distance from the outer faces of both bearings
2. Measure thickness of washer used with inner snap ring (A).
3. Re-machine snap ring groove (A) so that the forward edge of groove (A) on dimension (D) equals dimension (C) plus the washer thickness (+.005/-.000). Groove dimensions are as follows .442/.445 minor dia. and .046/.049 width.
4. If the snap ring groove (B) is damaged, re-machine it to accept the heavier snap ring, holding dimension (E) at 2.729 + .010/-.000.

I. Clean any paint from the cap and housing mating surface.

j. In both the housing and end plate inspect bearings for looseness, they should be a press fit on early models and Loctited in place on later models.

k. If the bearings show signs of rotation within the housing or end plate, or if by measurement the housing or end plate bore is eccentric by more than .005 total indicator runout, it will be necessary to replace the housing and bearing.

l. When the bearings are replaced in new housing, Loctite "E" should be used on the outer surface of the bearing only.

m. With the drive unit assembled and the belt installed, proceed to check belt alignment as follows:. (Refer to Sketch C).

1. Remove two compressor drive cap attachment screws as shown in Figure 13-45. Retain these screws and washers.

2. Attach the alighment tool P/N 49186-02 to the compressor drive by using two MS35276-264 screws.

3. Tighten the attaching screws, making certain the tool is clear of all obstructions and lightly tighten the slide nut and bolt on the tool.

4. Tighten the compressor drive belt by pulling the compressor by hand.

5. While maintaining belt tension tighten the bottom attachment bolt.

6. Reattach the adjustment rod to the compressor and adjust to achieve the proper belt tension and pulley alignment. (Refer to Table XIII-IX.)

NOTE

When acquiring belt tension, maintain even clearance between the face of the compressor pulley and alignment tool.

7. Tighten the top mounting bolt on the compressor.

8. Should it be necessary to move the pulleys forward or aft to achieve alignment, the support end of the housing can be milled up to .09 of an inch on either side and an aluminum or steel shim washer used to adjust the compressor position.

n. With the alignment completed, remove the alignment tool and reinstall the drive cap with original screws and washers. Safety wire the screws.

13-116. DUAL BELT REPLACEMENT

a. Remove cowling from right engine. (Refer to Section VIII.)

b. Relieve the compressor drive belt tension by loosening the locknut on the adjustment rod and backing of the adjustment.

c. Replace old belts with Drive Belt Kit Assembly, P/N 470 980. The dual belts are a matched set and must be replaced as a set. (Refer to Belt Inspection, Paragraph 13-104.)

NOTE

Do not handle the belts with greasy hands. The belts should be kept free from degreasing solvents, oils or any other foreign material.

NOTE

Wipe pulley shives with solvent before belt installation.

d Tighten the compressor drive belt by pulling the compressor by hand.

e. While maintaining belt tension tighten the bottom attachment bolt.

f. Reattach the adjustment rod to the compressor and adjust to achieve the proper belt tension and pulley alignment. (Refer to Table XIII-IX.)

g. Tighten the top mounting bolt on the compressor.

13-117. INSTALLATION OF DRIVER ASSEMBLY. (Refer to Figure 13-45.)

NOTE

Anytime quill shaft is removed, it must be lubricated per Lubrication Chart, Section II.

a. Install quill shaft back in the housing assembly.
b. Insert the long puller screws (6) into the holes located counterclockwise from holes marked "P".
c. Begin to tighten screws (6) 1/4 turn at a time in sequence until they bottom.
d. At this time, remove puller screws (6) and replace with the attaching screws (1).
e. Tighten attaching screws (1) 1/4 turn at a time in a crossing sequence until the end housing assembly is drawn into place.
f. Replace bushing and puller screws (6) into holes marked "P" and safety wire all screws.

NOTE

On dual belt assemblies, install pulley on quill shaft and secure with hardware previously removed. Hold the belts with one hand while tightening the nut. DO NOT snap wrench.

13-118. REMOVAL OF DRIVE HOUSING. (Refer to Figure 13-45.)
a. Refer to Removal of Driver Assembly, Steps a through d.
b. Cut safety wire and remove bolts (14) and (15).
c. Remove housing and gasket.

13-119. INSTALLATION OF DRIVE HOUSING. (Refer to Figure 13-45.)
a. Install gasket and housing to engine pads with bolts (14) and (15). Torque bolts (oiled) 50-60 inch-pounds maximum and safety wire.
b. For installation of driver assembly, refer to Installation of Driver Assembly, Steps a through f.

13-120. FAN AND CONDENSER.

13-121. REMOVAL OF FAN AND CONDENSER. (Refer to Figure 13-46.)
a. Remove cowling and access panels on each side and on top of the nacelle.
b. Ascertain that the air conditioning system circuit breaker is pulled.
c. Discharge the system.
d. Disconnect the freon lines at the condenser.
e. Disconnect the electrical leads from the fan.
f. Remove the clamp from the fan motor.
g. Loosen the set screw on the fan and slide the fan aft and off the shaft.
h. Disconnect the bracket from the fire wall and remove the fan motor and fan blades from the nacelle.
i. Disconnect the hardware holding the condenser.
j. Remove the condenser from the nacelle.

NOTE

If new condenser is being installed add 2 ounces of refrigerant oil to the condenser and add an identifying mark (red dot) to indicate oil added.

C743
1 FREON LINES
2 SHROUD
3 CONDENSER
4 SET SCREW
5 IMPELLER FAN
6 MOTOR MOUNTS
7 CLAMP
8 ELECTRICAL LEADS
9 MOTOR
10 MOUNTING BOLTS
11 FIRE WALL
12 THERMAL SWITCH
13 OVERPRESSURE SWITCH (SEE NOTE 2)
14 HIGH PRESSURE SWITCH (SEE NOTE 2)
15 CONDENSER INLET LINE

NOTES

1 SEAL ALL OPENINGS ON INBOARD AND OUTBOARD LONGITUDINAL BULKHEAD BETWEEN AFT SIDE OF FIRE WALL AND FORWARD SIDE OF CONDENSER WITH PRESSURE SENSITIVE ADHESIVE TAPE. SPECIFICATION PPP-T-60B. TYPE III. CLASS I. 1-1/2 INCH WIDE FROM TUCK PROD 2144 CYPRESS ROAD. BETHLEHEM. PENNA

2 OVERPRESSURE SWITCH ON AT 375 ± 10 PSI AND OFF AT 200 ± 10 PSI THERMAL SWITCH ON AT 170°F AND OFF AT 150°F

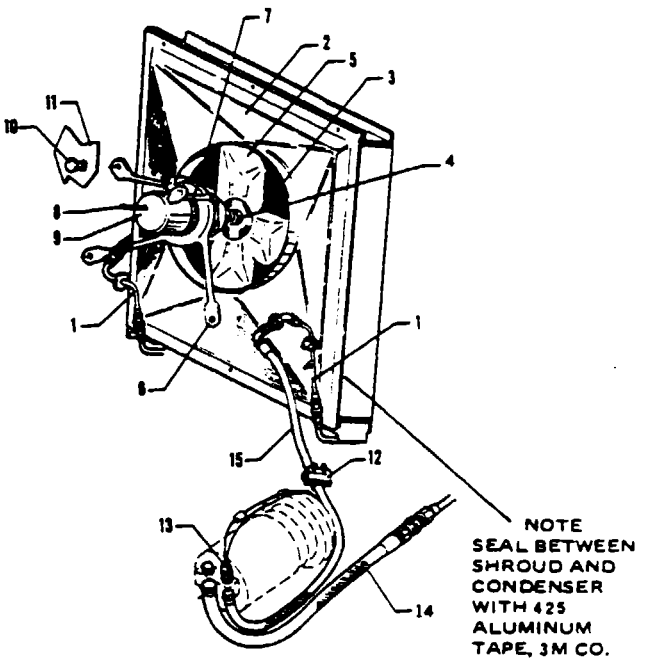

Figure 13-46. Fan and Condenser

THIS SPACE INTENTIONALLY LEFT BLANK

13-122. INSTALLATION OF CONDENSER AND FAN. (Refer to Figure 13-46.)

NOTE

Refer to the latest revision of Piper Service Bulletin No. 754 for information on replacement of the condenser fan impeller.

a. Install condenser and secure.
b. Connect the fan motor and bracket to the fire wall.
c. Slide the fan on the shaft and position the end of the fan hub approximately 1.88 inches from the condenser and secure with the set screw.
d. Install the clamp on the fan motor.
e. Connect the electrical leads.
f. Connect the freon lines at the condenser.
g. Evacuate and charge the system and check for leaks.
h. Engage the air conditioning circuit breaker.
i. Install the cowling and access panels.

13-123. RECEIVER-DRYER

13-124. REMOVAL OF RECEIVER-DRYER. This unit is located next to the evaporator in the nose section of the aircraft.

a. Remove the right access panel on the nose section.
b. Discharge the system of all refrigerant before continuing with the removal of the receiver-dryer. Disconnect the refrigerant lines at the receiver-dryer and cap the ends of the lines to prevent contamination of the system
c. Loosen the two clamps and remove the receiver-dryer from its mounting bracket

NOTE

This part is not serviceable. It must be replaced with a new one. (Refer to Parts Catalog.)

13-125. INSTALLATION OF RECEIVER-DRYER.

a. Mount the new dryer in the mounting bracket and ascertain that the proper parts are facing the appropriate freon lines.

b. Install new O-rings (refer to the Parts Catalog) on the line fittings and lubricate the O-rings.

c. Uncap and connect the refrigerant lines to the dryer.

CAUTION

Torque the fittings. (Refer to Table XIII-VII.)

d. Evacuate and recharge the system in accordance with Paragraphs 13-99 and 13-100.

e. Install the right access panel on the nose section of the airplane.

13-126. EXPANSION VALVE.

13-127. REMOVAL OF EXPANSION VALVE. (Refer to Figure 13-47.)

a. Remove the access panel on the right side of the airplane nose section.

b. Discharge the system before trying to remove any components.

c. Remove the evaporator, shroud, receiver-dryer, and related hardware from the airplane. (Refer to Paragraphs 13-122 and 13-131.)

d. With the evaporator removed, it is now possible to remove the expansion valve.

CAUTION

Do not kink the capillary tube during removal.

13-128. INSTALLATION OF EXPANSION VALVE. (Refer to Figure 13-47.)

a. Install the expansion valve to the evaporator and secure the capillary tube to the evaporator outlet line and apply Presstite insulating tape. (Refer to Figure 13-49.)

CAUTION

Do not kink the capillary tube during installation.

b. Install the assembled evaporator into the airplane. (Refer to Paragraph 13-132.)

c. When all the connections are secured and the Presstite insulating tape is installed, proceed to evacuate and charge the system. (Refer to Paragraphs 13-99 and 13-100.)

d. After charging the system, it should be checked for any leaks. (Refer to Paragraph 13-98.)

e. Install the access panel on the right side of the nose section.

13-129. EVAPORATOR CONTROL VALVE.

13-130. REMOVAL OF EVAPORATOR CONTROL VALVE. (Refer to Figure 13-48.)

a. Remove the access panel on the right side of the nose section.

b. Discharge the system before trying to remove any of the components.

c. Remove the insulating tape from around the evaporator control valve.

d. Disconnect the lines from the evaporator control valve and cap the open ends.

e. Disconnect the clamp which holds the evaporator control valve to the evaporator shroud and remove the valve from the airplane.

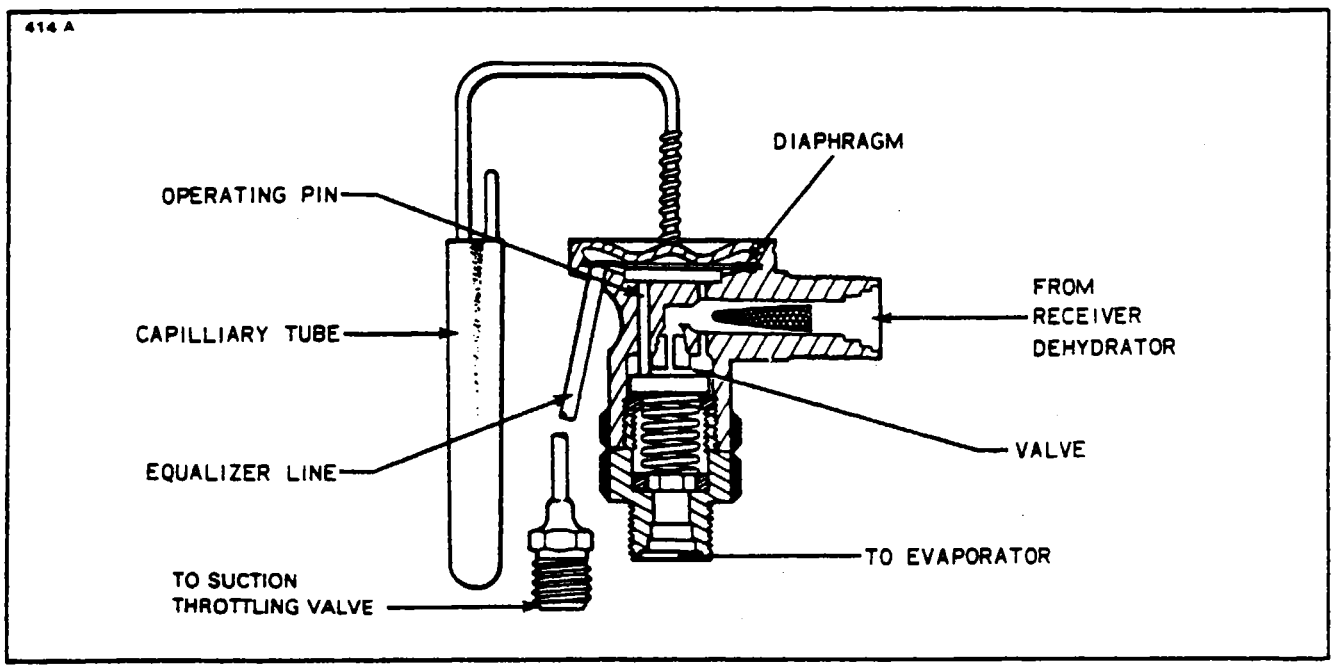

Figure 13-47. Expansion Valve

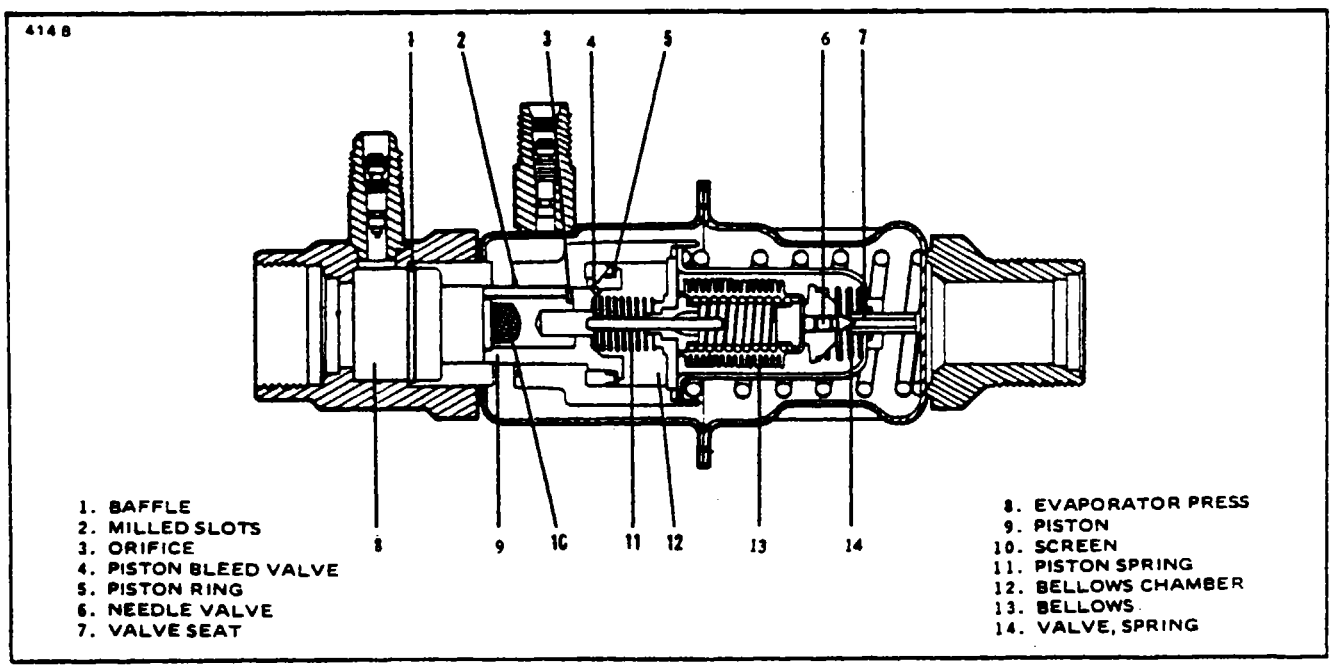

Figure 13-48. Evaporator Control Valve

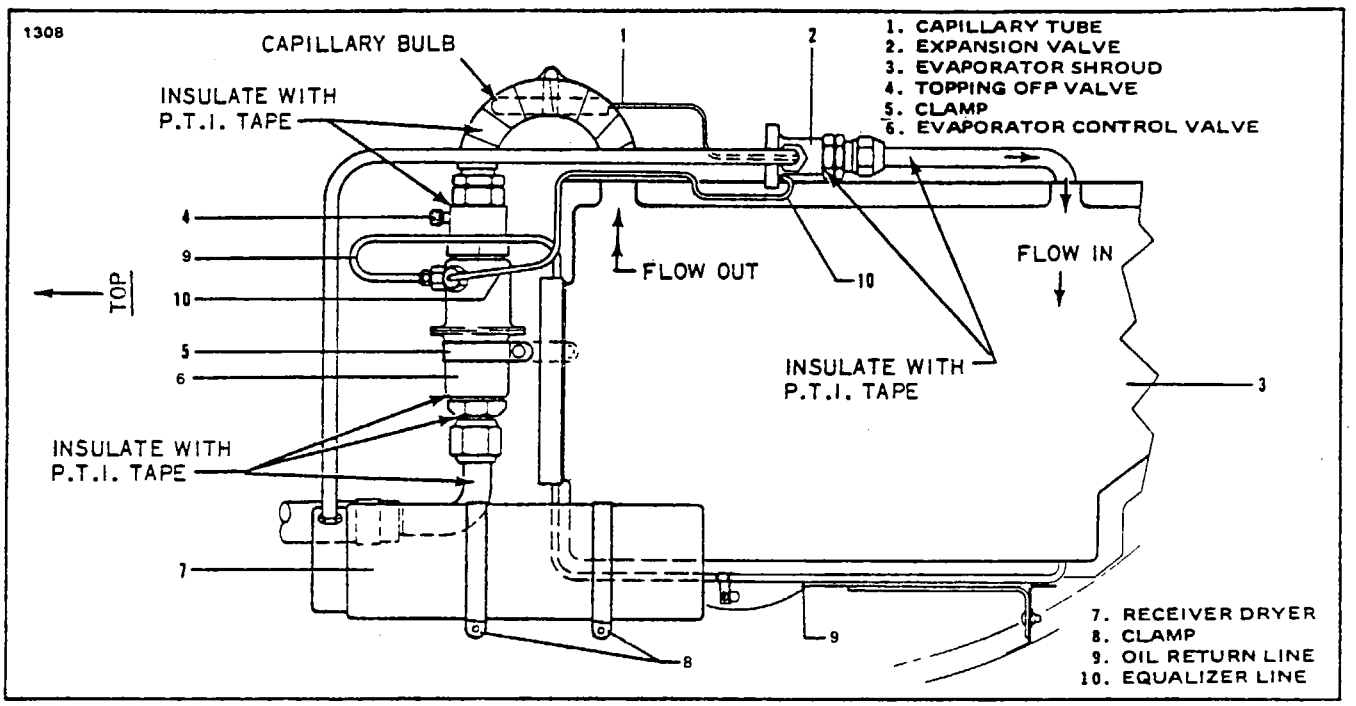

Figure 13-49. Component Installation

13-131. INSTALLATION OF EVAPORATOR CONTROL VALVE. (Refer to Figure 13-48.)

a. Install the evaporator control valve into the airplane as shown in Figure 13-49 and secure it to the evaporator with the existing clamp and connect the freon lines to the valve.

b. Apply the Presstite insulating tape around the valve and related lines as shown in Figure 13-49

c. Evacuate and charge the system in accordance with Paragraphs 13-99 and 13-100.

d. Test the system for leaks. (Refer to Paragraph 13-98.)

e. Install the access panel on the airplane and secure it.

13-132. EVAPORATOR.

13-133. REMOVAL OF EVAPORATOR. This unit is mounted in front of the heater and is enclosed in a fiberglass shroud.

a. The air conditioning system must be completely discharged of refrigerant.

b. Remove the air conditioning duct extending over the heater from the evaporator shroud.

c. Disconnect the forward V-band clamp between the heater and evaporator shroud.

d. Remove the four screws which hold the evaporator in place.

e. Disconnect the refrigerant lines from the receiver-dryer and loosen the clamps and remove the dryer.

f. Remove the insulation on the evaporator control valve and disconnect the refrigerant line which leaves the evaporator control valve.

NOTE

It is advisable to cap all open refrigerant lines when the system is opened to prevent entrance of moisture and dirt.

g. Remove the recirculation fan in accordance with Paragraph 13-32.

h. Open the access plate on the airplane below the evaporator shroud and disconnect the pressurized air inlet line to the shroud. The removal of the heater assembly would expedite the removal of the evaporator.

i. The complete shroud, evaporator, evaporator control valve, and expansion valve can now be lifted out of the compartment for service.

j. The shroud can be separated to remove the evaporator by removing the machine screws and nuts around the edges of the shroud.

13-134. INSTALLATION OF EVAPORATOR. If installing a new evaporator, add an amount of refrigerant oil equal to the amount removed from the old unit (not, however, to exceed 2 ounces). After addition of the oil proceed with installation as follows:

a. Secure the two halves of the shroud together around the evaporator with machine screws and nuts, if it was separated. Apply a bead of fuselage sealant between the two halves before securing them. Unit must not leak as it forms part of the Pressurization Envelope.

NOTE

Before installing new O-ring seal, lubricate the O-rings with refrigerant oil and torque the fittings. (Refer to Table XIII-VII.)

b. Install the expansion valve and evaporator control valve to the evaporator shroud as shown in Figure 13-49.

c. Install the complete shroud, evaporator, evaporator control valve, and expansion valve into the airplane.

d. Connect the pressurized air line to the lower end of the evaporator shroud and secure with clamp. Also, route the drain hose through the grommet in the fuselage.

e. Install the recirculation fan in accordance with Paragraph 13-32.

f. Connect the refrigerant lines to the evaporator control valve and replace P.T.I. Presstite Insulation Tape around the evaporator control valve.

g. Install a new receiver-dryer in the mounting bracket and secure it in place with two clamps.

h. Connect the other refrigerant lines to the receiver-dryer.

i. Move the evaporator shroud assembly aft till it is tight against the end of the heater; then install the four screws to secure the shroud assembly in place. (Do not tighten mounting screws until V-band clamp is installed.)

j. Install and secure the V-band clamp around the end of the heater and evaporator shroud.

k. Install the air conditioning air duct over the heater and secure it to the evaporator shroud outlet.

l. Evacuate and recharge the system in accordance with Paragraphs 13-99 and 13-100

m. Install the access plate and panels on the nose section of the airplane.

13-135. INSTALLATION OF LINES AND FITTINGS. Freon because of its chemistry, is difficult to confine with rubber hoses and seals. For this reason an acceptable leak rate has been established, and due to temperature and system operation the leak rate will vary. Following are some areas of the system which should be inspected to prevent freon leaks:

a. If leaks are suspected, inspect the flares carefully for tool marks and that the flares do not extend over the fitting collar. (Refer to Figure 13-51.)

NOTE

Hoses should not be removed from the compressor fittings unless they are suspected of damage or leaks. Repetive removal will damage the hose to fitting seal and thus cause leaks.

NOTE

Reseal joints with Loc-Tite sealer.

b. An area that is subject to damage due to nut over torque is shown in Figure 13-51. Inspect this line for twist or kinks by looking thru the inboard grill with a flashlight. An alternate method of tightening "B" nuts in lieu of torque values is as follows:

1. Hand tighten "B" nut while moving the tube from side to side. This will aid in the seating of the nut and flare to the nipple.
2. With the proper wrench, tighten the nut ¼ turn.
3. Loosen the "B" nut and repeat Steps 1 and 2.

c. Flared fittings are sometimes difficult to seal on the hard-to-get fittings, it may be necessary to install Seco 7 seals. (Refer to Figure 13-50.) Install Seco 7 seals as follows:

1. Lubricate threads with refrigerant oil.
2. Run nut back and forth on fitting and then tighten finger tight.
3. From the finger tight position tighten flared fitting 1 to 1½ hex flats.
4. If connection is broken, replace seal.

CAUTION

When installing conical seals check for cracks and scored flared ends and nipple ends. Replace parts as necessary.

d. After assembly or replacement of components, the component and lines should be flushed with freon. (Refer to flushing Paragraph 13-101.)

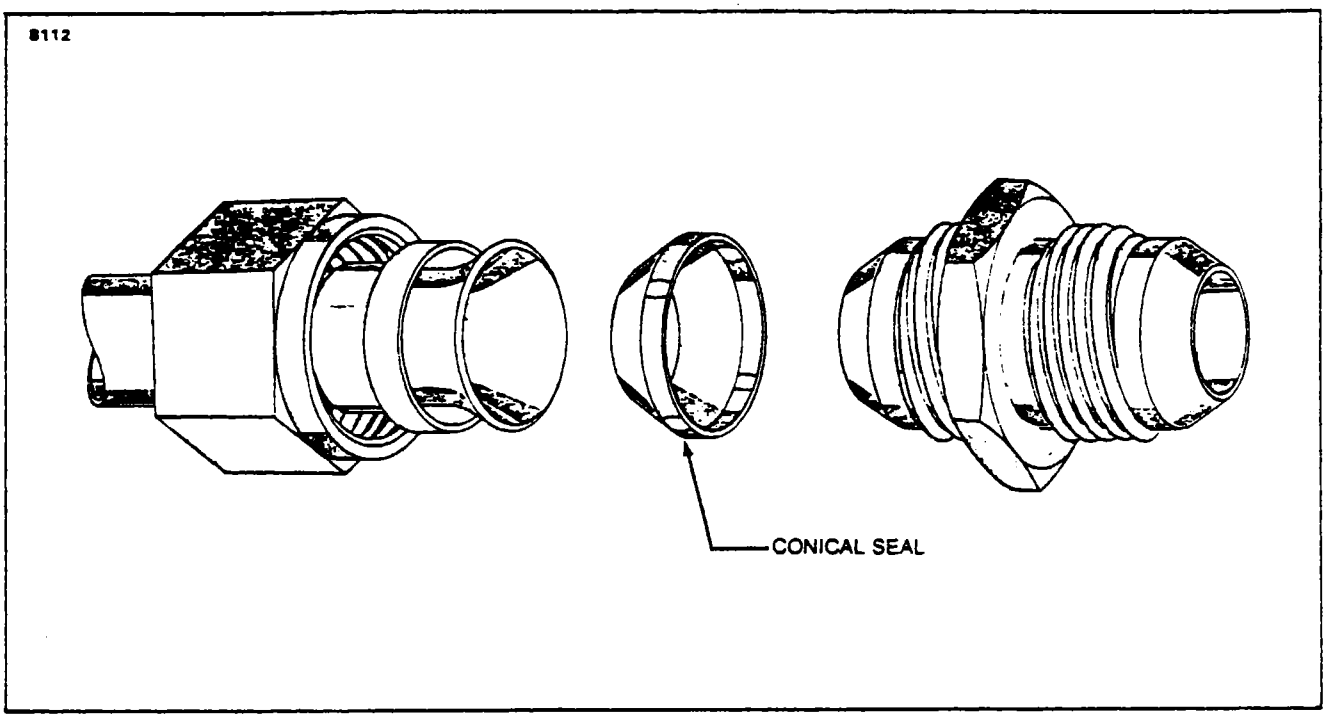

Figure 13-50. Installation of Seco 7 Seals

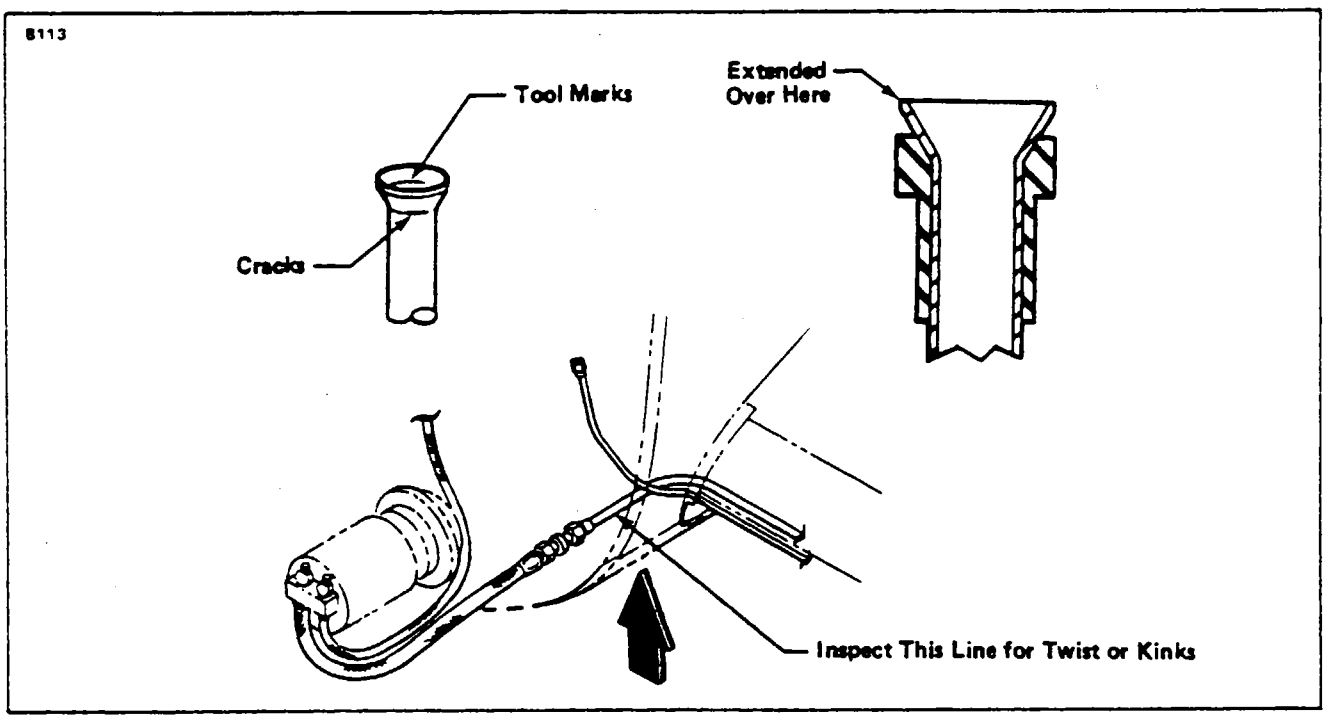

Figure 13-51. Inspection Points (Air Conditioning System)

TABLE XIII-X. TROUBLESHOOTING CHART (AIR CONDITIONING)

Gauge Indication	Probable Causes	Remedy
High discharge pressure.	Overcharge of refrigerant.	Purge excess refrigerant.
	Air in system.	Check for leaks. Bleed charge from system. Evacuate and recharge system.
	Overheated condenser due to blocking air passage.	Clean bugs and dirt from condenser fins. Straighten fins if bent.
	Flooded evaporator indicated by heavy frosting on suction line and compressor suction service valve.	Check that capillary bulb is securely clamped to suction line. If capillary bulb OK, replace expansion valve.
	Restriction in liquid line from condenser.	Check for kinked hoses and stopped up filter.
Low discharge pressure.	Undercharge of refrigerant. Sight glass shows bubbles or foam.	Add refrigerant until bubbles disappear. Check system leaks.
	Damaged compressor valves or dirt under valves.	Replace compressor.
	Blown gasket.	Replace compressor.
	Damaged compressor. Worn or broken piston or piston rings.	Replace compressor.

TABLE XIII-X. TROUBLESHOOTING CHART (AIR CONDITIONING) (cont.)

Gauge Indication	Probable Causes	Remedy
Low suction pressure. (Accompanied by icing evaporator.)	Low air supply through evaporator.	Repair blower or blower motor. Clean stoppage in air ducts.
	Faulty evaporator control valve.	Replace evaporator control valve.
	Very dirty evaporator fins and coils.	Clean and flush with water.
Low suction pressure. (Evaporator not cold enough.) Suction gauge may read a vacuum indicating evaporator lacks refrigerant.	Undercharge of refrigerant. Moisture freezing in expansion valve. Valve will show frost. Expansion valve inlet screen clogged. Inoperative expansion valve. Valve stuck closed or capillary bulb has lost its charge.	Add Freon. Install new dryer. Evacuate and recharge system. Remove screen. Clean with solvent and replace. Warm capillary by holding in hand. If suction pressure does not change, replace expansion valve.
	Restriction anywhere in liquid line. Restriction will show frost.	Locate restriction and repair.
High suction pressure.	Capillary bulb clamp loose on suction line. Suction line shows frost.	Clean contact surfaces of suction line and cap bulb. Tighten clamp.
	Expansion valve not closing. Evaporator flooded. Suction line frosted to compressor.	Replace expansion valve.

TABLE XIII-X. TROUBLESHOOTING CHART (AIR CONDITIONING) (cont.)

Gauge Indication	Probable Causes	Remedy
High suction pressure. (cont.)	Compressor drive belt slipping.	Adjust belt tension.
	Magnetic clutch slipping	Check electrical circuit for correct voltage to clutch coil. Clean clutch surfaces of oil.
	Check air gap (Sankyo).	Adjust air gap.
	Strainer at suction service valve clogged.	Clean with solvent and or replace.
	Leaking or broken compressor valves.	Replace compressor

TABLE XIII-X. TROUBLESHOOTING CUSTOMER COMPLAINTS (AIR CONDITIONING SYSTEM)

Trouble	Indication	Cause	Suggested Remedy
System produces no cooling.	Electrical Electrical components not operating.	Open circuit breaker.	Reset circuit breaker.
	Electrical components not operating.	Broken or disconnected electrical wire.	Check all terminals for loose connections; check wiring for hidden breaks.
	Electrical components not operating.	Broken or disconnected electrical wire.	Check ground wire to determine if loose, broken or disconnected.
	Compressor clutch inoperative.	Clutch coil burned out or disconnected.	Check current flow to clutch, replace if inoperative.
	System does not work in auto mode.	Thermostat sensing element defective.	If system works in manual mode, check thermostat and cabin comfort control panel.
	Fan inoperative.	Circulating fan motor disconnected or burned out.	Check current flow to fan motor; repair or replace as required. (Refer to Paragraph 13-34.)
	Mechanical Visual inspection.	Loose or broken drive belt.	Replace drive belt and/or tighten to specifications.
	Compressor pulley will not turn when clutch is engaged.	Compressor partially or completely frozen.	Remove compressor for service or replacement.
	Head pressure normal, suction pressure high, evaporator flooding.	Expansion valve stuck in open position.	Replace expansion valve.

TABLE XIII-X. TROUBLESHOOTING CUSTOMER COMPLAINTS (AIR CONDITIONING SYSTEM) (cont.)

Trouble	Indication	Cause	Suggested Remedy
System produces no cooling. (cont.)	Refrigeration Complete loss of refrigerant.	Broken refrigerant line.	Examine all lines for evidence of breakage by external stress or rubbing wear.
	No pressure on high or low gauges.	Leak in system.	Evacuate system; apply static charge; check system for leaks and make necessary repairs.
	Clutch and compressor oily; system low or out of refrigerant.	Compressor shaft seal leaking.	Replace compressor.
	High gauge normal or may read high. Low gauge usually shows vacuum or very low pressure reading. Frosting usually occurs at point of blockage.	Clogged screen or screens in receiver-dehydrator or expansion valve, plugged hose or coil.	Repair as necessary.
	Visual indication.	Low refrigerant switch tripped due to low refrigerant charge.	Connect gauge set to Schrader valve on evaporator control valve (Figure 13-28) and check system pressure. If pressure is below normal for ambient temperature (Table XIII-VI), check for leaks and recharge. If normal and above 55 psi (Table XIII-VI), start engine and check refrigerant level. If normal and below 55 psi, connect a jumper wire across the low refrigerant switch. Start engine and check refrigerant level.

TABLE XIII-X. TROUBLESHOOTING CUSTOMER COMPLAINTS (AIR CONDITIONING SYSTEM) (cont.)

NOTE

Whenever the freon system is opened for repairs of any cause, the system must have the dehydrator replaced. Then the complete system must be purged, evacuated, and recharged to remove excess moisture.

Trouble	Indication	Cause	Suggested Remedy
System will not produce sufficient cooling	Electrical Low airflow from ducts; fan motor possibly noisy.	Circulating fan motor sluggish in operation.	Remove fan motor; service or replace as required. (Refer to Paragraph 13-34)
	Mechanical Visual inspection.	Compressor clutch slipping.	Remove clutch assembly for service or replacement.
		Check air gap (Sankyo).	Adjust air gap
	Blower motor operating at high speed, low airflow from ducts.	Obstructed blower passage.	Examine entire passage for obstruction. Correct as necessary
	Insufficient cooling at discharge outlets. Excessive high pressure gauge reading.	Insufficient air circulation over condenser coils. Fins clogged with dirt or bugs.	Clean condenser coils.
	Fins clogged with lint, dust, or coated with cigarette tars.	Evaporator clogged.	Clean with compressed air. Use cleaning solvent to remove cigarette tars.
	High pressure gauge reading normal, low gauge reading usually too high.	Evaporator control valve defective.	Replace evaporator control valve.

TABLE XIII-X. TROUBLESHOOTING CUSTOMER COMPLAINTS (AIR CONDITIONING SYSTEM) (cont.)

Trouble	Indication	Cause	Suggested Remedy
System will not produce sufficient cooling. (cont.)	Refrigeration Bubbles in sight glass; high gauge reading excessively low.	Insufficient refrigerant in system.	Recharge system until bubbles disappear in receiver sight glass, and gauge readings stabilize to specifications.
	Gauge pressures may be normal or may show slightly increased head pressure and low suction pressure; discharge output temperature higher than specified.	Clogged screen in expansion valve.	Purge system; replace expansion valve.
	Excessively high or low gauge readings, may cool in excess or not enough.	Expansion valve thermal bulb has lost charge.	Purge system; replace expansion valve.
	High pressure gauge usually higher than normal, low pressure gauge lower than normal, receiver cold to touch and may frost.	Clogged screen in receiver-drier.	Purge system; replace receiver-drier.
	Excessive head pressure gauge reading.	Excessive moisture in system.	Purge system; replace receiver-drier.
	Excessive head pressure, sight glass shows bubbles or is cloudy.	Air in system.	Purge, evacuate and charge system. (Replace receiver-drier.)

TABLE XIII-X. TROUBLESHOOTING CUSTOMER COMPLAINTS (AIR CONDITIONING SYSTEM) (cont.)

Trouble	Indication	Cause	Suggested Remedy
Excessively noisy system.	Electrical Visual inspection: clutch vibrates.	Defective winding or improper connection in compressor clutch coil.	Replace or repair as required.
	Mechanical Visual inspection: belt slips and noisy.	Loose or excessively worn drive belt.	Tighten or replace as required.
	Noisy when engaged.	Noisy clutch.	Remove clutch for service or replacement as necessary
	Check for intermittent or slipping clutch (Sankyo).	Check air gap.	Adjust air gap - defective coil
		Check clutch bearing.	Replace bearing.
	Clutch disengaged "chattering."	Check air gap.	Replace or repair Adjust air gap. Defective clutch pulley or front plate.
	Loose mounting: worn internal compressor parts.	Compressor noisy.	Check mounting and repair; remove compressor for service or replacement.
	Compressor noisy; hot to touch	Compressor oil level low.	Fill with correct specified oil.
	Noisy blower motor.	Circulating fan noisy; excessive wear in blower motor.	Remove blower motor for service or replacement as required. (Refer to Paragraph 13-34.)

TABLE XIII-X. TROUBLESHOOTING CUSTOMER COMPLAINTS (AIR CONDITIONING SYSTEM) (cont.)

Trouble	Indication	Cause	Suggested Remedy
Excessively noisy system. (cont.)	Refrigeration Rumbling noise or vibration in high pressure line, thumping noise in compressor; excessive head pressure and suction pressure; bubbles in sight glass.	Excessive charge in system.	Discharge excess freon until high pressure gauge drops within specifications.
	Hissing in evaporator case at expansion valve; bubbles or cloudiness in sight glass; low head pressure.	Low charge in system.	Check system for leaks; charge system.
	Expansion valve noisy; suction pressure low.	Excessive moisture in system.	Replace dehydrator; purge, evacuate and charge system.

NOTE

When a unit must be removed from the system for service or replacement, the system must have the dehydrator replaced also, and the system must be purged, evacuated, and recharged to remove excess moisture.

13-136. PRESSURIZATION SYSTEM (DUKES).

13-137. DESCRIPTION AND PRINCIPLES OF OPERATION. Pressurization air for the cabin originates from the engine bleed port on each engine. The air leaves the bleed port at a maximum temperature of 600° F and a maximum pressure of 90 psia. It then travels to the intercooler assembly where an air-to-air heat exchange process takes place. From the intercooler assembly the air is routed through check valves and proceeds to a Piper designed jet pump where it is further cooled and the pressure is lowered. From the jet pump this air is routed through the main pressurization line below the cabin floor. It then passes through the pressurized air control box assembly which controls the flow of air that is to be routed to the cabin or overboard. If the air is not needed for pressurization, the control box is actuated to discharge the air below the cabin floor and allowed to flow overboard. When the control box is closed, the air is directed through the environmental control system and through the air distribution ducts along both sides of the cabin walls. All controls needed for operation and regulation of cabin pressurization are mounted on the lower left side of the instrument panel, along with instruments to simplify setting and check system operation. Both the cabin altitude and rate-of-climb adjustments are controlled by the pilot, through the use of the cabin altitude selector and the cabin rate-of-change control. This unit is electrically operated by the 28-volt DC electrical system of the aircraft. The rate of ascent or descent is variable from 100 to 1000 feet per minute. A manual cabin altitude selector overrides the electrical control to permit the manual selection of cabin altitude over a range of sea level to 10,000 feet above sea level. A filtration assembly is part of the control unit. On earlier models a manually controlled dump valve is incorporated in the system to unload the cabin pressure, and on later models cabin pressure is unloaded by lifting the access cover to the emergency gear extension lever. A squat switch on the left main landing gear prevents the cabin from being pressurized while the airplane is on the ground. A test switch is incorporated to override the squat switch when testing the system on the ground.

13-138. PRESSURIZATION CONTROLS. The controls and instruments used to operate the pressurization system are grouped together to simplify operation. Both the cabin altitude and rate-of-change are controlled by use of the cabin altitude selector and the cabin rate-of-change control. The altitude instrument indicates cabin pressure altitude in feet, and rate-of-climb instrument indicates the rate in feet per minute of cabin altitude change. The cabin differential pressure gauge indicates the difference between the cabin interior and the outside atmosphere. A differential pressure warning light is incorporated within the annunciator light unit system to warn the pilot if the cabin differential pressure exceeds the limit specified for the aircraft (refer to Table XIII-XI for the differential pressure switch settings). A manually controlled dump valve is incorporated in the system to unload the cabin pressure rapidly. The dump valve is included on earlier models only, and on later models cabin pressure is unloaded by lifting the access cover to the emergency gear extension lever located on the floor between the pilot and copilot seats. The aircraft is not approved for landing with the cabin pressurized. A squat switch on the left main landing gear prevents the cabin from being pressurized while the aircraft is on the ground A test switch is used to override the squat switch when testing the pressurization system before takeoff.

NOTE

Any service to the pressurization system should be accomplished by a shop which is equipped and has qualified personnel to perform this service.

TABLE XIII-XI. CABIN DIFFERENTIAL PRESSURE SWITCH SPECIFICATIONS

The following specifications pertain to those aircraft equipped with the 587 870 Differential Pressure Switch (Dukes 3547-00).

31T's with S/N's 31T-7400002 to 31T-7820066
31T1's with S/N's 31T-7804001 and up

SWITCH ACTUATION	PRESSURE SETTING TOLERANCES	ALTITUDE SETTING TOLERANCES
Closes	5.67 to 5.77 PSID	10,000 to 10,500 ft.
Opens	5.50 to 4.50 PSID	8,000 ft. min.

The next group of specifications pertain to those aircraft equipped with the 588 099 Differential Pressure Switch (Dukes 1336-00-1).

31T's with S/N's 31T-7820067 and up

SWITCH ACTUATION	PRESSURE SETTING TOLERANCES	ALTITUDE SETTING TOLERANCES
Closes	5.70 to 5.75 PSID	11,500 to 12,500 ft
Opens	5.40 to 4.40 PSID	8,000 ft. min.

Reliable through the following temperatures:

Ambient	-65° F to +120° F
Cabin	+35° F to +120° F

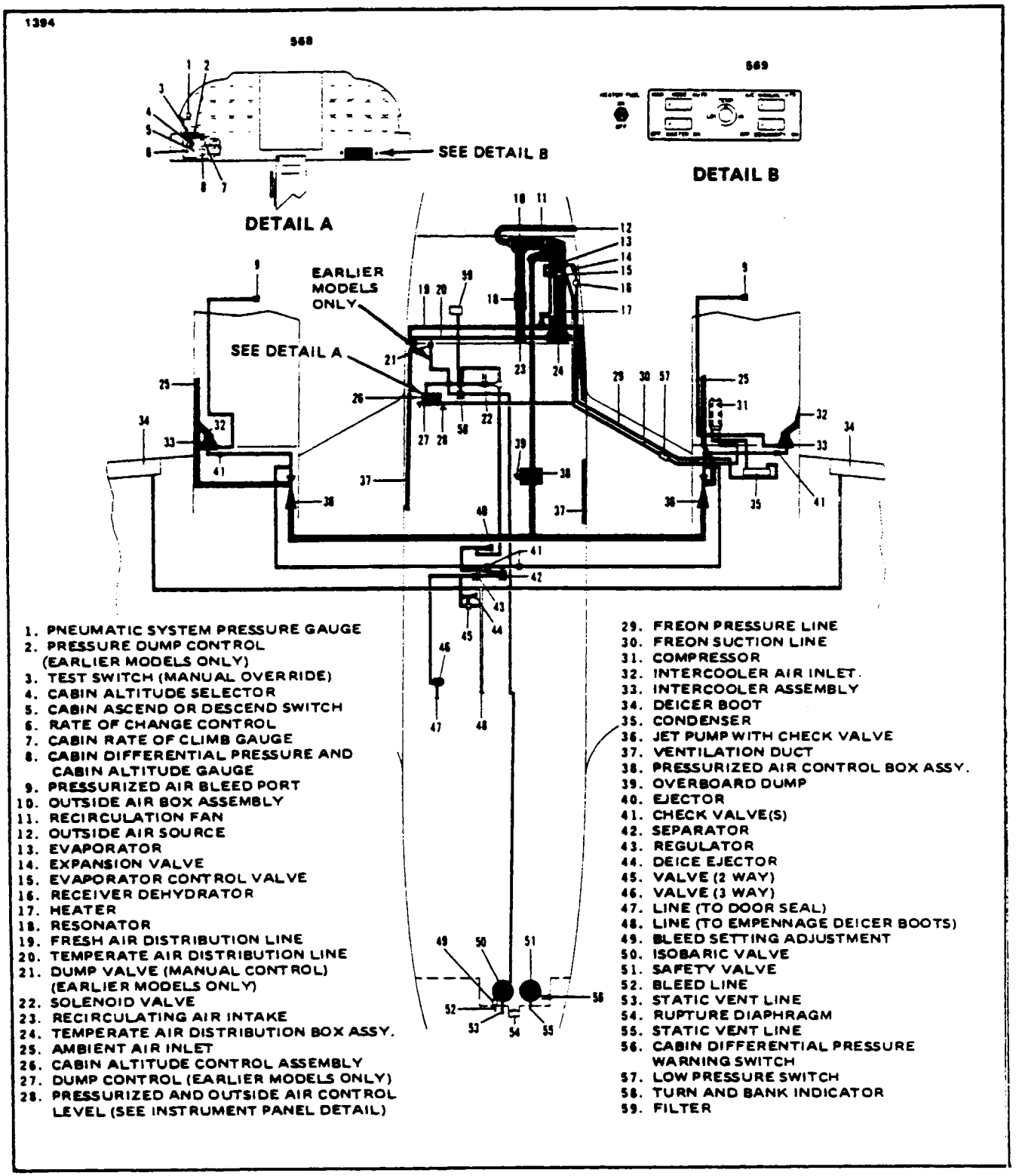

Figure 13-52. Pressurization System Schematic (Dukes)

13-139. OPERATING INSTRUCTIONS.

a. The following steps should be performed before takeoff to insure proper functioning of the pressurization system:

1. Set engine power levers to obtain 70% compressor speed.
2. Set manual air control lever in the pressurized air position.
3. Set cabin altitude selector above field evaluation (500 feet).
4. On earlier models only, ascertain that the manual dump control is closed.
5. Activate the test switch to bypass the landing gear squat switch.

CAUTION

Do not open windows or door when cabin is pressurized. Injury to personnel and damage to aircraft may result.

NOTE

The system is now in the process of pressurizing the cabin. The cabin rate-of-climb instrument should be observed for a slight descent indication to show that the system is operating. Activate the test switch for 10 seconds or until it is evident pressurization is stopping. If the cabin rate of dive is greater than 2000 feet per minute or the cabin differential pressure goes higher than 1 2 psi, check for system malfunction.

6. Release the test switch. This will automatically return to the OFF position and stop the pressurization of the cabin.

b. The following steps should be performed to reset the cabin altitude:

1. After takeoff, set the cabin altitude selector to the desired cabin altitude.
2. On earlier models move the cabin ascend, descend switch to the particular mode of operation.
3. Adjust the rate-of-change control to more than one-fourth of the aircraft's rate of climb or descent (select rate which is comfortable to the passengers).
4. Before descending, reset the cabin altitude selector to field elevation plus 500 feet.
5. On earlier models set the cabin ascend, descend switch to descend position.
6. Adjust the rate-of-change control for a comfortable rate of descent.

NOTE

When the airplane reaches pattern altitude, the cabin differential pressure should be nearly equalized. Do not land with more than one-half psi cabin differential.

13-140. CABIN PRESSURIZATION CHECK. A pressurization check should be conducted whenever 5.30 to 5.50 psi cabin differential cannot be maintained at 70% compressor Ng speed and/or during every 500-hour inspection. The major areas to be considered when troubleshooting the pressurization system are:

a. The engines and bleed air system.
b. The cabin pressurization control system.
c. The pressurized capsule of the fuselage.

There are two methods of performing these checks: one is a flight check using the instructions given in Paragraph 13-139; the other is with the use of a special test unit which can be purchased through Piper Aircraft Corporation, and the instructions given in Paragraph 13-141. This test unit makes it possible to perform checks b and c in the hangar or shop without operating the engines.

During check a, a normal system will show a momentary rise in cabin altitude followed by a return to a stable condition on the cabin rate-of-climb indicator when the engines are both throttled to 70% compressor Ng speed. In order to check for leak rate without the test unit, the aircraft must be flown to 13,000 feet; the controller set to 1000 feet; the aircraft pressurized, and the following steps performed.

a. Set the props to 2000 RPM.
b. Set torque to 800 foot-pounds.
c. Establish a 1000 feet per minute rate-of-aircraft descent.
d. Slowly pull the power levers back to 70% Ng speed (gas generator speed).
e. Check the cabin altitude and rate of change.

A normal system may show a momentary cabin climb which will stabilize to a constant cabin altitude or show a rate of descent. If this does not occur and the cabin shows a continuous rate of climb; then check for excessive leakage in the cabin pressurization system.

NOTE

There are several uncapped vent ports in both the front and rear pressure bulkheads These vent ports must remain open and should not be closed off in any way.

13-141. PRESSURIZATION CHECK WITH TEST UNIT. (Refer to Figures 13-53 and 13-54.) The following pressurization test procedure is used to determine if the aircraft fuselage has an acceptable leakage rate. A pressurization test unit as shown in referenced figures will be required to perform the pressurization test.

a. Aircraft Preparation:

1. Remove the access panel on the left side of the right nacelle. Also, remove the access panel on the left side of the tail section at station 275.0 to gain access to the rear of the pressure bulkhead
2. Remove the trim panel in front of the isobaric and safety valves and disconnect the bleed line from the isobaric valve. Place a protective cap over the line fitting on the bulkhead
3. Remove the access panel on the right side of the nose section.
4. Move the pressurization control lever to the pressurized position.
5. Insure the access cover to the emergency gear extension lever is closed, and on earlier models, insure dump valve control is closed.

b. Test Unit Hookup:

1. Disconnect the pneumatic line rubber hose connection at nacelle station 121.5 and connect the instrument air line from the test unit to the pneumatic line that goes back through the nacelle. Plug the other side of the pneumatic line. (Refer to Figure 13-54, Sketch A.)
2. Disconnect and remove the fresh air distribution tube from the air distribution box. Cap the hose from the distribution box with a cap plug fabricated per Figure 13-55

455

OLD UNIT

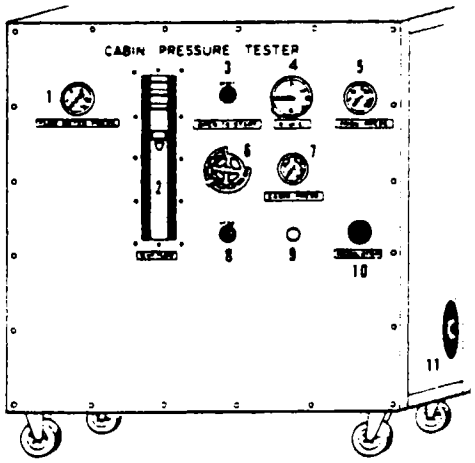

FRONT VIEW

1. FLOW METER PRESSURE GAUGE
2. RATE OF FLOW GAUGE
3. START BUTTON
4. RATE OF CHANGE GAUGE
5. PNEUMATIC PRESSURE GAUGE
6. MAIN FLOW VALVE CONTROL
7. CABIN PRESSURE GAUGE
8. STOP BUTTON
9. RESET BUTTON
10. REGULATOR CONTROL
11. FILTER
12. PNEUMATIC AIR HOOKUP
13. INSTRUMENT AIR HOOKUP
14. BYPASS AIR HOOKUP
15. PRESSURIZED AIR HOOKUP
16. POWER SUPPLY HOOKUP
17. SHOP AIR HOOKUP

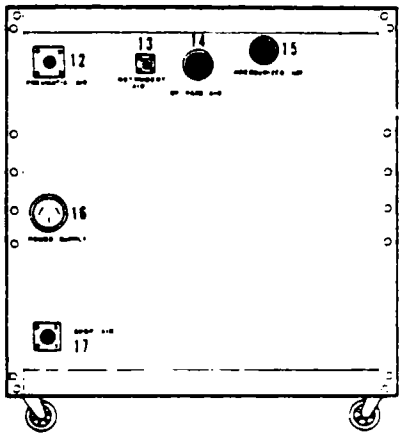

REAR VIEW

1312

Piper Part #756 344

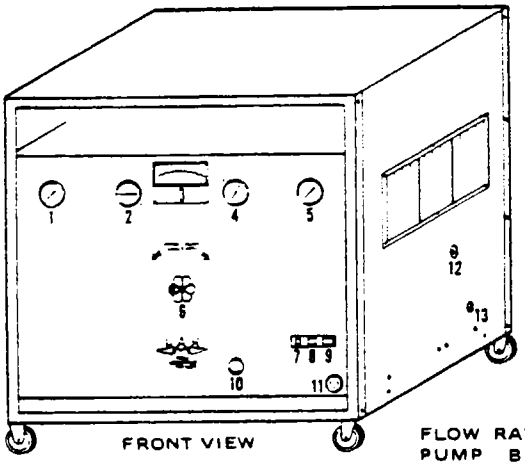

FRONT VIEW

NOTE
FLOW RATE VALVE MUST BE SET IN FULL PUMP BYPASS BEFORE STARTING OR STOPPING UNIT.

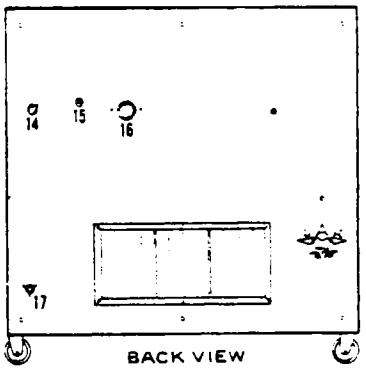

BACK VIEW

1. FLOW METER PRESSURE INDICATOR
2. RATE OF CLIMB INDICATOR
3. RATE OF FLOW INDICATOR
4. CABIN DIFFERENTIAL PRESSURE INDICATOR
5. INSTRUMENT AIR PRESSURE INDICATOR
6. FLOW RATE VALVE
7. CIRCUIT BREAKER
8. START BUTTON
9. STOP BUTTON
10. AIR REGULATOR VALVE
11. ELECTRICAL CONNECTION
12. FILL PORT
13. SIGHT GAUGE
14. INSTRUMENT AIR
15 CABIN REFERENCE
16. PNEUMATIC AIR OR PRESS. AIR
17. SHOP AIR

NEW UNIT

Figure 13-53. Cabin Pressure Test Units (Typical)

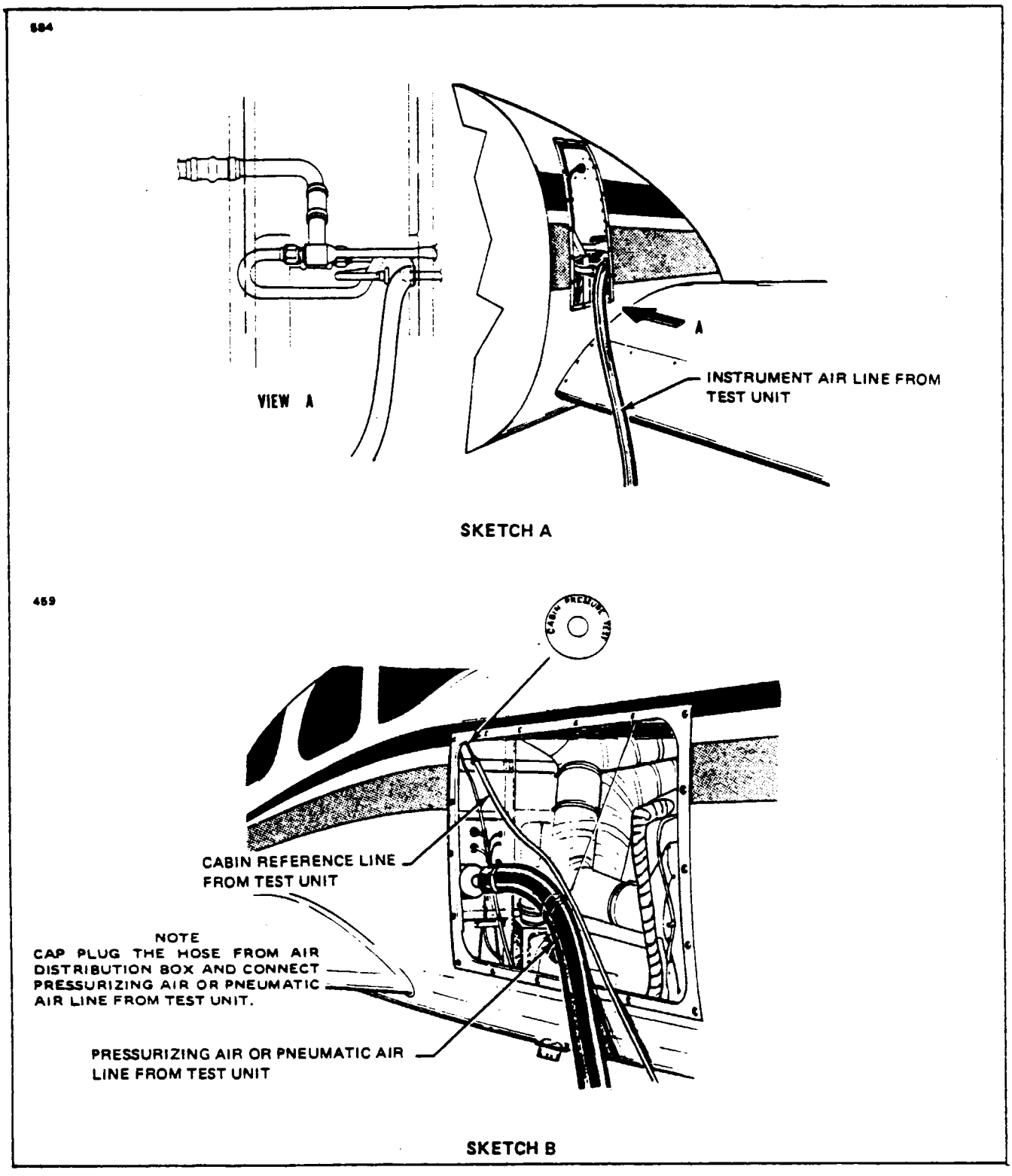

Figure 13-54. Pressurization Test Hookup

3. Connect the pneumatic or pressurizing air line from the test unit to the distribution tube at the forward pressure bulkhead per Figure 13-54. Make the connection using a fabricated reducer as shown in Figure 13-56

4. Remove the protective plug from the fitting identified by the placard stating "Cabin Pressure Test" located on the forward pressure bulkhead (station 81). Connect the cabin reference line from the test unit to the fitting. (Refer to Figure 13-54.)

5. Connect the test unit to a source of pressurized shop air and electrical power.

c. Test Unit Operation:

1. Deactivate all circuit breakers of operable systems except the cabin pressure control and door seal circuit breakers. Turn on the aircraft electrical power to activate the cabin door seal system.

2. If the airplane has not been placed on jacks, it will be necessary to disconnect electrical power to the vacuum relief solenoid, located above the pilot's rudder pedals behind the instrument panel, to prevent a leak path in the system.

3. Set the pneumatic system pressure on the test unit with the regulator control knob to 20 psi. A readjustment may be necessary after door seal inflation of 10 seconds.

4. Turn the flow rate valve knob to the full bypass position, thus allowing the machine to be turned on, then start it.

5. Turn the flow rate knob in, or to the full increase as fast as possible to obtain an input rate of flow to the cabin that will exceed the allowable leak rate from the cabin. This differential pressure is needed to close the isobaric and safety valves thus allowing the cabin to begin to pressurize. As the valves begin to close, this action is indicated on the test unit by the cabin rate of change indicator reading a dive. As soon as a dive is indicated, begin to close, or unscrew, the flow rate knob to a position sufficient to maintain a 2000 foot per minute rate of descent on the rate change indicator. Allow the cabin differential pressure to rise to 5.0 psi.

NOTE

If no personnel are inside the pressurized cabin, the rate of change can be as high as 6000 feet per minute.

6. When 5.0 psi is reached on the cabin differential gauge, decrease the main flow rate by rotating the flow rate knob until the cabin rate of change gauge indicates zero.

7. Maintain 5.0 psi cabin differential and zero on the rate of change gauge by use of the regulator control on the test unit.

8. Observe the leak rate on the flow gauge. The maximum reading is from 50 to 57 CFM.

NOTE

The reading of the flow gauge on the old unit is taken from the top of the float in the gauge.

9. A reading over 57 CFM on the flow gauge would indicate a bad leak or series of leaks in the pressure vessel which would require repair.

10. After all checks are completed, bring the cabin back down to standard pressure by slowly closing or unscrewing the large flow rate knob. If no one is inside the cabin, a 6000 foot per minute change is okay, otherwise do not exceed a 2000 foot per minute change for purposes of comfort of the individual inside.

CAUTION

The machine cannot be turned off while there is a pressure differential in the cabin for purposes of rapid depressurization; however if the machine is unplugged, the latter result will occur causing serious discomfort to anyone that may be within the cabin.

11. When the checks have been completed, disconnect all the various test unit connections from the aircraft and reconnect the original plumbing.

WARNING

Ascertain that the bleed line is reconnected to the isobaric valve with all vents open and the protective plug installed over the instrument reference fitting. Reconnect electrical power to the vacuum relief solenoid valve if previously disconnected.

12. Replace the access panels, trim panels and engine cowling.

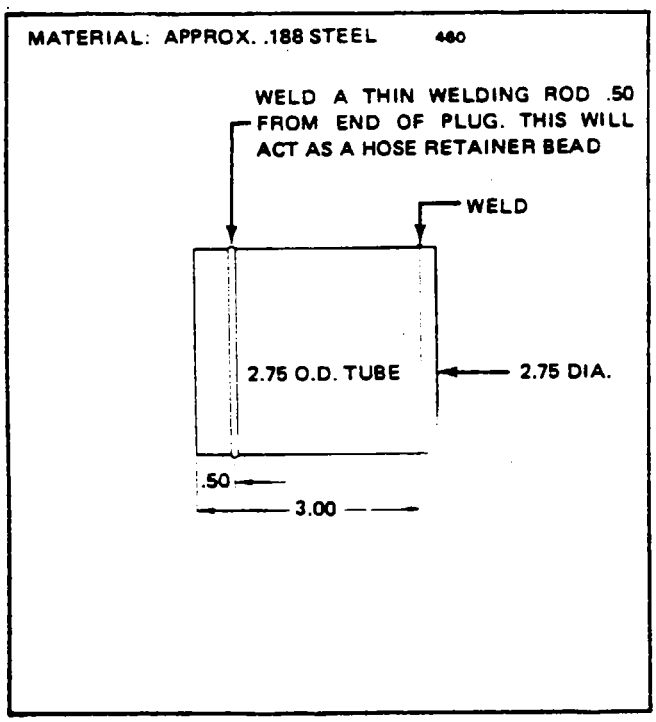

Figure 13-55. Fabricated Hose Plug

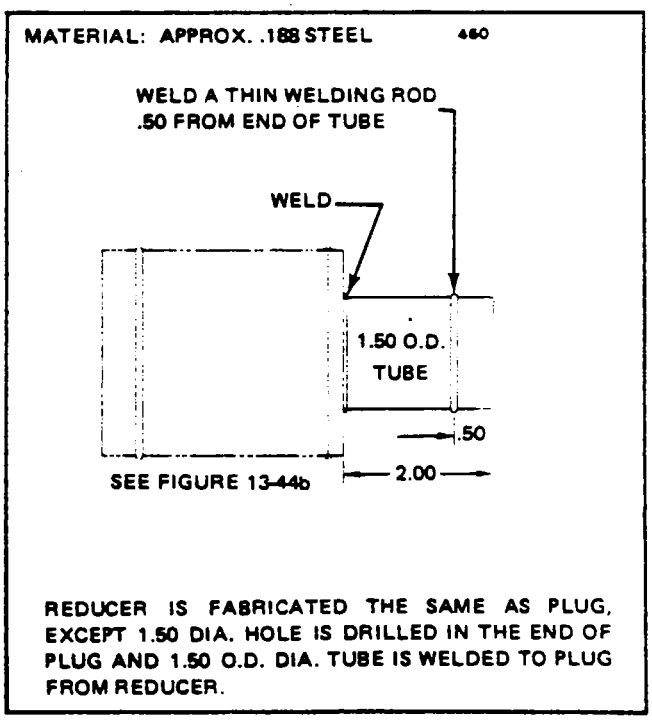

Figure 13-56. Fabricated Reducer

13-142. DUMP VALVE FUNCTION (EARLIER MODELS ONLY). The dump valve is manually controlled by the pilot. When the valve is opened, it releases the pressure in the isobaric feed line to ambient, allowing the cabin pressure to open the isobaric valve.

13-143. RUPTURE DISC (EARLIER MODELS ONLY). Refer to the latest revision of Piper Service Letter No. 833.

13-144. ISOBARIC VALVE FUNCTION. Three states of operation exist for the isobaric valve in flight, they are: open, modulating and closed. The isobaric valve is controlled by the isobaric controller which is an adjustable aneroid controlled orifice, that stops cabin pressure from reaching the isobaric valve if the controller is set above the cabin altitude and admits cabin pressure if the controller setting is below the cabin altitude.

The isobaric valve is constantly bleeding off to ambient. It will be forced open by cabin pressure if the flow from the controller stops, or it will go shut if the controller flow exceeds the bleed rate

The OPEN STATE in flight, with full cabin flow, results in an unpressurized cabin.

The MODULATED STATE occurs as the cabin pressure altitude passes through the controller setting.

The CLOSED STATE occurs when the cabin inflow is less than the cabin leak rate.

13-145. ISOBARIC VALVE REMOVAL.

a. Remove the trim panel in front of the safety and isobaric valves located in the rear pressure bulkhead.

b. Remove the access panel on the left side of the tail section just aft of the entrance door.

c. Disconnect the lines to the isobaric valve, which is the valve located on the left side.

d Reaching through the tail section access hole, remove the small access plate behind the isobaric valve.

e. Working through this small access hole, remove the six bolts which secure the isobaric valve in place.

f. Remove the valve from the pressure bulkhead.

13-146. ISOBARIC VALVE INSTALLATION.

a Position the isobaric valve onto the shelf in the rear pressure bulkhead. Ascertain that a new gasket is installed between the valve and shelf surface.

b Working through the small access opening in the rear of the pressure bulkhead 274.0, install the six bolts, with new washers, which hold the valve in place and torque them 13 to 17 inch-pounds. (Use the gasket to hold the six bolts in place prior to positioning the valve.)

c. Install the small access plate on the rear of the pressure bulkhead.

d Install the access plate on the left side of the tail section.

e. Connect the pressurization control line to the valve.

f. Install the trim panel in front of the valves after making sure acoustical material is in good condition.

WARNING

Any time maintenance is performed on the pressurization system, the aircraft's pilot must be ready to lift the emergency gear extender cover if a runaway pressurization is noted. (See Step e of Paragraph 13-154.)

13-147. SAFETY VALVE FUNCTION. The safety valve is closed in flight and only opens to control at slightly above normal full differential, if the isobaric valve fails to function.

13-148. SAFETY VALVE REMOVAL.

a. Remove the trim panel in front of the safety and isobaric valves located in the rear pressure bulkhead.

b. Remove the access panel on the right side of the tail section aft of station 274.

c. Disconnect the line to the safety valve.

d. Reaching through the tail section access hole, remove the small access plate behind the safety valve.

e. Working through the small access hole, remove the six bolts holding the safety valve in place.

f. Remove the valve from the pressure bulkhead.

13-149. SAFETY VALVE INSTALLATION.

a. Position the safety valve onto the shelf in the rear pressure bulkhead. Ascertain that a new gasket is installed between the valve and shelf surface. Be sure that the diaphragm spring is adjusted per Paragraph 13-154. a and the diaphragm is level to seat within 1/16 inch.

b. Working through the small access hole in the rear of the bulkhead, install the six bolts with new washers, that secure the valve in place. (Use the gasket to hold the six bolts prior to positioning the valve.)

c. Install the small access plate on the rear of the bulkhead.

d. Install the access panel on the right side of the tail section.

e. Connect the line to the valve.

f. Install the trim panel in front of the valves after making sure acoustical material is in good condition.

13-150. ISOBARIC AND SAFETY VALVES COMBINED FUNCTION. The isobaric valve must be held wide open during full throttle application at takeoff to prevent a cabin pressure rate of dive in excess of 4000 feet per minute. The isobaric valve is held wide open by a vacuum source obtained from an ejector and is controlled through a normally closed solenoid that is activated by the landing gear squat switch.

The safety valve is also held partially open at the same time through a coil spring assembly. With both valves open, the initial cabin dive rate is less than 1000 feet per minute during full throttle application at takeoff.

At lift-off the squat switch on the main gear closes the isobaric solenoid thus removing the vacuum source allowing the isobaric valve to close to its free state. The safety valve will also slowly close by cabin pressure bleeding into the safety valve. This closing will raise the unpressurized differential thus overcoming most of the aircrafts rate of climb. The isobaric control is normally set to begin controlling at 500 feet or more above the airport runway, at which time the safety valve is completely closed. The closing of the safety and isobaric valve at full power will produce a small cabin unpressurized differential of about .15 to.25 psi. It is necessary to establish this small cabin pressure in order to start cabin pressurization.

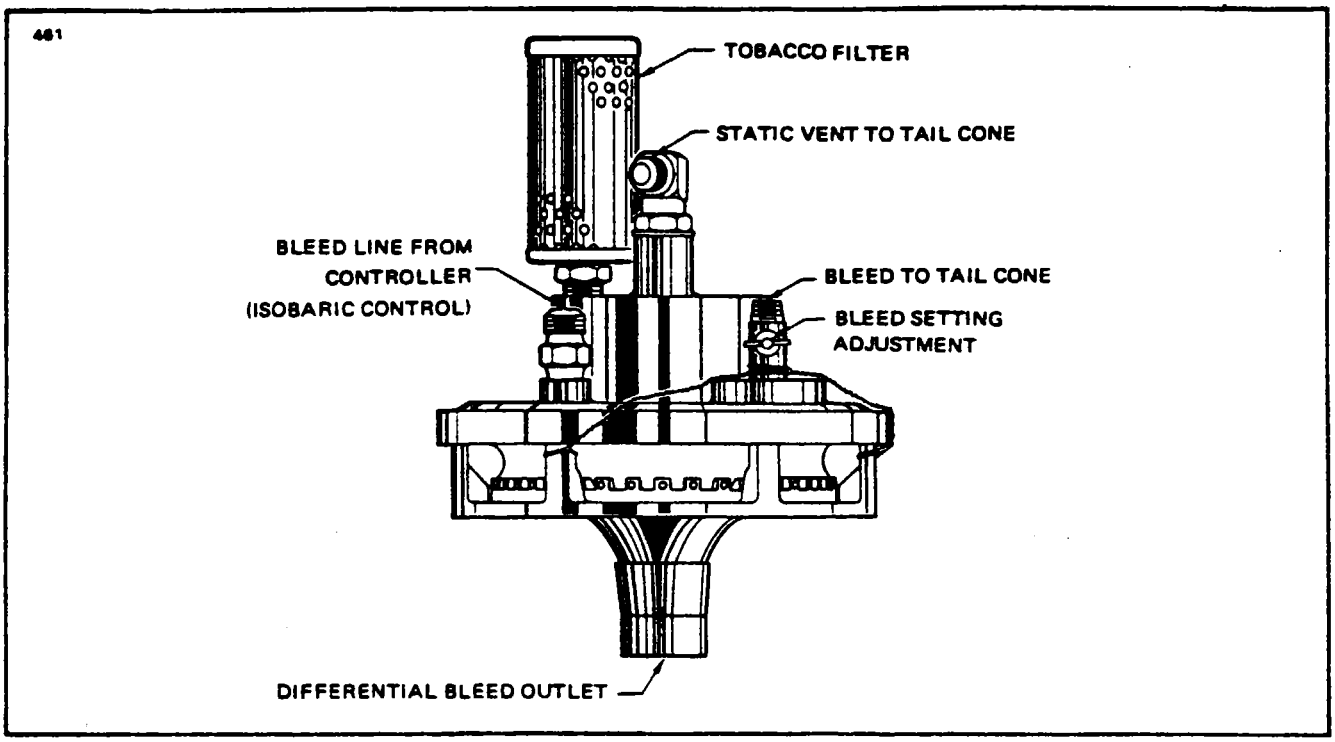

Figure 13-57. Isobaric Valve

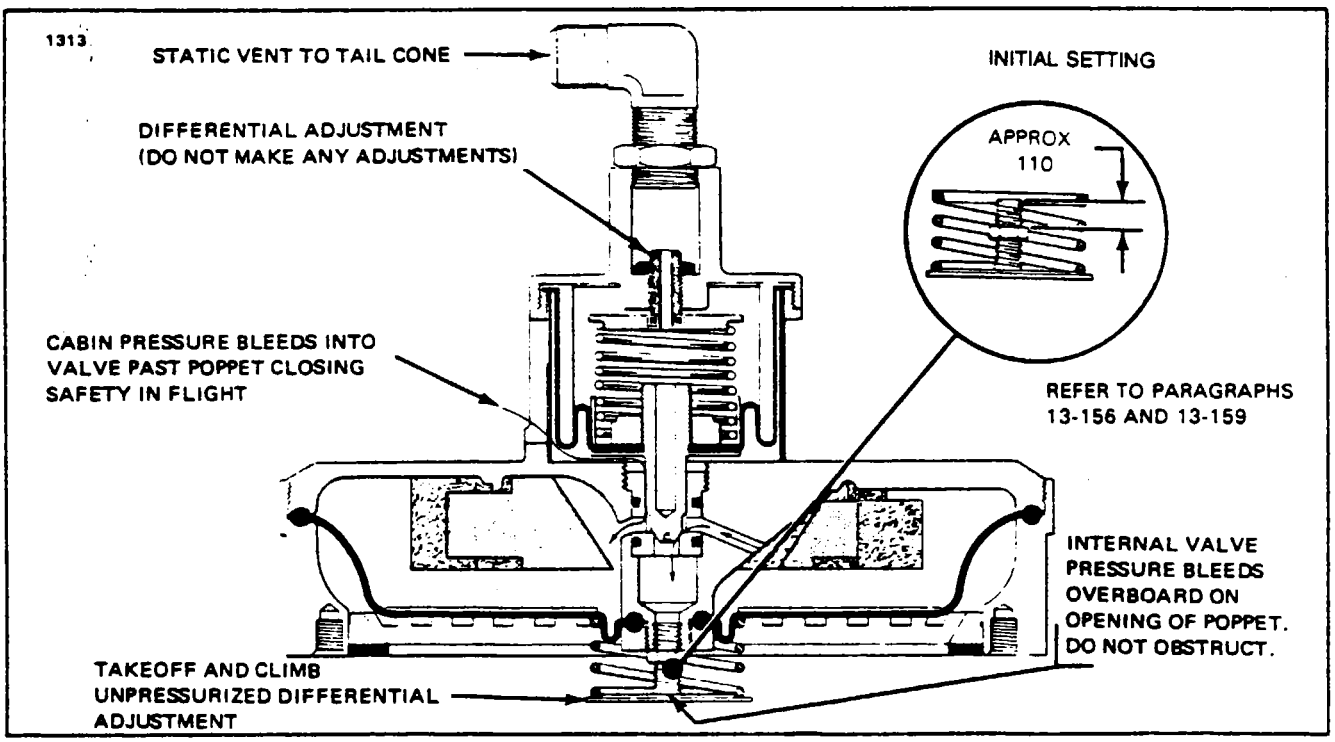

Figure 13-58. Safety Valve

13-151. ISOBARIC AND SAFETY VALVE CLEANING. Fluctuation of cabin pressure often indicates dirty isobaric and safety valves. This may be ascertained in the following manner:

a. Working through the tail section access hole in the side of the fuselage, remove the small access plate behind the isobaric or safety valve.

b. Working through this small access hole, compress the valve bellows and inspect the valve housing along the inner rim that the bellows contacts when in the extended position.

c. If the inner rim of the housing is dirty, or if the bellows sticks to the inner rim, wash the rim and bellows with cleaning solvent (Federal Specification P-D-680).

NOTE

There is a tobacco tar filter installed on the isobaric valve. This is a disposable type filter and must be replaced every 200 hours of normal use. Refer to the Parts Catalog for part number of replacement filter.

13-152. ISOBARIC FILTER REPLACEMENT. (Refer to Figure 13-57.)

a. Remove the trim panel in front of the safety and isobaric valves located in the rear pressure bulkhead.

b. Disconnect and remove the filter from the valve.

c. Place teflon tape on the threads of the filter and install in place on the isobaric valve.

d. Install the trim panel in front of the valves.

13-153. ISOBARIC AND SAFETY VALVE SETUP. (Refer to Figures 13-57. and 13-58.) The following information should prove most helpful in obtaining the best adjustments of the isobaric and/or safety valves.

Before any work is done on this system, the following safety precautions should be studied and thoroughly understood by the people who will do the job, such as the pilot who will fly the airplane and the mechanic who will make the adjustments.

13-154. SAFETY PRECAUTIONS.

a. If a flight is necessary, do not leave any of the plumbing from the pressurization controller to the isobaric valve disconnected.

b. Do not take off with the isobaric valve bleed screw closed.

CAUTION

Do not close the bleed screw in flight, in an attempt to determine the 1 turn open nominal starting point. This should be done before the flight starts, on the ground. If the bleed screw is closed in pressurized flight, the cabin will immediately be pressurized to 5.5 psi.

c. Do not attempt any adjustments above 15,000 feet in case of depressurization.
d. Do not attempt any adjustment at or near maximum cabin differential as they will have no effect.
e. If an error causes an uncontrolled pressurization, the pilot should use the emergency gear extender cover to stop the pressurization. The accepted practice to stop pressurization in this situation is to lift the forward edge of the cover, with his fingers a small amount, to start depressurization; then when the cabin is depressurized, the cover should be completely removed to prevent repressurization. The rate of depressurization can be conveniently controlled by the amount the cover is lifted.

13-155. SYSTEM SETUP PROCEDURE. The following items should be checked for their proper condition or operation:

a. All system lines are secure.
b. The rupture disc is not damaged. (Early models only.)
c. The door seal is functioning.
d. Vacuum is being applied to the isobaric valve before lift-off and released after lift-off.
e. The controller is set for 500 feet above the airport altitude before takeoff.
f. The cabin leak rate is near its proper level.
g. The outside air control valve and overboard dump valve are operating properly and are not leaking.

13-156. ISOBARIC AND SAFETY VALVE ADJUSTMENT. If a new isobaric and/or safety valve has been installed, the adjustments should be as follows:

a. The safety valve diaphragm spring assembly should be adjusted so that from the top of the jam nut to the top of the threaded portion should be approximately .110 ± .3 of an inch. Install the spring assembly into the safety valve three full turns; then tighten the jam nut 4 to 8 inch-pounds. (Refer to Figure 13-58.)
b. The bleed screw on the isobaric valve should be adjusted one turn open (counterclockwise) from the closed position (full clockwise). (Refer to Figure 13-57.)

NOTE

Do not close valve so tight that valve seat is damaged.

13-157. IN FLIGHT CHECK. In flight adjustments require the need of a hand carried altimeter and a rate-of-climb indicator. The following checklist should be used before the actual flight:

1. All system lines connected and secure.
2. Safety valve and isobaric valve not damaged.
3. Rupture disc not damaged. (Earlier models only.)
4. Pressurization dump valve and outside air control valve operating properly.
5. Isobaric valve bleed screw set, (1 turn open).
6. Pressurization control lever set.
7. Pressurization controller set.
8. Proper indication from pressurization test switch.
9. Pilot is briefed on the use of the emergency gear extender cover to stop an uncontrolled pressurization situation.

a. During the ground runup, check that the isobaric valve is fully open. This indicates that vacuum is being applied to the inside of the valve. When the test switch is activated, the vacuum is released; check that the diaphragm falls to a position where the sipes just touch the top of the castellations on the valve. (Refer to Figure 13-57.)

b. Ground setting of the safety valve spring is determined by noting the readings on the hand carried altimeter and rate-of-climb indicator.

NOTE

Ascertain that the altimeter is calibrated and set at 29.92 for all data and use an accurate 2-1/2 diameter rate-of-climb indicator.

13-158. TAKEOFF AND CLIMB PROCEDURE.

a. Accelerate the engines slowly to full power, taking about five seconds to obtain full power.

b. The maximum dive, noted on the hand carried rate of climb, should be about 600 to 800 feet per minute for best results. However, whatever the reading, note it as the throttle dive.

NOTE

After reading a maximum dive indication, the rate of dive should start to reduce and approach a zero indication before lift-off.

c. At lift-off, the vacuum applied to the isobaric valve is released, and the isobaric valve diaphragm will fall to its free state causing an additional dive in the cabin. This rate of dive, showing on the hand carried instrument, should be about 500 to 1000 feet per minute, and then slowly start to return towards zero. Note this dive as the vacuum dive.

d. Climbing out at between 1200 and 1500 feet per minute aircraft rate, note the hand carried rate-of-climb indication.

NOTE

In this phase of flight, the safety valve should be completing its closing phase of operation.

e. If the safety valve diaphragm is adjusted properly, the cabin rate should be between 500 feet per minute dive to 800 feet per minute climb. Tolerances and aircraft peculiarities make it virtually impossible to secure a zero rate for this phase of the flight. Note this phase as the climb out rate. It occurs just after lift-off and lasts about 15 or more seconds.

NOTE

After the safety valve closes, the cabin rate of climb will increase to that of the aircraft.

f. Continue the climb out at normal climb power setting when it's safe to do so.

NOTE

Do not confuse the change in cabin rate associated with a power reduction with any of the rates noted in Paragraph 13-158, b, c and e.

g. The cabin rate of climb should begin to decrease from equaling the aircraft rate and slowly approach zero as the cabin altitude approaches the controller setting. Example: If the controller is set at the number (1) window on the controller dial, the cabin should be near zero rate of climb when the cabin is at 1000 feet as indicated on the hand carried altimeter.

NOTE

The controller may be as much as 500 feet off from the hand carried altimeter. It should be noted that the system has been designed, to have all the errors give a higher cabin altitude than selected, in order that optimum performance can be obtained. Do not attempt to remove this error if less than 500 feet.

13-159. ADJUSTMENT OF DIAPHRAGM SPRING. The throttle dive, vacuum dive, and climb out dive gives an indication as to the spring adjustment to be made. Study the data and decide if the throttle dive and vacuum dive is high, normal or low (700 feet per minute being normal). Determine if the climb out rate is a high dive rate, normal rate or a high climb rate (500 feet per minute dive to 800 feet per minute climb is the normal rate).

Decide which of the titled paragraphs below covers the particular problem and follow the directions. It will be a big help in understanding the problem to watch the isobaric and safety valve diaphragms together with the hand carried instruments during the takeoff and climb out phase of the flight. Removing the valve trim cover at the aft pressure bulkhead will not affect the data.

a. Throttle Dive (Low) and Climb Out Rate (High Climb Rate).

If the throttle dive is low, 600 feet per minute or less, and if the climb out rate is more than 800 feet per minute climb, adjust the safety valve spring to relieve tension (close safety valve diaphragm).

NOTE

To relieve spring tension, screw the springs lower seat counterclockwise looking at the seat. These adjustments must be made after flight, on the ground. The cover plates on the pressure bulkhead may be left off until all adjustments have been completed. Normally one full turn of the spring seat will secure the desired results. However, if the aircraft will not pressurize, the safety valve spring seat may have to be turned counterclockwise two or more turns. Do not confuse the high rate of cabin climb after the safety valve closes and before stabilized cabin pressurization with climb out dive. (Refer to Paragraph 13-158, c.)

b. Throttle Dive (High) and Climb Out Rate (High Dive Rate).

If the throttle dive is much greater than 800 feet per minute and the climb out dive is greater than 500 feet per minute dive, adjust the safety valve spring seat clockwise to increase spring tension. Experience indicates from 1/2 to 1 turn of spring seat adjustment will change the rate about 500 feet per minute. Do not make changes of over 2 turns at one time and try to leave the cabin diving slightly during the climb out rate phase of flight.

c. If the dive due to throttle advance is high with little lift-off dive, the indication is that vacuum is not being applied to the isobaric valve.

If the dive due to throttle advance is normal with little lift-off dive, the indication is that vacuum is not being released from the isobaric valve at lift-off.

If the dive due to throttle advance is normal with a very high rate of cabin dive at lift-off, the indication would be that the bleed screw is closed too far.

NOTE

If a high cabin dive rate is noted just after lift-off (3000 feet per minute or greater) and does not quickly subside, the pilot should lift and slowly remove the emergency gear extender cover to stop the pressurization. The indication is that the bleed screw is closed too far or a leak is indicated in the pressurization system.

If the aircraft will not pressurize, check the following items:

1. Emergency gear extender cover leaking.
2. Main door seal inoperative.
3. Safety valve diaphragm spring tensioned too tight.
4. Controller improperly set before takeoff.
5. Safety valve has a tendency to stick from the aircraft not being flown for a period of time.

The last two items can sometimes be corrected in flight by the following procedure:

1. Accelerate engines to full power.
2. Turn pressurization controller to minimum altitude position and note cabin rate-of-climb indicator.
3. If the procedure is going to work, the cabin rate of dive should increase to about 3000 feet per minute.
4. When the above high dive rate is noted, turn the controller smoothly to 500 feet below the aircraft altitude.
5. Decrease power to climb or cruise power to help moderate cabin bump that will occur.
6. Use rate control to bring cabin to desired level.

The above procedure will cause an obvious cabin pressure bump, but if the procedure is followed, it will not cause personal discomfort.

13-160. CABIN ALTITUDE CONTROLLER.

13-161. REMOVAL OF CONTROLLER.

a. Disconnect the electrical connector and the bleed air line from the rear of the cabin altitude controller central assembly. Cap the open ports of the bleed air line and fitting on the selector to prevent dust from entering the system.

b. Remove the four machine screws and nuts (later aircraft have anchor nuts), which secure the selector to the instrument panel. It may be necessary to remove the cabin pressure and cabin rate-of-change instruments to gain access to the nuts.

c. The cover plate of the circuit breaker panel may have to be removed to provide clearance for the altitude selector removal from the instrument panel.

d. Remove the controller by lifting the assembly from the face of the instrument panel.

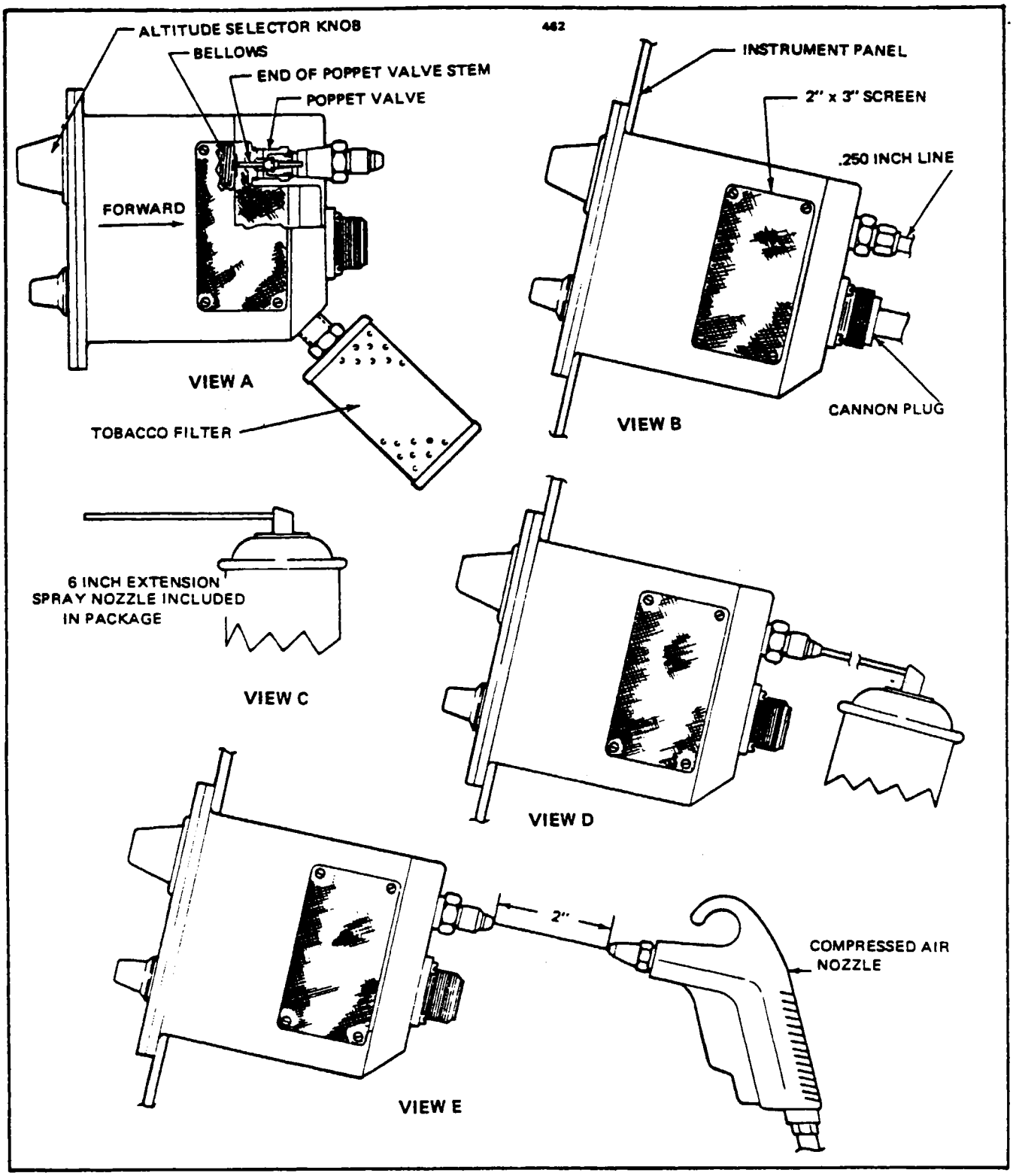

Figure 13-59. Cleaning of Pressurization Controller (Typical)

13-162. INSTALLATION OF CONTROLLER.

a. Position the controller into the instrument panel cutout from the face side of the panel.

b. Secure the controller to the instrument panel with four machine screws and nuts. Install the cabin pressure and cabin rate-of-change instruments, if they were removed during the removal of the cabin altitude controller.

c. Install and secure the cover plate of the circuit breaker panel if it was removed during the removal of the selector.

d. Remove the protective caps from the bleed air ports of the selector fitting and bleed air line and connect the line to the fitting; also connect the electrical connector to the rear of the controller.

13-163. CONTROLLER FILTER REPLACEMENT. (Refer to Figure 13-59.) There is a tobacco tar filter installed in the pressurization system cabin controller. This is a disposable type filter which should be replaced every 200 hours of normal use. Refer to the Parts Catalog for part number of replacement filter.

a. The filter is accessible from underneath the instrument panel.

b. Remove the filter from the back of the controller and discard.

c. Place teflon tape on the threads of the new filter and install in place on the controller.

13-164. PRESSURIZATION CONTROLLER CLEANING. (Refer to Figure 13-59.) Fluctuation of cabin pressurization, when the system is properly set up after takeoff, could be caused by a sticking poppet valve in the pressurization controller, located in the lower left corner of the instrument panel. The cause of this problem is tobacco deposits on the poppet valve. The degree of fluctuation depends on how long the deposits have been present and how much smoking occurs in the cabin during flights. The following information should be used to clean the poppet valve and correct the problem:

a. Obtain a can of aerosol solvent such as MS-160 "FREON" T-P35 solvent, manufactured by the Miller-Stephenson Chemical Co., Inc. or an equivalent type.

b. Disconnect the electrical connector and the .250 inch line from the rear of the controller.

WARNING

Wear safety glasses when working with this type of solvent to prevent the spray from getting into the eyes. The propellent in the aerosol can is FREON and alcohol, and dangerous freezing of the eyes could occur if liquid from the can is allowed to touch the eyes. Do not breath the vapors for a prolonged period of time. If contact with the eyes occurs, wash immediately with water and consult a physician.

c. Attach the spray extension to the aerosol can. (Refer to Figure 13-59.)

d. Set the altitude selector on the face of the controller to the lowest altitude position.

e. Insert the spray nozzle about 1.50 inches into the controller through the .250 fitting. (Refer to Figure 13-59)

f. Apply solvent for a period of one second and allow two minutes to elapse before applying another one second application.

g. Using a compressed air nozzle as shown in Figure 13-59, blow into the fitting to remove all solvent and residue.

NOTE

Cleaning is not a normal maintenance item with properly maintained tobacco tar filters. Clean only if a sticky poppet is suspected. Do not use more than 20 psi air pressure at the nozzle.

h. For badly fouled controllers, another application of solvent may be required. (Repeat Step g.)

i. If the cleaning solvent fails to free the poppet valve, the controller must be removed from the instrument panel for further service.

j. With the controller removed from the panel, remove the four small screws holding the screen or access plate on the side of the controller and remove cover. Due to the screws being of different lengths, they should be marked so they may be reinserted in their proper locations. The end of the poppet valve stem is now accessible. (Refer to Figure 13-59.)

k. Turn the controller selector knob to maximum altitude position, and using a thin screwdriver or knife blade, depress the end of the poppet stem to break the stickiness. Now clean the poppet as outlined in Steps e thru h.

l. After cleaning the controller, install the screen or access plate and remount the unit in the airplane. Reconnect the .250 inch line and electrical connection, being careful to prevent any leaks at the 250 inch fitting.

13-165. TESTING CABIN ALTITUDE CONTROLLER. Replace controller when any one of the test procedures fail described in Paragraphs 13-165 thru 13-169.

13-166. ELECTRICAL TEST OF THE CABIN ALTITUDE CONTROLLER. (Refer to Figure 13-66)

NOTE

Electrical test may be performed with the controller in the airplane or on the bench.

a. Connect electrical test harness, which may be fabricated as per Figure 13-60, to controller

b. With power to the controller and the ascend/descend switch on earlier models in the OFF position, select an altitude change with the outer altitude change ring.

NOTE

Altitude select knob should not move.

c. Time the altitude selector knob movement as follows:

1. Position the ascend/descend switch to ascend on earlier models and turn the rate of change knob to full decrease. The selector knob should move 200 ± 150 feet per minute.

2. Position the ascend/descend switch to descend on earlier models and turn the rate of change knob to full decrease. The altitude selector knob should move 200 ± 100 feet per minute.

3. Position the ascend/descend switch to ascend on earlier models and turn the rate of change knob to full increase. The altitude selector knob should move 1000 ± 200 feet per minute and the ascend light on earlier models should be on.

4. Position the ascend/descend switch to descend on earlier models and turn the rate of change knob to full increase. The altitude selector knob should move 1000 ± 300 feet per minute and the descend light on earlier models should be on.

d. Check that the altitude change knob stops within 200 feet at the selected altitude.

e. Check the Electro-Luminescent placard for visibility.

NOTE

Use 110 volts AC (400 cps) for best placard lighting visibility.

13-167. VACUUM CHECK OF THE CABIN ALTITUDE CONTROLLER. (Refer to Figure 13-60.)

NOTE

Vacuum check controller installed in the airplane.

a. Remove pneumatic control line from the controller and the isobaric valve. Cap the control line at the controller.

b. Connect a vacuum source with a sensitive rate of change and an altimeter to the control line at the isobaric valve.

NOTE

The vacuum source must have residual volume of between 10 and 15 cubic inches.

c. On earlier models, close the dump valve control and on later models close the access cover to the emergency gear extension lever.

d. Check for leaks in the control line by pulling vacuum of 6500 feet above local pressure altitude and sealing off vacuum source. After the initial dive indication, the rate should settle to 100 feet per minute or less. If the leak is more than 100 feet per minute the leak should be found and corrected.

c Remove the cap from the control line at the controller and connect the line to the cabin controller.

f. Position the altitude selector to 5000 feet above the local altimeter setting and pull vacuum equivalent of 6500 feet of altitude.

g. Seal off the vacuum source and after the initial dive indication, the rate should settle to no more than 400 feet per minute

13-168. VACUUM RELIEF CHECK FOR CABIN ALTITUDE CONTROLLER. (Refer to Figure 13-60.)

NOTE

Check vacuum relief of cabin controller in the airplane.

a. Set the altitude selector to 5000 feet above the local altimeter setting, and pull vacuum equivalent to 6500 feet of altitude.

b. Turn the altitude selector slowly toward the local pressure altitude. The vacuum should be lost when the controller setting reaches 1500 to 1000 feet above the local pressure altitude. A rapid increase in rate of dive will be indicated on the test system rate of climb indicator.

13-169. CALIBRATION CHECK FOR CABIN ALTITUDE CONTROLLER. Before checking calibration, make a vacuum check and a vacuum relief check.

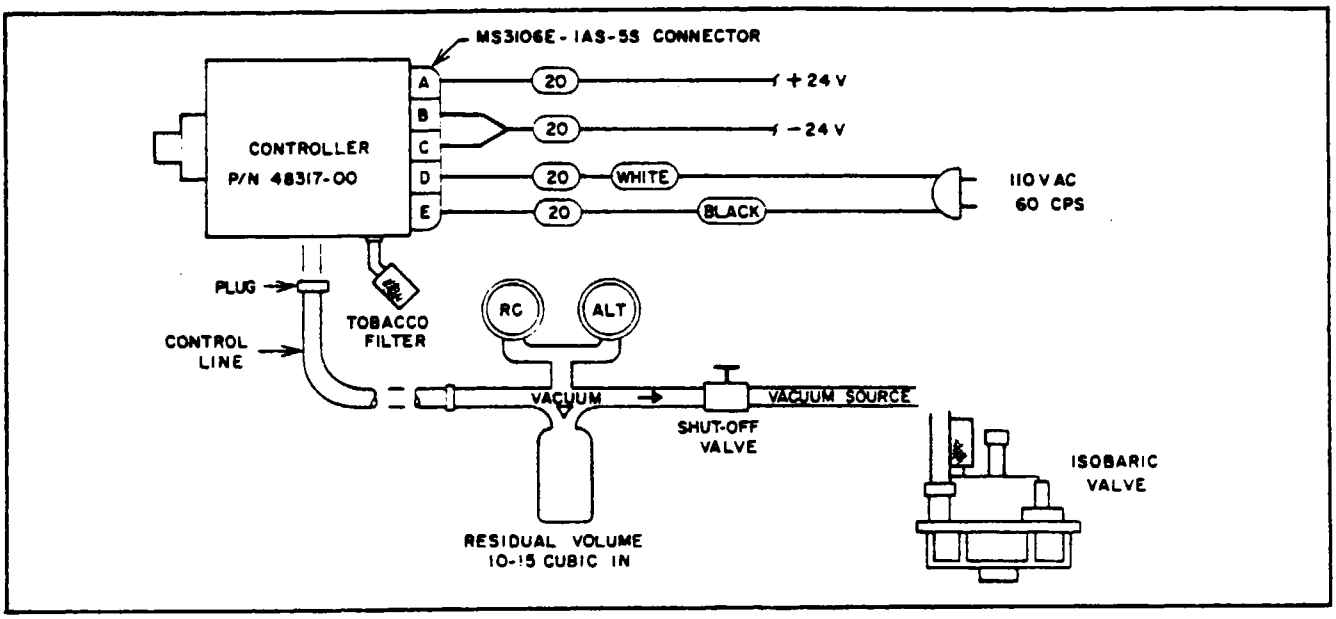

Figure 13-60. Cabin Altitude Controller (Typical)

NOTE

Calibration check can only be made with the controller installed in the airplane.

a. Fly aircraft level at 1000 feet below the altitude equivalent to maximum differential with cabin set to sea level. Approximately 11,000 feet aircraft altitude.

b. With hand carried sensitive altimeter set to 29.92, record the cabin altitude at various controller altitude settings.

c. If the resulting cabin altitudes are within ±300 feet of those selected the unit is in calibration.

d. If it is determined that the controller is out of calibration, refer to Paragraph 13-170 for the calibration procedure.

13-170. CALIBRATION OF CONTROLLER. (Refer to Figure 13-62.) There are two methods by which the controller may be calibrated. Method I is suggested as the easiest, while Method II used only if Method I will not correct the error.

Method I

a. The aircraft should be flown to 11,500 feet and the controller should be progressively set at 1,000 3,000, 5,000 7,000 and 9,000 feet, and the resulting cabin altitude noted from an accurate, hand carried sensitive altimeter, which had been set at 29.92 in. barometric pressure.

b. Care should be exercised in setting the altitude knob accurately on the selected altitude constantly thru out the test. The readings obtained from this test will allow you to compensate the average error. Any error noted must be consistant on either the high or low side to be correctable.

c. If the error noted is 300 feet or less, the condition can be corrected by positioning the knob at 5,000 feet and then using a .078 allen key, loosen the two screws holding the knob and re-position the knob (either high or low) to compensate for the average deviation and then re-tighten the screws.

NOTE

Do not remove the knob during this procedure, as shim washers may be lost. If the knob is accidently removed and shims are lost, the only way that the knob can be replaced is to hold a .032 shim between the knob and the face plate with the knob at the sea level position and then re-tighten the screws and remove the shim. This will allow a .031 clearance between the knob and face plate.

d. If the error removed by repositioning the selector knob was more than 300 feet or if the internal stops in the controller prevents either the sea level or 10,000 foot position to be selected, then the controller must by removed from the airplane and the steps outlined in Method II must be followed.

Method II. (Refer to Figure 13-61.)

a. If the error in calibration is more than 300 feet or the two extreme stops cannot be reached as mentioned in Method I, then the controller must be removed from the panel and an internal adjustment must be made. This is accomplished by removing the round black tab on the side of the case and by using a .050 allen key, the longest screw on the hex plate (which acts as a stop) is loosened and the hex plate re-positioned so that when the stop screw is re-tightened the controller knob will reach approximately 500 feet below sea level and above 10,000 feet when rotated thru full travel.

NOTE

Use only allen keys in good condition and of proper strength as the torque necessary to unloosen and tighten the screws will round the sockets if this suggestion is not followed.

b. To preclude the set screw and hex plate from falling aft of the shaft while making this adjustment, it is recommended that the controller be held in the palm of your hand with the face up and that the allen key be kept on the screw at all times during this procedure.

c. When calibration is completed, the tab is reapplied to the opening and the unit is then ready to install in the aircraft.

13-171. DOOR SEAL SYSTEM.

13-172. DESCRIPTION OF DOOR SEAL SYSTEM. (Refer to Figure 13-61.) The door seal system receives its' pressure from both engine bleed air ports. This bleed air leaves the engines at a temperature of 600° F and a pressure of 90 psi. It then travels to the intercoolers (1) where the heat exchange process is taking place. As the air is cooled it is routed thru check valves and on to a tee in the line at which location a water separator (5) is mounted. This separator removes any moisture from the air before it enters the pressure regulator (6). This regulator decreases the system pressure from 90 psi. down to 18 psi. +1,-3 psi., for door seal and deicer operation (Refer to Section XIV, for Deicer System). Pressure regulator (6) is backed up by a pressure relief valve (7) which cracks open at 21 psi. and becomes full open at 26 psi. should the regulator (6) fail to open. The regulated air is then routed to a three way valve (8) which directs the air to the door seal (9) or dumps the pressure overboard when pressurization is not desired.

50470B 50475S 50600J

1400

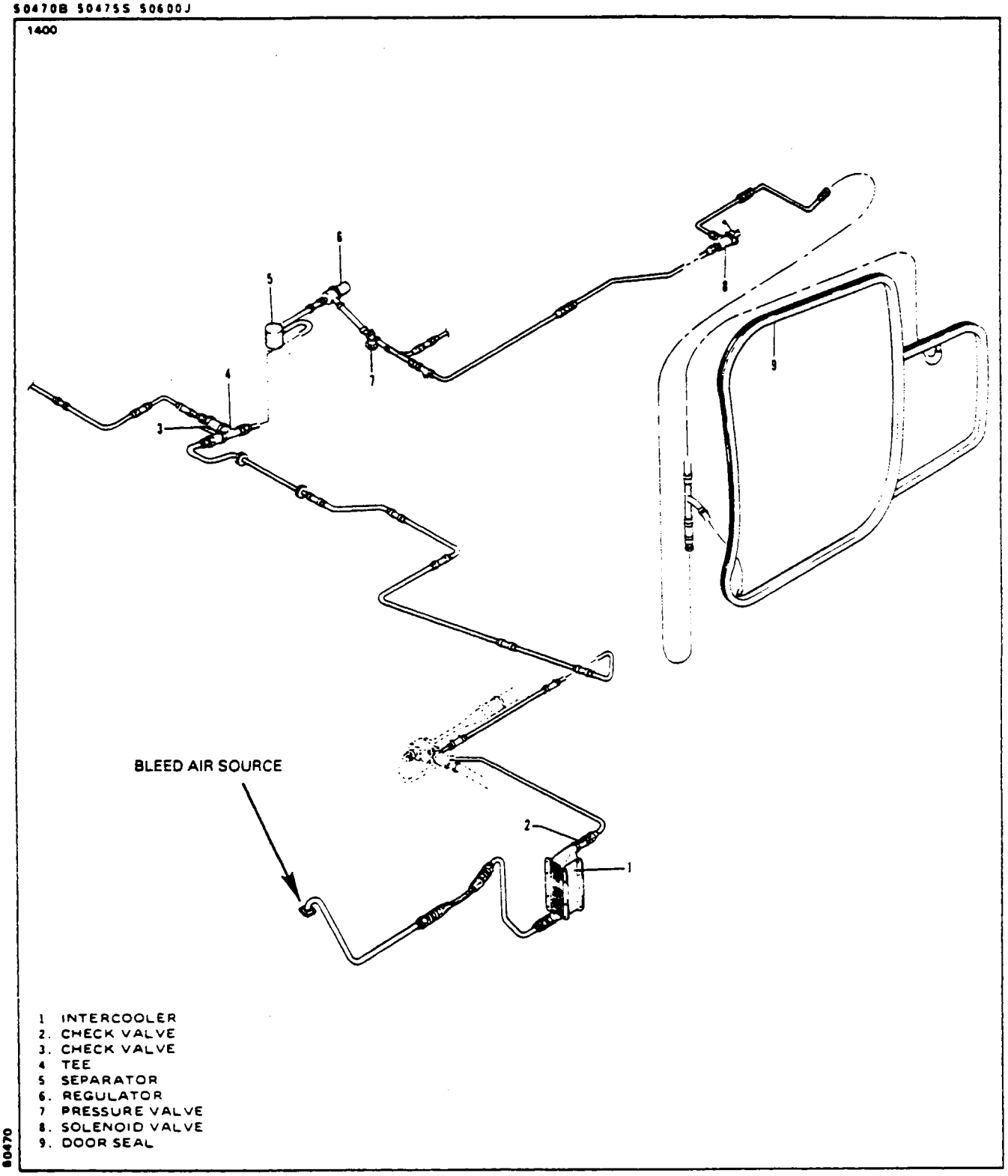

80470

Figure 13-61. Door Seal System

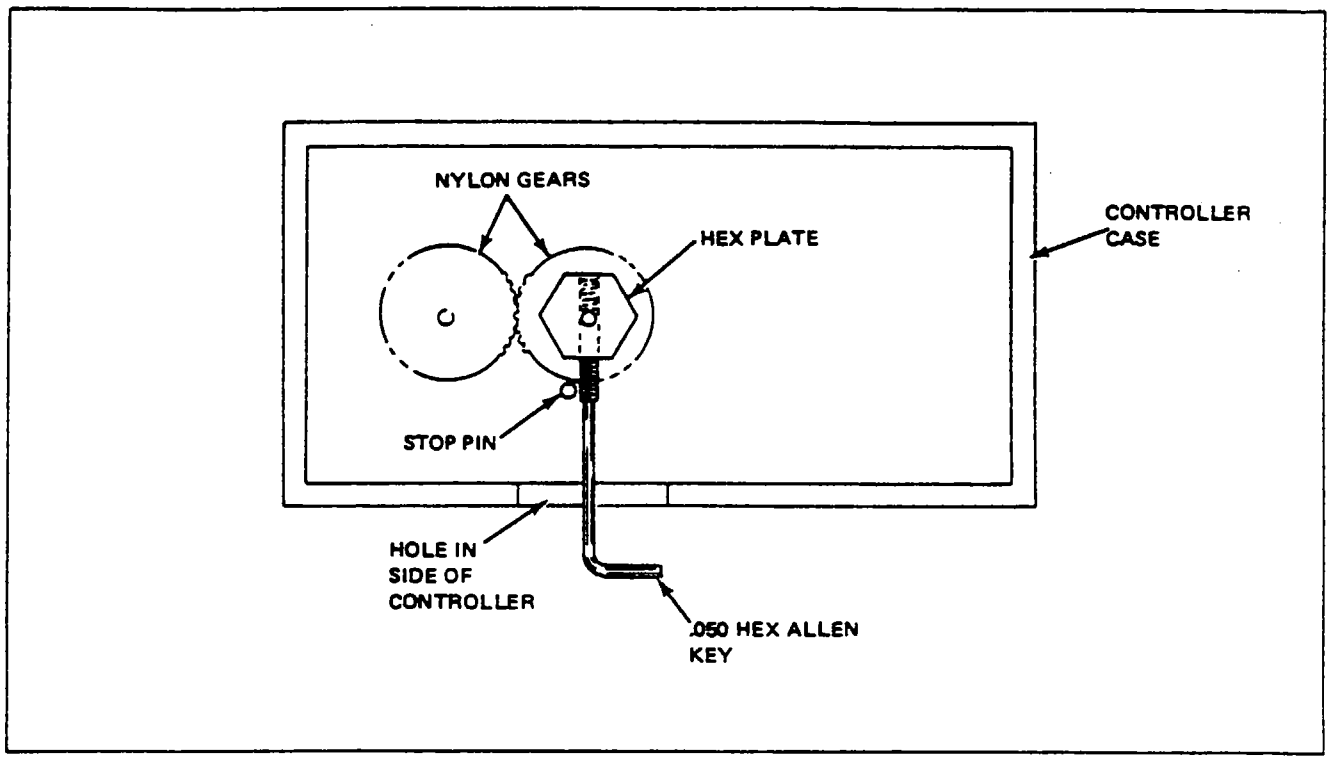

Figure 13-62. Controller Adjustment

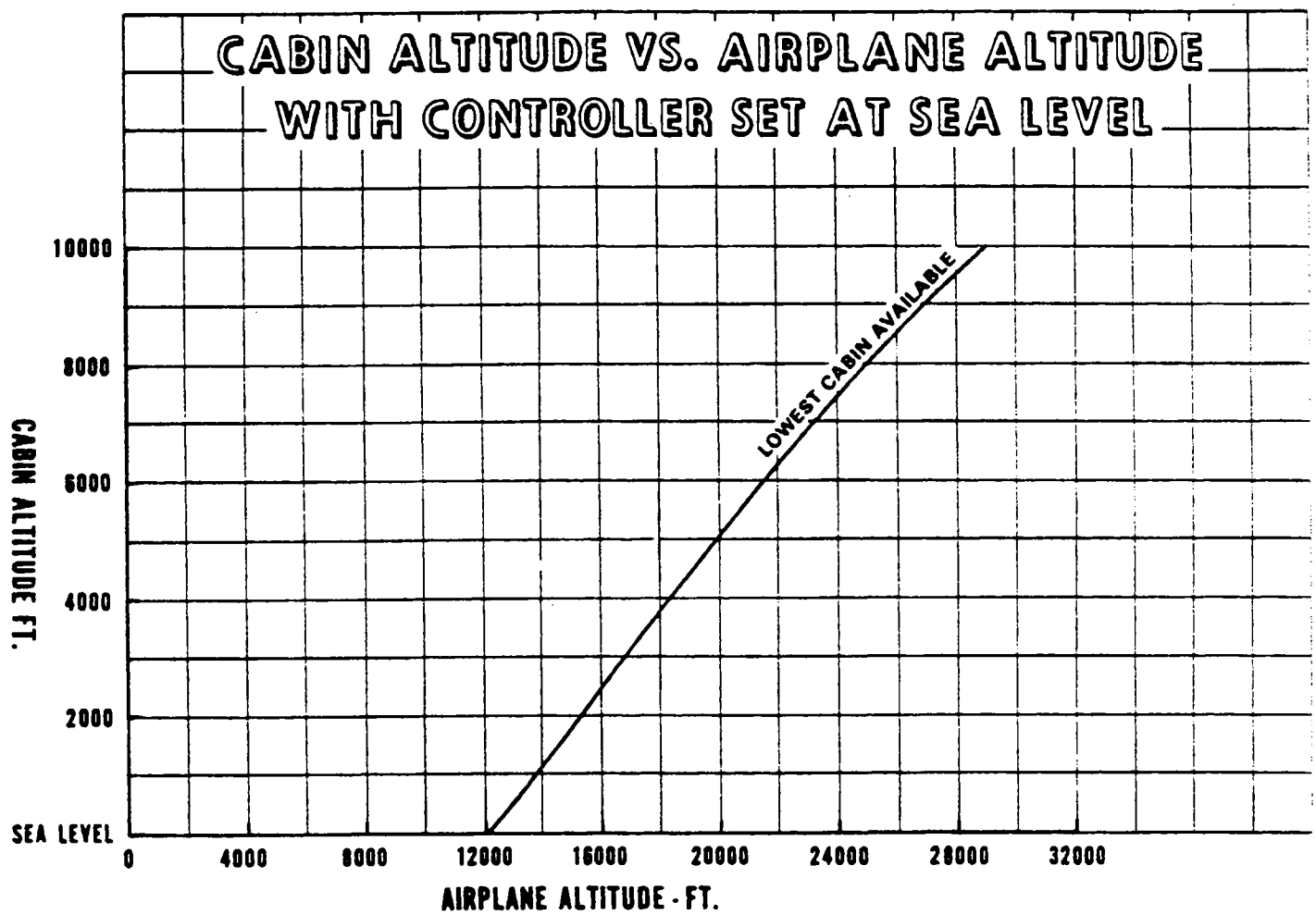

Figure 13-63 Cabin Altitude vs Aircraft Altitude

TABLE XIII-XIA. TROUBLESHOOTING CHART (PRESSURIZATION SYSTEM)

Trouble	Cause	Remedy
Cabin will not pressurize.	Dump valve open.	Close valve; adjust valve control cable.
	Defective isobaric control valve.	Replace valve.
	Bleed setting improperly set on new valve.	Set to specifications. (Refer to Paragraph 13-153.)
	Defective safety valve.	Replace valve.
	Improperly adjusted take-off dive control spring.	Adjust to specifications.
	Defective landing gear safety switch.	Replace switch.
	Faulty electrical wiring.	Replace or repair wiring.
	No pressure to door seal.	Check and repair door seal.
	Excessive leakage in pressurization ducts.	Locate leak and tighten connection.
	Defective pressurized air dump valve.	Replace or repair valve.
	Rupture disc broken.	Refer to the latest revision of Piper Service Letter No. 833.
	Defective cabin altitude control.	Replace cabin altitude control.
	Excessive cabin leakage.	Locate and repair leak.

TABLE XIII-XIA. TROUBLESHOOTING CHART (PRESSURIZATION SYSTEM) (cont.)

Trouble	Cause	Remedy
Cabin will not pressurize. (cont.)	Valve on pressurized air control box won't close.	Adjust or lubricate valve or control linkage.
	Valve on outside air control box won't close.	Adjust or lubricate valve or control linkage.
Cabin pressure will not maintain control setting.	Dump valve partially open.	Close valve; adjust valve control cable.
	Defective isobaric control valve.	Replace valve.
	Defective safety valve.	Replace valve.
	Defective pressurized air dump valve.	Replace or repair valve.
	Defective cabin altitude controller.	Replace cabin altitude controller.
	Pressurization duct leakage.	Locate leak and tighten connection.
	Cabin leakage.	Locate and repair leak.
	Defective rate-of-climb indicator.	Replace.
	Defective cabin altitude pressure gauge.	Replace gauge.
	Isobaric and/or safety valve out of adjustment.	Adjust valves in accordance with Paragraph 13-153.
	Dirty poppet valve in cabin altitude controller.	Clean poppet valve. (Refer to Paragraph 13-164.)

TABLE XIII-XIA. TROUBLESHOOTING CHART (PRESSURIZATION SYSTEM) (cont.)

Trouble	Cause	Remedy
Cabin pressure will not maintain control setting. (cont.)	Foreign matter on isobaric control valve or safety valve seats.	Clean valve seats. (Refer to Paragraph 13-151.)
	Leak in isobaric valve control line.	Locate leak and tighten connection.
	Sticking poppet valve inside controller.	Clean valve seat. (Refer to Paragraph 13-164.)
Cabin pressure excessively high.	Isobaric control valve bleed off and static lines clogged.	Clean bleed off and static vent lines.
	Defective cabin over pressure switch.	Replace.
	Defective cabin altitude pressure gauge.	Replace gauge.
	Safety valve static vent clogged.	Clean vent line.
	Defective safety valve.	Replace valve.
	Isobaric and/or safety valve out of adjustment.	Adjust valves in accordance with Paragraph 13-153.
Cabin climbs well beyond controller setting and initiates with large spike.	Dirty poppet valve in cabin altitude controller.	Clean poppet valve. (Refer to Paragraph 13-164.)

TABLE XIII-XIA. TROUBLESHOOTING CHART (PRESSURIZATION SYSTEM) (cont.)

Trouble	Cause	Remedy
Cabin door unsafe light will not go out.	Latching relay sticking in the open position.	Lubricate the mechanical parts (sparingly) with "Glide Air" or equivalent.
	Switch or switches in door frame out of adjustment.	Adjust per Section XI.
	Defective pressure switch.	Replace switch.
	Short to ground.	Check wiring and repair.
Cabin door unsafe light will not come on.	Circuit breaker open.	Reset circuit breaker.
	Broken wire or loose connection.	Check wiring and repair.
No pressure to door seal.	Leak in door seal pressure system.	Check and repair door seal pressure system.

13-173. PRESSURIZATION SYSTEM (GARRETT).

13-174. DESCRIPTION AND PRINCIPLES OF OPERATION. Pressurization air for the cabin originates from the engine bleed port on each engine. The air leaves the bleed port at a maximum temperature of 600° F and a maximum pressure of 90 psi. It then travels to the intercooler assembly where an air-to-air heat exchange process takes place. From the intercooler assembly the air is routed through a check valve and proceeds to a Piper designed jet pump where it is mixed with ambient air and the pressure is lowered. This air then proceeds to the main pressurization line below the cabin floor. It then passes through the pressurized air control box assembly which controls the flow of air that is to be routed to the cabin or overboard. If the air is not needed for pressurization, the control box is actuated to discharge the air below the cabin floor and allowed to flow overboard. When the control box is closed, the air is directed through the environmental control system and through the air distribution ducts along both sides of the cabin walls. All controls needed for operation and regulation of cabin pressurization are mounted on the lower left side of the instrument panel, along with instruments to simplify the setting and checking of system operation. Both the cabin altitude and rate-of-climb adjustments are made by the pilot, through the use of the cabin altitude selector and the rate-of-change control. This unit is operated pneumatically from the vacuum supply. The rate of ascent or descent is variable from 175 ± 125 feet per minute to 2500 ± 500 feet per minute. A three position electrical dump switch is incorporated into the system to unload cabin pressure. A squat switch on the left main landing gear prevents the cabin from being pressurized while the airplane is on the ground.

13-175. PRESSURIZATION CONTROLS. The controls and instruments used to operate the pressurization system are grouped together to simplify operation. The cabin altitude and rate-of-change are controlled by use of the cabin altitude selector and the cabin rate-of-change control respectively. The altitude instrument indicates cabin pressure altitude in feet, and the rate-of-climb instrument indicates the rate in feet per minute of cabin altitude change The cabin differential pressure gauge indicates the difference between the cabin interior and the outside atmosphere. A differential pressure warning light unit system to warn the pilot if the cabin differential pressure exceeds the limit specified for the aircraft (refer to Table XIII-XI for the differential pressure switch settings). An electrical dump switch having three positions (dump, normal and test) is incorporated in the system to unload cabin pressure rapidly. The aircraft is not approved for landing with the cabin pressurized. A squat switch on the left main landing gear prevents the cabin from being pressurized while the aircraft is on the ground. When testing the pressurization system before takeoff, select the test position on the dump switch. This will override the squat switch to allow testing of the system.

NOTE

Any service to the pressurization system should be accomplished by a shop which is equipped and has qualified personnel to perform this service.

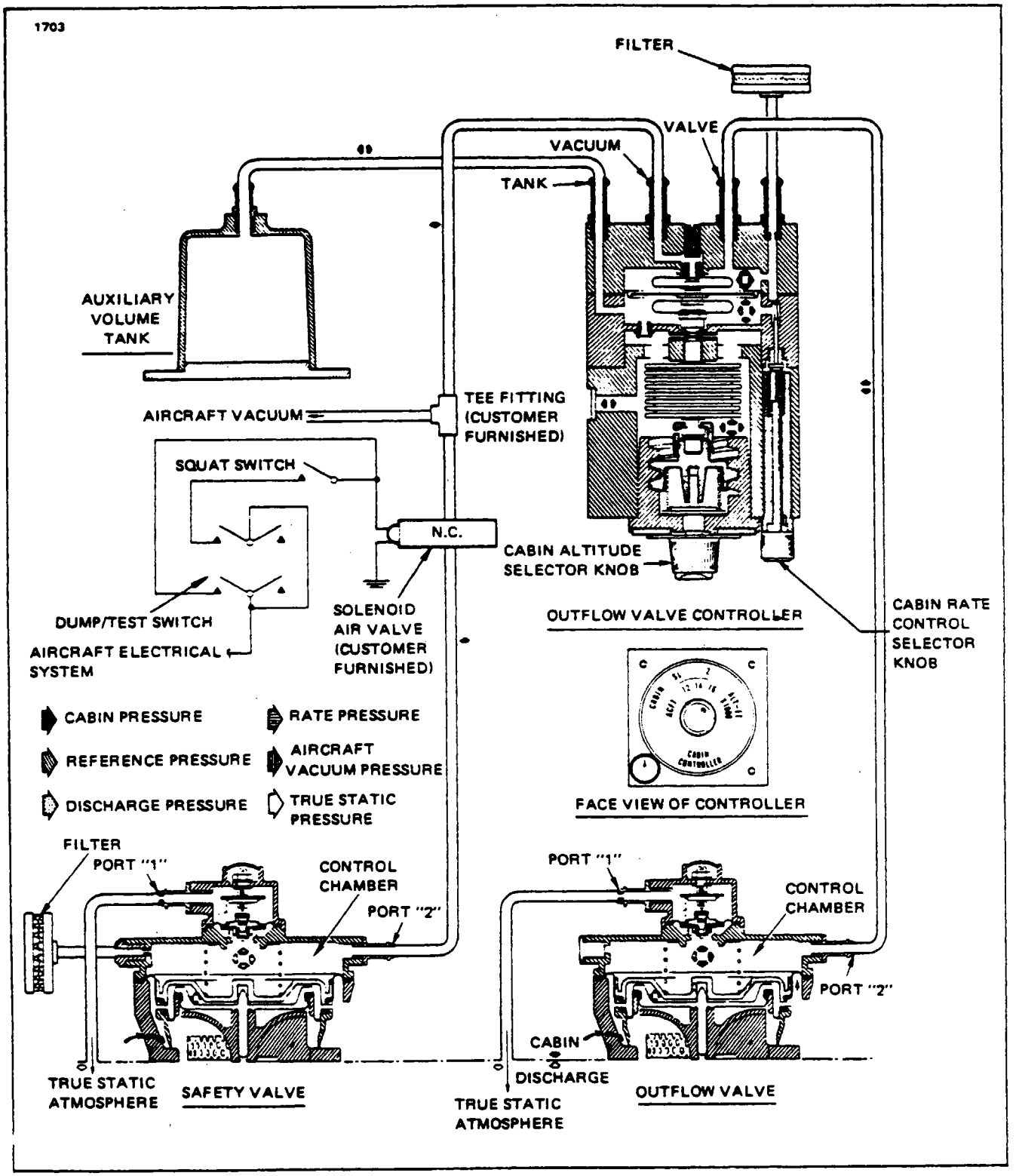

Figure 13-64. Cabin Pressure Control System Schematic (Garrett)

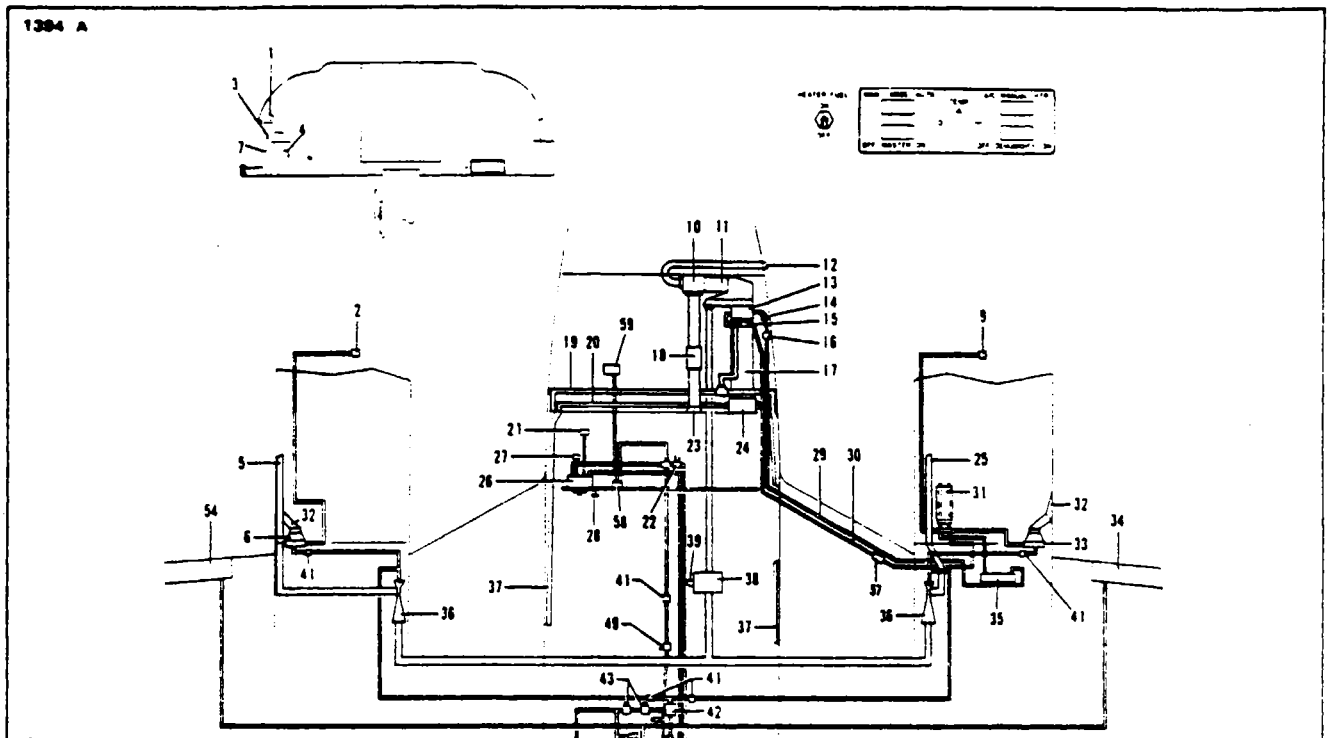

1 PNEUMATIC SYSTEM PRESSURE GAUGE
2. PRESSURIZED AIR BLEED PORT
3. TEST/DUMP SWITCH (MANUAL OVERRIDE)
4 CABIN ALTITUDE SELECTOR
5 AMBIENT AIR INLET
6 INTERCOOLER ASSEMBLY
7 CABIN RATE OF CLIMB GAUGE
8 CABIN DIFFERENTIAL PRESSURE AND CABIN ALTITUDE GAUGE
9 PRESSURIZED AIR BLEED PORT
10 OUTSIDE AIR BOX ASSEMBLY
11 RECIRCULATION FAN
12. OUTSIDE AIR SOURCE
13 EVAPORATOR
14 EXPANSION VALVE
15 EVAPORATOR CONTROL VALVE
16 RECEIVER DEHYDRATOR
17 HEATER
18 RESONATOR
19 FRESH AIR DISTRIBUTION LINE
20 TEMPERATE AIR DISTRIBUTION LINE
21 AUX VOLUME TANK
22. SOLENOID VALVE
23 RECIRCULATING AIR INTAKE
24 TEMPERATE AIR DISTRIBUTION BOX ASSY
25 AMBIENT AIR INLET
26 CABIN ALTITUDE CONTROL ASSEMBLY
27 FILTER
28 PRESSURIZED AND OUTSIDE AIR CONTROL LEVER
29 FREON PRESSURE LINE
30. FREON SUCTION LINE
31 COMPRESSOR
32. INTERCOOLER AIR INLET
33. INTERCOOLER ASSEMBLY
34. DEICER BOOT
35 CONDENSER
36 JET PUMP WITH CHECK VALVE
37. VENTILATION DUCT
38. PRESSURIZED AIR CONTROL BOX ASSEMBLY
39 OVERBOARD DUMP
40 EJECTOR
41. CHECK VALVES
42. SEPARATOR
43. REGULATORS
44. DEICE EJECTOR
45 VALVE (2 WAY)
46. VALVE (3 WAY)
47. LINE (TO DOOR SEAL)
48. LINE (TO EMPENNAGE DEICER BOOTS)
49 VACUUM REGULATOR
50 ISOBARIC VALVE
51 SAFETY VALVE
52 FILTER
53 STATIC VENT LINE
54. DEICER BOOT
55 STATIC VENT LINE
56 CABIN DIFFERENTIAL PRESSURE WARNING SWITCH
57 LOW PRESSURE SWITCH
58 TURN AND BANK INDICATOR
59 FILTER

Figure 13-65. Pressurization System Schematic (Garrett)

13-176. OPERATING INSTRUCTIONS.

a. The following steps should be performed before takeoff to insure proper functioning of the pressurization system:

1. Set cabin altitude selector above field elevation (500 feet).
2. Set manual air control lever in the pressurized air position.
3. Set engine power levers to obtain 70% compressor speed.
4. Activate the test switch to bypass the landing gear squat switch (test position).

NOTE

Hold test switch and observe the cabin rate-of-climb instrument for a descent indication. Within 10 seconds a slight rate of descent should be indicated on the instrument and then returning to zero which indicates a normally operating system.

5. Release the test switch. This will automatically return to the "Normal" position and stop the pressurization of the cabin. The landing gear squat switch will cause the safety valve to open and release the cabin pressure.

b. Takeoff and letdown procedures are as follows:

1. Set cabin altitude selector above field elevation (500 feet).
2. Set manual air control lever in the pressurized air position.
3. After the cabin begins to pressurize, select the cruise altitude desired and adjust the cabin rate-of-climb as desired.
4. Before descending, reset the cabin altitude selector to field elevation plus 500 feet.
5. Adjust the rate-of-change control for a comfortable rate of descent.

NOTE

For a normal letdown, select the 12 o'clock position on the rate knob. For rapid descents, a higher setting should be selected.

13-177. CABIN PRESSURIZATION CHECK. A pressurization check should be conducted whenever 5.30 to 5.50 psi cabin differential cannot be maintained at 70% compressor Ng speed and/or during every 500 hour inspection. The major areas to be considered when troubleshooting the pressurization system are:

a. The engines and bleed system.
b. The cabin pressurization control system.
c. The pressurized vessel of the fuselage.

There are two methods of performing these checks, one is a flight check the other is with the use of a special test unit which can be purchased through Piper Aircraft Corporation. The test unit makes it possible to perform checks b and c in the hanger or shop without operating the engines. During check a, a normal system will show a momentary rise in cabin altitude followed by a return to a stable condition on the rate-of-climb indicator when the engines are both throttled to 70% compressor Ng speed. In order to check the functions of each element in the cabin pressure control system for malfunctions, the aircraft must be flown.

NOTE

There are several uncapped vent ports in both the front and rear pressure bulkheads. These vent ports must remain open and should not be closed off in any way.

13-178. PRESSURIZATION CHECK WITH TEST UNIT. (Refer to Figures 13-53 and 13-54.) The following pressurization test procedure is used to determine if the aircraft fuselage has an acceptable leakage rate. A pressurization test unit as shown in referenced figures will be required to perform the pressurization test.

a. Aircraft Preparation:

1. Remove the access panel on the left inboard side of the right nacelle.
2. Remove the trim panel in front of the isobaric valve and disconnect the control line from the isobaric valve.

CAUTION

DO NOT disconnect the control line from the safety valve.

3. Remove the access panel on the right side of the nose section.
4. Move the pressurization control lever to the pressurized position.

b. Test Unit Hookup:

1. Disconnect the pneumatic line rubber hose connection at nacelle station 121.5 and connect the instrument air line from the test unit to the pneumatic line that goes back through the nacelle. Plug the other side of the pneumatic line. (Refer to Figure 13-54, Sketch A.)
2. Disconnect and remove the fresh air distribution tube from the air distribution box. Cap the hose from the distribution box with a cap plug fabricated per Figure 13-55.
3. Connect the pneumatic or pressurizing air line from the test unit to the distribution tube at the forward pressure bulkhead per Figure 13-54. Make the connection using a fabricated reducer as shown in Figure 13-56.
4. Remove the protective plug from the fitting identified by the placard stating "Cabin Pressure Test" located on the forward pressure bulkhead (station 81). Connect the cabin reference line from the test unit to the fitting. (Refer to Figure 13-54.
5. Connect the test unit to a source of pressurized shop air and electrical power.

c. Test Unit Operation:

1. Deactivate all circuit breakers of operable systems except the cabin pressure control and door seal circuit breakers. Turn on the aircraft electrical power to activate the cabin door seal system.
2. If the airplane has not been placed on jacks, it will be necessary to disconnect electrical power to the vacuum relief solenoid, located above the copilot's rudder pedals behind the instrument panel, to allow the safety valve to close.
3. Set the pneumatic system pressure on the test unit with the regulator control knob to 20 psi. A readjustment may be necessary after door seal inflation of 10 seconds.
4. Turn the flow rate valve knob to the full bypass position, thus allowing the machine to be turned on, then start it.
5. Turn the flow rate knob in, to maintain a 2000 foot per minute rate of descent on the rate change indicator. Allow the cabin differential pressure to rise to 5.0 psi.

NOTE

If no personnel are inside the pressurized cabin, the rate of change can be as high as 6000 feet per minute.

6. When 5.0 psi is reached on the cabin differential gauge, decrease the main flow rate by rotating the flow rate knob until the cabin rate of change gauge indicates zero.

7. Maintain 5.0 psi cabin differential and zero on the rate of change gauge by use of the regulator control on the test unit.

8. Observe the leak rate on the flow gauge. The maximum reading is from 50 to 57 CFM.

NOTE

The reading of the flow gauge on the old unit is taken from the top of the float in the gauge.

9. A reading over 50 to 57 CFM on the flow gauge would indicate a bad leak or series of leaks in the pressure vessel which would require repair.

NOTE

There are several uncapped vent ports in both the front and rear pressure bulkheads which must remain open.

10. After all checks are completed, bring the cabin back down to standard pressure by slowly closing or unscrewing the large flow rate knob. If no one is inside the cabin, a 6000 foot per minute change is okay, otherwise do not exceed a 2000 foot per minute change for purposes of comfort of the individual inside.

CAUTION

The machine cannot be turned off while there is a pressure differential in the cabin for purposes of rapid depressurization; however if the machine is unplugged, the latter result will occur causing serious discomfort to anyone that may be within the cabin.

11. When the checks have been completed, disconnect all the various test unit connections from the aircraft and reconnect the original plumbing.

WARNING

Ascertain that the control line is reconnected to the isobaric valve and the protective plug installed over the instrument reference fitting. Reconnect electrical power to the vacuum relief solenoid.

12. Replace the access panels, trim panels and engine cowling.

13-179. PRESSURIZATION SYSTEM CHECKOUT PROCEDURE. The following procedure has been established to systematically check the function of each element of the cabin pressure control system, so that any single or combination of component malfunctions may be safely detected and corrected. Should a malfunction be detected it is imperative that the malfunction be corrected before continuing to the next step.

13-180. GROUND CHECK.

a. Select outside air source and the normal position of the dump switch prior to engine start up.
b. Set engine power levers to obtain 52% compressor speed.
c. Set cabin altitude selector above field elevation (500 feet).

NOTE

The isobaric and safety valves should both be wide open. This will establish function of the isobaric and safety valves, vacuum supply, solenoid valve, and integrity of the vacuum line, control line and dump line.

d. Select the test position on the dump switch.

NOTE

The safety valve must close in less than 12 seconds, which indicates a clear safety valve filter and operation of the test mode of the dump switch.

13-181. FLIGHT OPERATIONS.

a. Select pressurized air source
b. Select 5000 feet cabin altitude on the cabin altitude controller.
c After takeoff, to check the function of the dump mode perform the following steps
1 Select the dump position on the dump switch.
2. Establish a flight altitude of 4500 feet. Both isobaric and safety valves should be wide open.

d. To assure operation of cabin altitude control, rate operation, volume tank and tank line integrity perform the following steps:

1. Select the Normal position on the dump switch; the safety valve should be in the closed position.
2. Select the 12 o'clock position on the rate knob
3. Slowly rotate the cabin altitude selector knob to 3,000 feet. The isobaric valve should fall toward its seat.

WARNING

Operator should not exceed 2,000 feet per minute.

4. Select the sea level position on the cabin altitude selector knob and rotate the cabin rate control knob counterclockwise to its stop and note a cabin rate of climb between -50 and -300 feet per minute.

e. To assure for differential control perform the following steps:

1. When the cabin altitude reaches sea level, climb to, but do not exceed, 14,000 feet; note the cabin altitude at approximately 1,000 feet and the pressure differential gauge at 5.5 psi.

2. Install a small C-clamp on the isobaric valve ambient sense line and close off the soft rubber tube.

NOTE

The cabin altitude should not change more than 400 feet. This shows the capability of differential control of the safety valve.

3. Remove the C-clamp from the isobaric valve ambient sense line.

4. Install the C-clamp on the safety valve ambient sense line and close off the rubber tube.

NOTE

The cabin altitude should not change more than 400 feet. This shows operation of the isobaric valve assembly.

5. Remove the C-clamp from the safety valve ambient sense line.

THIS SPACE INTENTIONALLY LEFT BLANK

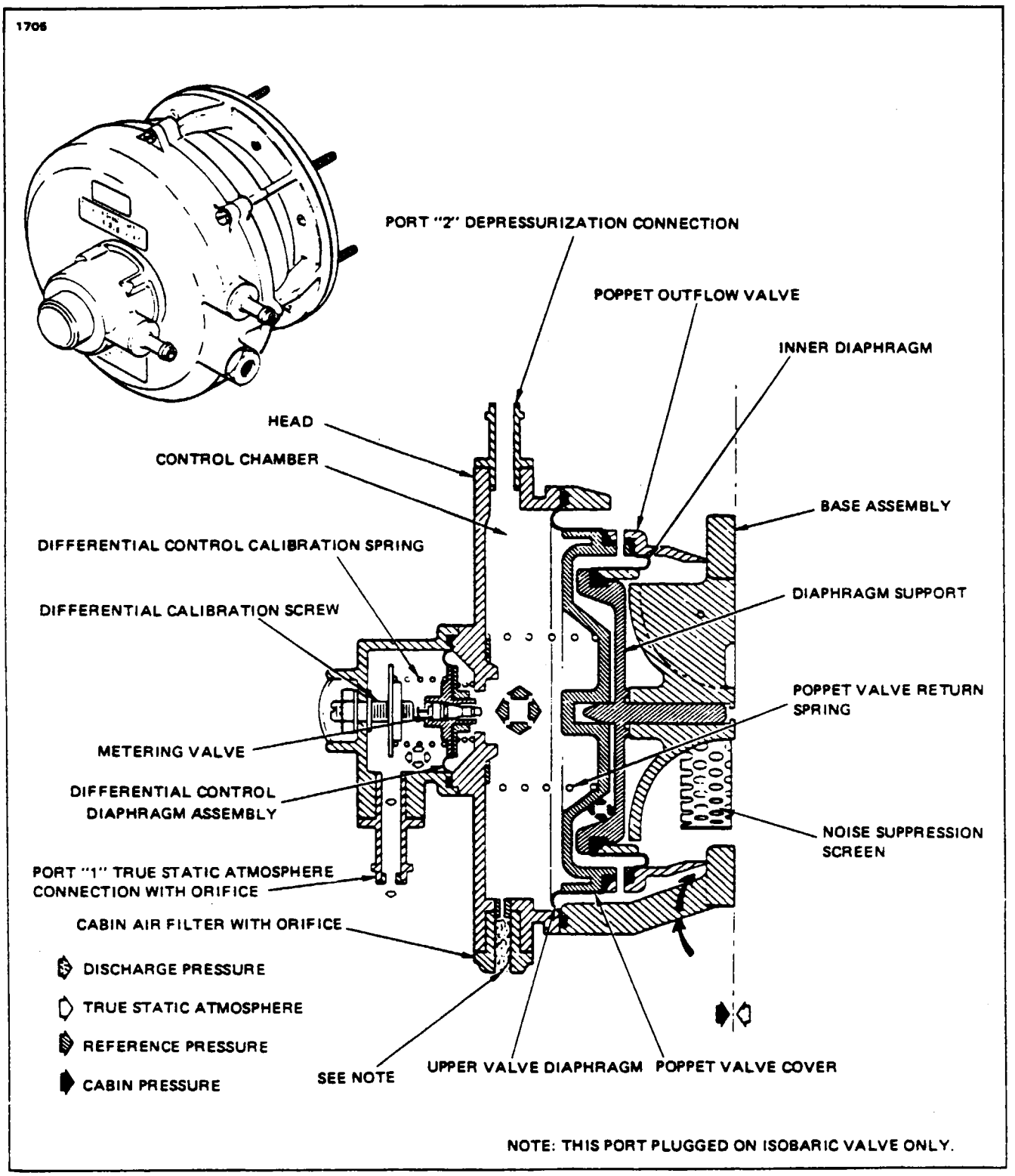

Figure 13-66. Safety or Isobaric Valve Schematic

13-182. DUMP SOLENOID VALVE FUNCTION. The aircraft is equipped with an electrical dump switch which activates the vacuum relief solenoid valve. This applies a vacuum to fully open the safety valve, allowing rapid equalization of the cabin to ambient pressure differential.

13-183. ISOBARIC VALVE FUNCTION. Three states of operation exist for the isobaric valve in flight, they are: open, modulating and closed. The isobaric valve is controlled by the isobaric controller which is an adjustable aneroid controlled orifice, that applies a vacuum if the controller setting is above the cabin altitude.

The open state in flight, with full cabin flow, results in an unpressurized cabin.

The modulated state occurs as the cabin pressure altitude passes through the controller setting.

The closed state occurs when the cabin inflow is less than the cabin leak rate.

13-184. SAFETY VALVE FUNCTION. The safety valve is closed during isobaric control, and opens to control at normal full differential.

NOTE

Check aircraft logbook for compliance with the latest revision of Garrett Airesearch Service Bulletin No. 52243.

13-185. ISOBARIC AND SAFETY VALVE COMBINED FUNCTION. The isobaric valve is the normal pressure regulating valve while in flight, and limits the cabin pressure differential at the safety set point, where as the safety valve is used for backup pressure relief control at the safety set point.

Both the isobaric and safety valves in the system are designed to open automatically and fully when a negative pressure differential of .43 psi (7" H20) is applied.

The combined capacity of both valves is such that the failure of any one valve would not allow cabin pressure differential to exceed 5.5 psi.

13-186. ISOBARIC AND/OR SAFETY VALVE REMOVAL.

a. Remove the trim panel in front of the safety and isobaric valves located in the rear pressure bulkhead.

b. Remove the access panel on the left side of the tail section just aft of the entrance door if the isobaric valve is being removed or remove the access panel on the right side if the safety valve is being removed.

c. Disconnect the lines to the valve being removed.

d. Reaching through the tail section access hole, remove the small access plate behind the valve being removed.

e. Working through this small access hole, remove the three locknuts which secure the valve to be removed.

f. Remove the valve from the pressure bulkhead.

13-187. ISOBARIC AND/OR SAFETY VALVE INSTALLATION.

a. Position the valve being installed onto the shelf in the rear pressure bulkhead.

b. Working through the small access opening in the rear of the pressure bulkhead install the three locknuts which hold the valve in place and tighten to metal contact and then backing off 1/4 turn.

c. Install the small access plate on the rear of the pressure bulkhead.

d. Install the access plate removed from the side of the tail section.

e. Connect the lines removed from the valve.

f. Install the trim panel in front of the valves after making sure acoustical material is in good condition.

13-188. ISOBARIC AND SAFETY VALVE CLEANING. Routine maintenance of components of the cabin pressure control system is limited to the replacement of the filter in the cabin air pressure safety valve and cleaning of seats in the isobaric and safety valves. Clean the seats of the isobaric and safety valves thoroughly, using Joy detergent or isopropyl alcohol every 100 hours.

NOTE

There is a tobacco tar filter installed on the safety valve and isobaric controller. This is a disposable type filter and must be replaced every 500 hours of normal use. Refer to Parts Catalog for part number of replacement filter.

13-189. SAFETY VALVE FILTER REPLACEMENT.

a. Remove the trim panel in front of the safety and isobaric valves located in the rear pressure bulkhead.
b. Unscrew the filter from the valve.
c. Screw on replacement filter hand tight only. Overtorque will break the plastic valve.
d. Install the trim panel in front of the valves.

13-190. CABIN ALTITUDE CONTROLLER.

13-191. REMOVAL OF CONTROLLER.

a. Disconnect the lines from the rear of the cabin altitude controller assembly. Cap the open parts of the lines and fittings to prevent dust from entering the system.
b. Remove the three screws which secure the selector to the instrument panel.
c. Remove the controller by lifting the assembly from the rear of the instrument panel.

13-192. INSTALLATION OF CONTROLLER.

a. Position the controller into the instrument panel cutout from the forward side of the panel.
b. Secure the controller to the instrument panel with three screws
c. Remove the protective caps from the lines and fittings of the selector and connect the lines to the fittings on the rear of the controller.

13-193. CONTROLLER FILTER REPLACEMENT. There is a tobacco tar filter installed in the pressurization system behind the controller. This is a disposable type filter which must be replaced every 500 hours of normal use. Refer to the Parts Catalog for part number of replacement filter.

a. The filter is accessible from underneath the instrument panel.
b. Remove the filter from behind the controller and discard.
c. Install the new filter in place.

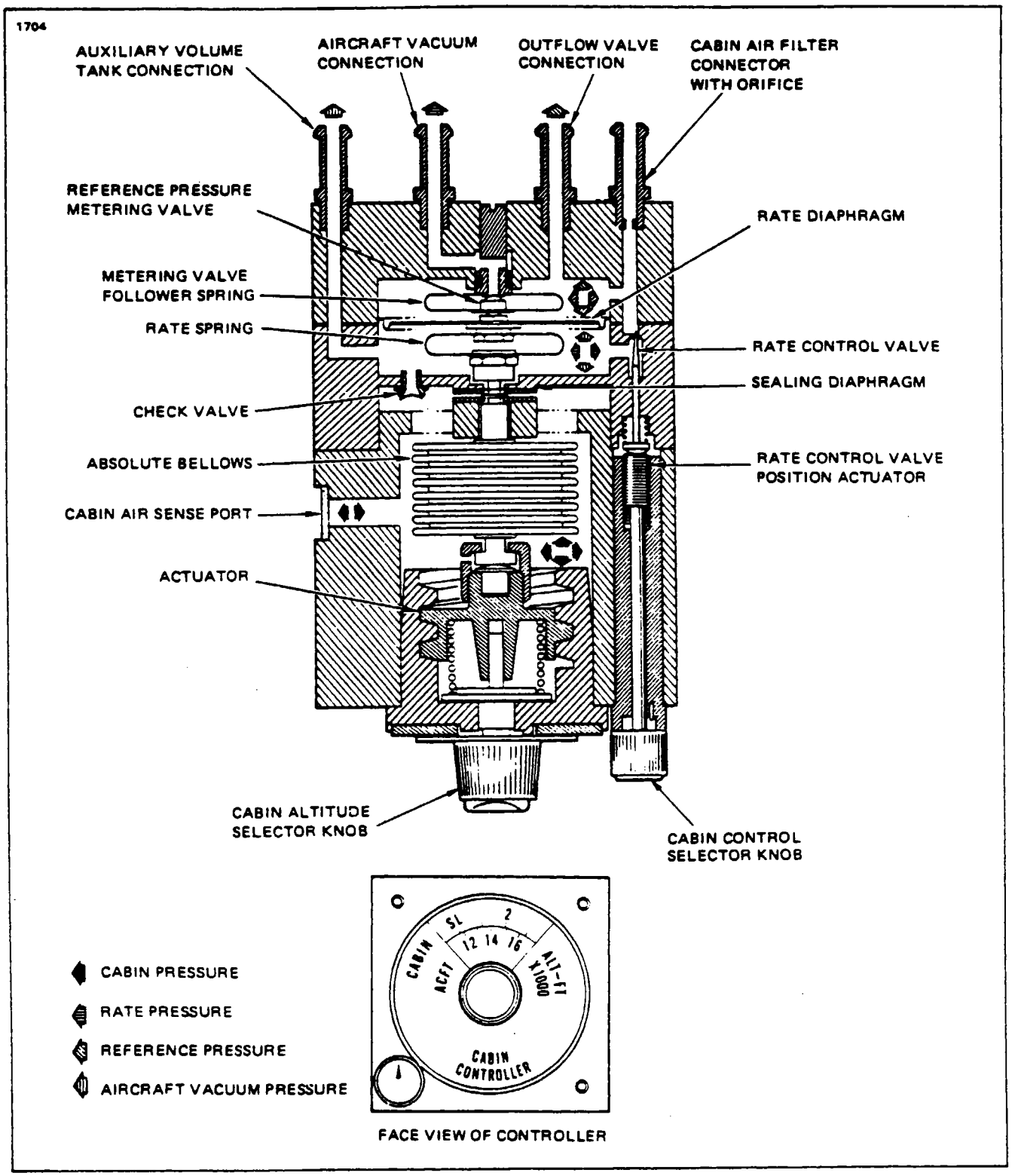

Figure 13-67. Cabin Air Pressure Outflow Valve Controller Schematic

TABLE XIII-XII. TROUBLESHOOTING CHART (PRESSURIZATION SYSTEM)

Trouble	Cause	Remedy
Cabin will not pressurize.	Blocked safety valve cabin air filter or orifice.	Replace filter and check orifice.
	Blocked controller cabin air filter with orifice.	Clean filter and check orifice on controller.
	Internal malfunction in the isobaric valve.	Remove and replace.
	Internal malfunction in the safety valve.	Remove and replace.
	Internal malfunction in the controller.	Remove and replace controller.
	Defective landing gear safety switch.	Remove and replace switch.
	Defective dump/test switch.	Replace switch.
	No pressure to door seal.	Check and repair door seal.
	Excessive leakage in pressurization ducts.	Locate leak and tighten connections.
	Excessive cabin leakage.	Locate and repair leak.
	Solenoid valve malfunctions in the open position.	Replace valve.
	Valve on pressurized air control box won't close.	Adjust or lubricate valve or control linkage.
	Valve on outside air control box won't close.	Adjust or lubricate valve or control linkage.
Cabin pressurizes to full positive differential pressure after takeoff.	Vacuum tube not connected to controller.	Connect vacuum tube.
	Malfunction in aircraft vacuum supply.	Check aircraft vacuum supply.
	Rupture in volume tank.	Replace tank.

TABLE XIII-XII. TROUBLESHOOTING CHART (PRESSURIZATION SYSTEM) (cont)

Trouble	Cause	Remedy
Cabin pressurizes to full positive differential pressure after takeoff. (cont)	Internal malfunction in the isobaric valve.	Remove and replace valve.
	Internal malfunction in the controller.	Remove and replace controller.
Cabin altitude decreases below selected altitude.	Low aircraft vacuum supply.	Check aircraft vacuum supply.
	Minor leak in tube between controller and volume tank or in volume tank.	Remove and replace tube or volume tank.
	Minor leak in tube between controller and isobaric valve or in isobaric valve.	Remove and replace tube or isobaric valve.
	Minor leak in the controller.	Remove and replace controller.
Minimum rates unbalanced, down rate faster than up rate.	Minor leak in tube between controller and volume tank or in volume tank.	Remove and replace tube or volume tank.
	Minor leak in the controller.	Remove and replace controller.
Higher unpressurized operation before takeoff and after landing.	Solenoid valve malfunction in the closed position.	Replace valve.
	Landing gear switch or test/dump switch malfunction in the open position.	Remove and replace switch.
	Broken wiring to the vacuum relief solenoid.	Repair wiring.
	Loose or damaged pneumatic tube between solenoid valve and safety valve.	Check tube connections or replace damaged tube.
	Internal malfunction in the safety valve.	Remove and replace valve.

TABLE XIII-XII. TROUBLESHOOTING CHART (PRESSURIZATION SYSTEM) (cont)

Trouble	Cause	Remedy
Cabin exceeds full positive differential calibrated setting.	True static atmosphere tube not connected on isobaric valve and safety valve.	Securely connect true static atmosphere tube on isobaric valve and safety valve.
	Loose or damaged pneumatic tubing from port "1" of safety and isobaric valve to atmosphere.	Repair or replace tubing.
Cabin climbs and descends at a fixed rate regardless of rate selection.	Internal malfunction in controller.	Remove and replace controller.
Cabin rate exceeds selected rate valve during aircraft climb to cruise altitude.	Malfunction in controller.	Remove and replace controller.
	Defective cabin rate of climb indicator.	Remove and replace indicator.
Cabin pressure rapidly increases or decreases with reselection of cabin altitude.	Malfunction in controller.	Remove and replace controller.
Cabin altitude exceeds selected value.	Loss of airflow into cabin.	Repair or replace.
	Internal malfunction in isobaric valve.	Remove and replace valve.
	Internal malfunction in safety valve.	Remove and replace valve.
	Internal malfunction in controller.	Remove and replace controller.
	Excessive cabin leak rate.	Seal leaks.
Cabin pressure will not maintain control setting.	Dump valve partially open.	Close valve; adjust valve control cables.
	Defective isobaric control valve.	Remove and replace valve.
	Defective safety valve.	Remove and replace valve.

TABLE XIII-XII. TROUBLESHOOTING CHART (PRESSURIZATION SYSTEM) (cont)

Trouble	Cause	Remedy
Cabin pressure will not maintain control setting. (cont)	Defective pressurized air dump valve.	Remove or repair valve.
	Defective cabin altitude controller.	Remove and replace cabin altitude controller.
	Pressurization duct leakage.	Locate leak and tighten connection.
	Cabin leakage.	Locate and repair leak.
	Defective cabin altitude pressure gauge.	Remove and replace gauge.
	Foreign matter on isobaric control valve or safety valve seats.	Clean valve seats.
	Leak in isobaric valve control line.	Locate leak and tighten connection.
Cabin pressure excessively high.	Isobaric static line clogged.	Clean static line.
	Defective cabin over pressure switch.	Remove and replace switch.
	Defective cabin altitude pressure gauge.	Remove and replace gauge.
	Safety valve static vent clogged.	Clean vent line.
	Defective safety valve.	Remove and replace valve.
Cabin door unsafe light will not go out.	Latching relay sticking in the open position.	Lubricate the mechanical parts (sparingly) with "Glide Air" or equivalent.
	Switch or switches in door frame out of adjustment.	Adjust per Section XI.
	Defective pressure switch.	Replace switch.
	Short to ground.	Check wiring and repair.

TABLE XIII-XII. TROUBLESHOOTING CHART (PRESSURIZATION SYSTEM) (cont)

Trouble	Cause	Remedy
Cabin door unsafe light will not come on.	Circuit breaker open.	Reset circuit breaker.
	Broken wire or loose connection.	Check wiring and repair.
No pressure to door seal.	Leak in door seal pressure system.	Check and repair door seal pressure system.

5H20 THRU 5L24

INTENTIONALLY LEFT BLANK

Cheyenne

AIRPLANE

SERVICE MANUAL

CARD 6 OF 8

PA-31T CHEYENNE

PA-31T CHEYENNE II

PA-31T1 CHEYENNE I

PA-31T1 CHEYENNE IA

PA-31T2 CHEYENNE II XL

PIPER AIRCRAFT CORPORATION

PART NUMBER 753 826

6A1

JULY 2, 1984
INTERIM REVISION: OCTOBER 15, 1997

SERIAL NUMBER INFORMATION

PA-31T, CHEYENNE

Serial Numbers 31T-7400002 to 31T-7720069 inclusive.

PA-31T, CHEYENNE II

Serial Numbers 31T-7820001 to 31T-8120104 inclusive.

PA-31T1, CHEYENNE I

Serial Numbers 31T-7804001 to 31T-8104101 inclusive.

PA-31T1, CHEYENNE IA

Serial Numbers 31T-8304001 to 31T-8304003 inclusive;
(then, serial number series changed to)
Serial Numbers 31T-1104004 to 1104017 inclusive.

PA-31T2, CHEYENNE II XL

Serial Numbers 31T-8166001 to 31T-8166076 inclusive;
(then, serial number series changed to)
Serial Numbers 31T-1166001 to 1166008 inclusive.

AEROFICHE EXPLANATION AND REVISION STATUS

Service manual information incorporated in this set of Aerofiche cards has been arranged in accordance with general specifications of Aerofiche adopted by General Aviation Manufacturer's Association, (GAMA).

Information compiled in this Aerofiche Service Manual will be kept current by revisions distributed periodically. These revisions supersede all previous revisions and are complete Aerofiche card replacements and supersede Aerofiche cards of same number in set.

Conversion of Aerofiche alpha/numeric code numbers:
First number is Aerofiche card number.
Letter is horizontal line reference per card.
Second number is vertical line reference per card.
Example: 2J16 Aerofiche card number two of given set, Grid location J16.

To aid in locating the various chapters and related service information desired, the following is provided:

1. At the beginning of Aerofiche Card No. 1:
   a. A complete Section Index for all fiche in this set.
   b. A complete list of Illustrations for all fiche in this set.
   c. A complete list of Tables for all fiche in this set.
   d. A complete list of Charts for all fiche in this set.
2. At the beginning of each subsequent Aerofiche Card:
   a. A complete Section Index for all fiche in this set.
   b. A complete list of Illustrations for that fiche only.
   c. A complete list of Tables for that fiche only.
   d. A complete list of Charts for that fiche only.
3. A complete Table of Contents showing paragraph titles and appropriate grid location numbers is given at the beginning of each Section relating to the information within that Section.
4. Identification of revised material:
   Revised text and illustrations are indicated by a black vertical line along the left-hand margin of the frame, opposite revised, added or deleted material. Revision lines indicate only current revisions with changes and additions to or deletions of existing text and illustrations. Changes in capitalization, spelling, punctuation, indexing, physical location of material, or complete page additions are not identified by revision lines.

AEROFICHE EXPLANATION AND REVISION STATUS (cont)

5. Revisions to Service Manual 753 826 issued December 1973 are as follows:

Revision	Publication Date	Aerofiche Card Effectivity
ORG731208	December 8, 1973	
CR810206	February 6, 1981	1, 2, 3, 4, 5, 6, 7 and 8
PR810923	September 23, 1981	1, 2, 3, 4, 5, 6, 7 and 8
PR810925	September 25, 1981	1 Only
PR820215	February 15, 1982	1, 2, 3, 4, 5, 6, 7 and 8
PR821015	October 15, 1982	1, 2, 3, 4, 5, 6, 7 and 8
PR830425	April 25, 1983	1, 2, 3, 4, 5, 6, 7 and 8
PR840105	January 5, 1984	1, 2, 3, 4, 5, 6, 7 and 8
PR840323	March 23, 1984	1, 2, 3, 4, 5, 6, 7 and 8
PR840702	July 2, 1984	1, 2, 3, 4, 5, 6, 7 and 8
IR860220	February 20, 1986	3
IR860430	April 30, 1986	3
IR860821	August 21, 1986	1
IR871009	June 15, 1988	2
IR900313	March 13, 1990	1
IR941019	October 19, 1994	1 and 2
IR950320	March 20, 1995	1
IR971015 *	October 15, 1997	1, 2, 3, 4, 5, 6, 7 and 8

*** INTERIM REVISION TO SERVICE MANUAL 753-826**

Revisions appear in all eight Aerofiche cards. Discard your entire existing Aerofiche card set (Cards 1 - 8) and replace it with the revised Aerofiche card set (Cards 1 - 8) dated 10/15/97.

Consult the Customer Service Information Catalog Aerofiche (P/N 1753-755) for current revision dates for this manual.

SECTION INDEX

SECTION	AEROFICHE CARD NO. 1	GRID NO.
I	INTRODUCTION	1A19
II	HANDLING AND SERVICING	1A22
III	INSPECTION	1D23
IV	STRUCTURES	1E13
V	SURFACE CONTROLS	1I8
	AEROFICHE CARD NO. 2	
VI	HYDRAULIC SYSTEM	2A10
VII	LANDING GEAR AND BRAKE SYSTEM	2D19
VIII	POWER PLANT (PA-31T AND PA-31T1)	2I11
	AEROFICHE CARD NO. 3	
VIIIA	POWER PLANT (PA-31T2)	3A8
IX	FUEL SYSTEM	3D7
X	INSTRUMENTS	3F2
	AEROFICHE CARD NO. 4	
XI	ELECTRICAL SYSTEM	4A7
	AEROFICHE CARD NO. 5	
XII	ELECTRONICS	5A9
XIII	ENVIRONMENTAL CONTROL SYSTEM (PA-31T AND PA-31T1)	5B1
	AEROFICHE CARD NO. 6	
XIIIA	ENVIRONMENTAL CONTROL SYSTEM (PA-31T2)	6A8
XIV	ACCESSORIES AND UTILITIES	6C1
	AEROFICHE CARD NO. 7	
XV	ELECTRICAL SCHEMATICS (PA-31T AND PA-31T1)	7A5
	AEROFICHE CARD NO. 8	
XVA	ELECTRICAL SCHEMATICS (PA-31T2)	8A5

LIST OF ILLUSTRATIONS

Figure		Aerofiche Grid No.
13A-1.	Cabin Pressure Control System Schematic	6A11
13A-2.	Cabin Pressurization (PA-31T2)	6A12
13A-3.	Safety and Outflow Valves	6A14
13A-4.	Cabin Air Pressure Outflow Valve Controller	6A15
13A-5.	Fabricated Reducer Pressure Test Adapter	6A17
13A-6.	Cabin Pressure Test Unit (Typical)	6A17
13A-7.	Pressurization Test Hookup	6A18
13A-8.	Cabin Altitude Vs. Airplane Altitude	6A23
13A-8a.	Door Seal System	6B2
13A-9.	Environmental Control System	6B9
13A-10.	Cabin Pressurization and Bleed Air System Schematic	6B11
13A-11.	ECS Test Harness Extension	6B19
13A-12.	Cabin Comfort	6B20
14-1.	Oxygen System Installation (PA-31T and PA-31T1)	6C7
14-2.	Oxygen System Installation (PA-31T2)	6C8
14-3.	Propeller and Engine Air Inlet Lip Deicer System	6C15
14-4.	Electrical Diagram Showing Cycle Sequence	6C16
14-5.	Electrical Diagram Showing Cycle Sequence	6C16
14-6.	Electrical Diagram Showing Cycle Sequence	6C17
14-7.	Electrical Diagram Showing Cycle Sequence	6C17
14-8.	Suggested Use of Dial Indicator	6C21
14-9.	Centering of Brushes on Slip Rings	6C22
14-10.	Brush Block Assembly	6C23
14-11.	Angle of Contact-Brushes to Slip Rings	6C24
14-12.	Brush Module Assembly (3E2011)	6D1
14-13.	Alternate Module S tacking Arrangement	6D1
14-14.	Modular Brush Assembly (3E2044-1)	6D1
14-15.	Wiring Diagram, Propeller and Engine Air Inlet Lip Deicing System	6D3
14-16.	Repair of Lead Strap	6D5
14-17.	Propeller Deicer Installation	6D6
14-18.	Engine Air Inlet Lip Deicer Installation	6D7
14-19.	Sealer Application (Prop Boot)	6D14
14-20.	Sealer Application (Lead Strap)	6D14
14-21.	Terminal Clamp Assembly	6D14
14-22.	Wrinkled Deicers	6D15
14-23.	Propeller Blade in Feather Position	6D20
14-24.	Pneumatic Deicer System Installation	6E6
14-25.	Pneumatic Deicer Boots Operation	6E8
14-26.	Pneumatic Deicer System Schematic	6E8
14-27.	Marking and Cutting Scuff	6E15
14-28.	Routing Scuff	6E15
14-29.	Buffing Edge of Repair	6E16
14-30.	Hole Through Surface of Tube	6E16

LIST OF ILLUSTRATIONS (cont.)

Figure		Aerofiche Grid No.
14-31.	Routing to Tube Fabric	6E17
14-32.	Cutting Surface of Tube	6E17
14-33.	Cementing Buffed Area and Patch	6E18
14-34.	Applying and Stitching Fabric	6E18
14-35.	Placing and Stitching Gum	6E19
14-36.	Removing Trapped Air	6E19
14-37.	Masking Repair	6E20
14-38.	Applying Neoprene Putty	6E20
14-39.	Propeller Synchronizer Installation	6F5
14-40.	Propeller Synchronizer Schematic	6F8
14-41.	Propeller Synchronizer Rigging (Left Engine Only)	6F10
14-42.	Trimmer Assembly	6F11
14-43.	Test Instrument T-46192	6F14
14-44.	Propeller Synchrophaser Installation (Woodward Type 1)	6F18
14-45.	Propeller Synchrophaser Diagram (Woodward Type 1)	6F22
14-46.	Propeller Synchrophaser Rigging (Left Engine Only)	6F24
14-47.	Trimmer Assembly	6G1
14-48.	10 Pin to 8 Pin Plug Adapters, P/N 5401-018	6G4
14-49.	Test Instrument, WT 46192	6G5
14-50.	Propeller Synchrophaser Installation (Woodward Type 11)	6G9
14-51.	Propeller Synchrophaser Diagram (Woodward Type 11)	6G13
14-52.	Engine Fire Detectors	6G19
14-53.	Engine Fire Control System	6G21
14-54.	Engine Fire Extinguisher	6G22
14-APP-1	Determining Depth of Craze	6H3
14-APP-2	Visual Inspection	6H6
14-APP-3	Crack Limitations	6H7

LIST OF TABLES

Table		Aerofiche Grid No.
XIIIA-I.	Cabin Differential Pressure Switch Specifications	6A21
XIIIA-IA.	Troubleshooting (PA-31T2 Pressurization System)	6B3
XIIIA-II.	Troubleshooting (PA-31T2 Environmental Control System)	6B16
XIV-I.	Oxygen System Components Limits	6C9
XIV-II.	Troubleshooting Chart (Oxygen System)	6C11
XIV-III.	Power Requirement for 28 VDC System.	6D3
XIV-IV.	Required Materials for Repair of Deicers	6D9
XIV-V.	Electrical Resistance	6D16
XIV-VA.	Electrical Resistance-Lip Deicer (S/N 31T-8304001 and up)	6D16
XIV-VB.	Lip Deicer-Temperature/Sensor Check	6D17
XIV-VI.	Troubleshooting Chart (Engine Deicer System)	6D22
XIV-VII.	Operating Pressures	6E7
XIV-VIII.	Materials and Supplies for Cold Repairs	6E10
XIV-IX.	Materials for Vulcanized Repairs	6E12
XIV-X.	Equipment and Tools for Vulcanized Repairs	6E14
XIV-XI.	Troubleshooting Pneumatic Deicer System	6F2
XIV-XII.	Synchronizer Wiring Test	6F6
XIV-XIII.	Aircraft Wiring Check with Actuator Removed	6F12
XIV-XIV.	Troubleshooting Chart (Actuator)	6F13
XIV-XV.	Troubleshooting Chart (Propeller Synchronizer)	6F15
XIV-XVI.	Synchrophaser Wiring Test (Woodward Type 1)	6F19
XIV-XVII.	Bench Testing the Actuator	6G3
XIV-XVIII.	Troubleshooting Chart (Actuator)	6G4
XIV-XIX.	Troubleshooting Chart (Propeller Synchrophaser) (Woodward Type 1)	6G6
XIV-XX.	Synchrophaser Wiring Test (Woodward Type 11)	6G11
XIV-XXI.	Magnetic Pickup Voltage Output Test	6G12
XIV-XXII.	Troubleshooting Chart (Propeller Synchrophaser) (Woodward Type 11)	6G17
XIV-XXIII.	Pressure Temperature Correction	6G22

SECTION XIIIA
ENVIRONMENTAL CONTROL SYSTEM
PA-31T2

Paragraph		Aerofiche Grid No.
13A-1.	Introduction	6A10
13A-2.	Description and Operation	6A10
13A-3.	Troubleshooting	6A10
13A-4.	Pressurization	6A10
13A-5.	Pressurization Control	6A13
13A-6.	Components Detailed Description	6A13
13A-7.	Cabin Depressurization (Dump) Procedure	6A16
13A-8.	Pressurization Check with Test Unit	6A16
13A-9.	Pressurization System Checkout Procedure	6A20
13A-10.	Safety Precautions	6A20
13A-11.	Ground Check	6A22
13A-12.	Flight Operations	6A22
13A-13.	DELETED	
13A-14.	DELETED	
13A-15.	Outflow and/or Safety Valve Removal	6A24
13A-16.	Outflow and/or Safety Valve Installation	6A24
13A-17.	Outflow and Safety Valve Cleaning	6A24
13A-18.	Removal of Controller	6B1
13A-19.	Installation of Controller	6B1
13A-20.	Controller Filter Replacement	6B1
13A-20a.	Door Seal System	6B1
13A-20b.	Description of Door Seal System	6B1
13A-21.	Environmental Control Unit	6B1
13A-22.	Troubleshooting	6B1
13A-23.	Component Detailed Description	6B10
13A-24.	Removal of Pressure Regulator and Shutoff Valve	6B10
13A-25.	Installation of Pressure Regulator and Shutoff Valve	6B12
13A-26.	Removal of Bleed Air Supply Overpressure Switch	6B12
13A-27.	Installation of Bleed Air Supply Overpressure Switch	6B12
13A-28.	Removal of Compressor Discharge Overtemperature Sensing Switch	6B12
13A-29.	Installation of Compressor Discharge Overtemperature Sensing Switch	6B12
13A-30.	Removal of Water Separator	6B13
13A-31.	Cleaning, Inspection and Repairs of Water Separators	6B13
13A-32.	Installation of Water Separator	6B13
13A-33.	Removal of Ground Cooling Fan	6B13
13A-34.	Installation of Ground Cooling Fan	6B13
13A-35.	Cooling Turbine	6B13
13A-36.	Cooling Turbine Check	6B14
13A-37.	Heating and Cooling	6B14
13A-38.	Cabin Temperature Control System	6B14
13A-39.	Description of Operation	6B14

Paragraph		Aerofiche Grid No.
13A-40.	Troubleshooting	6B14
13A-41.	Component Detailed Descriptions and Locations	6B14
13A-42.	Removal of Hot Air Bypass Valve	6B15
13A-43.	Installation of Hot Air Bypass Valve	6B15
13A-44.	Removal of Duct Temperature Sensor	6B15
13A-45.	Installation of Duct Temperature Sensor	6B15
13A-46.	Removal of Cabin Temperature Sensor and Controller	6B15
13A-47.	Installation of Cabin Temperature Sensor and Controller	6B15
13A-48.	Removal of Recirculation Blowers	6B15
13A-49.	Installation of Recirculation Blowers	6B15
13A-50.	ECS Automatic Temperature Control Troubleshooting	6B17

SECTION XIIIA
ENVIRONMENTAL CONTROL SYSTEM
PA-31T2

13A-1. INTRODUCTION. This section provides instructions for remedying difficulties which may arise in the operation of the environmental control system. The instructions are organized so that the mechanic can refer to: Principles of Operation, for a basic understanding of the systems; for a methodical approach in locating the difficulty; Corrective Maintenance, for the removal, repair and installation of components; and Adjustments and Tests, for the operation of the repaired system.

13A-2. DESCRIPTION OF OPERATION. The environmental control system for this aircraft consists of several units working together to furnish a means of pressurization, heating, cooling and dehumidification.

Bleed air from both engines is the prime source of energy to operate the environmental control unit (ECU). This bleed air system consists of two parts: the ECU bleed air supply and the pneumatic air supply for deicer boots and gyros. Description of each part follows:

ECU Bleed Air Supply System: The bleed air from each engine is supplied to the ECU through the bleed air shutoff valve and a shrouded duct arrangement. These tubes join just aft of the main spar where check valves are installed. This line then joins the pressure regulator valve and bypass control valve ahead of the forward pressure bulkhead. The pressure regulator and shutoff valve controls the pressure and flow of bleed air into the ECU located in the right hand equipment compartment just forward of fuselage station 57 pressure bulkhead. The bypass valve supplies bleed air to the mixing valve during single engine operation. The regulator valve is closed during single engine operation. Reference to Paragraph 13A-21 titled Heating and Cooling will give a more detailed description of the various components which make up the heating and cooling portion of the overall system.

Pneumatic Air Supply System: Bleed air is also used to operate the cabin pressure control system, inflatable cabin door seal, surface deicer boots and pressure gyro system. This bleed air is taken off the engine bleed air ducting at two places on the right side of the fuselage just aft of the main spar and are shrouded in HI temperature silicone hoses. The left and right air taps join at a rolling ball check valve. Air is then directed into a heat exchanger. A water separator collects water condensed in the system and dumps it overboard. Reference to Paragraph 13A-4 titled Pressurization will cover that portion of this system in more detailed. Reference to Section XIV will cover the Deicer System and Section X will cover the Pressure Gyro System.

13A-3. TROUBLESHOOTING. Probable troubles peculiar to the pressurization system components covered in this section are listed in Table XIIIA-I, along with their probable causes and suggested remedies. After the trouble has been corrected, check the entire system for security and operation of its components.

13A-4. PRESSURIZATION. Pressurization air for the cabin originates from the engine bleed air port on each engine. This bleed air is controlled by a solenoid shutoff valve operated by an ON-OFF switch on the overhead engine switch panel. The bleed air is routed through shrouded annular ducts and check valves up to the inlet of the ECU.

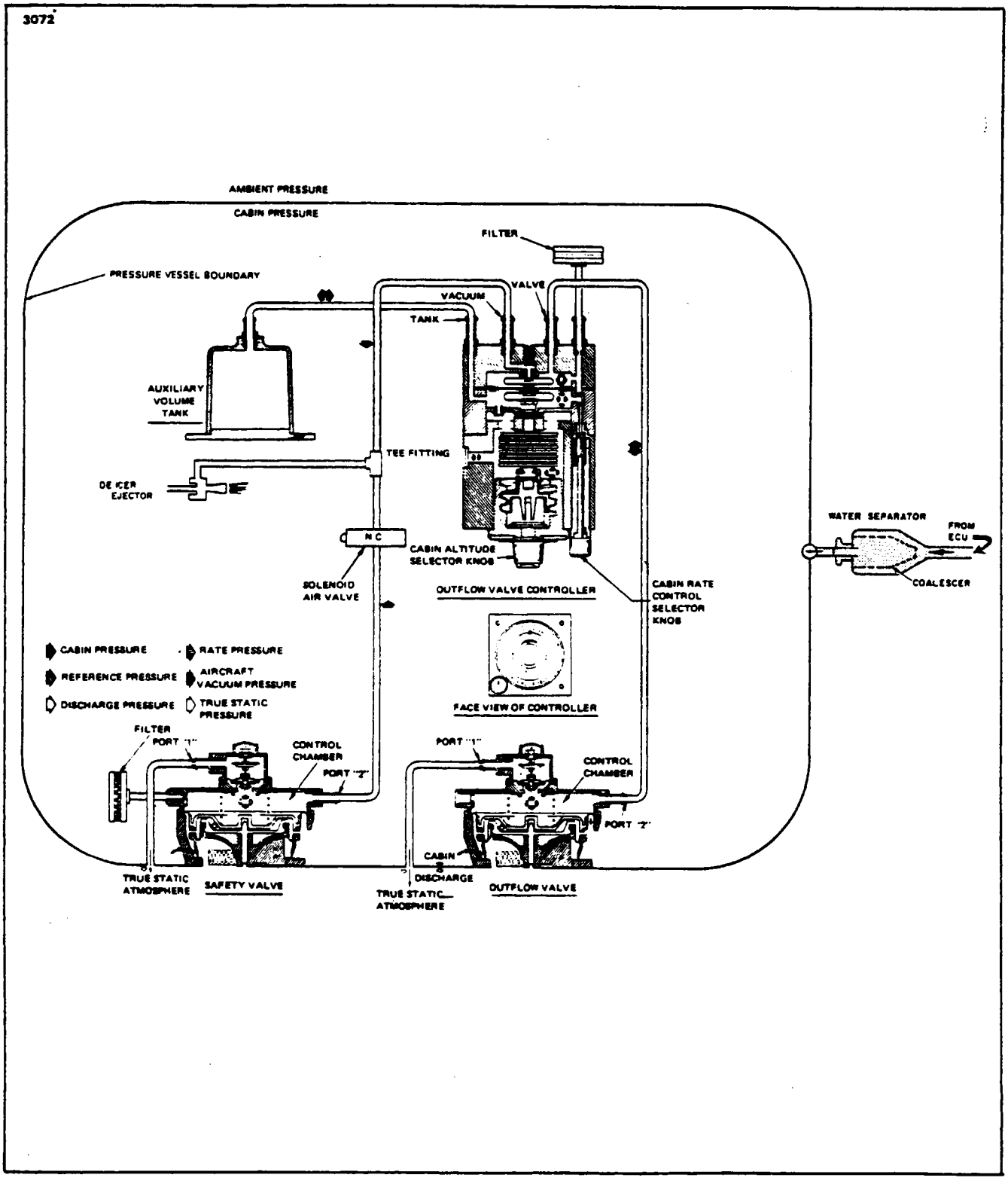

Figure 13A-1. Cabin Pressure Control System Schematic

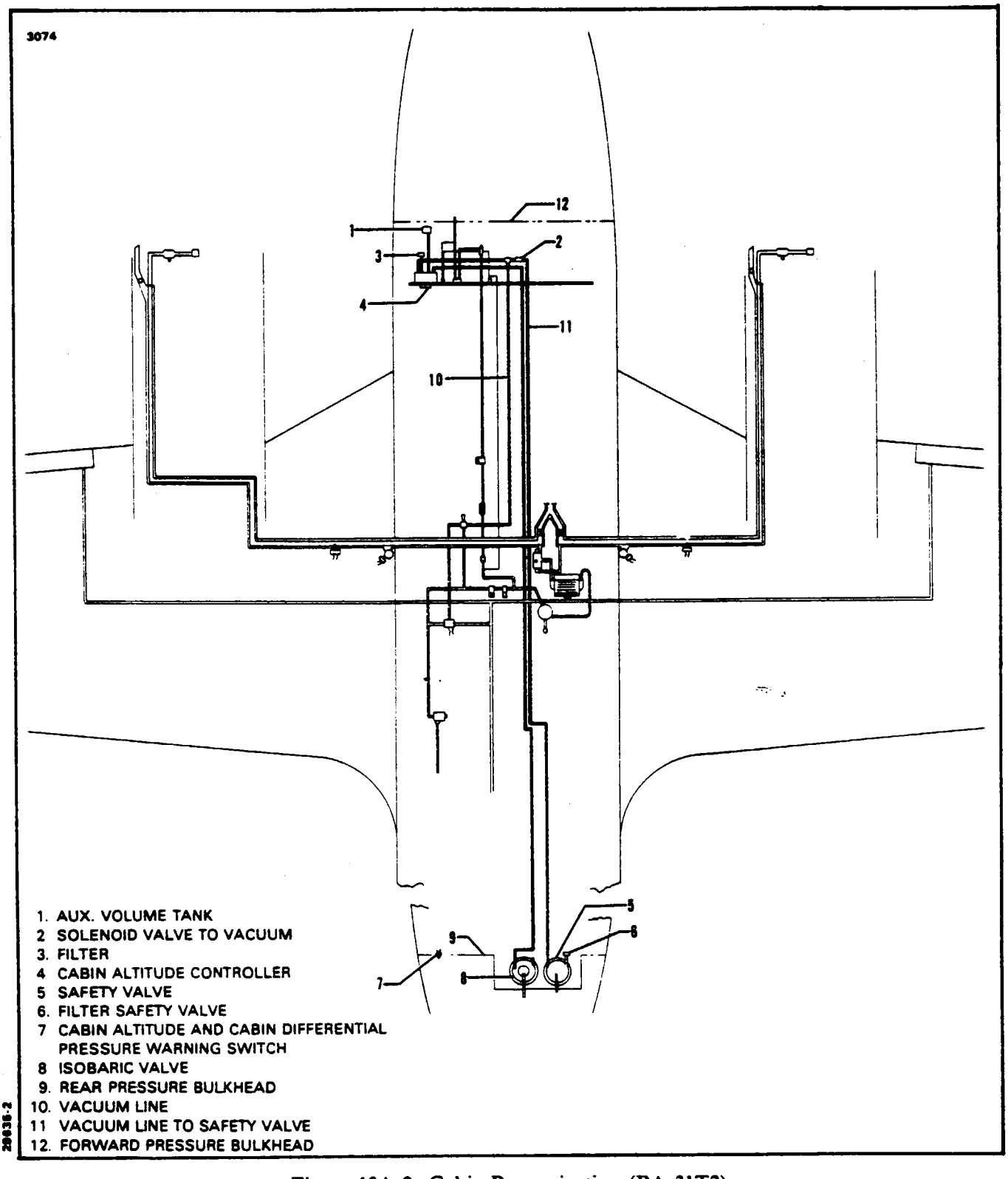

Figure 13A-2. Cabin Pressurization (PA-31T2)

13A-5. PRESSURIZATION CONTROL. The cabin pressure control system (refer to Figure 13A-1) consists of the cabin outflow valve, cabin safety valve, cabin pressure controller, auxiliary volume tank, filter, vacuum solenoid relief valve, cabin pressure test/dump switch, cabin differential pressure switch, cabin absolute pressure switches and plumbing and wiring as required. Each of the above items will be given a detailed description of operation following this general description of the cabin pressure control system.

The cabin safety valve is held open on the ground with the engines operating by a vacuum applied to the control chamber of the safety valve. The deicer ejector provides a vacuum of approximately 4 inches mercury referenced to ambient. Engine bleed air is supplied to the ejector to produce the required vacuum. This vacuum holds the safety valve open while on the ground through the action of the landing gear squat switch, which energizes the vacuum relief solenoid valve to open it. The cabin pressure control switch located on the lower left instrument panel also controls the vacuum relief solenoid valve. This switch, when placed in the DUMP position, energizes the vacuum solenoid and opens the safety valve. The switch has three positions, DUMP, CABIN PRESS., and TEST. The test position bypasses the landing gear squat switch, thus permitting the cabin to be pressurized on the ground for test purposes only. The normal position is CABIN PRESS. which allows the system to be pressurized after takeoff.

The cabin pressure controller is mounted on the lower left instrument panel, and the auxiliary volume tank and filter are located behind the instrument panel. The volume tank provides additional volume for the rate pressure chamber in the controller, thus providing greater accuracy of the cabin rate-of-change control. The air filter eliminates entry of tobacco tar and dust particles greater than .3 microns into the pneumatic control elements of the controller.

The cabin outflow and safety valves, cabin absolute pressure switches and cabin differential pressure switch are mounted on the aft pressure bulkhead.

13A-6. COMPONENTS DETAILED DESCRIPTION.

a. Cabin Outflow Valve: (Refer to Figure 13A-3.)
The outflow valve consists of two sections, a head section and a base section. The head section contains port "2" (controller connection) and a plugged cabin air port. Mounted on the head is the differential control, which contains port "1" (true static atmosphere connection with orifice). The base assembly encloses a poppet outflow valve which seats on a surface of the base assembly when in the closed position.

b. Cabin Safety Valve: (Refer to Figure 13A-3.)
The safety valve consists of two sections, a head section and a base section. The head section contains port "2" depressurization connection and a cabin air filter with orifice. Mounted on the head is a differential control which contains port "1" (true static atmosphere connection with orifice). The base assembly encloses a poppet outflow valve which seats on a surface of the base assembly when in the closed position.

c. Cabin Pressure Controller: (Refer to Figure 13A-4.)
The body of the controller is composed of three elements. The lower element forms a chamber which is open to cabin pressure and houses the absolute bellows. It also is the face of the controller and has the cabin altitude selector knob and the cabin rate control knob. The middle element, when assembled to the lower element, completes the cabin pressure chamber and seals the cabin pressure chamber from the rest of the controller with a sealing diaphragn. The opposite side of the middle element forms a rate pressure chamber which houses the rate spring. The upper element, when assembled to the rate diaphragn and other two elements, forms a reference pressure metering valve and metering valve follower spring. This element also contains the various air connections for installation of the controller into the cabin pressure control system.

d. Auxiliary Volume Tank:
This is a small sealed chamber located close to the controller and when connected to the controller, provides additional volume to the rate pressure chamber in the controller, thus providing greater accuracy of the cabin rate-of-control.

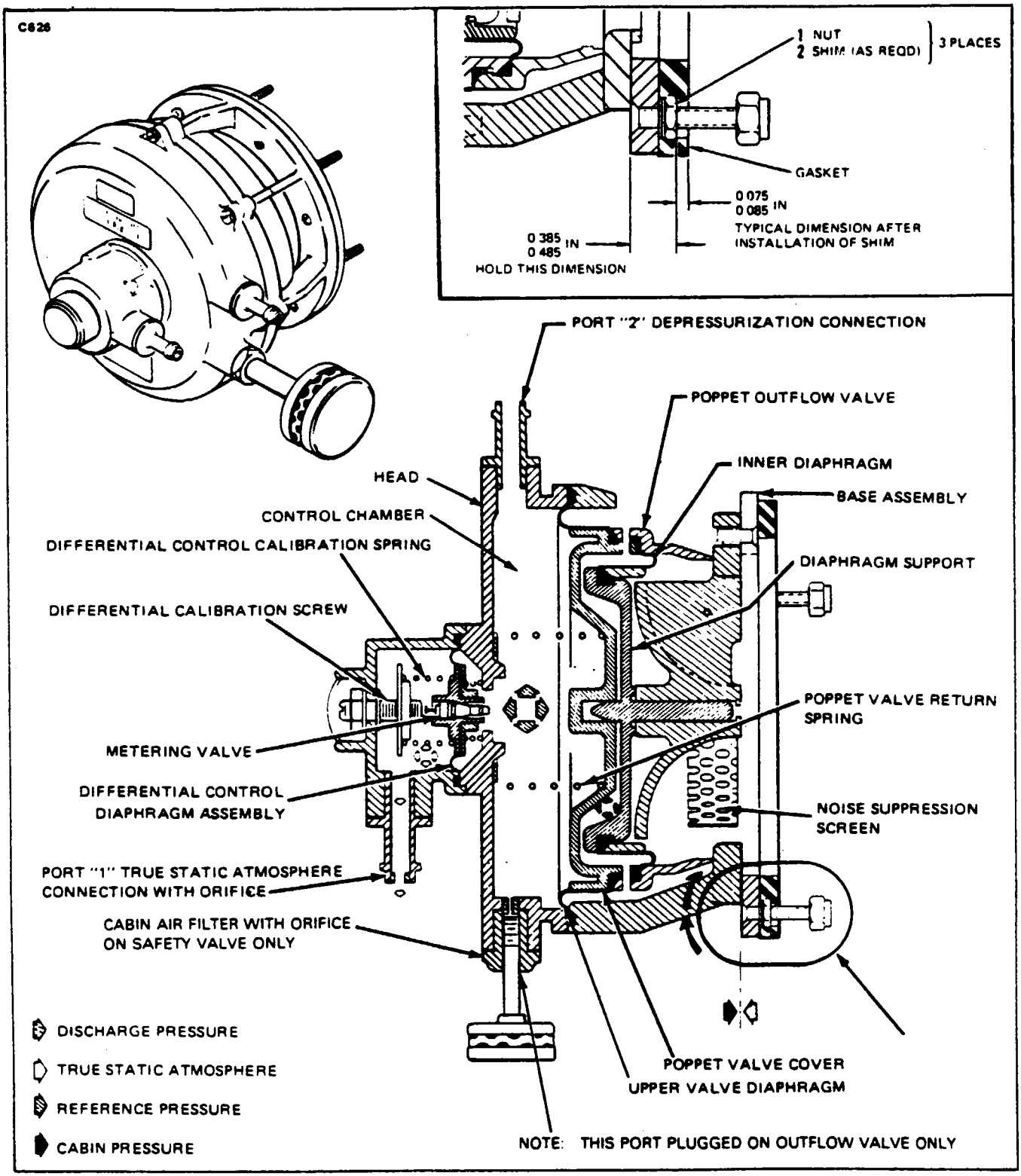

Figure 13A-3. Safety and Outflow Valves

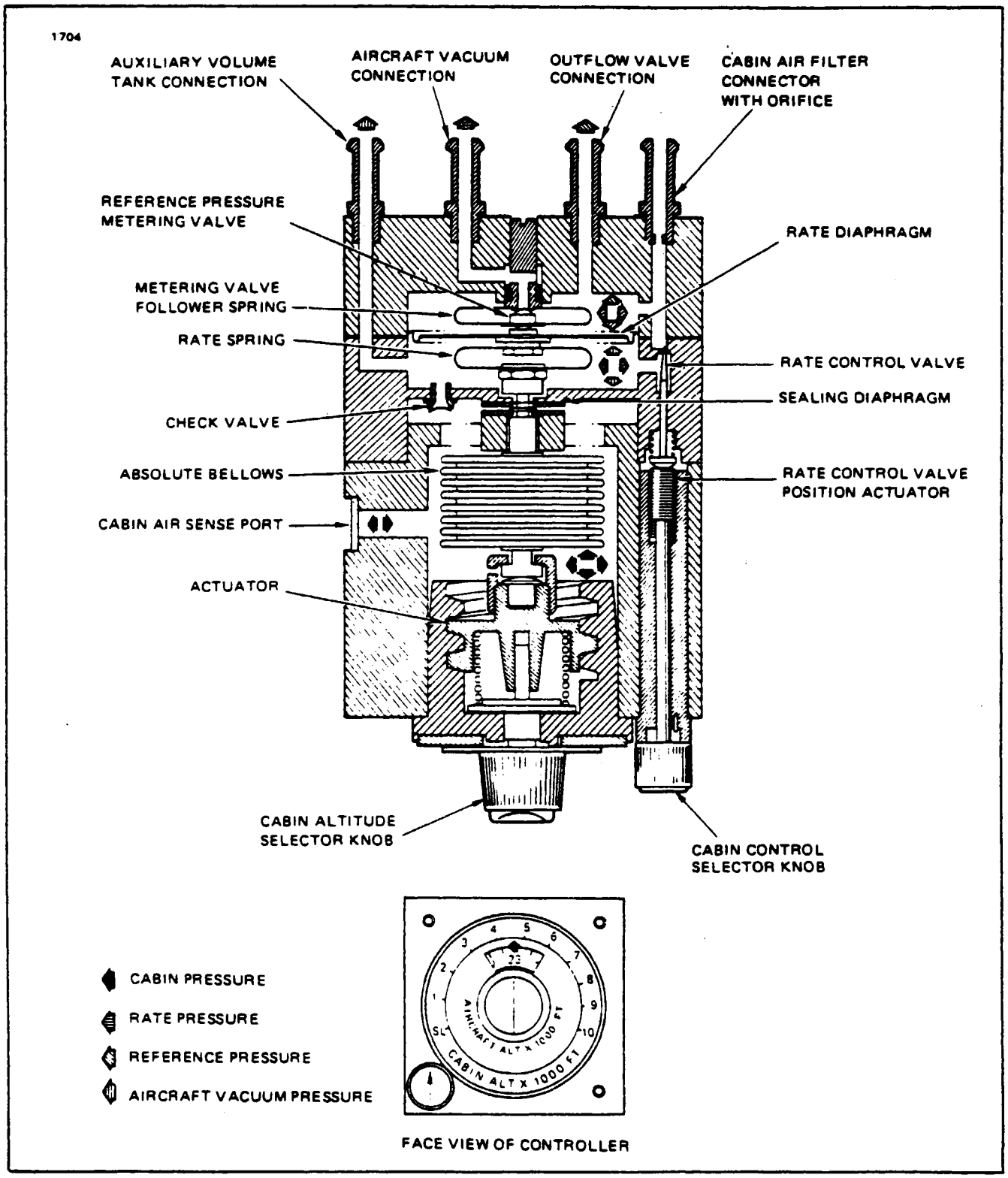

Figure 13A-4. Cabin Air Pressure Outflow Valve Controller

e. Air Filter:
The filter element is a cylindrical plug of treated paper fabric material, completely enclosed in a thin aluminum case with perforations located around its circumference. The filter effectively eliminates the entry of tobacco tar and dust particles greater than .3 micron in diameter into the pneumatic control elements of the outflow valve controller.

f. Vacuum Relief Solenoid Valve:
This valve is normally closed and located between the vacuum ejector and the control line from the cabin pressure controller to the safety valve. When energized, the vacuum provided by the ejector is applied to the diaphragm of the safety valve, holding it open. The vacuum relief solenoid valve is open under either of the following conditions:
1. On the ground with the landing gear squat switch energized.
2. In flight whenever the cabin dump switch is in the DUMP position.

g. Cabin Pressure Switches:
1. The Cabin Differential Pressure Switch provides a warning to the pilot by activating the "CABIN PRESS." annunciator light when the cabin differential pressure exceeds that specified in Table XIIIA-I.
2. Cabin absolute switch provides a warning to the pilot by lighting the "Cabin Pressure" caution light on the pilot's annunciator panel if the cabin altitude exceeds 11,300 feet. This switch is located on the aft pressure bulkhead.

13A-7. CABIN DEPRESSURIZATION (DUMP) PROCEDURE. The cabin pressure may need to be dumped for a number of reasons and, in most cases, it is recommended that oxygen be turned ON and masks donned before pressure is dumped. However, if "fire" is experienced or suspected, the oxygen should be turned ON without the masks activated, until the cabin is depressurized. (Refer to "Emergency Oxygen System" for the appropriate procedure.)

Depressurization can be accomplished in two ways. If pressure needs to be dumped in a hurry, the Cabin Pressure control (Test/Dump switch) located on the cabin pressure control panel, should be switched to DUMP. If urgency is not required, it is recommended that the emergency gear extender cover be lifted slowly until pressure is unloaded, which will prevent a rapid discharge of pressure.

If the Cabin Pressure control (Test/Dump switch) has been moved to DUMP, monitor cabin altitude after activation. Should cabin pressure not dump, lift the emergency gear extender cover as well. Pull the ECS circuit breakers if necessary.

For fresh air ventilation move the Cabin Air control to OUTSIDE.

13A-8. PRESSURIZATION CHECK WITH TEST UNIT. (Refer to Figure 13A-6.) The following pressurization test procedure is used to determine if the aircraft fuselage has an acceptable leaking rate. A pressurization test unit as shown in referenced figures will be required to perform the pressurization test.

a. Aircraft Preparation:
1. Remove the access panel on the right side of the nose section to permit access to the pressure bulkhead at fuselage station 57.00.
2. Remove the access panels on the right and left side of the fuselage tail section at station 346.00.
3. Remove the trim panel at fuselage station 274.00 in front of the outflow and safety valves. Remove the cotter pin and cap the ambient sense line from the outflow and safety valves.
4. Place the cabin air control in the pressurized position.
5. Position all circuit breakers to the OFF position, except the cabin pressure control, door seal and annunciator/warning light circuits which should be in the ON position.
6. Remove access plate and install an AN840-4D test fitting in the door seal solenoid valve at fuselage station 203.00.

NOTE

If the airplane is not on jacks, disconnect the electrical power to the vacuum relief solenoid valve.

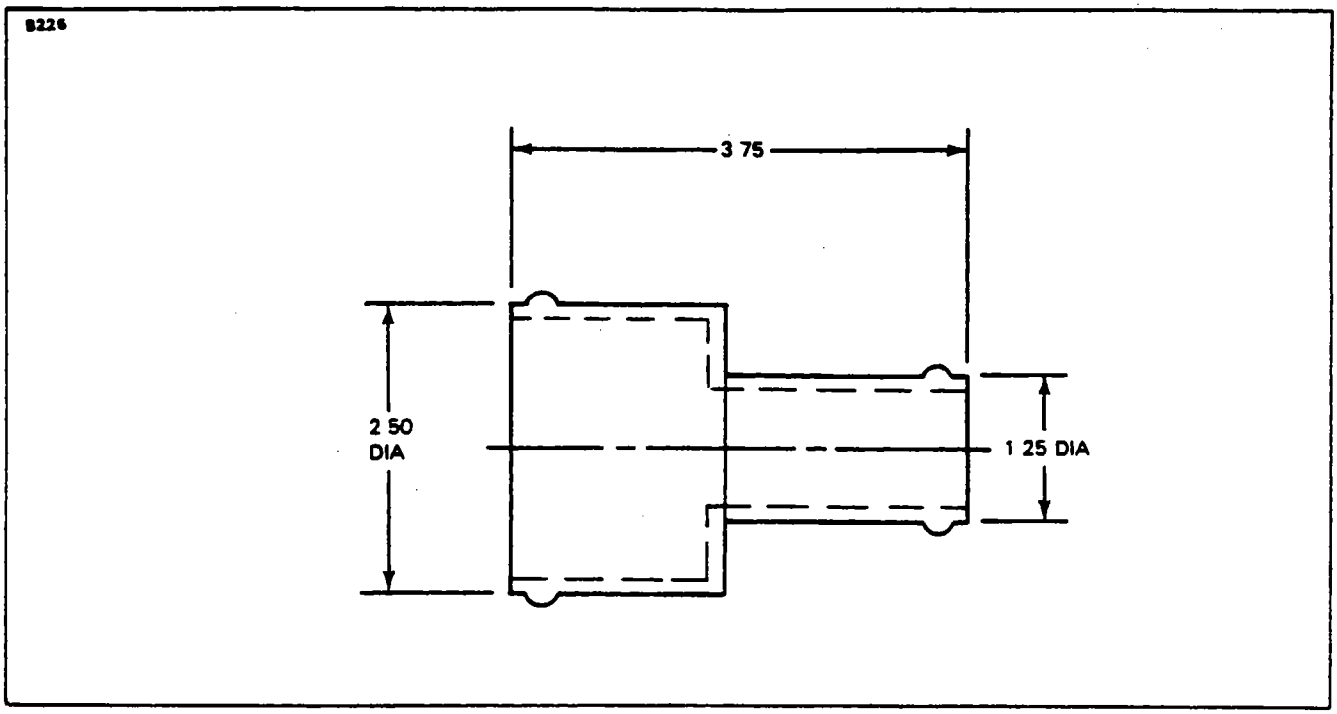

Figure 13A-5. Fabricated Reducer Pressure Test Adapter

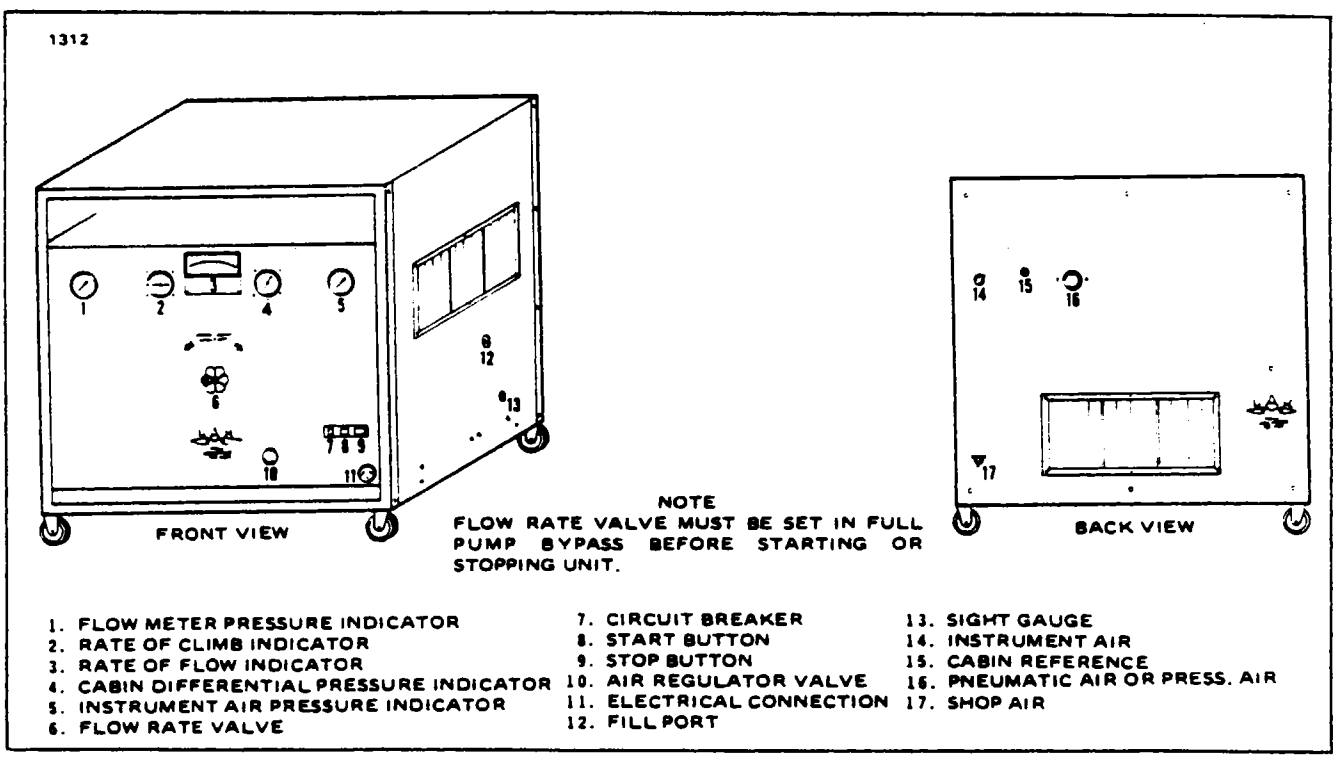

Figure 13A-6. Cabin Pressure Test Unit (Typical)

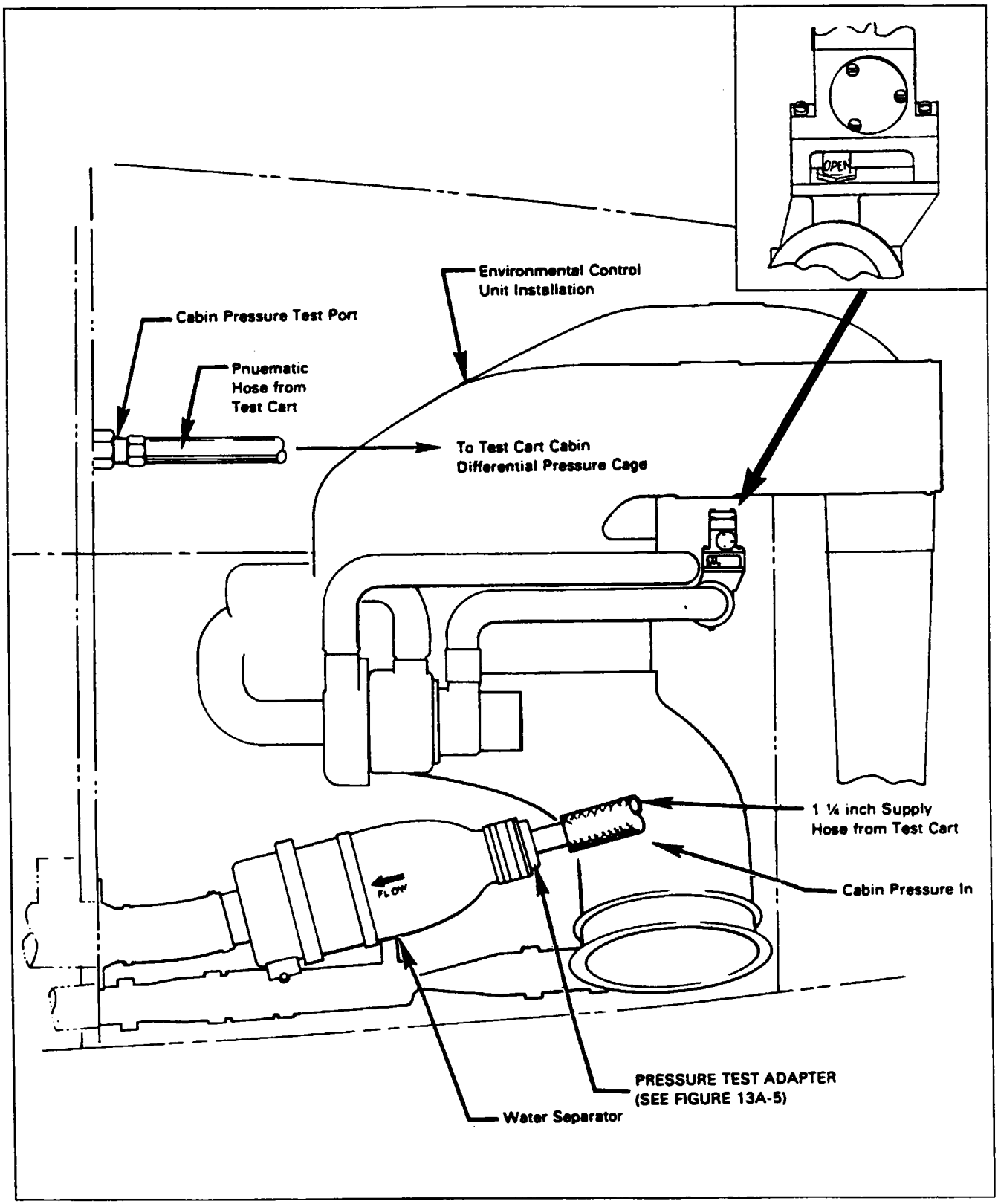

Figure 13A-7. Pressurization Test Hookup

b. Test Unit Hookup: (Refer to Figure 13A-7.)

1. Connect the pneumatic line from the test unit titled "Cabin Reference" to the cabin pressure test fitting. Remove the water separator inlet duct and connect the pressurized air supply hose from the test unit using the reducer shown in Figure 13A-5.

NOTE

Insure all connections are made in a manner that prevents leakage.

2. Uncap the door seal test fitting underneath the fuselage near the cabin door to a pneumatic hose and connect it to the door seal inflation hose from the test unit.

3. Turn on the aircraft electrical power to activate the warning light system.

4. Close the cabin door and inflate the door seal.

c. Test Unit Operation:

1. Turn on the aircraft electrical power to activate the warning light system.

2. Set the pneumatic system pressure on the test unit with the regulator control knob so that 18 psig is shown on the test unit door seal pressure gauge.

3. Connect the test unit to the proper voltage source. Turn the flow rate valve knob to the full bypass position, thus allowing the machine to be turned ON.

NOTE

If a test unit other than the type covered in these instructions is used, activate in accordance with the manufacturer's instructions.

4. Turn the flow control valve for cabin pressurization to maintain a 2000 foot per minute rate of descent on the rate change indicator. Allow the cabin differential pressure to rise to 5.0 psi on the cabin differential pressure gague (C.D.P.).

NOTE

If no personnel are inside the pressurized cabin, the rate of change can be as high as 6000 feet per minute.

5. When 5.0 psi is indicated on the C.D.P. gauge, rotate the flow control valve and decrease the air flow rate until the "cabin rate of climb" gauge indicates zero.

6. Maintain 5.0 psi cabin differential pressure and zero rate of change.

7. Observe the leak rate on the test unit flow meter. The actual leakage rate in CFM should not exceed 55.0 CFM. Refer to Chapter XIII for PA-31T and PA-31T1.

8. If the allowable leakage rate is exceeded, locate the leak using soap bubbles, mechanics stethoscope or other appropriate method. Repair the leak and repressurize in accordance with the above procedure.

CAUTION

Exercise caution during depressurization to avoid damage to the aircraft, test unit or personnel. The test unit cannot be turned off while there is a pressure differential in the cabin for purpose of rapid depressurization, however if the machine is unplugged, the latter results will occur, causing serious discomfort to anyone that may be within the cabin.

9. After completion of the leak rate test, proceed to check the annunciator/warning light system as follows:

(a) Ascertain that the ambient sense line from the outflow and safety valves are capped.

(b) Slowly increase the cabin pressure to 5.75 psid keeping an eye on the cabin differential pressure gauge.

NOTE

Beware of irregularities in the differential pressure gauge. If the gauge is felt to be inaccurate, known good altimeter or pressure gauge should be used.

(c) Note the activation of the annunciator warning light as specified in Table XIIIA-I.

CAUTION

Do not exceed 5.8 psid. After completion of the above tests, assure that the caps are removed from the ambient sense lines to the outflow and safety valves and that the cotter pins are replaced.

10. Test the bleed air and cabin pressurization system, the safety and outflow valves prior to any engine runup test in accordance with the following instructions:

(a) Safety valve check - Ascertain that the ambient sense line for the safety valve is open. Close the outflow valve ambient sense line.

(b) With the cabin pressure stabilized, slowly increase cabin pressure to a 5.5 ± .1 psi reading on the "cabin differential pressure" gauge to permit opening of the safety valve. The test unit "cabin rate of climb" indicator will indicate a climb when the safety valve opens.

(c) Outflow valve check - Close the ambient sense line for the safety valve and open the ambient sense line for the outflow valve. Repeat the opening test, Step b, for the outflow valve.

11. After completion of the safety and outflow valve opening checks, rotate the flow control to depressurize the cabin and bring the pressure to ambient by observing the "cabin differential pressure" gauge. Open the ambient sense lines.

12. Shut down the test unit and turn off the shop air to the unit. Bleed off the air pressure in the door seal and open the cabin door.

13. De-energize the airplane electrical system and disconnect the test unit pneumatic lines from the airplane. Reconnect the electrical lines to vacuum relief solenoid if disconnected. Reconnect all airplane pneumatic lines.

14. Replace the access and trim panels removed to accomplish these tests.

13A-9. PRESSURIZATION SYSTEM CHECKOUT PROCEDURE. The following procedure has been established to systematically check the function of each element of the cabin pressure control system, so that any single or combination of component malfunctions may be safely detected and corrected. Should a malfunction be detected, it is imperative that it be corrected before continuing to the next step.

13A-10. SAFETY PRECAUTIONS. In case of uncontrolled pressurization, the pilot should stop pressurization or depressurize the aircraft in order of priority as follows:

a. Move the cabin pressure mode switch to the "dump" position. (After depressurization only.)

b. Pull the circuit breaker to deactivate the inflation of the cabin door seal.

c. Close the right and left engine bleed air valves by positioning both bleed air switches to the OFF position.

d. Lift the emergency gear extender cover.

TABLE XIIIA-I. CABIN DIFFERENTIAL PRESSURE SWITCH SPECIFICATIONS

SWITCH ACTUATION	PRESSURE SETTING TOLERANCES	ALTITUDE SETTING TOLERANCES
Closes	5.70 to 5.75 PSID	11,500 to 12,500 ft.
Opens	5.40 to 4.40 PSID	8,000 ft. min.
Reliable through the following temperatures: Ambient -65° F to +120° F Cabin +35° F to +120° F		

THIS SPACE INTENTIONALLY LEFT BLANK

13A-11. GROUND CHECK.

a. Select outside air source and the normal position of the dump switch prior to engine start up.
b. Set engine power levers to obtain 70% compressor speed.
c. Set cabin altitude selector above field elevation (500 feet).

NOTE

The safety valve should be wide open.

d. Select the test position on the dump switch.

NOTE

The safety valve must close in less than 12 seconds, which indicates a clear safety valve filter and operation of the test mode of the dump switch.

13A-12. FLIGHT OPERATIONS.

a. Select pressurized air source.
b. Select 5000 feet cabin altitude on the cabin altitude controller.
c. After takeoff, to check the function of the dump mode perform the following steps:
   1. Select the dump position on the dump switch.
   2. Establish a flight altitude of 4500 feet. Safety valve should be wide open.
d. To assume operation of cabin altitude control, rate operation, volume tank and tank line integrity perform the following steps:
   1. Select the normal position on the dump switch; the safety valve should be in the closed position.
   2. Select the 12 o'clock position on the rate knob.
   3. Slowly rotate the cabin altitude selector knob to 3,000 feet. The isobaric valve should fall toward its seat.

NOTE

At no time should the cabin rate of climb exceed - 2000 feet per minute.

   4. Select the sea level position on the cabin altitude selector knob and rotate the cabin rate control knob counterclockwise to its stop and note a cabin rate of climb between -50 and -300 feet per minute.
e. To assure the differential control perform the following steps:
   1. When the cabin altitude reaches sea level, climb to, but do not exceed, 14,000 feet; note the cabin altitude at approximately 1,000 feet and the pressure differential gauge at 5.5 psi.
   2. Install a small C-clamp on the isobaric valve ambient sense line and close off the soft rubber tube.

NOTE

The cabin altitude should not change more than 40 feet. This shows the capability of differential control of the safety valve.

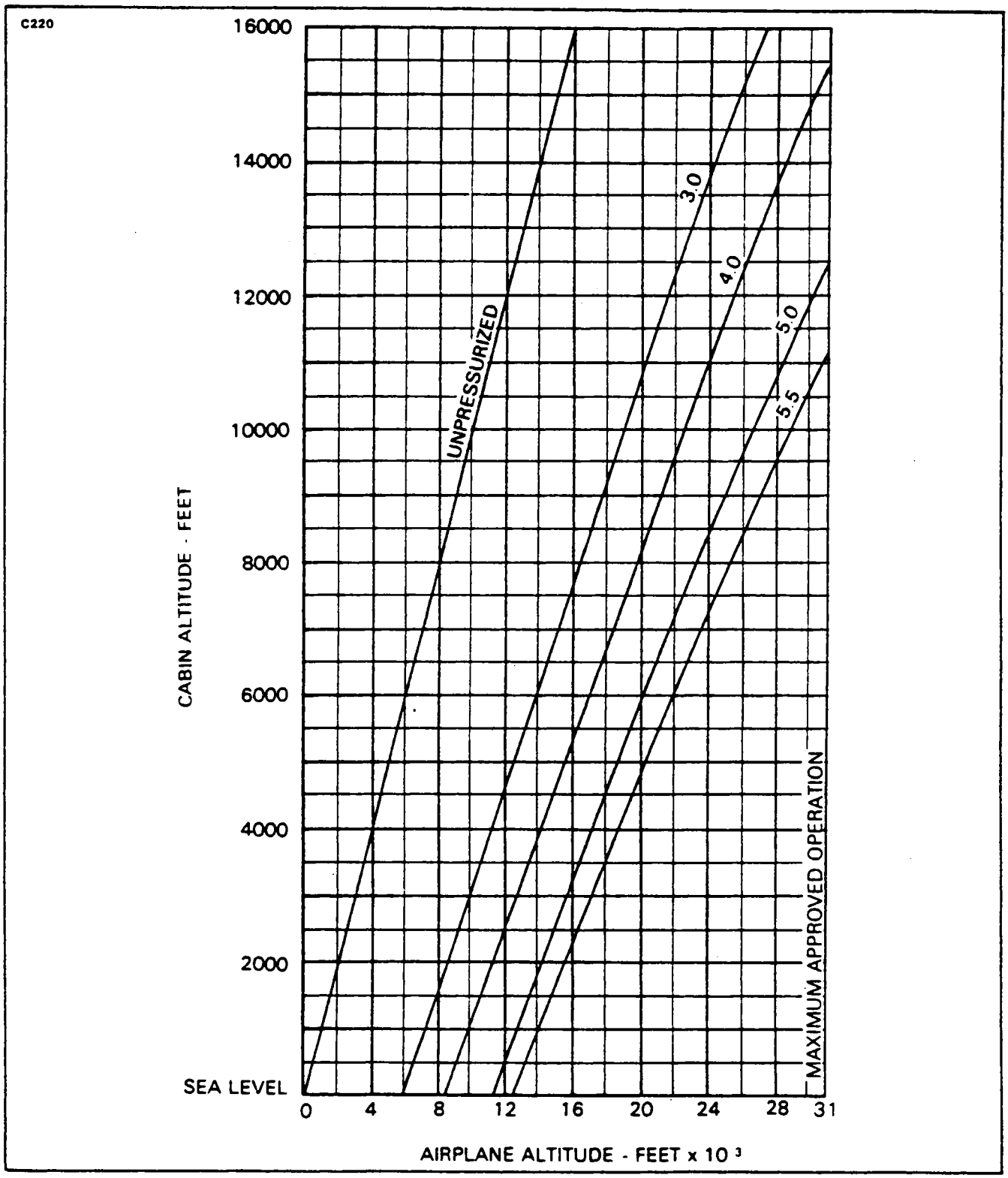

Figure 13A-8. Cabin Altitude Vs. Airplane Altitude

3. Remove the C-clamp from the isobaric valve ambient sense line.
4. Install the C-clamp on the safety valve ambient sense line and close off the rubber tube.

NOTE

The cabin altitude should not change more than 400 feet. This shows operation of the isobaric valve assembly.

5. Remove the C-clamp from the safety valve ambient sense line.

13A-13. DELETED.

13A-14. DELETED.

13A-15. OUTFLOW AND/OR SAFETY VALVE REMOVAL.

a. Remove the trim panel in front of the safety and outflow valve located in the rear pressure bulkhead.

b. Remove the access panel on the left side of the tail section just aft of the entrance door if the safety valve is being removed or remove the access panel on the right side if the outflow valve is being removed.

c. Disconnect the lines to the valve being removed.

d. Working through the tail section access hole, remove the three locknuts which secure the valve to be removed.

e. Remove the valve from the pressure bulkhead.

13A-16. OUTFLOW AND/OR SAFETY VALVE INSTALLATION.

a. Position the valve being installed onto the shelf in the rear pressure bulkhead.

b. When reinstalling safety and/or outflow valve, gasket dimension shown in Figure 13A-3 must be met to insure sealing requirements.

1. Remove nuts, using a deep socket and remove sufficient shims to meet dimensional requirements. A minimum of one shim is required each place for installation of nut.

2. Install nuts and tighten.

c. Working through the tail section access opening install the three locknuts which hold the valve in place and tighten to metal contact and then backing off 1/4 turn.

d. Install the access plates removed from the tail section.

e. Connect the lines removed from the valve.

f. Install the trim panel in front of the valves after making sure acoustical material is in good condition.

13A-17. OUTFLOW AND SAFETY VALVE CLEANING. Routine maintenance of components of the cabin pressure control system is limited to the replacement of the filter in the cabin air pressure safety valve and cleaning of seats in the outflow and safety valves. Clean the seats of the outflow and safety valves thoroughly using Joy detergent or see placard on aft bulkhead.

NOTE

Replace safety valve filter; it may not be cleaned. Replace at least each 500 hours.

13A-18. REMOVAL OF CONTROLLER.

a. Disconnect the lines from the rear of the cabin altitude controller assembly. Cap the open parts of the lines and fittings to prevent dust from entering the system.

b. Remove the screws which secure the electro luminescent panel to the face of the instrument panel.

c. Remove the three screws which secure the selector to the instrument panel.

d. Remove the controller by lifting the assembly from the rear of the instrument panel.

13A-19. INSTALLATION OF CONTROLLER.

a. Position the controller into the instrument panel cutout from the forward side of the panel.

b. Secure the controller to the instrument panel with three screws.

c. Position the electro luminescent panel to the instrument panel and secure with screws previously removed.

d. Remove the protective caps from the lines and fittings of the selector and connect the lines to the fittings on the rear of the controller.

13A-20. CONTROLLER FILTER REPLACEMENT. There is a tobacco filter installed in the pressurization system. This is a disposable type filter which must be replaced at least every 500 hours of normal use. Refer to the Parts Catalog for part number of replacement filter. More frequent filter change and more frequent cleaning of the outflow and safety valve seats may be required depending on the amount of smoking in the cabin. Replace the controller filter as follows:

a. The filter is accessible from underneath the instrument panel.

b. Remove the filter from behind and discard.

c. Install the new filter in place.

13A-20a. DOOR SEAL SYSTEM.

13A-20b. DESCRIPTION OF DOOR SEAL SYSTEM. (Refer to Figure 13A-8a.) The door seal system receives its pressure from both engine bleed air ports. This bleed air leaves the engines at a temperature of 600° F and a pressure of 90 psi. The air is routed thru check valves and on to a heat exchanger which lowers the high bleed and temperature. As the air is cooled it is routed thru a water separator which removes any moisture from the air before it enters the pressure regulator. This regulator decreases the system pressure from 90 psi down to 18 psi +1 -3 psi, for door seal and deicer operation. (Refer to Section XIV, for Deicer System.) This pressure regulator is backed up by a pressure relief valve which cracks open at 21 psi and becomes full open at 26 psi should the regulator fail to open. The regulated air is then routed to a three way valve which directs the air to the door seal or dumps the pressure overboard when pressurization is not desired.

13A-21. ENVIRONMENTAL CONTROL UNIT. This system is operated by engine bleed air which is controlled by a pressure regulator and flow limiting venturi along with various components which make up the environmental control system. Refer to the following paragraphs for component detailed description and removal and installation of each component making up the environmental control system.

13A-22. TROUBLESHOOTING. Probable troubles peculiar to the environmental control system components covered in this chapter are listed in Table XIIIA-II, along with their probable causes and suggested remedies after the trouble has been corrected, check the entire system for security and operation of its components.

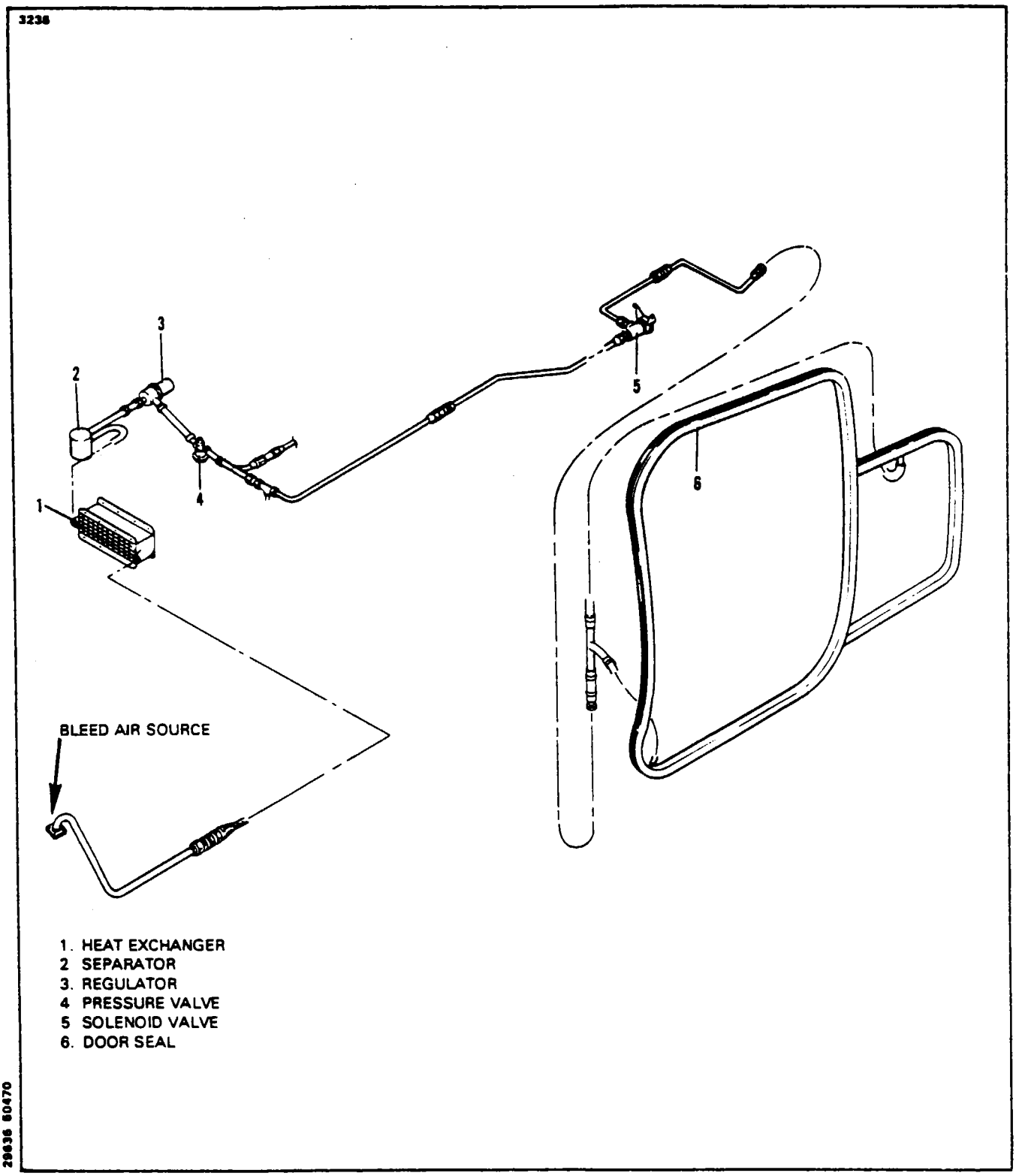

Figure 13A-8a. Door Seal System

TABLE XIIIA-IA. TROUBLESHOOTING (PA-31T2) (PRESSURIZATION SYSTEM)

Trouble	Cause	Remedy
Cabin will not pressurize.	Blocked safety valve cabin air filter or orifice.	Replace filter and check orifice.
	Blocked controller cabin air filter with orifice.	Clean filter and check orifice on controller.
	Internal malfunction in the isobaric valve.	Remove and replace.
	Internal malfunction in the safety valve.	Remove and replace.
	Internal malfunction in the controller.	Remove and replace controller.
	Defective landing gear safety switch.	Remove and replace switch.
	Defective dump/test switch.	Replace switch.
	No pressure to door seal.	Check and repair door seal or door seal valve.
	Excessive leakage in pressurization ducts.	Locate leak and tighten connections.
	Excessive cabin leakage.	Locate and repair leak.
	Solenoid valve malfunctions in the open position.	Replace valve.
	Valve on outside air control box won't close.	Adjust or lubricate valve or control linkage.
	Malfunction of ECS control switch.	Repair or replace switch.
	Malfunction of ECU pressure regulator and shut off valve.	Repair or replace valve.

TABLE XIIIA-IA. TROUBLESHOOTING (PA-31T2) (PRESSURIZATION SYSTEM) (cont.)

Trouble	Cause	Remedy
Cabin pressurizes to full positive differential pressure after takeoff.	Vacuum tube not connected to controller.	Connect vacuum tube.
	Malfunction in aircraft vacuum supply.	Check aircraft vacuum supply.
	Rupture in volume tank.	Replace tank.
	Internal malfunction in the isobaric valve.	Remove and replace valve.
	Internal malfunction in the controller.	Remove and replace controller.
Cabin altitude decreases below selected altitude.	Low aircraft vacuum supply.	Check aircraft vacuum supply.
	Minor leak in tube between controller and volume tank or in volume tank.	Remove and replace tube or volume tank.
	Minor leak in tube between controller and isobaric valve or in isobaric valve.	Remove and replace tube or isobaric valve.
	Minor leak in the controller.	Remove and replace controller.
Minimum rates unbalanced. Down rate faster than up rate.	Minor leak in tube between controller and volume tank or in volume tank.	Remove and replace tube or volume tank.
	Minor leak in the controller.	Remove and replace controller.

TABLE XIIIA-IA. TROUBLESHOOTING (PA-31T2) (PRESSURIZATION SYSTEM) (cont.)

Trouble	Cause	Remedy
Pressurized operation before takeoff and after landing.	Solenoid valve malfunction in the closed position.	Replace valve.
	Landing gear switch or test/dump switch malfunction in the open position.	Remove and replace switch.
	Broken wiring to the vacuum relief solenoid.	Repair wiring.
	Loose or damaged pneumatic tube between solenoid valve and safety valve.	Check tube connections or replace damaged tube.
	Internal malfunction in the safety valve.	Remove and replace valve.
Cabin exceeds full positive differential calibrated setting.	True static atmosphere tube blocked or not connected on isobaric valve and safety valve.	Securely connect or remove blockage from the true static atmosphere tube on isobaric valve and safety valve.
	Loose or damaged pneumatic tubing from port "1" of safety and isobaric valve to atmosphere.	Repair or replace tubing.
Cabin climbs and descends at a fixed rate regardless of rate selection.	Internal malfunction in controller.	Remove and replace controller.
Cabin rate exceeds selected rate valve during aircraft climb to cruise altitude.	Malfunction in controller.	Remove and replace controller.
	Defective cabin rate of climb indicator.	Remove and replace indicator.

TABLE XIIIA-IA. TROUBLESHOOTING (PA-31T2) (PRESSURIZATION SYSTEM) (cont.)

Trouble	Cause	Remedy
Cabin pressure rapidly increases or decreases with reselection of cabin altitude.	Malfunction in controller.	Remove and replace controller.
Cabin altitude exceeds selected value.	Loss of airflow into cabin.	Repair bleed air supply or ECU system.
	Internal malfunction in isobaric valve.	Remove and replace valve.
	Internal malfunction in safety valve.	Remove and replace valve.
	Internal malfunction in controller.	Remove and replace controller.
	Excessive cabin leak rate.	Seal leaks.
Cabin pressure will not maintain control setting.	Valve partially open.	Close valve; adjust valve control cables.
	Defective isobaric control valve.	Remove and replace valve.
	Defective safety valve.	Remove and replace valve.
	Defective pressurized air dump valve.	Remove or repair valve.
	Defective cabin altitude controller.	Remove and replace cabin altitude controller.
	Pressurization duct leakage.	Locate leak and tighten connection.
	Cabin leakage.	Locate and repair leak.

TABLE XIIIA-IA. TROUBLESHOOTING (PA-31T2) (PRESSURIZATION SYSTEM) (cont.)

Trouble	Cause	Remedy
Cabin pressure will not maintain control setting. (cont)	Defective cabin altitude pressure gauge.	Remove and replace gauge.
	Foreign matter on isobaric control valve or safety valve seats.	Clean valve seats.
	Leak in isobaric valve control line.	Locate leak and tighten connection.
Cabin pressure excessively high.	Isobaric static line clogged.	Clean static line.
	Defective cabin over pressure switch.	Remove and replace switch.
	Defective cabin altitude pressure gauge.	Remove and replace gauge.
	Safety valve static vent clogged.	Clean vent line.
	Defective safety valve.	Remove and replace valve.
Cabin door unsafe light will not go out.	Latching relay sticking in the open position.	Lubricate the mechanical parts (sparingly) with "Glide Air" or equivalent.
	Switch or switches in door frame out of adjustment.	Adjust.
	Defective pressure switch.	Replace switch.
	Short to ground.	Check wiring and repair.

TABLE XIIIA-IA. TROUBLESHOOTING (PA-31T2) (PRESSURIZATION SYSTEM) (cont.)

Trouble	Cause	Remedy
Cabin door unsafe light will not come on.	Circuit breaker open.	Reset circuit breaker.
	Broken wire or loose connection.	Check wiring and repair.
No pressure to door seal.	Leak in door seal pressure system.	Check and repair door seal pressure system.

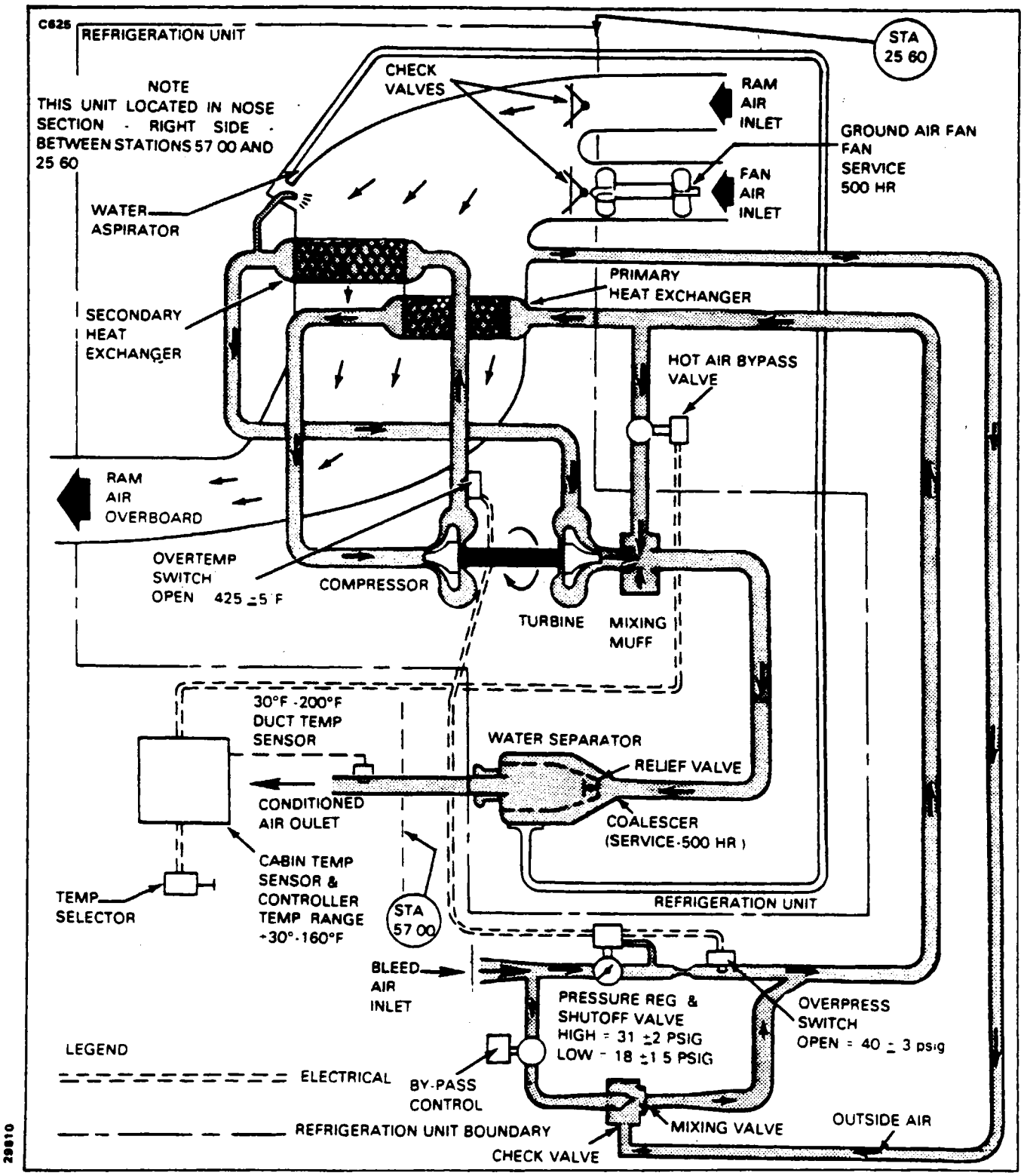

Figure 13A-9. Environmental Control System

13A-23. COMPONENT DETAILED DESCRIPTIONS. This system is operated by engine bleed air which is controlled by a pressure regulator and flow limiting venturi along with various components which make up the environmental control system. The following is a description of these various components: (Refer to Figures 13A-9 and 13A-10.)

a. Pressure Regulating and Shutoff Valve.

The pressure regulating and shutoff valve is installed in the bleed air line located upstream of the refrigeration unit. This is a solenoid operated valve which regulates the bleed air supply pressure to the refrigeration unit.

b. Bleed Air Supply Overpressure Switch.

This switch is located at the inlet to the refrigeration unit. It monitor's bleed air pressure to the unit and signals the regulating and shutoff valve to shut off air flow should pressures exceed 40 ± 3 psig.

c. Primary Heat Exchanger.

This heat exchanger is located within the refrigeration unit, and used to lower the high bleed air temperature prior to its routing to the compressor.

d. Compressor.

The compressor within the refrigeration unit is attached to the turbine and compresses the bleed air to a higher pressure and temperature.

e. Compressor Discharge Overtemperature Sensing Switch.

This switch is installed at the compressor discharge port and senses discharge temperature. The switch is normally closed and should open when temperatures reach 425° F ± 5° F, thus signaling the pressure regulator and shutoff valve to close, thereby shutting off the bleed air supply to the refrigeration unit.

f. Secondary Heat Exchanger.

This heat exchanger is located within the refrigeration unit and used to further lower the air temperature.

g. Cooling Turbine.

The cooling turbine is installed on the shaft with the compressor and receives the precooled air from the secondary heat exchanger. This air is still at a high pressure and upon passing through the turbine this high pressure is lowered by expansion. The turbine absorbs the energy from the high pressure bleed air and drives the compressor. The expansion of the bleed air plus its loss of energy causes its temperature to be reduced at the turbine discharge.

h. Mixing Muff.

This is a mixing device which is located immediately downstream of the cooling turbine for the purpose of mixing cold turbine outlet air with hot bleed air from the hot air bypass valve to control incoming air temperature.

i. Water Separator Assembly.

This assembly consists of a coalescer and water collector and drain. The drain consists of a line routed to the water aspirator on the air inlet side of the refrigeration unit, ahead of the heat exchangers. A small portion of bleed air is extracted from the heat exchanger and routed through the aspirator thus causing high velocity air flow through the aspirator which creates a vacuum on the drain line and removed any water from the water separator collector. This water is sprayed into the ambient air ahead of the heat exchanger, thus providing additional cooling capacity.

j. The ground cooling fan is energized only when the aircraft is on the ground through the landing gear squat switch. It provides air cooling for both the primary and secondary heat exchangers on the ground through a 28-volt vaneaxial fan.

13A-24. REMOVAL OF PRESSURE REGULATOR AND SHUTOFF VALVE.

a. Remove water separator in accordance with instructions given in this section.
b. Disengage bleed air circuit breaker.
c. Disconnect pressure regulator sensing tube from pressure regulating and shutoff valve.
d. Disconnect electrical plug from pressure regulating and shutoff valve.
e. Remove the couplings that secures the pressure regulator and shutoff valve assembly in position.
f. Remove pressure regulator and shutoff valve from airplane.

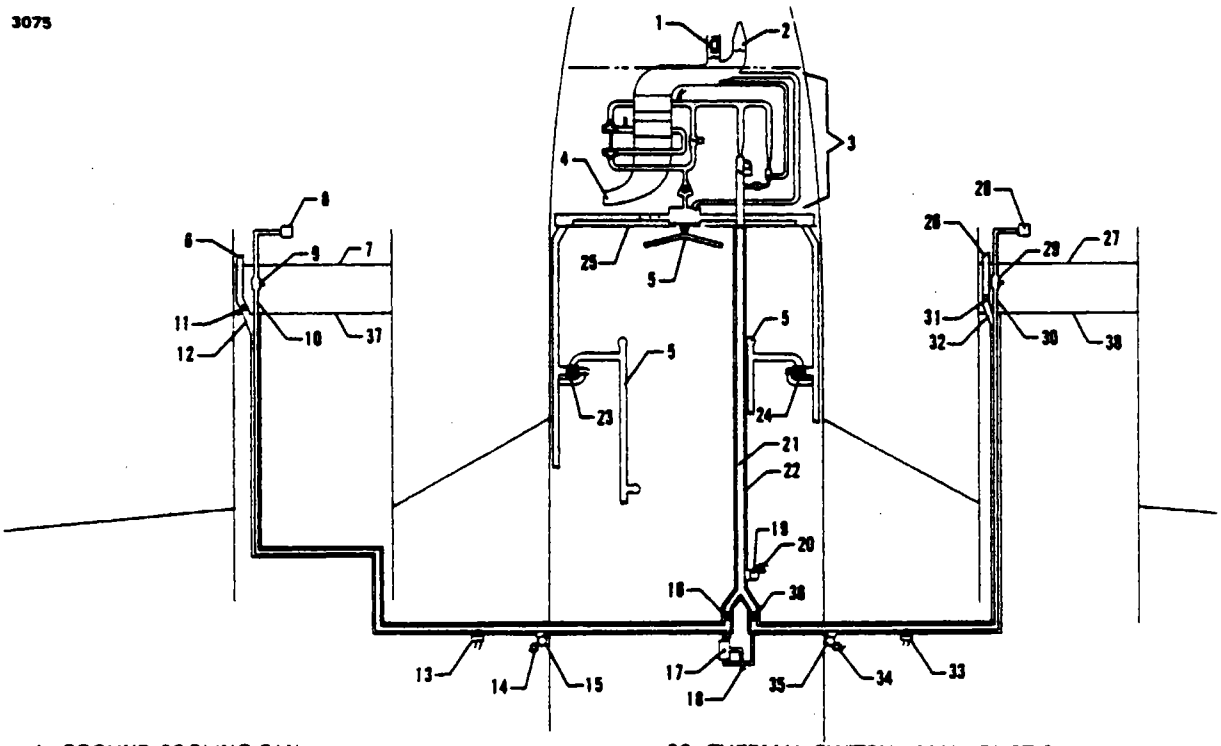

1 GROUND COOLING FAN
2. RAM AIR INLET
3 ECU INSTALLATION
4 ECU RAM AIR OUTLET (EXITS UNDER THE NOSE)
5 CABIN AIR DISTRIBUTION SYSTEM AND DEFROSTER
6 FIRESEAL VENT - LEFT SUPPLY DUCT SHROUD
7 LEFT ENGINE FIRESEAL
8. LEFT ENGINE BLEED AIR TAKEOFF
9. LEFT BLEED AIR CONTROL (SHUTOFF) VALVE
10. LEFT ENGINE BLEED AIR SUPPLY DUCT
11 THERMAL SWITCH - SHROUD FIRESEAL VENT (IF ACTIVATED, WILL ILLUMINATE "LEFT BLEED HOT" ANNUNCIATOR LIGHT)
12. PROTECTIVE SHROUD - LEFT BLEED AIR SUPPLY DUCT
13. DUCT THERMAL SWITCH (IF ACTIVATED, WILL ILLUMINATE "LEFT BLEED HOT" ANNUNCIATOR LIGHT)
14 THERMAL SWITCH - SHROUD WING ROOT VENT (IF ACTIVATED WILL ILLUMINATE "LEFT BLEED HOT" ANNUNCIATOR LIGHT)
15. WING ROOT VENT - LEFT SUPPLY DUCT SHROUD
16 CHECK VALVE - LEFT BLEED AIR SUPPLY DUCT
17 "ROLLING" BALL CHECK VALVE CONNECTED TO LINE TAPS FROM SUPPLY DUCTS
18. LINE TO PNEUMATIC SYSTEM
19 SHROUD VENT - MAIN SUPPLY DUCT
20. THERMAL SWITCH - MAIN DUCT SHROUD VENT (IF ACTIVATED, WILL ILLUMINATE BOTH LEFT AND RIGHT "BLEED HOT" ANNUNCIATOR LIGHTS SIMULTANEOUSLY)
21. MAIN (CENTRAL) BLEED AIR SUPPLY DUCT
22. PROTECTIVE SHROUD - MAIN SUPPLY DUCT
23. LEFT RECIRCULATION BLOWER
24. RIGHT RECIRCULATION BLOWER
25. FORWARD PRESSURE BULKHEAD
26. FIRESEAL VENT - RIGHT SUPPLY DUCT SHROUD
27. RIGHT ENGINE FIRESEAL
28. RIGHT ENGINE BLEED AIR TAKEOFF
29 RIGHT BLEED AIR CONTROL (SHUTOFF) VALVE
30. RIGHT ENGINE BLEED AIR SUPPLY DUCT
31. THERMAL SWITCH — SHROUD FIRESEAL VENT (IF ACTIVATED, WILL ILLUMINATE "RIGHT BLEED HOT" LIGHT ON ANNUNCIATOR)
32. PROTECTIVE SHROUD - RIGHT BLEED AIR SUPPLY DUCT
33. DUCT THERMAL SWITCH (IF ACTIVATED, WILL ILLUMINATE "RIGHT BLEED HOT" ANNUNCIATOR LIGHT)
34. THERMAL SWITCH - SHROUD WING ROOT VENT (IF ACTIVATED, WILL ILLUMINATE "RIGHT BLEED HOT" ANNUNCIATOR LIGHT)
35. WING ROOT VENT - RIGHT SUPPLY DUCT SHROUD
36. CHECK VALVE - BLEED AIR SUPPLY DUCT
37. LEFT ENGINE FIREWALL
38. RIGHT ENGINE FIREWALL

Figure 13A-10. Cabin Pressurization and Bleed Air System Schematic

13A-25. INSTALLATION OF PRESSURE REGULATOR AND SHUTOFF VALVE.

a. Ascertain that pressure regulator and shutoff valve are in position and secure with couplings. Torque couplings to 35 to 45 inch-pounds.

b. Connect pressure regulator sensing tube to pressure regulating and shutoff valve.

c. Connect the electrical plug to pressure regulating and shutoff valve.

d. Engage bleed air circuit breaker.

c. Install water separator in accordance with instructions given in this chapter.

13A-26. REMOVAL OF BLEED AIR SUPPLY OVERPRESSURE SWITCH.

a. Gain access to the overpressure switch. For switch location refer to Figure 13A-9 and 13A-10.

b. Disconnect the electrical connector from the switch.

c. Cut the safety wire and unscrew the switch from the receptacle.

d. Remove the switch and O-ring.

13A-27. INSTALLATION OF BLEED AIR SUPPLY OVERPRESSURE SWITCH.

a. Install new switch with new O-ring into receptacle.

NOTE

Assure proper high temperature O-ring is used. Refer to Parts Catalog.

b. Secure the switch in this position with safety wire.

c. Reconnect the electrical connector to the switch.

13A-28. REMOVAL OF COMPRESSOR DISCHARGE OVERTEMPERATURE SENSING SWITCH.

a. Gain access to the overtemperature switch. For switch location, refer to Figure 13A-9 and 13A-10.

b. Disconnect the electrical leads from the switch.

NOTE

Make note of the place from which each wire was removed to facilitate installation.

c. Loosen the nut and unscrew the switch from the receptacle.

d. Remove the switch and O-ring.

13A-29. INSTALLATION OF COMPRESSOR DISCHARGE OVERTEMPERATURE SENSING SWITCH.

a. Install new switch with new O-ring into receptacle.

NOTE

Assure proper high temperature O-ring is used. Refer to Parts Catalog.

b. Screw the switch into the receptacle.

c. Connect the wires to their proper place on the switch.

13A-30. REMOVAL OF WATER SEPARATOR.

a. Disconnect water line and inlet and outlet air connections from water separator.
b. Remove clamps securing water separator.
c. Remove water separator.

13A-31. CLEANING, INSPECTION AND REPAIRS OF WATER SEPARATORS. The coalescer cloth must be cleaned or replaced at intervals not more than 500 flight hours, except when operated in abnormally dusty or contaminating conditions.

a. Remove band and cover from water separator.
b. Remove coalescer cloth from inside water separator.
c. Wash coalescer cloth with warm water and mild detergent and rinse with clean water.
d. Replace coalescer cloth on inner housing with nap inside against the screen spring flat and firmly in place.
e. Install cover and band on water separator.

13A-32. INSTALLATION OF WATER SEPARATOR.

a. Secure water separator to hoses with clamps. Torque clamps to 30 to 35 inch-pounds.
b. Connect water line to water separator.

13A-33. REMOVAL OF GROUND COOLING FAN.

a. Gain access to the baggage compartment area and remove the hardware that secures the partition in its position between the baggage compartment and the area where the fan is located.
b. Remove the access panel on the right side of the nose section.
c. Loosen and remove the clamps securing the fan to the flexible rubber cuffs and the refrigeration unit.
d. Disconnect the electrical leads to the fan motor.
e. Slide the cuffs from the refrigeration unit so the fan motor can be twisted forward and out from the refrigeration unit.
f. Remove the fan.

13A-34. INSTALLATION OF GROUND COOLING FAN.

a. With the fan in position slide the rubber cuffs over the ends of the fan.
b. Connect electrical leads to fan motor.
c. Tighten the clamps that secures the fan in position.
d. Replace the access panel removed from right side of nose section.
e. Replace the partition removed from the baggage compartment.

13A-35. COOLING TURBINE. This unit consists of a turbine wheel and an impeller mounted on a common shaft and enclosed by a turbine torus and a compressor torus. The cooling turbine shaft rotates in a self-acting foil air bearing that uses a number of overlapping foil segments secured by retainers. These foil segments grip the shaft with a preload, and the rotating assembly does not rotate freely while at rest, like a ball bearing mounted assembly. During startup, air is drawn into the converging wedges until the pressure differential opposing the load equals the shaft weight. The bearings automatically adjust the film clearance according to load, speed, ambient air pressure, temperature, shaft expansion and misalignment. A lubricant is not used in the cooling turbine, and thus periodic lubrication is not required.

NOTE

An inch ounce torque wrench is required to check the air-bearing conditions. Refer to Cooling Turbine Check for proper procedure and torques.

13A-36. COOLING TURBINE CHECK. To check the cooling turbine for acceptable torque use an inch ounce torque wrench and the following procedure:

a. First gain access to the turbine end of the unit.
b. Place the torque wrench on the end of the turbine shaft.
c. Apply torque to the shaft in a clockwise (as viewed from the turbine end) direction only.

CAUTION

Any rotation of the turbine shaft in a counterclockwise direction could damage the foil segments of the air bearing.

d. The maximum acceptable torque values are 20 to 30 inch ounces.

13A-37. HEATING AND COOLING.

13A-38. CABIN TEMPERATURE CONTROL SYSTEM.

13A-39. DESCRIPTION OF OPERATION. The condition air supplied to the cabin is controlled by the operation of the cabin temperature control system. This system consists of cabin temperature sensor and controller, duct temperature sensor and hot air bypass valve. During normal operation (automode) the pilot sets cabin temperature with the cabin temperature potentiometer in the 60° F to 90° F cabin temperature range. The cabin temperature sensor and controller, contains a sensor element whose resistance is proportional to temperature. As the cabin temperature increases or decreases, the bridge circuit in the cabin temperature sensor and controller becomes unbalanced; a signal is sent to the hot air bypass valve to open or close it. This controls the temperature of the condition airflow to the cabin, in the event a failure occurs in normal mode (auto) position. A manual temperature control is also incorporated in the system. Place the manual/auto switch in the manual position, and control the temperature with the manual temp. switch, heat or cool, for control of the hot air bypass valve, to maintain cabin temperature.

13A-40. TROUBLESHOOTING. Probable troubles peculiar to the environmental control system components covered in this chapter are listed in Table XIIIA-II, along with their probable causes and suggested remedies after the trouble has been corrected; check the entire system for security and operation of its components.

13A-41. COMPONENT DETAILED DESCRIPTIONS AND LOCATIONS.

a. Hot Air Bypass Valve: This valve is installed between the turbine mixing muff and the bleed air line to the primary heat exchanger. Its function is to modulate the flow of the hot bleed air into the mixing muff in accordance with signals sent to the valve from the cabin temperature sensor and controller, and the manual temp. control switch. This valve uses an electric actuator motor.

b. Duct Temperature Sensor: This sensor acts as a temperature limiter and prevents cabin supply temperature from exceeding 250° F or going below 35° F. The duct temperature sensor is installed in the cabin condition air supply duct. If duct temperatures exceed normal range of operation, a signal is sent to the temperature sensor and controller to open or close the hot air bypass valve.

c. Cabin Temperature Sensor and Controller: This unit works in conjunction with the duct temperature and cabin temperature sensor to control the hot air bypass valve to maintain the desired cabin temperature. The unit is mounted centrally in the aft cabin headliner. The controller range of operation is between 35° F ± 3° F to 250° F.

d. Cabin Temperature Potentiometer (Level Set): Is set to the desired temperature and is maintained by the cabin temperature sensor and controller. The level set range is between 60° F to 90° F and is located on the lower right side pilot's instrument panel.

e. Mode Switch: This is a single two pole switch either auto or manual. It is located on the lower right side of the pilot's instrument panel.

f. Manual Temperature Control: This switch is used to control the hot air bypass valve only in the manual mode. The switch is located on the lower right side of the pilot's instrument panel.

13A-42. REMOVAL OF HOT AIR BYPASS VALVE.

a. Disengage cabin temperature circuit breaker.
b. Disconnect electrical plug from bypass valve.
c. Remove couplings securing bypass valve to duct flange.
d. Remove bypass valve and seals.

13A-43. INSTALLATION OF HOT AIR BYPASS VALVE.

a. Secure bypass valve and new seals to duct flange using the couplings removed. Torque couplings to 35 ± 3.5 inch-pounds.
b. Connect electrical connector to bypass valve.
c. Engage cabin temperature circuit breaker.

13A-44. REMOVAL OF DUCT TEMPERATURE SENSOR.

a. Gain access to the duct temperature sensor located in the left distribution duct ahead of F.S. 57.00 forward pressure bulkhead.
b. Remove the four screws that secures the sensor in position.
c. Remove the sensor with gasket.

13A-45. INSTALLATION OF DUCT TEMPERATURE SENSOR.

a. Install new sensor and gasket into position and secure with four screws.

13A-46. REMOVAL OF CABIN TEMPERATURE SENSOR AND CONTROLLER.

a. Remove the screws and washers that secures the unit in position.
b. Pull the unit out far enough so the electrical connector can be disconnected.
c. Remove cabin temperature and controller.

13A-47. INSTALLATION OF CABIN TEMPERATURE SENSOR AND CONTROLLER.

a. Install new sensor into position and connect the electrical connector.
b. Secure the unit with washers and screws.

13A-48. REMOVAL OF RECIRCULATION BLOWERS.

a. Gain access to the recirculation blowers by removing the third and fourth seats, carpeting and/or cabinets and divider.
b. Remove screws securing airbox and remove airbox.
c. Disconnect electrical wires, loosen hose clamp, remove hose, remove four screws from mounting bracket and remove blower assembly.

13A-49. INSTALLATION OF RECIRCULATION BLOWERS.

a. Position blower assembly and secure with four screws previously removed, install hose, tighten clamp and connect electrical wires.
b. Position airbox and secure with screws previously removed.
c. Install carpeting, third and fourth seats and/or cabinets and divider.

TABLE XIIIA-II. TROUBLESHOOTING (PA-31T2 ENVIRONMENTAL CONTROL SYSTEM)

Trouble	Cause	Remedy
Bleed air leakage in primary or secondary heat exchanger.	Rupture or corrosion.	Replace heat exchanger.
Cooling turbine will not start.	Excessive air leakage.	Replace seals.
	Frozen bearing due to contamination or improper shimming.	Replace cooling turbine.
Cooling turbine stops when required to run.	Excessive air leakage.	Repair leaks.
Water separator blockage.	Coalescer cloth is iced.	Check anti-ice system.
	Dirt contamination.	Clean coalescer cloth.
Water separator coalescer cloth is damaged.	Overtemperature.	Replace coalescer cloth.
Excessive moisture entering cabin.	Coalescer cloth is torn or dirty.	Clean coalescer cloth. If torn, replace.
Conditioned air temperature too high.	Ram air duct obstructed or face of heat exchanger. clogged.	Remove obstruction or debris.
	Heater exchanger leaking.	Replace heat exchanger.
	Cooling turbine rotating torque unsatisfactory. (See Note.)	Replace cooling turbine.
	Bypass valve inoperative.	Check valve wiring and operation. Replace as required.
Insufficient conditioned airflow.	Bleed air ON/OFF valve not full open.	Check wiring.
	Leaks in joints or connections.	Repair leaking joints and connections.
	Cooling turbine rotating turbine unsatisfactory. (See Note.)	Replace cooling turbine.
	Heat exchanger leaking.	Replace heat exchanger.

NOTE

Refer to label on cooling turbine for maximum acceptable torque value.

13A-50. ECS AUTOMATIC TEMPERATURE CONTROL TROUBLESHOOTING.

a. Remove the right side nose cone cover to observe the ECS temperature control motorized bypass valve. Use a flashlight to observe that the words "OPEN" and "CLOSE" are stamped on the valve stem exposed between the valve and the gear motor. (Refer to Figure 13A-11.)

b. Pull both "FUEL CONT. HEAT" circuit breakers, and turn on aircraft battery "MASTER." Test to make sure that the CABIN COMFORT MODE select switch causes the fan to run in the HYLZ CABIN TEMP. CONTROL "boat" only when switched up to AUTO mode, and not when switched down into MANUAL mode.

NOTE

A shorted DUCT SENSOR probe may lock this system into a mediocre AUTO mode, evidenced by the fan always running in the HYLZ "boat." If necessary, disconnect the DUCT SENSOR probe or the "boat," to stop the fan.

c. Select MANUAL mode and hold the MANUAL TEMPERATURE CONTROL switch up into the HEAT position, for more than one minute, and watch the bypass valve stem, to make sure the motor runs until its internal limit switch shuts it off with "OPEN" in view on the valve stem. Then, hold the MANUAL TEMPERATURE CONTROL switch down to COOL, for more than a minute, to make sure the bypass valve runs until its internal limit switch shuts off with "CLOSE" in view on the valve stem. Then, hold the MANUAL TEMPERATURE CONTROL switch up in HEAT for about 30 seconds, to leave the bypass valve about half open. If the words "OPEN" and "CLOSE" did not show up on the stem, as expected, unplug the valve and replace it. Switch the battery MASTER off.

d. Now that the ECS MANUAL mode has been tested, pull the CABIN COMFORT circuit breaker, unscrew and unplug the HYLZ "boat," and check its harness connector for shorts to ground, with an ohmmeter. None of the 9 pins in the 14 pin harness connector may show any leakage to ground. (Short to ground on pin 11 can lock the controller in AUTO mode. Short to ground on pin 10 may lock the AUTO mode in always maximum COOL.)

e. With mode switch in MANUAL hold the MANUAL TEMPERATURE CONTROL up and down, and verify that up in HEAT grounds pin 4, and down in COOL grounds pin 3.

f. Switch the mode switch up to AUTO and verify that this grounds pin 2.

g. Measure between harness connector pins 9 and 10; this should measure about 100 ohms, with the CABIN COMFORT temperature level set knob rotated full CCW to the COOL stop, and about zero ohms, with the knob rotated full CW to the WARM stop . . . leave the knob at mid scale (pointing up), or about 50 ohms, after this test.

h. Measure between pins 8 and 11 and also between 12 and 11; if the duct sensor probe is at room temperature, both these readings should be about 100 ohms (+ 20 ohms).

i. Connect the HYLZ "boat" to the test harness extension (with RED and BLUE light pigtail), and connect the test harness extension to the aircraft harness. Push all the wire (except the RED and BLUE light pigtail) up into the hole, and remount the "boat" to its hole in the ceiling . . . let the light pigtail hang out on the pilot's side of the aircraft, so the lights can easily be seen from the cockpit. Tape a small thermometer to the RED and BLUE light pigtail, to keep track of cabin temperature.

j. Push in the cabin comfort circuit breaker and turn on the aircraft battery MASTER switch. The cabin comfort mode switch is up in AUTO . . . this should start the fan in the HYLZ "boat," and one of the pigtail lights will probably come on.

k. Rotate the cabin comfort temperature select knob back and forth to find a spot where both RED and BLUE pigtail lights stay out . . . the pointer should indicate approximately the temperature of the air that the internal fan is blowing thru the "boat." Imagine that these temperature markings are painted on the placard behind the temperature select knob: 11:00 o'clock = 60°, (12:00 is straight up) 1:00 = 70°, 3:00 = 80°, 5:00 = 90°. There will be a null or dead band equivalent to about 3° F., where the knob can be rotated a little without turning on either RED or BLUE light.

l. Unplug the duct sensor connector. (This high probe resistance looks like maximum hot probe) and verify that the BLUE light comes on and can't be kept off with any temperature select knob setting.

m. Use a piece of 14 gauge solid wire to make a jumper to short out pins C to D, on the probe harness connector (this low probe resistance looks like a frozen probe) and verify that the RED light comes on and can't be kept off with any temperature select knob setting. Remove the jumper from the probe connector and reconnect the aircraft harness to the duct sensor probe.

n. Verify that the temperature select knob can still be set in the dead band position to keep both RED and BLUE lights out. Now go back to the "boat" and blow slightly warmer air into the opening where the internal fan is drawing cabin air into the boat - your breath is probably warm enough - and verify that the BLUE light starts to pulse, telling the bypass valve "close some, to make us a little cooler." Allow the "boat" to cool back down to cabin temperature to where both lights are out. If it is practical, hold a piece of ice, or an ice cube, in the airstream being sucked into the "boat" (DO NOT GET WATER IN THE "BOAT") and note that the RED light now begins to pulse, telling the valve "open some, to make us a little warmer." Take the ice away and note that the red light eventually stays out.

o. This completes ground verification of proper AUTO temperature control . . . if the system works properly in MANUAL mode, it will very likely now work properly in AUTO mode . . . but this system can be fooled into unsatisfactory in flight operation by uninformed pilot operation . . . here are 3 wrong ways:

1. If the pilot turns the temperature select knob to the 1:00 or 2:00 position and selects AUTO mode, before engine start, and leaves that switch and knob alone, the cabin will probably get and stay at a comfortable temperature, if that could have been achieved with MANUAL mode.

2. If the pilot turns the temperature select knob to a new position, and does not wait 10 minutes before turning the knob again, the AUTO mode circuitry will not be able to figure out (and gradually produce within 3° F.) just which cabin temperature the pilot really wants. Do not twist the level set knob every few minutes.

3. If the pilot moves the windshield defroster select lever from open to close, or from close to open, the cockpit temperature around the pilot's shoulders can change by more than 5° F. and the cabin comfort system does not see this change in the cabin . . . if the pilot then turns the temperature select knob to make the cockpit warmer or cooler, and passengers in the cabin were comfortable, they will then be made too warm or too cool. Do not offset opening or closing the defroster lever by twisting the temperature level set knob, if there are sensitive passengers in the cabin.

NOTES

Do not twist the temperature set knob more than a few degrees at a time.

Do not touch the CABIN COMFORT control panel before waiting 10 minutes since the last change.

As the sun sets, push the defroster lever open to keep the cockpit warm without bothering the passengers . . . otherwise, slip on a jacket to counter the chill of sunset and darkened cockpit windows.

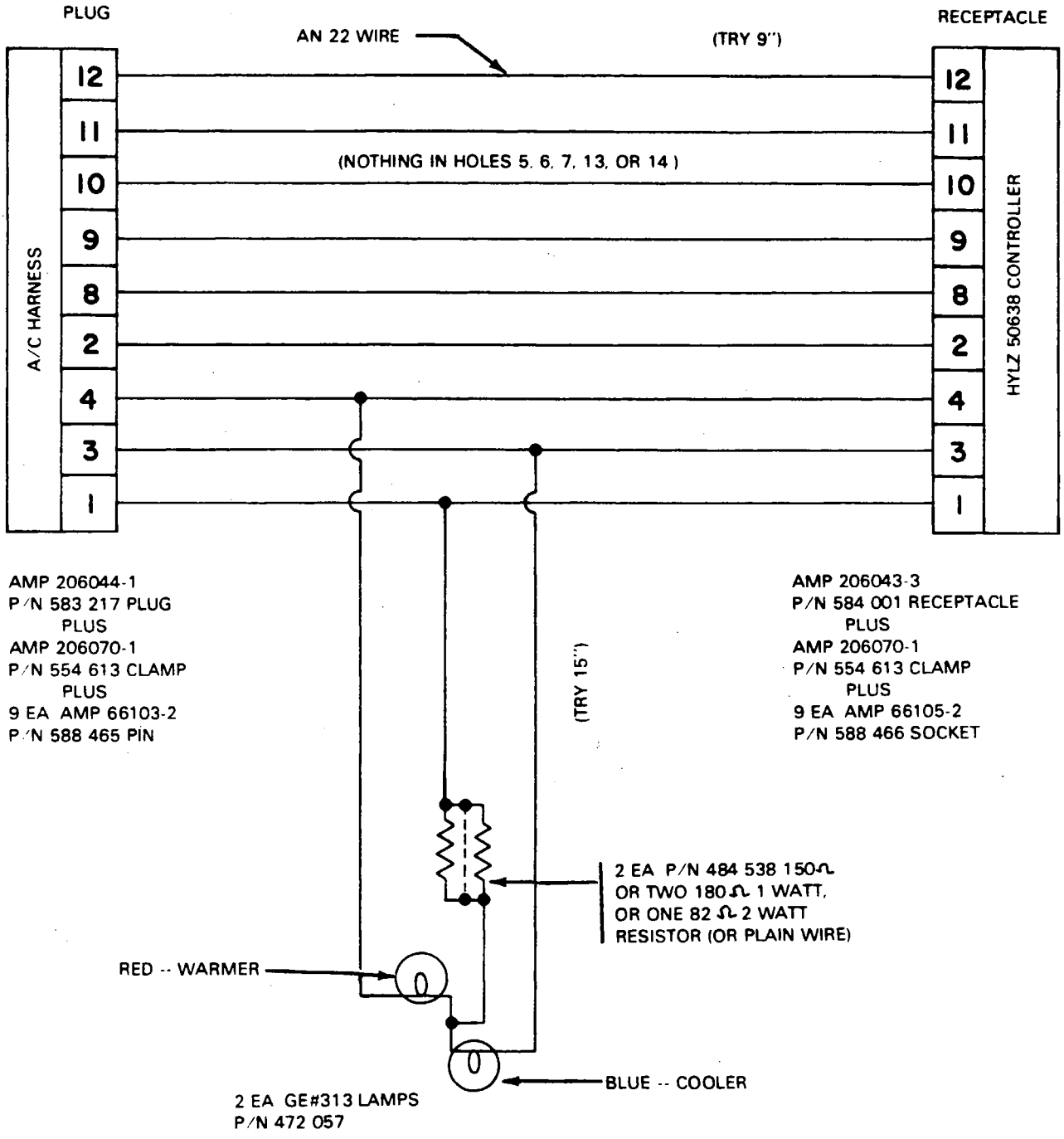

COLOR LIGHT BULBS RED AND BLUE WITH "FLAIR EL MARKO PERMANENT" FELT TIP MARKERS, OR OTHER SUITABLE METHOD ACTUALLY, A PAIR OF #327 POST LIGHT BULBS AND THREE STRAIGHT WIRES, WITH NO SERIES DROPPING RESISTANCE, WORK OK (SCRAPE CHROME PLATING OFF THE BULB BASES TO SOLDER WIRES FROM PINS 3 AND 4), BUT THE BIGGER, DIMMED BULBS ARE EASIER TO SEE

Figure 13A-11. ECS Test Harness Extension

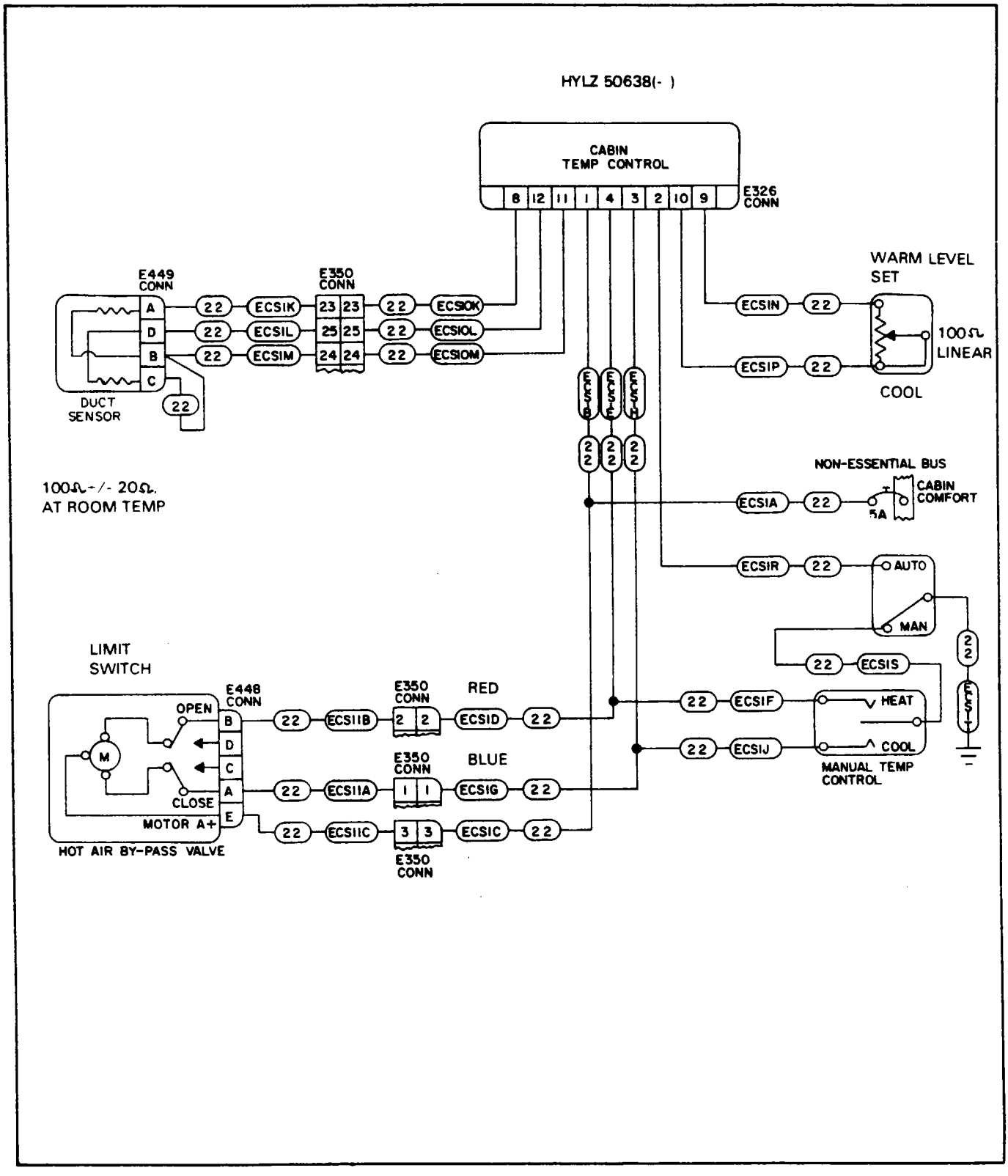

Figure 13A-12. Cabin Comfort

6B21 THRU 6B24
INTENTIONALLY LEFT BLANK

SECTION XIV
ACCESSORIES AND UTILITIES

Paragraph		Aerofiche Grid No.
14-1.	Introduction	6C5
14-2.	Oxygen System	6C5
14-3.	Description and Principles of Operation	6C5
14-4.	Troubleshooting	6C5
14-5.	Safety Precautions	6C5
14-6.	Inspection and Overhaul Time Limits	6C5
14-7.	Testing for Leaks	6C6
14-8.	Maintenance	6C6
14-9.	Cleaning Operations	6C6
14-10.	Removal of Outlets	6C9
14-11.	Installation of Outlets	6C9
14-12.	Purging the System	6C9
14-13.	Cleaning of Face Masks	6C9
14-14.	Removal of Oxygen Cylinder, Regulator and Compensator	6C10
14-15.	Installation of Oxygen Cylinder, Regulator and Compensator	6C10
14-16.	Removal of Filler Valve	6C10
14-17.	Installation of Filler Valve	6C10
14-18.	Removal of Pressure Gauge	6C11
14-19.	Installation of Pressure Gauge	6C11
14-19a.	Removal of Overpressure Discharge Disc (Visual)	6C12
14-19b.	Installation of Overpressure Discharge Disc (Visual)	6C12
14-20.	Propeller and Engine Air Inlet Lip Deicing System	6C13
14-21.	Description and Principles of Operation	6C13
14-22.	Deicer System Operational Check	6C14
14-23.	Troubleshooting	6C18
14-24.	Using the Ammeter	6C18
14-25.	Helpful Tips	6C18
14-26.	Inspection	6C19
14-27.	50 Hour Inspection	6C19
14-28.	100 Hour Inspection	6C19
14-29.	Repair Procedure for Individual Components	6C21
14-30.	Checking for Brush Wear	6C21
14-31.	Replacement of Brushes	6C21
14-32.	Alignment of New Brushes	6C24
14-33.	Slip Rings	6C24
14-34.	Machining of Slip Rings	6C24
14-35.	Replacement of Slip Rings	6D1
14-36.	Replacement of Brush Block with Modular Brush Assemblies	6D1
14-37.	Brush Module Replacement	6D1
14-38.	Deicer Boots	6D4
14-39.	Resistance Check of Deicer Boots	6D4
14-40.	Replacement	6D4
14-41.	Repair of Propeller Deicer Lead Strap	6D4
14-42.	Removal of Deicers	6D4
14-42a.	Removal and Installation of Air Inlet Lip Assembly (S/N 31T-8304001 and up)	6D5
14-43.	Preparation of Surface Prior to Installation of Deicer	6D5

Paragraph			Aerofiche Grid No.
	14-44.	Application of Cement	6D8
	14-44a.	Preparation of Engine Inlet Lip Boots Prior to Installation	6D10
	14-45.	Installation of Deicers and Required Materials	6D10
	14-45a.	Installation of Engine Inlet Lip Deicer and Required Materials	6D12
	14-46.	Preparation and Application of Sealer	6D15
	14-47.	Wrinkled Deicers	6D18
	14-48.	Electrical Check of Deicers	6D18
	14-49.	Installation of Propeller Deicer Straps and Wire Harness	6D19
	14-50.	Balancing	6D19
	14-51.	Final Electrical Check	6D20
	14-52.	Other Components	6D20
	14-53.	Timer Test	6D20
14-54.	Pneumatic Deicing System		6E4
14-55.	Introduction		6E4
14-56.	Description and Principles of Operation		6E4
14-57.	Troubleshooting		6E4
	14-58.	Operational Check	6E4
	14-59.	Electrical Test	6E4
	14-60.	Pressure Leakage Test	6E5
	14-61.	Pneumatic Regulator Adjustment	6E5
	14-62.	Component Maintenance and Replacement	6E5
	14-63.	Timer	6E5
	14-64.	Inspections	6E5
	14-65.	Ground Procedure	6E5
	14-66.	100 Hour Inspection	6E7
	14-67.	Removal of Boots	6E7
	14-68.	Repair of Boots	6E9
	14-69.	Cold Repair	6E9
	14-70.	Vulcanized Repair	6E11
	14-71.	Materials for Vulcanized Repairs	6E12
	14-72.	Definition of Terms	6E12
	14-73.	General Procedure	6E13
	14-74.	Curing	6E13
	14-75.	Surface Scuffs	6E15
	14-76.	Deep Scuff Through Neoprene Surface	6E16
	14-77.	Holes or Tears Through Surface Side of Tube Area	6E16
	14-78.	Holes or Tears Through Backside of Tube Area	6E17
	14-79.	Holes or Tears Through Two Sides	6E17
	14-80.	Hole Through Deicer Extending From One Tube Into Another	6E17
	14-81.	Hole Through Deicer Outside of Tube Area	6E18
	14-82.	Installation	6E18
	14-83.	Preparation of Leading Edges	6E19
	14-84.	Preparation of Deicer	6E20
	14-85.	Mounting Deicer on Leading Edge	6E20
	14-86.	Adhesion Test	6E22
	14-87.	Maintenance	6E22
	14-88.	Agemaster No. 1 and Icex Application	6E23
	14-89.	Resurfacing Conductive Cement	6E24
14-90.	Ice Detection Light		6F3

Paragraph		Aerofiche Grid No.
14-91.	Introduction	6F3
14-92.	Description and Operation	6F3
14-93.	Servicing	6F3
14-94.	Removal	6F3
14-95.	Installation	6F3
14-96.	Heated Windshield	6F3
14-97.	Windshield Wipers	6F3
14-98.	Propeller Synchronizer	6F4
14-99.	Description of Propeller Synchronizer System	6F4
14-100.	Functional Test	6F4
14-101.	Troubleshooting with Minimum Field Equipment	6F4
14-102.	Ground Check	6F4
14-103.	Flight Checks	6F8
14-104.	Maintenance	6F9
14-105.	Removal of Trimmer Assembly	6F9
14-106.	Installation of Trimmer Assembly	6F9
14-107.	Synchronizer Rigging	6F10
14-108.	Removal of Actuator	6F11
14-109.	Installation of Actuator	6F11
14-110.	Service of Actuator	6F11
14-111.	Removal of Control Box	6F11
14-112.	Installation of Control Box	6F12
14-113.	Test Equipment	6F12
14-114.	Bench Testing the Actuator	6F12
14-115.	Propeller Synchrophaser (Woodward Type I)	6F17
14-116.	Description of Propeller Synchrophaser System	6F17
14-117.	Functional Test	6F17
14-118.	Troubleshooting with Minimum Field Equipment	6F17
14-119.	Ground Check	6F17
14-120.	Flight Checks	6F21
14-121.	Maintenance	6F23
14-122.	Removal of Trimmer Assembly	6F23
14-123.	Installation of Trimmer Assembly	6F23
14-124.	Synchrophaser Rigging	6F24
14-125.	Removal of Actuator	6G1
14-126.	Installation of Actuator	6G1
14-127.	Service of Actuator	6G2
14-128.	Removal of Control Box	6G2
14-129.	Installation of Control Box	6G2
14-130.	Test Equipment	6G2
14-131.	Bench Testing the Actuator	6G2
14-132.	Magnetic Phase Pickup Removal, Installation and Adjustment	6G3
14-133.	Propeller Synchrophaser (Woodward Type II)	6G8
14-134.	Description of Propeller Synchrophaser System	6G8
14-135.	Functional Test	6G8
14-136.	Troubleshooting with Minimum Field Equipment	6G8
14-137.	Ground Check	6G8
14-138.	Flight Checks	6G12

Paragraph		Aerofiche Grid No.
14-139	Ohmmeter Check of Magnetic Pickup	6G12
14-140.	Removal of Control Box	6G14
14-141.	Installation of Control Box	6G14
14-142.	Magnetic Phase Pickup Removal, Installation and Adjustment	6G14
14-142a.	Propeller Autofeather System	6G14
14-142b.	Description and Principles of Operation	6G14
14-142c.	Autofeather Ground Operational Check	6G15
14-142d.	Autofeather Electrical Ground Check	6G16
14-143.	Engine Compartment Fire Control	6G19
14-144.	Fire Detection System	6G19
14-145.	General	6G19
14-146.	Description and Operation	6G19
14-147.	Fire Extinguishing System	6G20
14-148.	General	6G20
14-149.	Description and Operation	6G20
14-150.	Testing Extinguishing System	6G20
14-151.	Removal of Fire Extinguisher Bottle	6G21
14-152.	Servicing Fire Extinguisher Bottle	6G22
14-153.	Installation of Fire Extinguisher	6G23
14-154.	Fire Extinguisher, Hand Held	6G23
14-155.	Portable Fire Extinguisher, Inspection and Maintenance	6G23
Appendix	Window Inspection and Repair - Standard Practices	6H1

SECTION XIV

ACCESSORIES AND UTILITIES

14-1. INTRODUCTION. This section covers accessories and utilities which are available in the airplane and are not covered in other sections of this Service Manual. This information provides instructions for remedying difficulties which may arise in any of the accessories or utilities, and the instructions are organized so the mechanic may refer to whichever component or system he must repair or adjust.

14-2. OXYGEN SYSTEM.

14-3. DESCRIPTION AND PRINCIPLE OF OPERATION. The oxygen system consists of an oxygen cylinder, regulator, compensator (if FAR 135 oxygen system is being used), filler valve, pressure gauge, outlets, masks and an ON/OFF control. High pressure is routed from the cylinder and regulator to the pressure gauge. Low pressure is routed from the cylinder and regulator to the outlets and masks, through another line, whenever the control knob is pulled to the ON position. Each outlet has a spring-loaded valve which prevents the flow of oxygen until a mask hose is engaged in the outlet.

14-4. TROUBLESHOOTING. A troubleshooting chart is located at the back of the oxygen system portion of this section.

14-5. SAFETY PRECAUTIONS. Utmost care must be exercised in servicing, handling and inspection of the oxygen system. A fully charged oxygen cylinder contains enough pressure to cause serious injury to personnel and damage to equipment. Keep hands, tools, and working area clean and post NO SMOKING signs. Keep all components of the system free from oil, grease, fuel and all readily combustible material. Never allow electrical equipment to come in contact with the oxygen cylinder. Keep fire and heat away from oxygen equipment and take care not to generate sparks with carelessly handled tools.

14-6. INSPECTION AND OVERHAUL TIME LIMITS. It is recommended that inspection and overhaul be conducted by an FAA Approved Station or the manufacturer, Scott Aviation. The following checks and chart gives recommended inspection and overhaul time for the various parts of the oxygen system:

a. Standard weight cylinders (ICC or DOT 3AA 1800 classification) must be hydrostatic tested every 5 years. The lightweight cylinders (ICC or DOT 3HT 1850 classification) must be hydrostatic tested every 3 years and must be retired from service after 24 years or 4380 pressurizations, whichever occurs first. The month and year of the last test is stamped on the cylinder beneath the ICC identification.
b. The outlets should be checked for leakage both in the non-use condition and for leakage around an inserted connector.
c. The high pressure gauge may be checked for accuracy by comparing its indicated pressure with that of a gauge of known accuracy.
d. Inspection of the regulator may be effected by introducing into an outlet a mask connector to which is attached a 100 psi gauge. With one other outlet flowing through a plugged in mask, the indicated regulator output pressure shall be not less than 45 psi at sea level with 200 psi supply cylinder pressure. It should be noted that the permissible leakage through the 1/16 diameter vent hole in the side of the upper regulator housing is 10 cc/min. maximum, when the regulator is turned on. There shall be no external leakage anywhere on the regulator when it is turned off. All fittings shall be leak free.

14-7. TESTING FOR LEAKS. Apply detector fluid type CD-1 solution or its equivalent. The solution should be shaken to obtain suds or foam. The suds or foam should be applied sparingly to the joints of a closed system. Look for traces of bubbles. No visible leakage should be found. Repair or replace any defective parts and retest system. With the system pressurized to service pressure, further tests can be made. The rate of any leak should not exceed one percent of the total supply per 24 hour period. All traces of the detector fluid should be wiped off at the conclusion of the examination.

14-8. MAINTENANCE.

a. Check that all lines have sufficient clearance between all adjacent structures and are secured in place. Also check the cylinder to be sure it is securely mounted.

b. Check the cylinder for the ICC identification number and for the date of the last FAA inspection and test.

c. If cylinder is completely empty, it must be completely disassembled and inspected in an FAA approved facility before recharging.

d. Any lines that are defective should be replaced with factory replacements.

e. Clean all lines and fittings as described in Paragraph 14-9.

f. Use Ribbon Dope Thread Sealant (Permacel 412) on male ends of fittings only. Wrap thread in direction of thread spiral, beginning with the second thread on the fitting. Avoid getting any sealant into the lines.

14-9. CLEANING OPERATIONS. To remove oil and grease from tubing and fittings, one of the following cleaning methods may be used:

a. First Method:

1. A vapor degreasing with stabilized Trichlorethylene conforming to Specification MIL-T-7003 shall be used.

2. Blow tubing clean and dry with a stream of clean, dry, filtered air. Care shall be taken to insure that the interior of the tubing and fittings are thoroughly cleaned.

b. Second Method:

1. Flush with naphtha conforming to Specification TT-N-95.

2. Blow clean and dry off all solvent with water pumped air.

3. Flush with anti-icing fluid conforming to Specification MIL-F-566 or anhydrous ethyl alcohol.

4. Rinse thoroughly with fresh water.

5. Dry thoroughly with a stream of clean, dried, filtered air or by heating at a temperature of 250° to 300°F for a suitable period.

6. The solvents may be reused provided they do not become excessively contaminated with oil. This condition shall be determined as follows:

(a) Completely evaporate 100 milliliters of the liquid in a weighed glass dish. Evaporation may be accomplished by heating at 200°F for approximately one-half hour.

(b) After evaporation, cool and weigh the residue. The solvent shall not be used if the residue exceeds 100 milligrams in weight.

c. Third Method:

1. Flush with hot inhibited alkaline cleaner until free from oil and grease.

2. Rinse thoroughly with fresh water.

3. Dry thoroughly with a stream of clean, dry, filtered air or by heating at a temperature of 250° to 300°F for a suitable period.

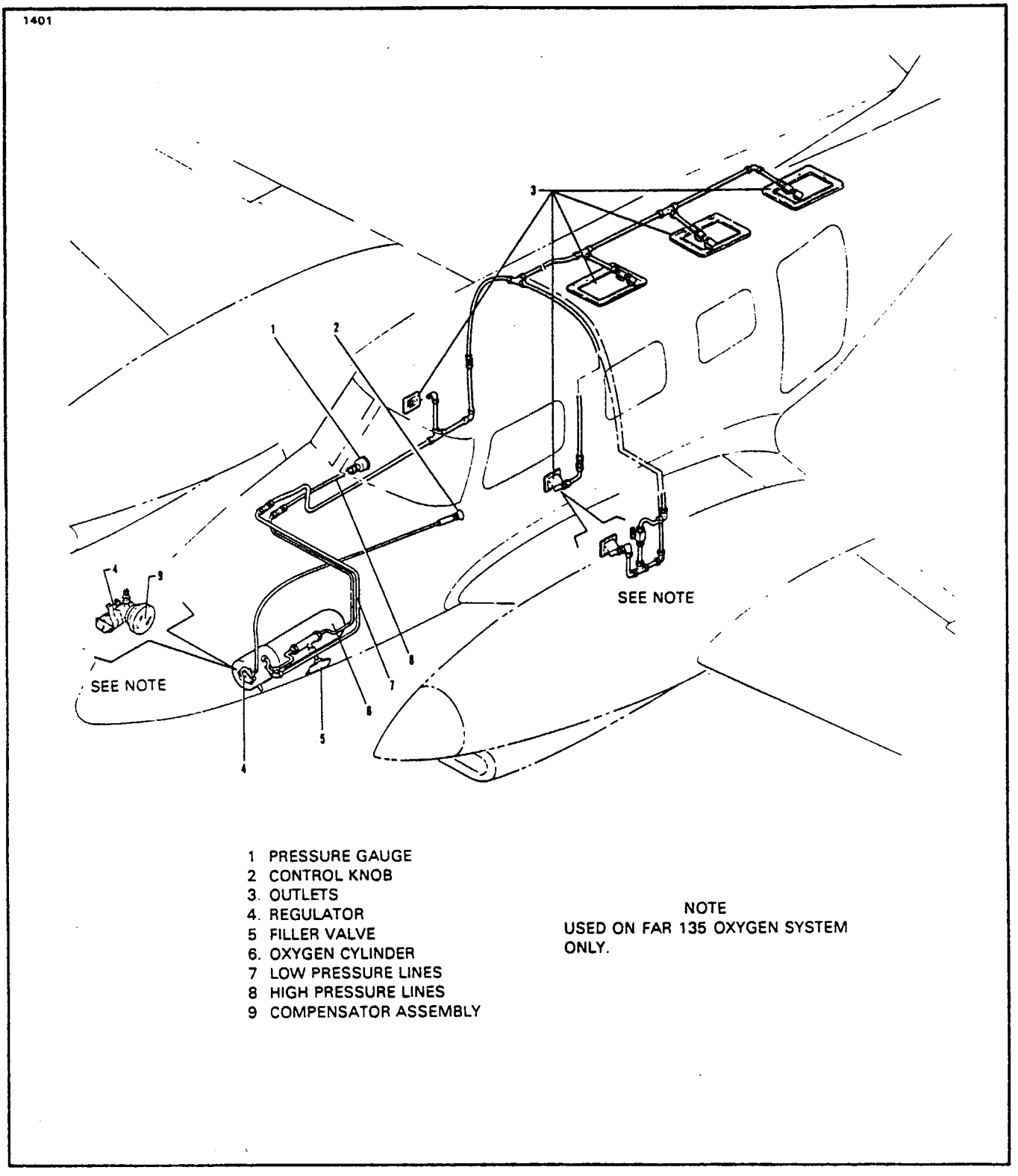

Figure 14-1. Oxygen System Installation (PA-31T and PA-31TI)

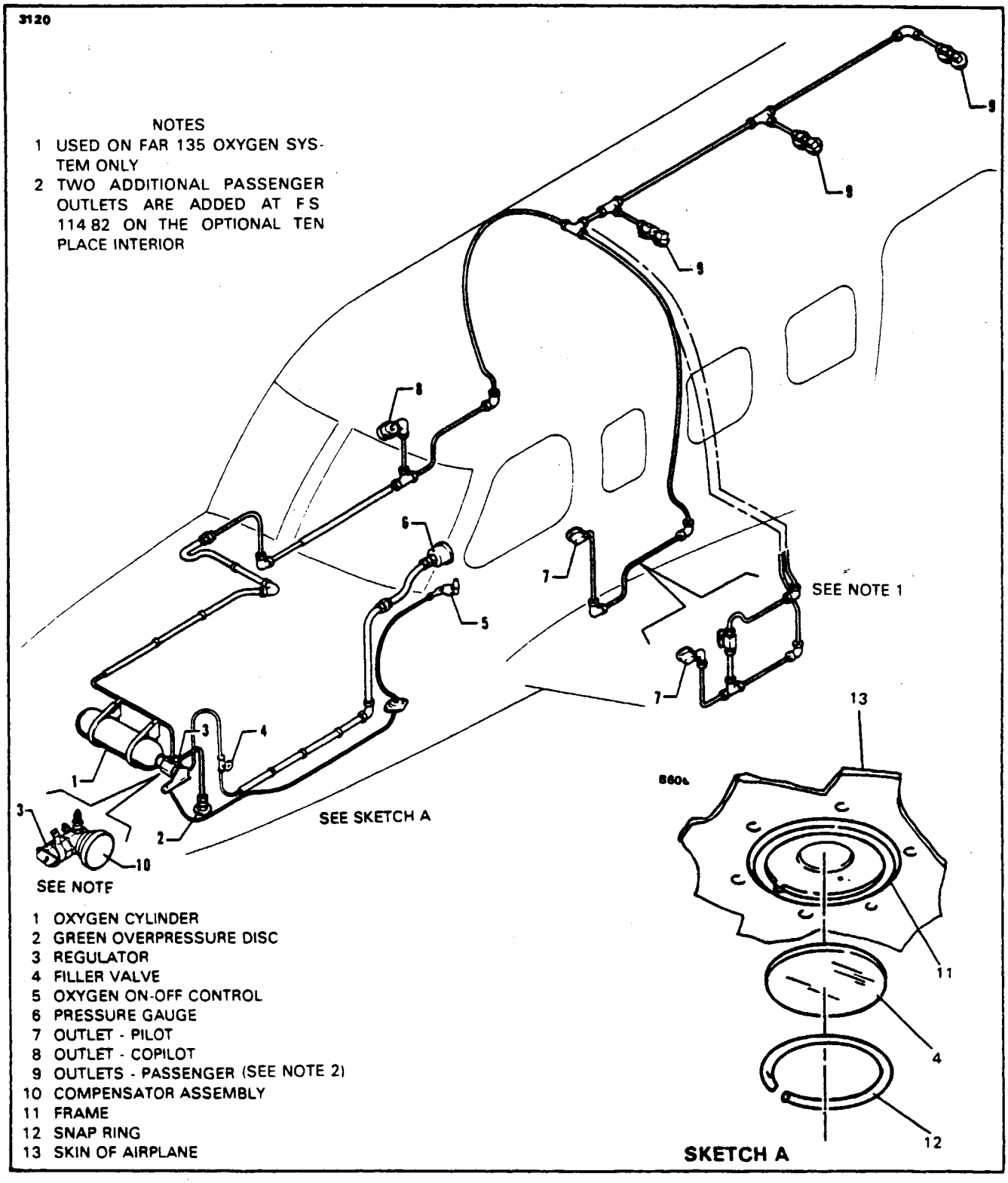

Figure 14-2. Oxygen System Installation (PA-31T2)

TABLE XIV-I. OXYGEN SYSTEM COMPONENTS LIMITS

PARTS	INSPECTION	OVERHAUL
Regulator	200 Flight Hrs.	5 Yrs.
Pressure Gauge	200 Flight Hrs.	5 Yrs.
High Pressure Lines	200 Flight Hrs.	
Low Pressure Lines	200 Flight Hrs.	
Outlets (Cabin)	200 Flight Hrs.	5 Yrs.
External Recharge Valve	Each Use	Replace Every 5 Yrs.
Masks	Each Use	Replace as Necessary

14-10. REMOVAL OF OUTLETS.

a. Using a suitable spanner wrench, remove the outer half of the outlet.
b. Remove the screws holding the trim panel and remove the panel.
c. The outlet can now be removed from the low pressure line.

14-11. INSTALLATION OF OUTLETS.

a. Apply sealant (Permacel #412) to the male end of the fitting.
b. Connect the outlet to the low pressure line.
c. Position the trim panel and secure with screws.
d. Position the outer half outlet and secure with a suitable spanner wrench.
e. Torque the fittings into the outlets approximately 30 inch-pounds. Do not over torque as this could damage the outlet.

14-12. PURGING THE SYSTEM. The system should be purged whenever the cylinder pressure falls below 50 psi or if any lines are left open for any length of time. Also, whenever there are any offensive odors present, it will be necessary to purge the system. Use the following procedure:

a. Park the airplane in a NO SMOKING area.
b. Keep all doors and windows open.
c. Be sure all electrical systems are shut off.
d. Connect the oxygen recharging unit to the filler valve.
e. Plug the oxygen masks into the outlet valves and turn on the system.
f. Set the recharging unit pressure regulator to deliver 50 psi and let the system purge for one hour. If any odor is still present, repeat the procedure for one or more hours. If the odor persists after the second purging, replace the cylinder.

14-13. CLEANING OF FACE MASKS. The disposable masks are designed for one time use and require no maintenance. The pilots and copilots masks can be cleaned as follows:

a. Remove the microphone from the mask.
b. Remove the sponge rubber discs from the mask turrents. Do not use soap to clean sponge rubber discs, as this would deteriorate the rubber and give off unpleasant odors. Clean in clear water and squeeze dry.
c. Wash the rest of the mask with a very mild solution of soap and water.
d. Rinse the mask thoroughly to remove all traces of soap.
e. Make sure the sides of the breathing bag do not stick together while drying, as this may decrease the life of the rubber in the bag. The mask can be sterilized with a solution of 70 percent ethyl alcohol.

14-14. REMOVAL OF OXYGEN CYLINDER, REGULATOR AND COMPENSATOR. (Refer to Figures 14-1 and 14-2.) The oxygen cylinder on the PA-31T and PA-31T1 is located in the left side of the nose section below the radio shelf and on the PA-31T2 it is located in the nose baggage compartment on the aft bulkhead. The following steps should be used to remove the cylinder and regulator from the airplane:

a. Gain access to the oxygen cylinder.
b. Remove the radio equipment and radio shelf. (PA-31T and PA-31T1.)

CAUTION

Insure that the valve on the cylinder is closed before disconnecting any lines from the regulator, and observe all safety precautions related to oxygen system handling and servicing.

c. Remove the access cover from the shroud assembly. (PA-31T and PA-31T1.)
d. Disconnect the control cable and pressure lines from the regulator, and also disconnect the restraining cable.
e. Support the cylinder and loosen and separate the clamps that hold the cylinder in place.
f. Remove the cylinder from the airplane through the access opening at the nose section. Use caution not to bump the neck of the cylinder, regulator and compensator (if installed). The regulator and compensator (if installed) can be removed from the cylinder at this time if the cylinder is completely discharged of all pressure.

14-15. INSTALLATION OF OXYGEN CYLINDER, REGULATOR AND COMPENSATOR. (Refer to Figures 14-1 and 14-2.)

a. With the regulator and compensator (if installed) attached to the cylinder, place it into the airplane through the access opening with the regulator and compensator (if installed) to the front of the airplane. Be careful not to bump the regulator and compensator when installing them.
b. Position the cylinder so the control on the regulator aligns with the control cable.
c. Secure the cylinder in place by connecting and tightening the two clamps.
d. Connect the pressure lines and control cable to the regulator and also connect the restraining cable.
e. Install the access cover on top of the shroud assembly. (PA-31T and PA-31T1.)
f. Replace the radio shelf and install or connect the radio equipment. (PA-31T and PA-31T1.)
g. Replace the access panel over the nose section and secure it. (PA-31T and PA-31T1.)
h. Recharge the oxygen cylinder (refer to Filling Oxygen Cylinder, Section II), if not already accomplished.

CAUTION

Ascertain that the cylinder is empty before removing regulator.

14-16. REMOVAL OF FILLER VALVE.

a. Remove the access panel on the left side of the nose section.
b. Ascertain that the valve on the regulator is closed.
c. Disconnect the tee fitting from the filler valve.
d. Remove the three nuts and bolts holding the filler valve in place and remove the valve through the access door on the outside of the fuselage, below the valve.

14-17. INSTALLATION OF FILLER VALVE.

a. Place the valve into position through the access door and secure with three bolts and nuts.
b. Connect the tee fitting to the valve using thread sealant and instructions given in Paragraph 14-8.
c. Replace the access panel on the side of the nose section.

14-18. REMOVAL OF PRESSURE GAUGE. Ascertain that the control valve is closed and there is no pressure in the system.

a. Disconnect the line from the back of the pressure gauge.
b. Loosen and remove the retainer nut and clamp holding the gauge in place.
c. Pull the gauge out from the front of the panel.

14-19. INSTALLATION OF PRESSURE GAUGE.

a. Place the gauge into the panel from the front and replace the clamp and retainer nut on the back of the gauge. Be sure the gauge is positioned properly before tightening the clamp.
b. Reconnect the line at the rear of the gauge.

TABLE XIV-II. TROUBLESHOOTING CHART (OXYGEN SYSTEM)

Trouble	Cause	Remedy
No indication of pressure on pressure gauge.	Cylinder empty or leak in system has exhausted pressure.	Charge system and check for leaks.
	Pressure gauge defective.	Replace pressure gauge.
	Defective regulator.	Replace regulator.
Pressure indication normal but no oxygen flowing.	Oxygen cylinder regulator assembly defective.	Replace regulator assembly.
	Control out of adjustment.	Adjust control.
Offensive odors in oxygen.	Cylinder pressure below 50 psi. Foreign matter has entered the system during previous servicing.	Purge the oxygen system. Refer to Paragraph 14-12.

14-19a. REMOVAL OF OVERPRESSURE DISCHARGE DISC (VISUAL). (Refer to Figure 14-2.) The green overpressure disc is located on the lower left section of the nose section at sta. 24.06 and can be removed per the following instructions:

a. Remove snap ring holding overpressure disc in place and remove disc or any remaining pieces if disc was blown out.

b. Check frame and dump outlet for damage if disc was blown out and repair as required.

c. Flush/purge if required.

NOTE

If cylinder safety disc has ruptured, remove cylinder per Paragraph 14-14 and return cylinder and valve assembly to qualified overhaul depot.

14-19b. INSTALLATION OF OVERPRESSURE DISCHARGE DISC (VISUAL). (Refer to Figure 14-2.)

a. Insure dump outlet is clean.

b. Insert overpressure disc into frame.

c. Install snap ring.

d. Install cylinder per Paragraph 14-15 if cylinder was removed.

THIS SPACE INTENTIONALLY LEFT BLANK

14-20. PROPELLER AND ENGINE AIR INLET LIP DEICING SYSTEM.

14-21. DESCRIPTION AND PRINCIPLES OF OPERATION. (Refer to Figure 14-3.) The Propeller and Lip Deicer System is made up of two individual systems, one for each engine, linked together only by an ammeter (4). The ammeter has a selector switch enabling it to monitor the operation of either the left or right system.

Each system consists of an electrically heated boot (9) bonded to each propeller blade and to the lip of the engine air intake duct, a slip ring, and brush block assembly to transfer electrical power to the rotating deicers on the propellers, a timer (7) to control the cycling of the system, a shunt (5) which connects to the single ammeter that monitors system operation, three circuit breakers (8) to protect the system and related wiring harnesses, and a switch (1) to control system operation.

The control switch performs two functions: it operates two relays, a motor control relay and a power control relay. It also reverses the field voltage for the motor that operates the mechanism that extends and retracts the ice deflection flap and bypass door. (Refer to Section VIII or Section VIIIA.)

To conserve electrical power which is drawn from the aircraft electrical system, the current is cycled to the deicer heaters at timed intervals rather than continuously. Each propeller blade deicer boot has two separate heaters; one for the outer half and one for the inner half. By heating the outer or inner heaters on only one propeller at a time, rotational balance is held during deicing. Current is drawn from the airplane electrical system through the switch that is selected, connecting the ammeter and timer for that system. When the switch is activated the timer delivers current continuously to the Parting Strip portion of the lip deicer and successively to the Shedding Area I (phase 1), and Shedding Area II (phase 2) portions of the lip deicer. Current is also delivered successively, via the slip ring and brush block arrangement to the outer heaters on the propeller blades (phase 3), and then the inner heaters on the propeller blades (phase 4). The timer energizes each of these four phases in turn for about 34 seconds, and thus the system continues to cycle as long as the control switch is on.

The propeller deicer cycling sequence given is vital so that outboard heaters on each blade operate before the inboard heaters. See cycle sequence. (Refer to Figures 14-4 through 14-7.)The system may be used continuously in flight if needed.

NOTE

Heating may begin at any phase in the cycle depending on the timer position when the switch was turned off from previous use.

a. Deicers: The deicers contain special heater wires protected by fabric plies and by oil and abrasion-resistant rubber. The side of the boot cemented to the mounting surface has a dull finish whereas the air side finish is "glossy." Each boot has a separate lead for the individual heating elements and an extra lead which is a common ground. These leads are so marked. An unmarked ground can be identified by using an ohmmeter across all the possible pairs of leads. One pair will show twice the resistance of the other pairs. The latter are the "hot" leads and the lead excluded from the pair that shows twice the resistance of the other pairs is the ground lead. All deicers used on this airplane must be of the new design, which includes a gray plastic patch where boot and strap join.

b. Slip Rings, Brushes and Brush Blocks: To transfer electrical power to the rotating deicers, a brush block assembly is mounted on a bracket at the front of the engine and has brushes which are spring-loaded to press against the revolving slip rings. The slip ring assembly is mounted on the backside of the rear spinner bulkhead.

c. Timers: Each timer is a sealed unit located on a shelf in the nose section of the airplane. If a timer is found inoperative, it must be replaced as an assembly. No field repairs are authorized. For timer function, refer to Paragraph 14-53.

d. Ammeter: The ammeter is designed for the monitoring of each system, and it is, therefore, important that the correct replacement part number be used if replacement should be required. In the event of low aircraft battery voltage (very possible in ground checks), the ammeter readings will be lower than at full voltage. Provided the ammeter needle reads in the shaded range on the scale (full aircraft voltage), current flow is considered as normal.

e. Switches: The switches for each system are mounted in the overhead switch panel.

f. Circuit Breakers: The circuit breakers are mounted in the circuit protector panel; one in the panel on the left side of the cockpit and one in the panel on the right side.

14-22. DEICER SYSTEM OPERATIONAL CHECK.

a. Chock wheels and operate the engine at near takeoff power.

b. Turn deicer system switch ON for the side being checked and activate the Ground Test Switch.

c. With the ammeter selector switch in the proper position, observe the ammeter for at least two minutes.

d. The ammeter needle must "flicker" approximately every 34 seconds as the step switch of the timer operates. The needle must also be in the green arc during all four phases of the cycle.

e. With engine stopped, remove top engine cowl and unplug the lip deicer boot at the plug and at the ground lead disconnect.

f. With auxiliary power plugged in and deicer switch ON, check for proper operation of the ice deflector door, located beneath the air inlet screen, by observing back through the air inlet and down around each side of the engine. Also check operation of the bypass door located on the underside of the bottom engine cowl at the rear of the engine. (Refer to Section VIII or Section VIIIA.)

g. Have an assistant activate the Ground Test Switch and feel the propeller deicer boots for proper sequence and operation. The starting point is not important, but the sequence is vital and must be: outboard elements; then inboard elements in that order.

NOTE

The ammeter will not read through two phases of the two minute cycle and will read slightly lower than what was observed with the engine running during the two prop deicer phases due to the lip deicer being inoperative.

CAUTION

Due to the Parting Strip element being on continuously and the suddenness and heat intensity of the lip deicer elements, the boot must be observed closely while testing it, for signs of overheating, or the boot could be destroyed.

h. There are two ways of checking the operation of the lip deicer safely:

1. Obtain a 28 VDC power source that is capable of supplying 16 amps. Connect the negative lead to the ground lead of the deicer and touch the positive lead individually to the three terminals of the plug from the deicer.

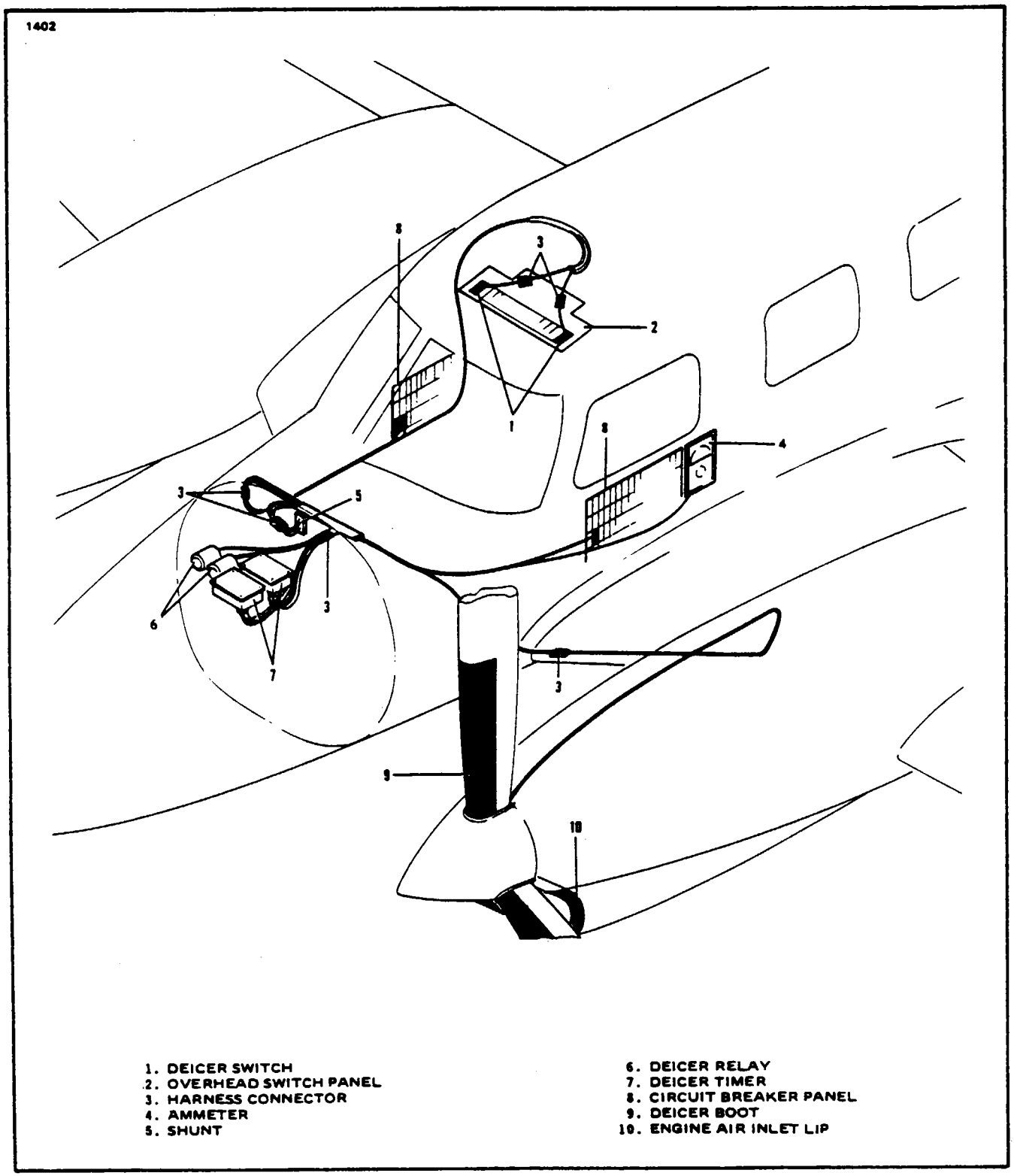

Figure 14-3. Propeller and Engine Air Inlet Lip Deicer System

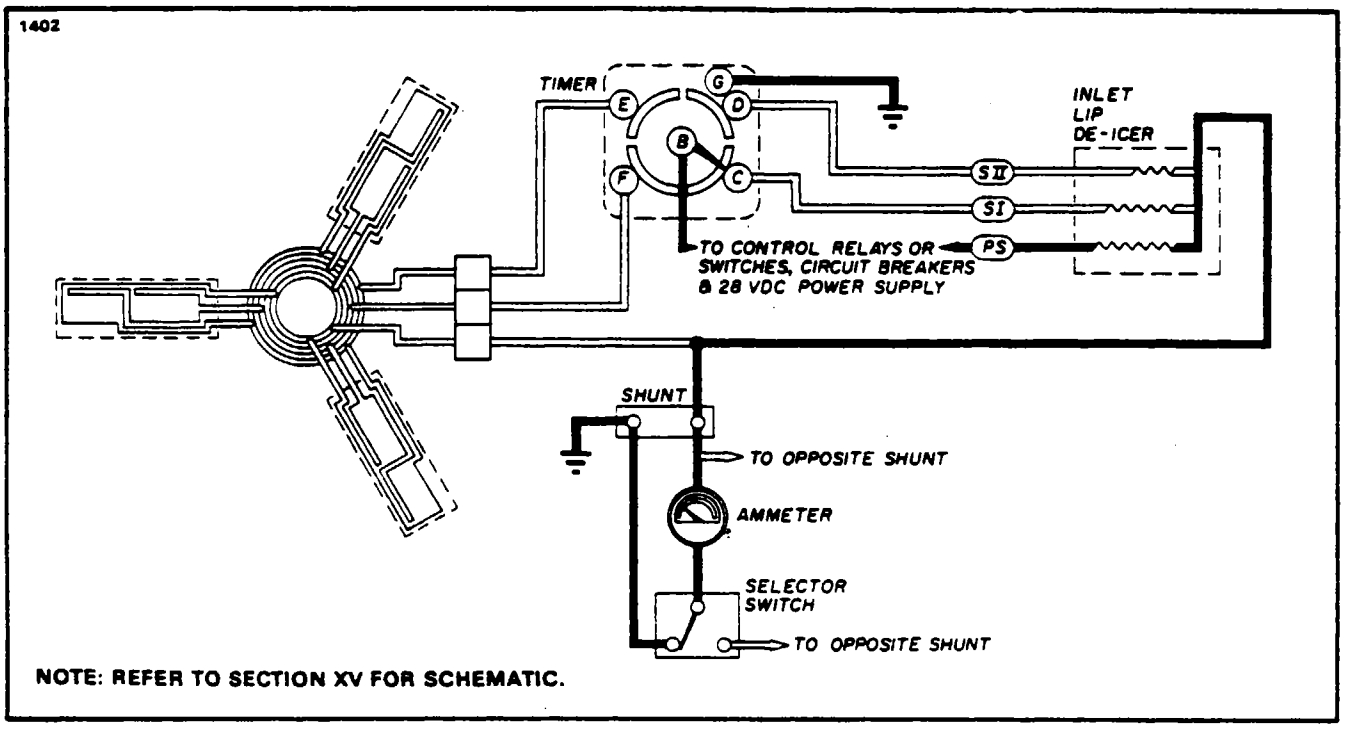

Figure 14-4. Electrical Diagram Showing Cycle Sequence

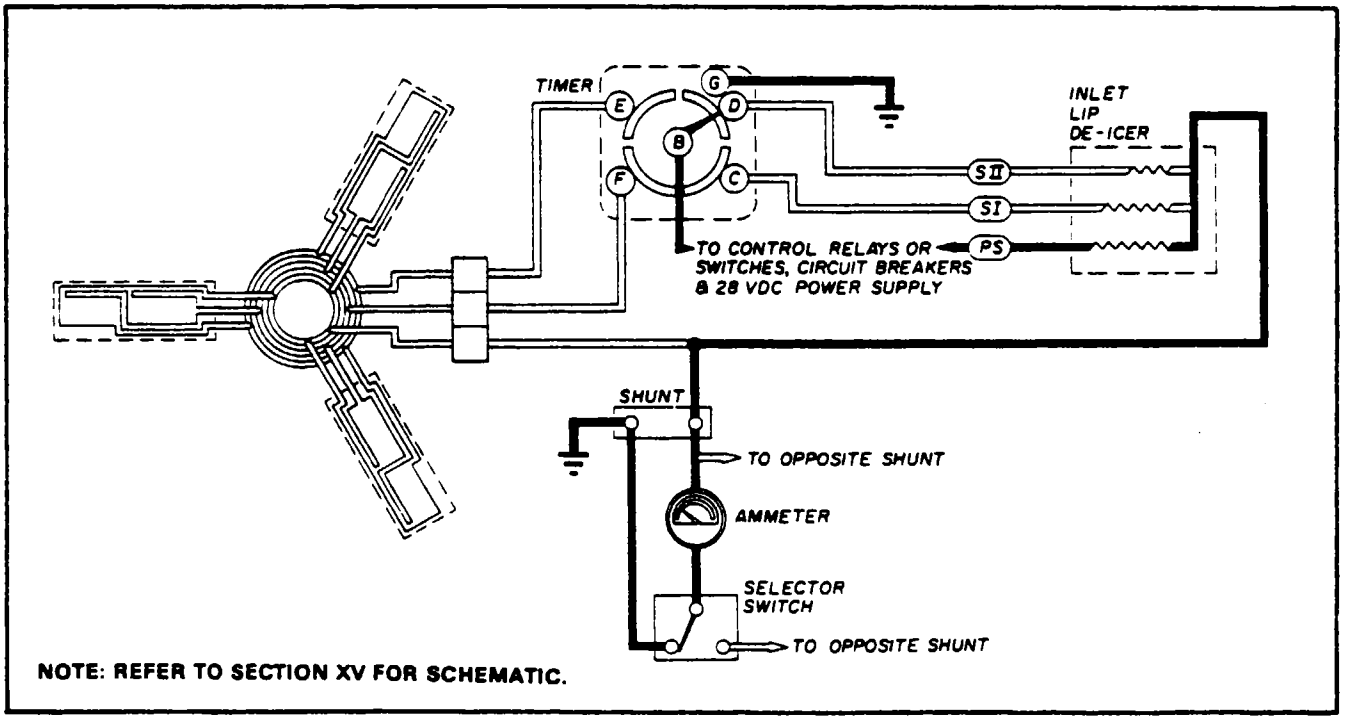

Figure 14-5. Electrical Diagram Showing Cycle Sequence

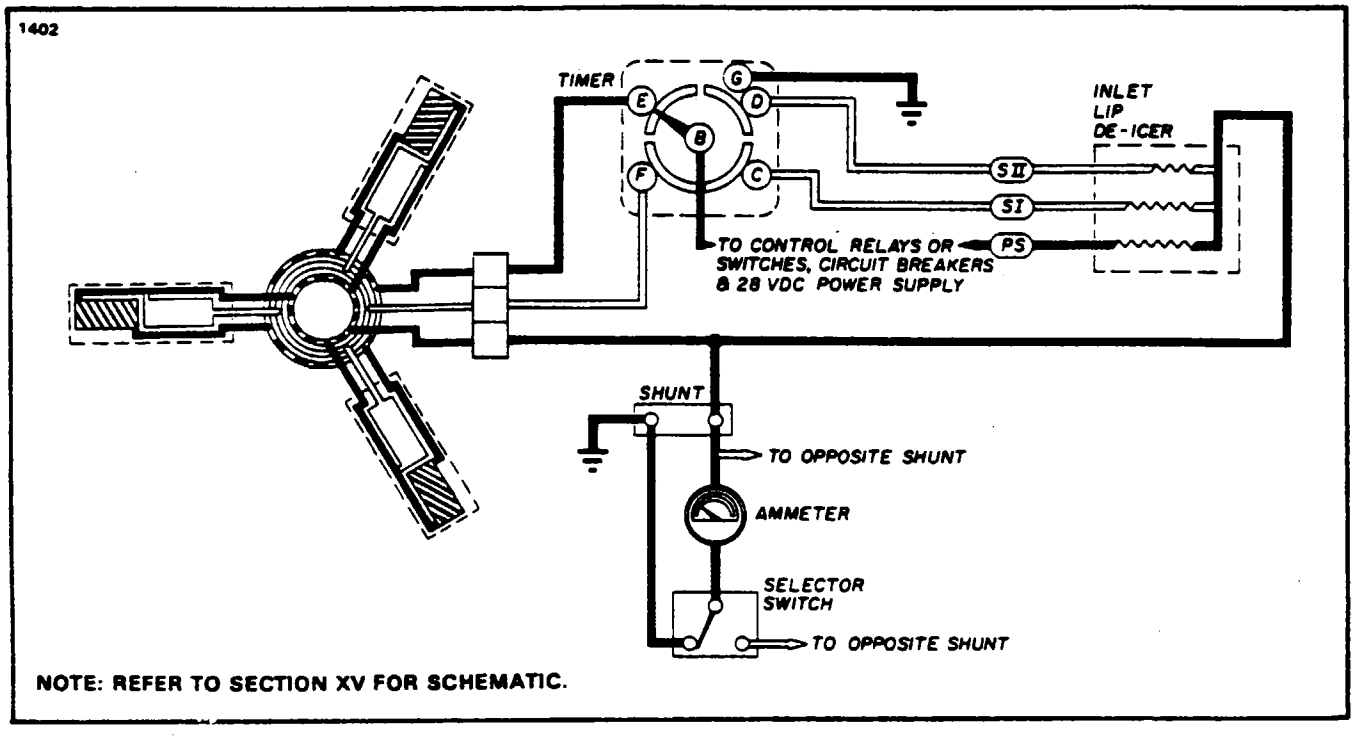

Figure 14-6. Electrical Diagram Showing Cycle Sequence

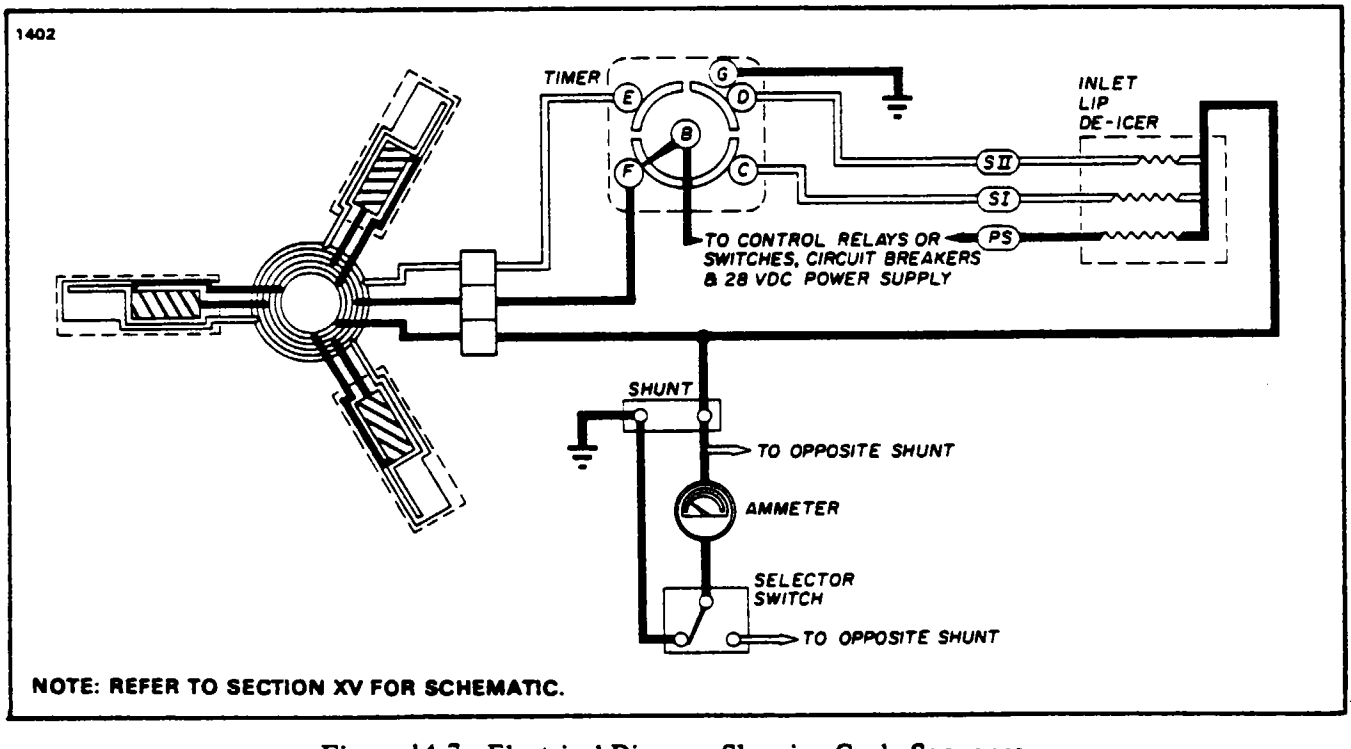

Figure 14-7. Electrical Diagram Showing Cycle Sequence

2. This method requires connecting the deicer ground wire at the quick-disconnect terminal, and one person in the cockpit with Master and Deicer Switches ON and the Ground Test Switch activated while a second person simply connects the deicer plug to the mating plug, supplying system power, long enough to make the check stated in Step i of this paragraph; then disconnecting plug and waiting for the second lip deicer phase to begin.

NOTE

The timer will only operate as long as the Ground Test Switch is activated, thus the latter method may be used to check for proper system cycling by referring to Figures 14-4 through 14-7 and provided the following WARNING is observed.

WARNING

Maintain the connection only as long as necessary to meet the particulars stated in Step i of this paragraph and by no means long enough that the deicer becomes too hot to touch.

i. The temperature rise of the boots should be noticeable and if local hot spots are apparent, the boot is damaged and must be replaced unless surface damage is evident. Surface damage, if not extensive, may be repaired in a similar manner as that stated in Paragraph 14-41.

14-23. TROUBLESHOOTING. Troubles peculiar to the deicing system are listed in Table XIV-VI at the end of these instructions, along with their probable causes and suggested remedies.

14-24. USING THE AMMETER. Whether in flight or during ground testing, the ammeter can be used to indicate the general nature of most electrical problems. The troubleshooting chart is primarily based on this use of the ammeter and assumes that the user does understand all normal operating modes of the system as given in Principles of Operation, Paragraph 14-21.

NOTE

When troubleshooting, first use the "ammeter test" and "heat test" to determine which circuits are involved. Use circuit diagram for assistance to check voltages or continuity.

14-25. HELPFUL TIPS.

a. If the ammeter reading drops to one-third normal current, this indicates that one heater circuit is open.

b. Excess current reading on the ammeter always indicates a power lead is shorted to ground. Thus, when trouble of this nature is found, it is vital that the grounded power lead be located and corrected.

c. A considerable number of timers that have been returned for repair, proved to be fully workable when tested. Accomplish the test described in Paragraph 14-53 before concluding that the timer is defective.

14-26. INSPECTION.

14-27. 50-HOUR INSPECTION.

a. Perform entire procedure for each engine as stated in Paragraph 14-22.

b. Remove spinner dome and upper engine cowl. With assistant observing deicer ammeter and with deicer switch ON and Ground Test Switch activated, flex all accessible wiring - particularly the deicer lead straps, leads from the slip ring assembly, and the fire wall electrical connectors and their wiring. Any movement of the ammeter needle other than the "34 second flicker" of cycling, indicates a short or break that must be located and corrected. Perform this test for both left and right systems.

14-28. 100-HOUR INSPECTION.

a. Remove cowling in accordance with Removal of Engine Cowling, Section VIII or Section VIIIA.)

b. Conduct 50-hour inspection.

c. Check for radio noise or radio compass interference by operating each engine at near takeoff power and with radio gear ON while turning each device switch ON and OFF. If noise or interference occurs with deicer switch ON and disappears when switch is OFF, see troubleshooting chart.

d. Ascertain that all clamps, clips, mountings, and electrical connections are tight. Check for loose, broken, or missing safety wire.

e. Deicer Boots: Closely check the boots for wrinkled, loose, or torn areas particularly around the ends of the boots and where the propeller boot strap passes under the strap retainer. Look for abrasions or cuts, especially along the leading edges and the flat or thrust face of the propeller boots. If heater wires are exposed in damaged areas or if rubber is found to be tacky, swollen or deteriorated (as from oil or solvent contact), replace the damaged deicer in accordance with Paragraphs 14-42 to 14-47.

NOTE

Look for cracks or other damage. Operate propeller from "full pitch" to "feathering" and check that deicer lead harnesses do not come under tension or are pinched by propeller blade. (Refer to Figure 14-22 or 14-23.)

f. Slip Rings: Check slip rings for gouges, roughened surface, cracks, burned or discolored areas, and for deposits of oil, grease or dirt.

1. Clean greasy or contaminated slip rings with CRC 2-26 solvent. (This solvent is available from CRC Chemical Division, Webb Inc., CJ10 Limekiln Pike, Dresher, Pa. 19025.

2. If uneven wear is found or if wobble is noticed, set up dial indicator as shown in Figure 14-8 to check alignment of slip rings to propeller shaft.

g. Brush Block - Brushes: Examine mounting brackets and housing for cracks, deformation or other physical damage.

1. Test that each brush rides fully on its slip ring over 360°. Figure 14-9 shows wear pattern if this condition is not corrected. If alignment is off, shim where brush block attaches to mounting bracket. The shim is a series of laminates and may be peeled for proper alignment of brushes to slip rings. If old shim is not thick enough, a new one must be installed.

2. Check for proper clearance of brush block to slip rings as shown in Figure 14-11. If not correct, loosen mounting screws and move in elongated holes to correct block position before tightening securely.

3. Check brushes for wear limitation. (Refer to Paragraph 14-30 and Figure 14-10.)

4. Visually check brush block for approximately 2° angle of attack. (Refer to Figure 14-11.) If not, loosen mounting screws and twist block but be sure to hold clearance limits shown when tightening.

h. System Wiring: With deicer systems operating, have assistant observe ammeter while visually inspecting and physically flexing wiring from brush blocks through fire wall, to timer, to ammeter, to switch and to aircraft power supply. The ammeter will flicker as the timer switches approximately every 34 seconds in the cycle. Jumps or flickers at other times indicates loose or broken wiring in the area under examination at that moment. In such cases, check continuity through affected harness, while flexing and prodding each wire in the area that gave initial indication of trouble. Use the wiring diagram in Section XV to trace circuitry. Perform the same test on the engine inlet lip deicers with the system switches on, and the assistant pressing the Ground Test Switch.

CAUTION

Do not hold the switch on for any length of time as an overheating condition may result.

THIS SPACE INTENTIONALLY LEFT BLANK

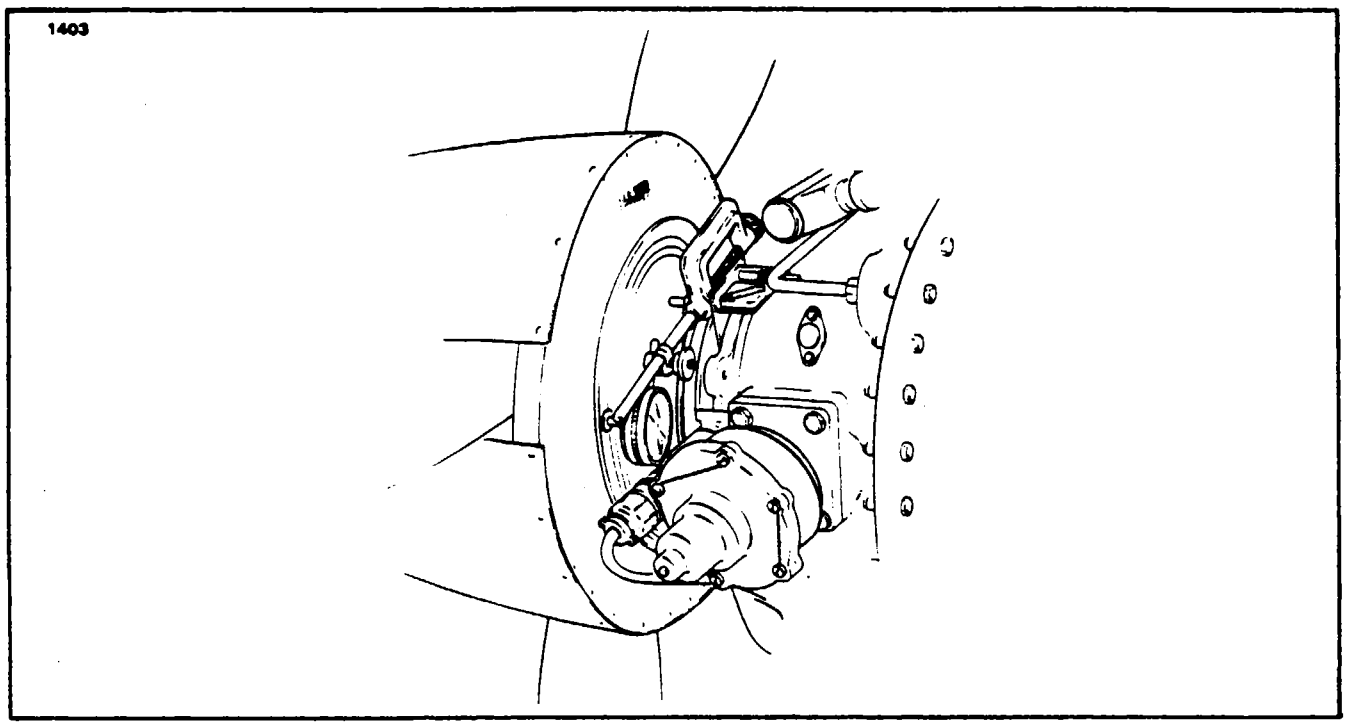

Figure 14-8. Suggested Use of Dial Indicator

14-29. REPAIR PROCEDURE FOR INDIVIDUAL COMPONENTS.

14-30. CHECKING FOR BRUSH WEAR. Insert small diameter wire through hole in rear of brush retainer assembly. (Refer to Figure 14-10.) Replace brushes if the length of the inserted portion of wire measures more than 1.625 inches.

14-31. REPLACEMENT OF BRUSHES.

a. Disconnect leads from terminals on brush retainer assembly.
b. Remove brush retainer assembly from mounting bracket by removing attaching screws.
c. Separate brush retainer assembly by the following procedure: (Refer to Figure 14-10.)
   1. Remove terminal block by removing the four attaching screws.
   2. Move the guide block laterally to disengage the dowl pins from retainer block.
   3. Heat terminal stud to melt solder in order to remove brush leads from stud.
d. Reassemble brush retainer assembly by the following procedure:
   1. Install insulation on "A" & "B" brush leads.
   2. Solder brush leads to terminal stud.

NOTE

New springs should always be used when replacing brushes.

3. Position brushes and spring into guide block and engage the guide block onto the dowl pins on the retainer block.

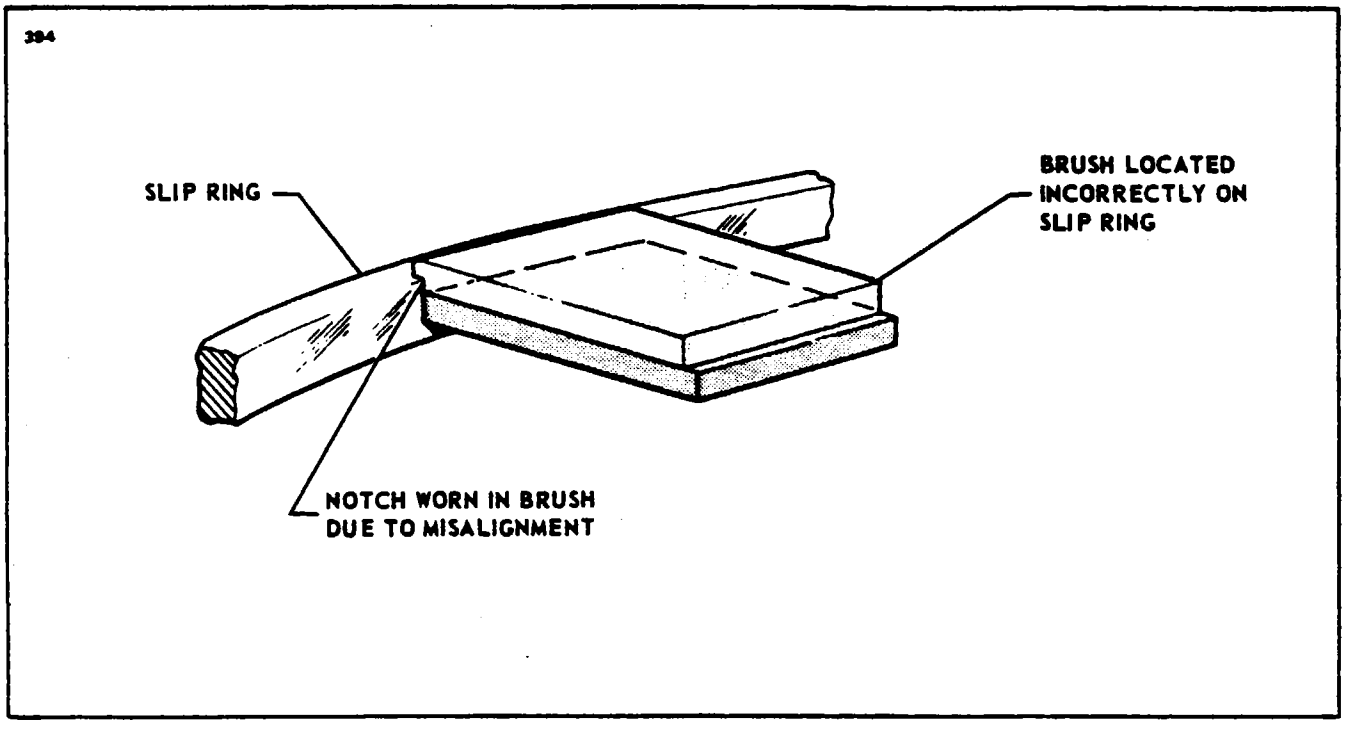

Figure 14-9. Centering of Brushes on Slip Rings

4. Position terminal block on brush retainer assemble with four attaching screws.

e. Position brush retainer assembly on mounting bracket and secure with attaching screws.

CAUTION

Side loads on brushes should be avoided to prevent brush damage.

f. Attach electrical lead to terminal studs making certain the lead is connected to proper stud.

g. Check for free movement of brushes by pushing the brushes back into the block and allowing the spring pressure to return them. DO NOT SNAP. If free movement is impaired, correct the restriction and recheck.

h. Reinstall the brush block to the mounting bracket utilizing the hardware removed in Paragraph 14-31, b.

NOTE

New deicer brushes must be run in a minimum of two hours of engine operation prior to energizing the deicer boots. Brushes should be checked for proper seating and alignment after the run in period.

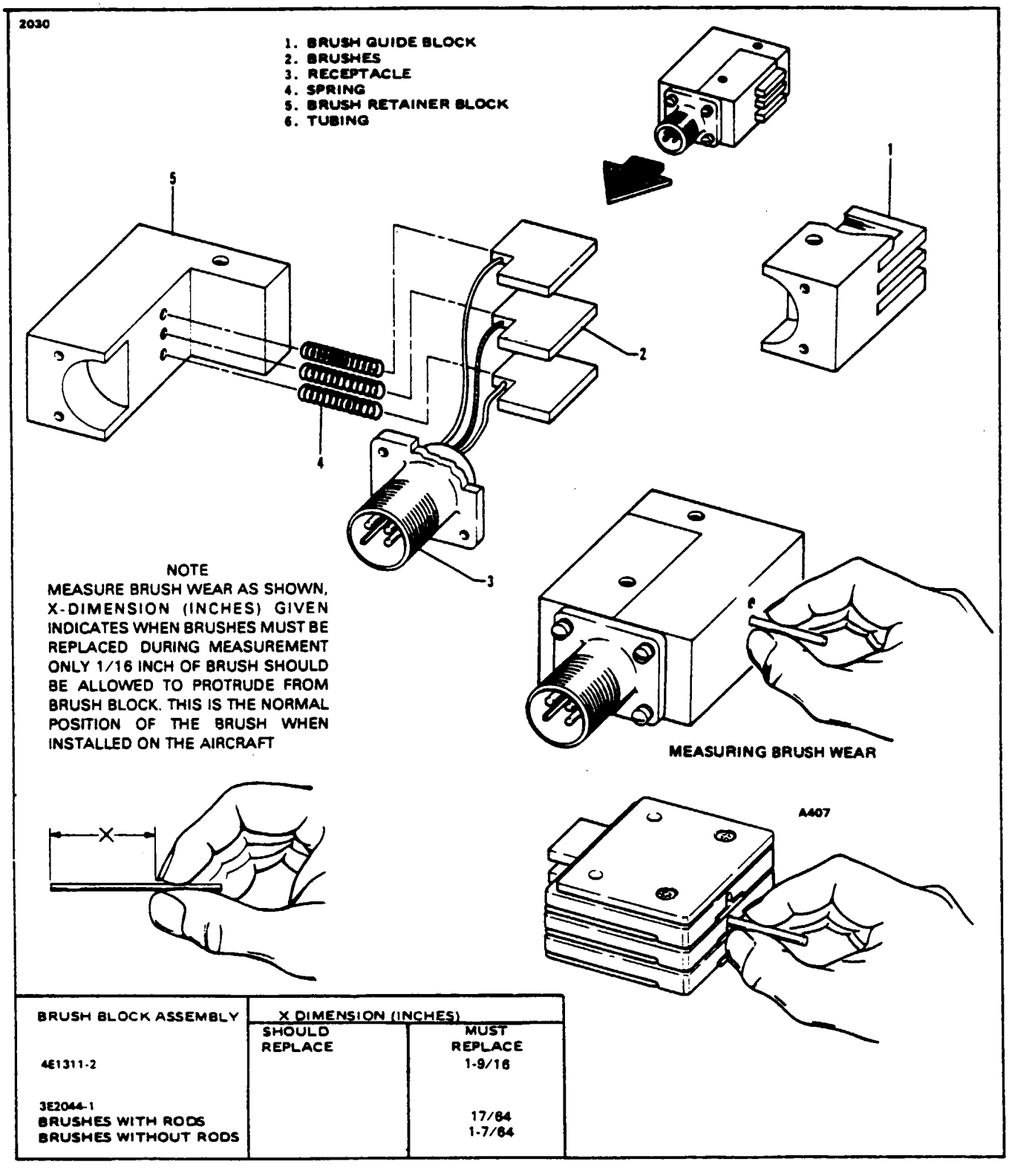

BRUSH BLOCK ASSEMBLY	X DIMENSION (INCHES)	
	SHOULD REPLACE	MUST REPLACE
4E1311-2		1-9/16
3E2044-1		
BRUSHES WITH RODS		17/64
BRUSHES WITHOUT RODS		1-7/64

Figure 14-10. Brush Block Assembly

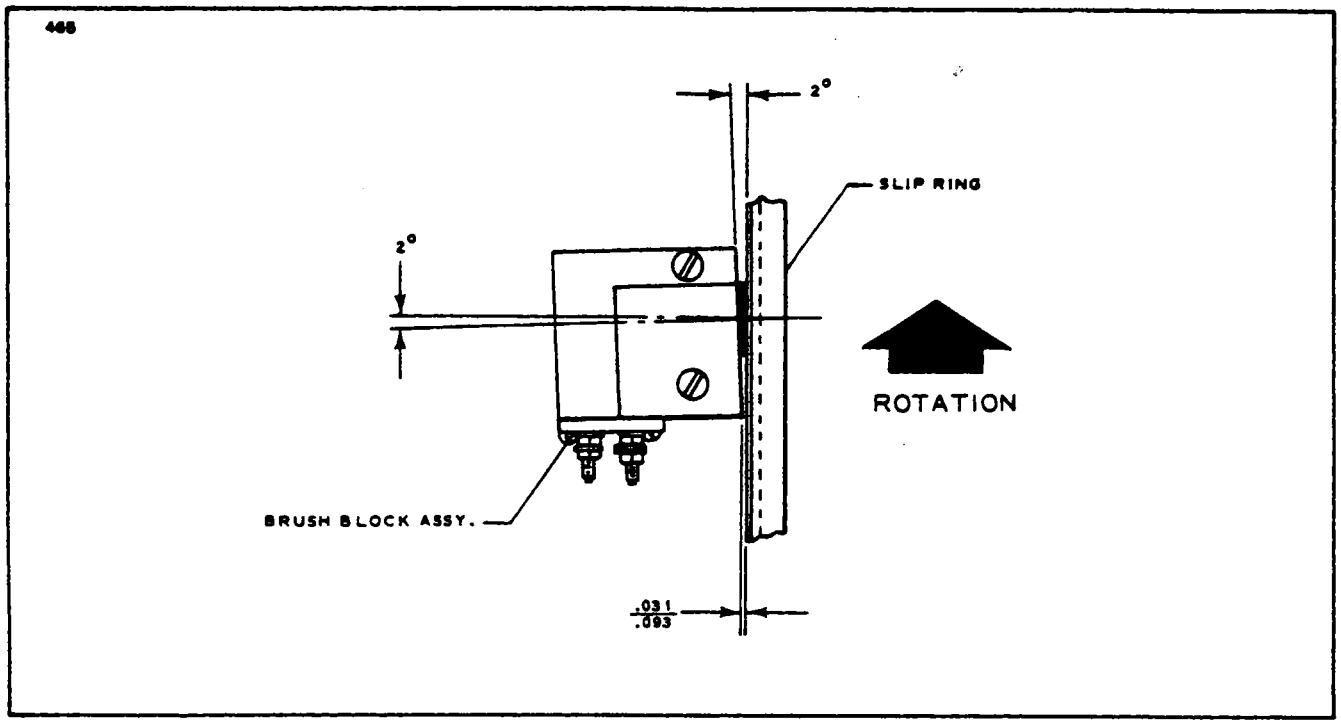

Figure 14-11. Angle of Contact - Brushes to Slip Rings

14-32. ALIGNMENT OF NEW BRUSHES. Any time the brush block assembly is dismounted, the alignment at reinstallation must be checked as described in Paragraph 14-28, g and Figure 14-11.

NOTE

New deicer brushes must be run in a minimum of two hours of engine operation prior to energizing the deicer boots. Brushes should be checked for proper seating and alignment after the run in period.

14-33. SLIP RINGS.

14-34. MACHINING OF THE SLIP RING. Slip rings with roughened or damaged surfaces can be machined to give prolonged service life. With slip ring assembly removed from propeller hub, mount in lathe not to exceed 0.002 run-out over 360 degree rotation with respect to the mounting surface of the slip ring assembly.

Take a light cut for smooth finish and cut no deeper than required to remove surface damage. Contact surfaces of the three slip rings must be parallel within 0.005 inch and flat within 0.005 inch overall - deviation from flat not to exceed 0.002 inch over a 4 inch arc. If necessary, undercut insulation between slip rings to a depth of 0.020 to 0.030 inches below the contact surface of the slip rings. The minimum dimension for re-facing slip ring assemblies should not be less than 1.160 inch between the copper slip ring surfaces and the legs of the slip ring assembly.

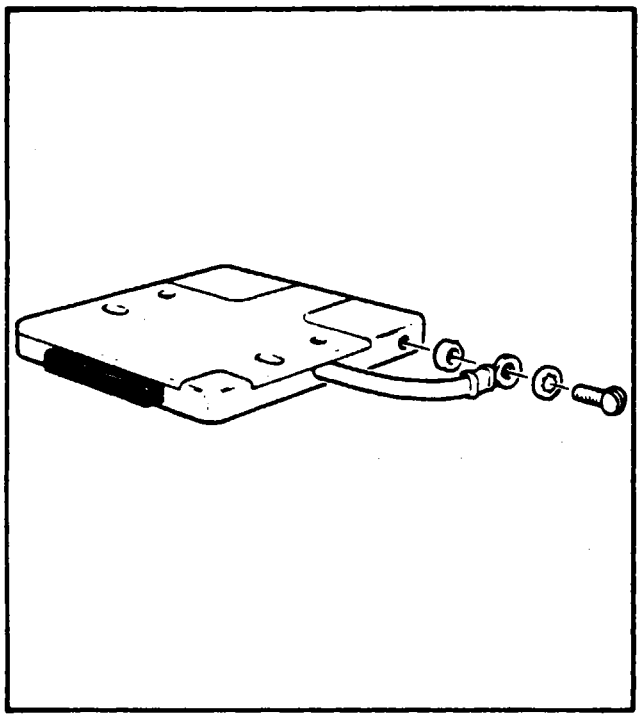

Figure 14-12. Brush Module Assembly (3E2011)

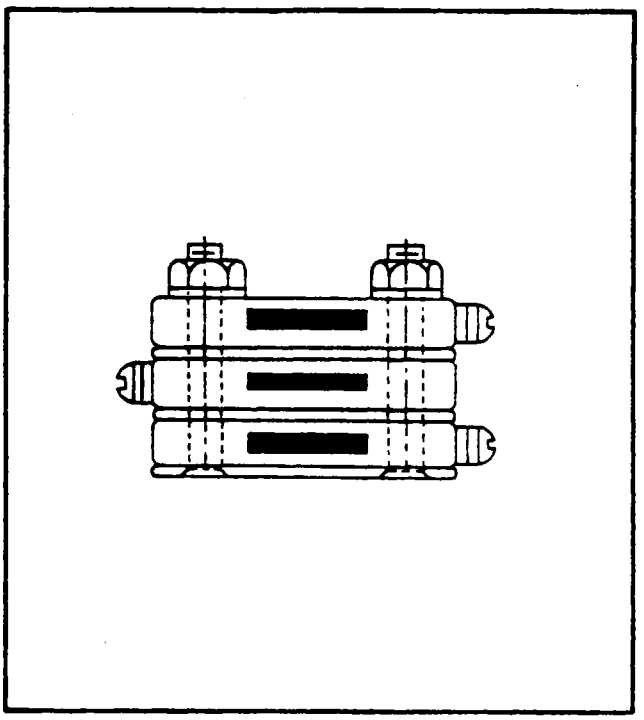

Figure 14-13. Alternate Module Stacking Arrangement

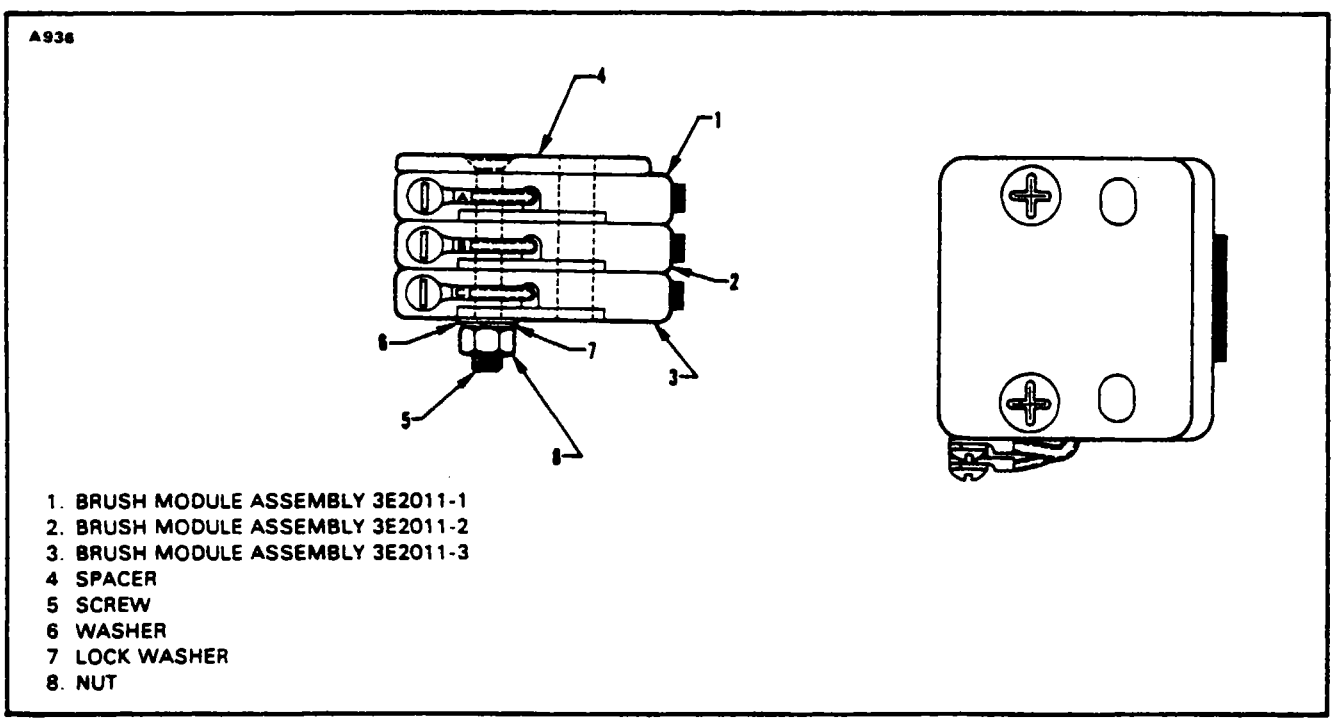

Figure 14-14. Modular Brush Assembly (3E2044-1)

NOTE

If in machining, the solder or braze connection on the underside of the slip ring is exposed, replacement of the slip ring assembly will be necessary.

14-35. REPLACEMENT OF SLIP RINGS. Slip ring assemblies that are open or shorted electrically, cracked or damaged structurally, or which have damaged surfaces beyond the scope of minor repair to clean up, should be replaced with a new slip ring assembly.

14-36. REPLACEMENT OF BRUSH BLOCK WITH MODULAR BRUSH ASSEMBLIES. Modular brush block assembly, P/N 3E2044-1, is a direct replacement for brush block assembly, P/N 4E1311-2. Instructions concerning replacement of brush block assemblies with modular brush assemblies are given in the latest revision of B. F. Goodrich Service Bulletin E-77-54.

14-37. BRUSH MODULE REPLACEMENT. Brush modules should be replaced when .375 inch of brush material remains; brush modules must be replaced when .250 inch remains. Measure the brushes as shown in Figure 14-10. Replace brush modules as follows:

NOTE

Brushes are not offered individually as replacements. When a brush wears out, the module containing it should be replaced.

a. Remove the modular brush assembly from the aircraft by removing the attachment hardware, and disconnect the engine wire harness.

b. Remove assembly screws and separate modules and spacers.

NOTE

The part number of each module is etched into the surface of the plastic housing; replace with the same part number module.

c. Restack modules and spacers as shown in Figure 14-14. If there is interference between adjacent ring terminals, re-orient center module as shown in Figure 14-13.

NOTE

Ascertain flat washer is positioned between star washer and housing.

d. Reconnect aircraft wire harness and insure adjacent ring terminals are not touching.

e. Install assembly on aircraft and check adjustment.

TABLE XIV-III. POWER REQUIREMENT FOR 28-VOLT D.C. SYSTEM

LEFT OR RIGHT PROP AND INLET LIP DEICER CIRCUIT						
TIMER SEQUENCE	ELEMENT HEATED	CYCLE TIME	CYCLE LOAD (AMPS)			
-	PARTING STRIP (LIP)	CONTINUOUS	13.2	13.8	12.3	12.3
C	SHEDDING AREA I (LIP)	34	13.1	-	-	-
D	SHEDDING AREA II (LIP)	34	-	12.17	-	-
E	OUTBOARD PROP	34	-	-	13.7	-
F	INBOARD PROP	34	-	-	-	13.7
TOTAL CYCLE TIME: 2.2 minutes		MAX LOAD: 26 amps			MIN LOAD: 22 amps	

B.F. GOODRICH 7E1240 G.

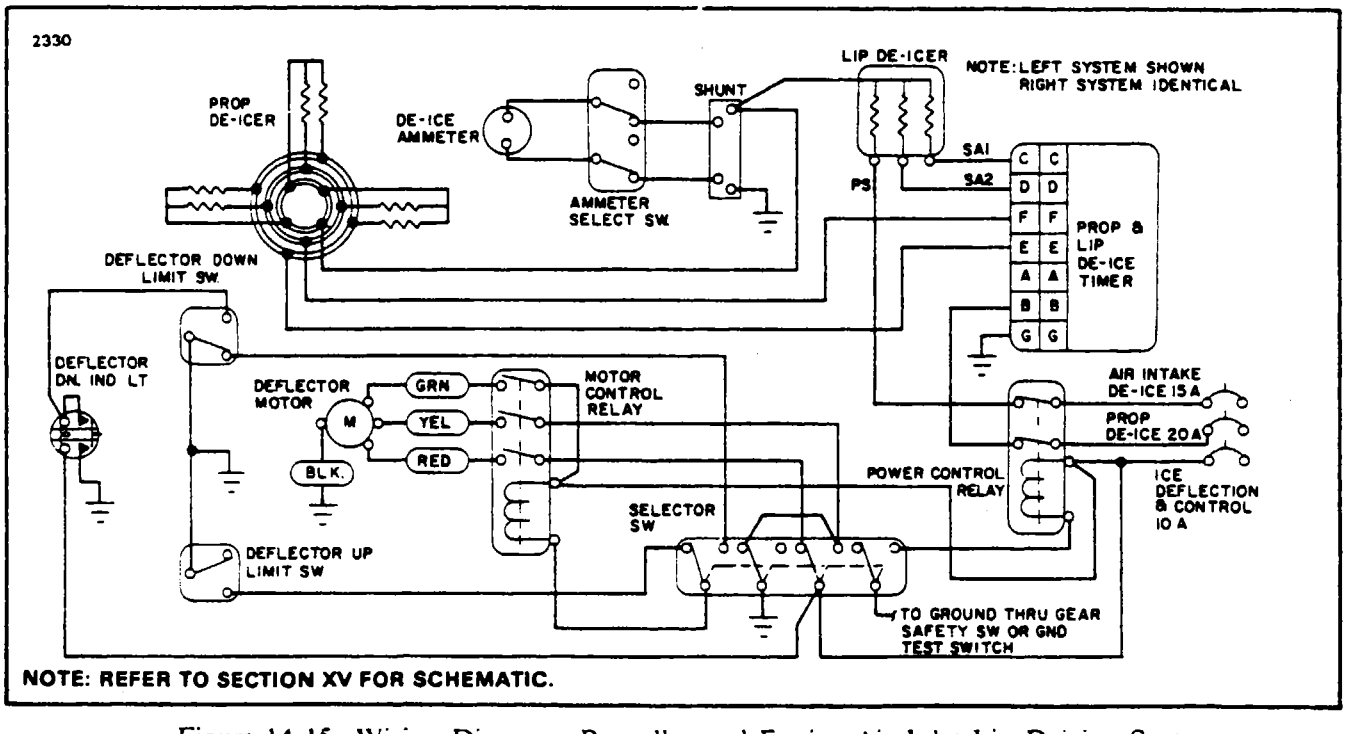

Figure 14-15. Wiring Diagram, Propeller and Engine Air Inlet Lip Deicing System

14-38. DEICER BOOTS.

14-39. RESISTANCE CHECK OF DEICER BOOTS. To determine incorrect resistance, short or break the circuit at the brush-to-slip ring contact; disconnect harness at each timer and use ohmmeter to read resistance from each deicer circuit lead (Pins B, C, D, E, F of harness plug) to ground.

14-40. REPLACEMENT. If tests show the deicer boots to have an open circuit, to be the wrong resistance or to be visibly damaged beyond repair as outlined in Paragraph 14-28 of this section, replace the deicer boot as directed in Paragraphs 14-42 thru 14-51.

14-41. REPAIR OF PROPELLER DEICER LEAD STRAP. Use B.F. Goodrich Field Repair Kit No. 77-802 which contains rubber patch material sufficient for several repair jobs. Cements and solvents specified in these directions are not included in the kit. (The abbreviation "MEK" in further steps stands for Methyl-ethylketone.) The following steps apply wherever "cementing" is specified in the text:

a. Clean the area to be bonded or patched with MEK or acetone to remove all grease and dirt. It is vital that surface be clean for good cementing job. After last wipe with cleaner, quickly wipe surface with a clean, dry lint-free cloth to remove solvent film.

b. Apply one even coat of EC1300L or EC1403 cement (Minnesota Mining and Mfg. Co.) to area to be bonded or patched and allow to dry (approximately one hour above 40° F). Apply second even coat of EC1300L or EC1403 cement and allow to dry.

c. Cut the patch (.020 thick rubber to about 1/4 inch large on all sides of the damaged area). The protective paper is on the side to be cemented. Apply masking tape on the open side to prevent the patch from curling as cement dries; then strip off protective paper and apply EC1300L or EC1403 cement in a smooth even coat. Allow to air dry. After one hour, apply second coat and allow to air dry.

d. With cement surfaces either dry or with just a trace of "tackiness," apply light coat of MEK or Toluol over these surfaces to "re-tackify" and quickly complete the cementing job as directed. Allow one hour to air dry before peeling off the masking tape or mylar coating on the air side. Rub edges and center of patch to see that it is holding before releasing for flight. (Approximately 24 hours.)

NOTE

Do not touch cemented surface with dirty or oily fingers.

14-42. REMOVAL OF DEICERS.

a. Release the deicer terminal clamp assembly by removing the safety wired mounting screws. Disconnect the deicer wiring harness and deicer leads from the terminal clamp.

b. Use MEK or Toluol to soften the adhesion line between the boot and the mounting surface.

c. Starting at one corner of the deicer, loosen enough of the deicer to grasp in the jaws of vise grip pliers or similar tool.

d. Apply a steady pull on the deicer to pull it off the mounting surface. Continue using MEK or Toluol to soften the adhesion lines. Unless the deicer being removed is damaged and is to be scrapped, cushion the jaws of any pulling tool used, to prevent damage to the deicer surface. Remove very slowly and carefully. If deicer has failed and is to be returned under request for warranty, extreme care should be exercised so that no additional damage is incurred to the deicer during and after removal.

e. Remove residual cement from blade. Use Turco #3 or equivalent to help with dried cements.

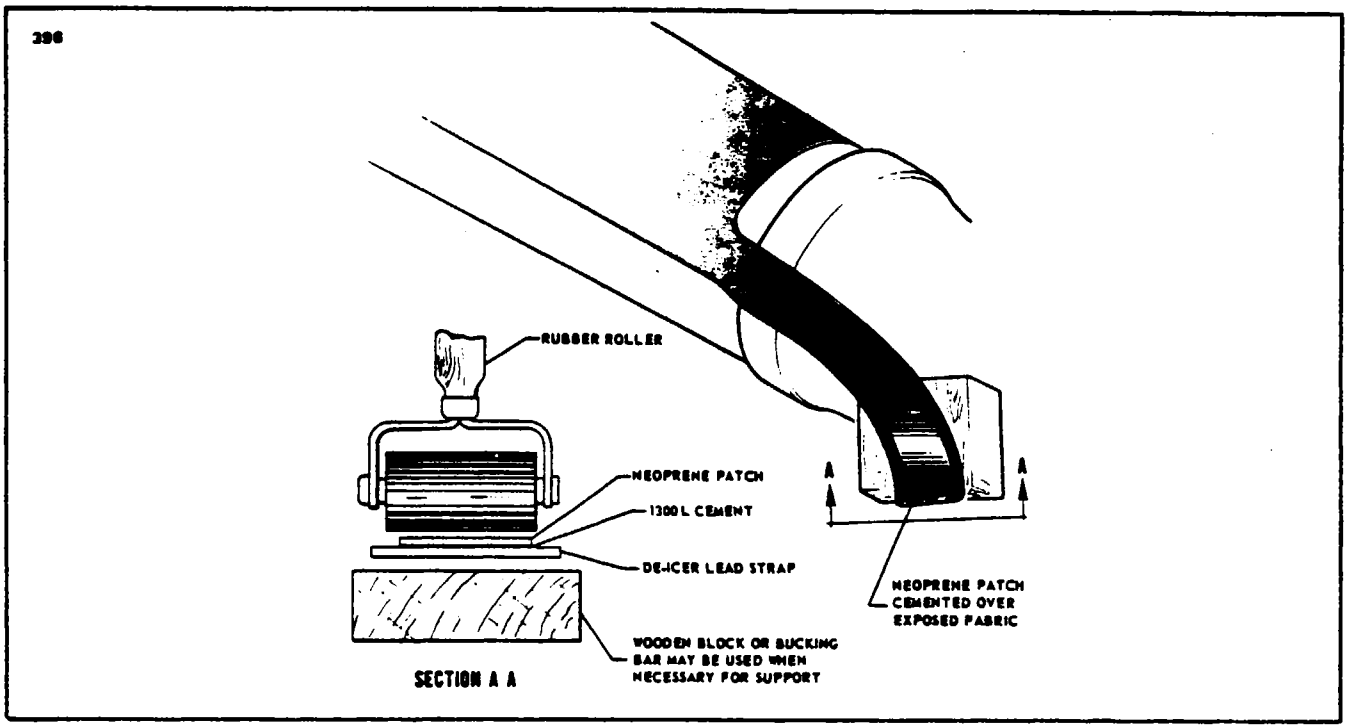

Figure 14-16. Repair of Lead Strap

14-42a. REMOVAL AND INSTALLATION OF AIR INLET LIP ASSEMBLY. (S/N 31T-8304001 and up.)

a. Disconnect the electrical connector in the lower cowl which supplies power to the lip deicer if installed.

b. Remove the screws which secure the lip assembly to the lower cowl. Discard all these screws and replace with new MS24693-C29 (P/N 414 740) screws.

c. Gently pry the lip from the intake scoop.

d. Prior to replacing the lip assembly onto the intake scoop inspect the anchor nuts for their locking ability by trying to screw the new attachment screws into the anchor nuts by hand pressure only. Replace any anchor nut NAS686A06 (P/N 406 824) which will allow screw engagement by hand pressure only.

e. Prior to installing the lip assembly, coat all new attachment screws with No. 222 Loctite. Make sure the thread bearing surface is completely coated.

f. Install the lip assembly and secure with the new Loctite coated screws. Wipe off any excess Loctite from around the lip and screw heads.

g. Reconnect the electrical connection of the lip deicer if installed.

14-43. PREPARATION OF SURFACE PRIOR TO INSTALLATION OF DEICER. The following procedures are to be followed when preparing the propeller blade surface and the air inlet lip so the deicer boots may be correctly installed:

Propeller Blade Preparation:

a. Mark and cut from masking tape a pattern the size of the propeller deicer including the first inch of the lead strap. (Refer to Figure 14-17.)

b. Place a mark at the hub end of the blade in line with the blade leading edge. The location for this mark can be determined by sighting along the leading edge. Starting at the hub (see following NOTE) center the pattern on this mark and stick the pattern to the leading edge. Mark the position of the deicer lead strap where it crosses the hub.

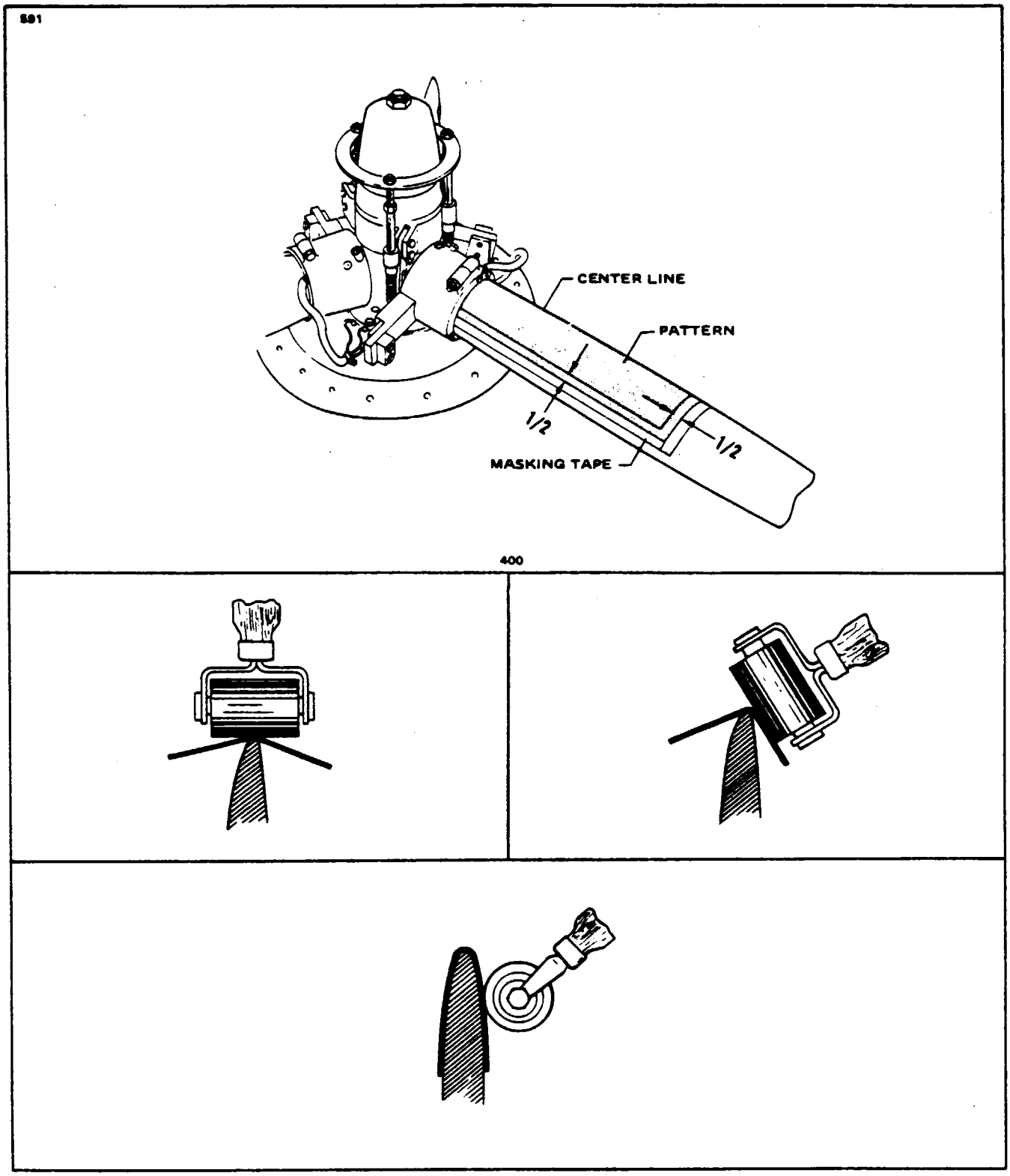

Figure 14-17. Propeller Deicer Installation

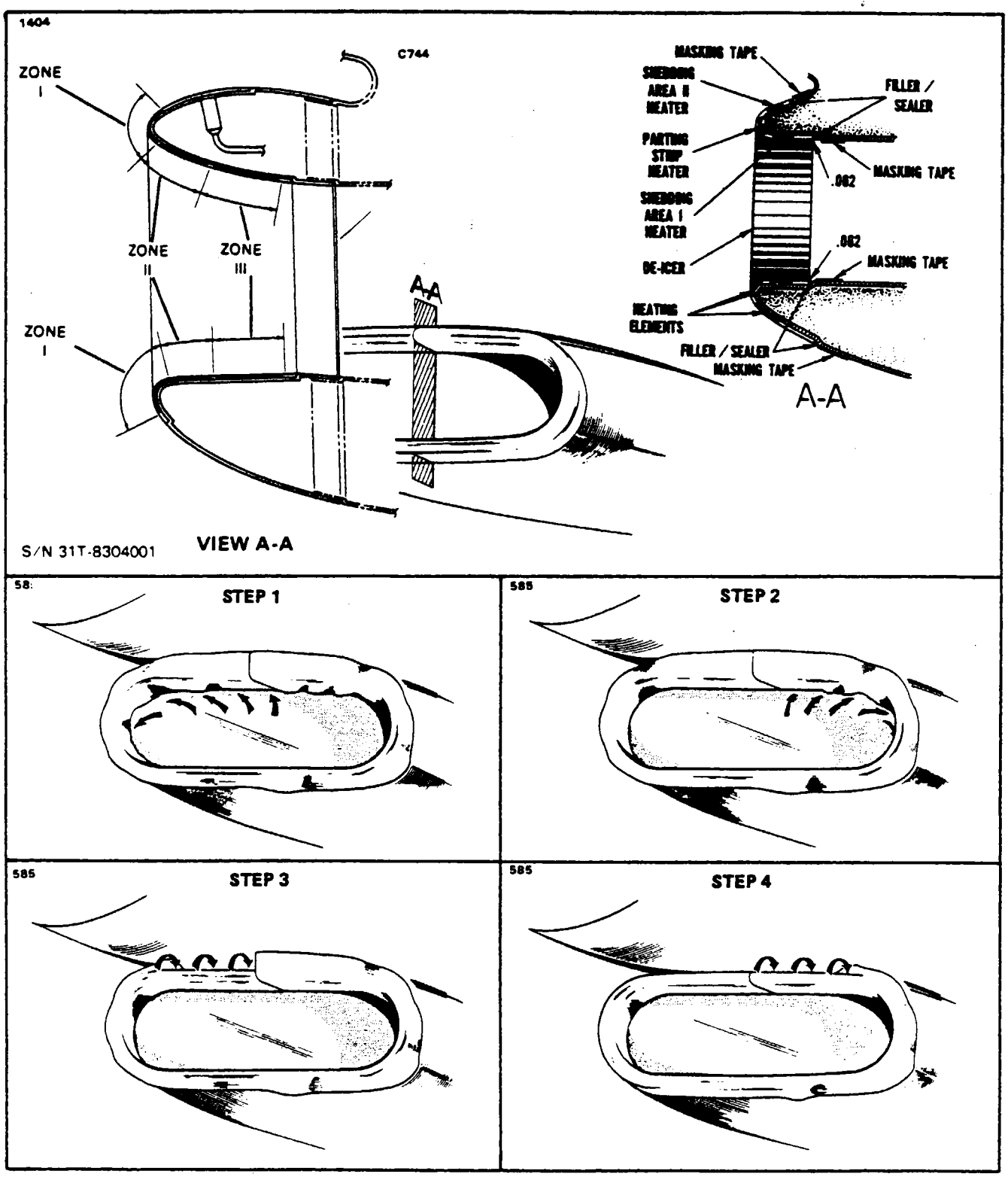

Figure 14-18. Engine Air Inlet Lip Deicer Installation

NOTE

All deicers on a single propeller must be located the same distance from the hub for rotational balance.

c. Remove the pattern and remove any paint in the marked off area. Clean down to bare metal. Next, clean the area thoroughly with MEK or acetone. For final cleaning, wipe the solvent off quickly with a clean, dry lint-free cloth to avoid leaving a film.

CAUTION

Cleanliness of metal and rubber parts cannot be too highly stressed. Only perfectly clean surfaces will assure maximum adhesion.

d. Using a pencil or pen, mark a centerline at the hub of the propeller blade and on the tape at the outboard edge of the masked area.

Engine Air Inlet Lip Preparation:

e. Clean the surface thoroughly with MEK or acetone. For final cleaning, wipe the solvent film off quickly with a clean, dry cloth before it has time to dry.

f. Place a strip of 1 inch wide masking tape around the inside and outside of the air inlet scoop so the leading edge of the tape is along the edge of the recess in the fiberglass.

g. Fill any seams or pockets in the fiberglass with EC-801 sealing compound; then scuff sand the entire area lightly. Remove sanding dust with a compressed air gun.

14-44. APPLICATION OF CEMENT. The following procedures are for the application of cement on the boots themselves and on the mating surface. Instructions for each type of boot are as follows:

Propeller Blade Deicer Boot:

a. Using a silver pencil, mark a centerline on the glossy side of the deicer.

b. Moisten a clean cloth with MEK or acetone and clean the unglazed surface of the deicer, changing cloth frequently to avoid contamination of the clean area.

c. Thoroughly mix the EC1300L or EC1403 cement. Apply one even brush coat of cement to the unglazed back surface of the deicer. Cement one inch of the deicer lead strap. Allow to air dry for a minimum of one hour at 40°F or above, when the relative humidity is less than 75%. If the humidity is 75% to 90%, allow two hours drying time. Do not apply cement if the relative humidity is higher than 90%. After allowing the proper amount of drying time, apply a second even brush coat of EC1300L or EC1403 cement.

NOTE

If curling of the deicer edges is a problem, apply masking tape to the edges of the glazed side before applying cement to the unglazed side. Remove the tape before starting to install the deicer.

NOTE

MEK can be used instead of Toluol to tackify cement; however, tests show that MEK causes rapid drying and provides only 10 seconds working time for deicer application compared with 40 seconds for Toluol.

TABLE XIV-IV. REQUIRED MATERIALS FOR REPAIR OF DEICERS

The materials and tools listed below are commercially available and are not supplied by B.F. Goodrich in kit form:

Item	Amount
Cement EC-1300L or EC-1403 (3M Mfg. Co.)	1-1/2 pt. for six blades and inlet lip
Sealer A56B (B.F. Goodrich)	1 pt. for six blades and inlet lip
Cleaning Solvent MEK (Methylethylketone) or Acetone	
B.F. Goodrich Filler 82-075A and B or 3M Sealer EC-801 and EC-1031	
B.F. Goodrich Sealer 82-076-1 and -2 or Lowe Brothers' paint C-19861, C21871 and C-16176	
Cleaning Cloth - any clean, lint-free cloth	
2 inch Rubber Hand Roller	
1/4 inch Metal Hand Stitcher	
Scissors	
Turco #3 (Turco Products Co.)	1-1/2 pt. for six blades and inlet lip
Masking Tape	

d. Apply an even brush coat of EC1300L or EC1403 cement on the cleaned surface of the propeller blade, immediately after the second coat of cement has been applied to the deicer. This timing is important for the cement on both surfaces to reach the tack stage at the same time.

Engine Air Inlet Lip Deicer Boot:

e. Moisten a clean cloth with MEK or acetone and clean the unglazed surface of the deicer, changing cloth frequently to avoid contamination of the clean area.

NOTE

For best results, the cementing and installation should be made at normal room temperature.

f. Thoroughly mix the EC1300L cement (Piper Code No. 915 005). Apply one even brush coat of cement to the entire area within the masking tape. Allow to air dry for at least one-half hour.

g. Apply an even coat of EC1300L cement to the unglazed back surface of the deicer. Allow to air dry for at least one-half hour.

h. When the cement dries on both the air inlet and deicer, brush on another coat of cement on both the inlet and deicer cemented surfaces. Allow ample drying time of the cement, a minimum of one-half hour.

NOTE

If curling of the deicer edges is a problem, apply masking tape to the edges of the glazed side before applying cement to the unglazed side. Remove the tape before starting to install the deicer.

14-44a. PREPARATION OF ENGINE INLET LIP BOOTS PRIOR TO INSTALLATION. (S/N 31T-8304001 and up.) PP-46168

a. Ascertain that the boot is the proper length by laying it out flat on a smooth level surface. The proper length is 36.75 inches +/-.50 of an inch, measured .75 of an inch in from the electrical lead edge of the boot.

NOTE

Do not install boots which are not the proper length.

b. With the boot laying flat, check the electrical resistance of the heating elements in the following manner.

NOTE

Establish the resistance of the test instrument leads or a Wheatstone or Kelvin Bridge. Zero this resistance out of the equipment or subtract it from the test readings. In no way should it be included in the test readings. See Table XIV-VA for test values.

c. Do not install a boot assembly that does not conform to the required resistance values given in Table XIV-VA.

14-45. INSTALLATION OF DEICERS AND REQUIRED MATERIALS. It is imperative that the following instructions be followed exactly to insure maximum adhesion to the mounting surface. Furthermore, special attention should be given to the distance noted in Figure 14-20 to assure a neatly dressed harness and boot connection at the terminal clamp assembly on the propeller hub.

The following instructions for the propeller deicer and the lip deicer are to be followed when the cement coats are tacky dry on both deicer surface and mounting surface. It is recommended that two persons perform the following procedures:

Propeller Deicer:

a. Position the deicer on the propeller leading edge, using centerlines starting from the hub after tackifying the cement in that area with a clean, lint-free cloth dampened (not saturated) with Toluol. (Refer to Figure 14-19.) Make sure that the strap will fall in the position previously marked. Working towards the tip, tack the deicer centerline to the leading edge of the propeller blade. Tackify cement as necessary. If the deicer is allowed to get off course, pull up with a quick motion and remove deicer. Re-cement per Paragraph 14-44, c and d if necessary before proceeding. Roll firmly along the centerline with a rubber roller, as shown in Figure 14-20.

b. Roll the tapered edges, especially the inboard edge, of the deicer with a narrow steel stitcher roller.

CAUTION

To avoid damage to resistance wires, do not use metal stitcher on body of deicer.

c. Apply one even brush coat of sealer around the edges of the installed deicer.
d. Remove the masking tape from the blade immediately after applying the sealer.
e. Allow 24 hours cement curing time before turning up propeller. Allow 72 hours curing time before operating the deicers. Handle the propeller carefully to prevent damage to the deicers.

Engine Inlet Lip Deicer: The following procedure should be used when bonding the deicer to the engine air inlet:

f. To bond each section of the deicer to the air inlet, tackify it by using a clean, lint-free cloth dampened (not saturated) with Toluol.

NOTE

Tackify only the cemented surface that you intend to work on immediately.

g. Start the installation at the inside surface of the upper lip, where the deicer butts together. Curl the deicer so that the cemented surface is facing out; insert the lead wire through the appropriate holes.
h. Dry fit the part against the inlet surface and keep the edge of the deicer against the recess edge of the inlet.
i. When satisfied that the alignment of the deicer on the inlet is satisfactory, hold the deicer in this position and fold back the lead wire end and tackify around the lead wire and also the mating surface on the inlet. Press the deicer into position and roll with rubber roller.
j. Repeat Step "i" on the other end of the deicer and butt the two ends together on the inlet surface. Press into position and roll with rubber roller.
k. Now that the deicer ends are correctly in position and held, release your hold on the rest of the deicer. Tackify approximately one inch around the inside lip up from the recess edge and the mating surface on the deicer.
l. Install the inside radius first. Keep the deicer taut from the lead wire to radius and against the recess edge. Continue to install the deicer by dividing each remaining section along the inside recessed edge. Work the entire inside edge of the deicer into place. Some stretching or crowding of the deicer may be necessary.
m. After the inside of the deicer is in position along the recess edge, tackify the remaining inside lip surface and the mating surface of the deicer up to the leading edge. Roll the installed surface with a rubber roller. Run your hand across the installed surface to check for trapped air, remove any trapped air if found.
n. After the inner surface of the deicer is installed up to the leading edge, dry fit the deicer over the leading edge to estimate the amount of stretching or crowding of the deicer that may be needed.
o. Starting again at the butt splice of the deicer, tackify and install over the leading edge. Keep the butt splice together. Tackify and install the flat surfaces first and then stretch the deicer over the radius ends.
p. Using the rubber roller, again roll the entire deicer surface and check for trapped air.
q. Use a hook trim knife to trim any excess material. Use the .25 inch steel stitcher to roll the recessed edges firmly into place.

r. Apply one even coat of sealer around the edge of the installed deicer outside and inside the intake scoop and in the seam at the top of the scoop where the ends of the deicer meet. (Refer to Figure 14-18.)

s. Seal the area around the wire leads where they pass through the lower cowl with RTV Sealer 102 Silicone rubber.

t. Remove the masking tape from around the edges of the deicer immediately after applying the sealer. Clean up excessive cement with MEK.

u. The deicers should not be operated before the cement has dried for a minimum of eight hours. Avoid handling the deicer when removing the bottom cowl or for any other purpose, to prevent damage to the heating elements.

14-45a. INSTALLATION OF ENGINE INLET LIP DEICER AND REQUIRED MATERIALS. (Refer to Figure 14-18.) (S/N 31T-8304001 and up.) PP\68168

a. After dimensional and resistance tests are properly completed, lay the boot on a clean, flat dry surface with the wire leads side up. Clean this surface with Methylethylketone (MEK) or Toluol and allow to dry.

b. Clean the fiberglass lip of the air inlet with MEK or Toluol and allow to dry.

c. Using a yellow marker, mark the inner surface of the boot at increments of .25, .50 and .75 of full length. Also make corresponding marks on the fiberglass lip assembly.

d. Apply one coat of Scotch grip rubber adhesive (#1300L), Piper Code No. 915 005 to both the boot assembly and the fiberglass lip.

e. Allow both to dry for 45 minutes and then apply a second coat of adhesive to each part. Again allow to dry for 45 minutes.

NOTE

The next step will require the use of an oven which is capable of maintaining 170° F for five minutes, and have sufficient volume to allow the boot assembly to be laid out flat. (Approx. .37 inches.)

f. After second drying cycle, place the boot assembly (cement side up) into the oven and heat soak at 175° F for five (5) minutes.

g. Remove the boot from the oven. Place on a dry flat surface, grip the boot assembly at each end and gently stretch approximately one inch and hold for two (2) minutes.

h. Put the wire leads through the hole in the fiberglass lip assembly. While doing this, align the .50 length mark on the boot assembly and lip assembly.

NOTE

To bond the deicer boot to the air inlet, it may be necessary to tackify the cement. Use a clean, lint-free cloth dampened (not saturated) with Toluol. Tackify only the cemented surfaces that you intend to work on immediately.

i. When satisfied that the alignment of the deicer on the inlet is satisfactory, hold the deicer in this position and fold back the lead wire end and tackify around the lead wire and the mating surface on the inlet. Using hand pressure only press the boot in place at the wire leads and at the .50 length marks tackifying the cement as required.

j. Continue to work the boot into place, making sure to align all marks at the .25, .50 and .75 points.

k. Roll the external surface with a hard rubber rolling tool to assure no air bubbles remain between the rubber boot and the fiberglass surface.

l. Apply masking tape around the edges of the inlet where the boot meets the fiberglass edges (See Figure 14-18, View A-A) to prevent sealer from contacting any areas beyond the deicer boot edges.

m. Apply one even coat of sealer around the edge of the installed deicer, both outside and inside of the intake scoop and in the seam at the top of the scoop where the ends of the deicer meet.

n. Seal the area around the wire leads where they pass through the lower cowl with EC-801B-Class A2 Compound (MIL-S-7502B).

o. Remove the masking tape from around the edges of the deicer immediately after applying the sealer. Clean excessive cement with MEK.

p. When the boot has cooled to room temperature (70° F) repeat the resistance test prior to installation of assembly to the engine cowling.

g. The deicers should not be operated before the cement has dried for a minimum of eight hours. Avoid handling the deicer when removing the bottom cowling or for any other purpose to prevent damage to the heating elements.

THIS SPACE INTENTIONALLY LEFT BLANK

401

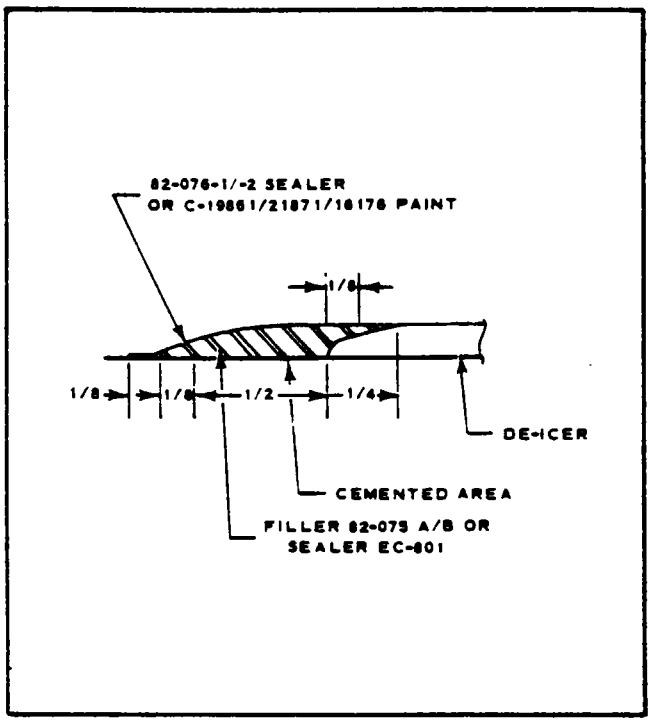

Figure 14-19. Sealer Application (Prop Boot)

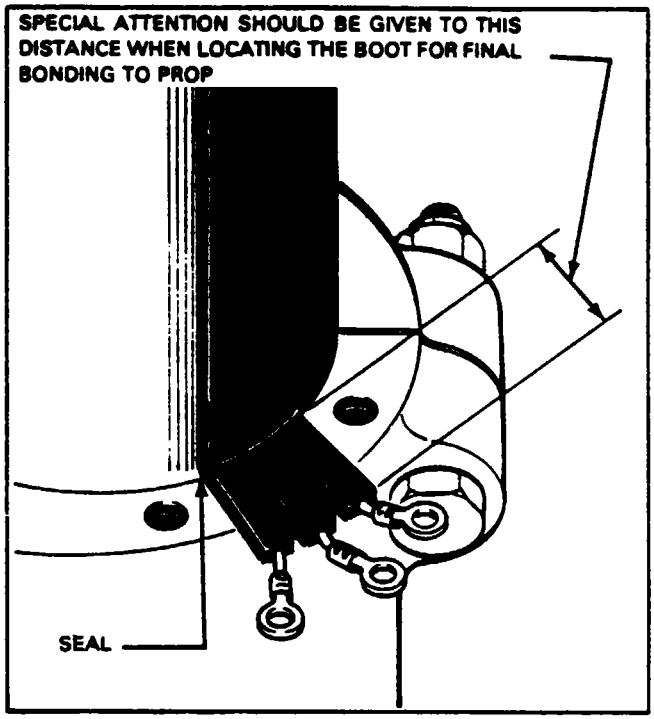

Figure 14-20. Sealer Application (Lead Strap)

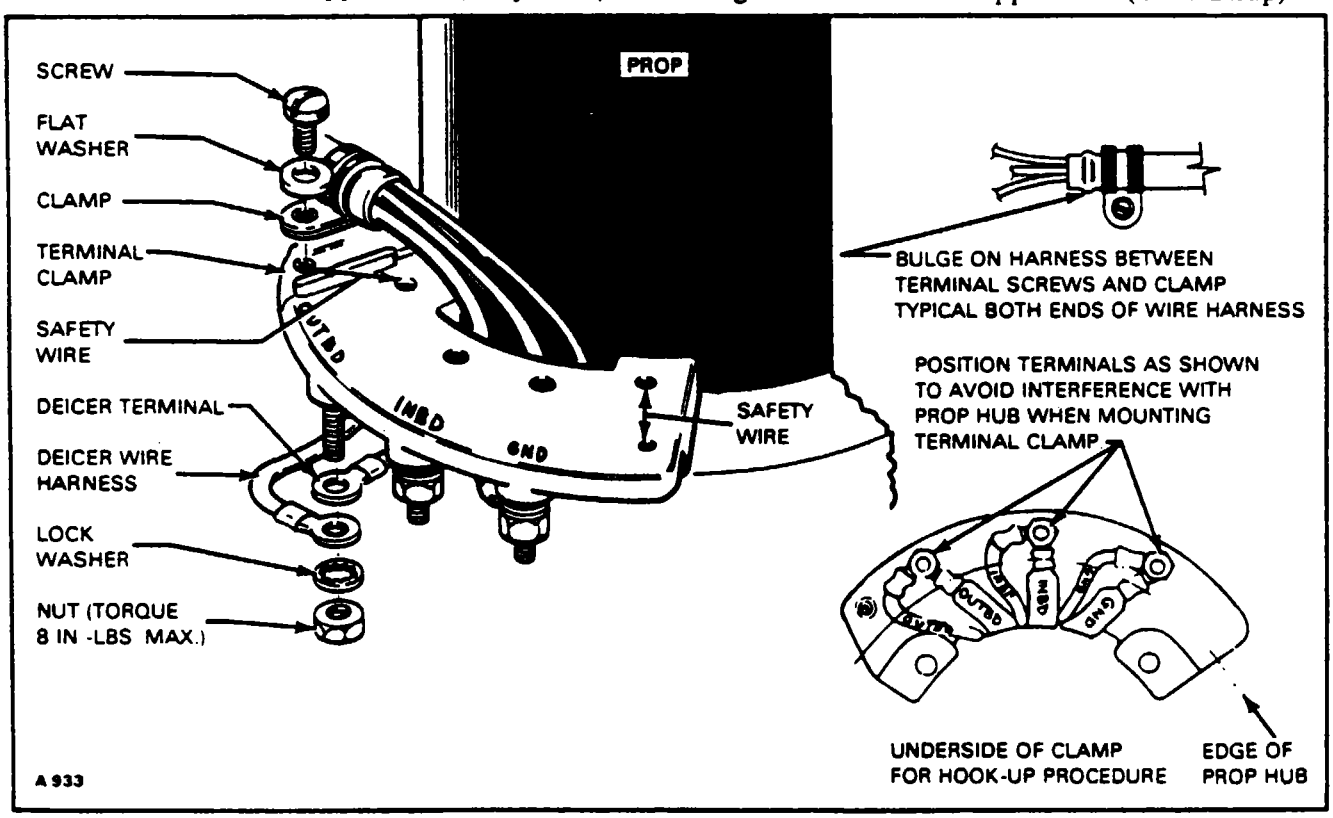

Figure 14-21. Terminal Clamp Assembly

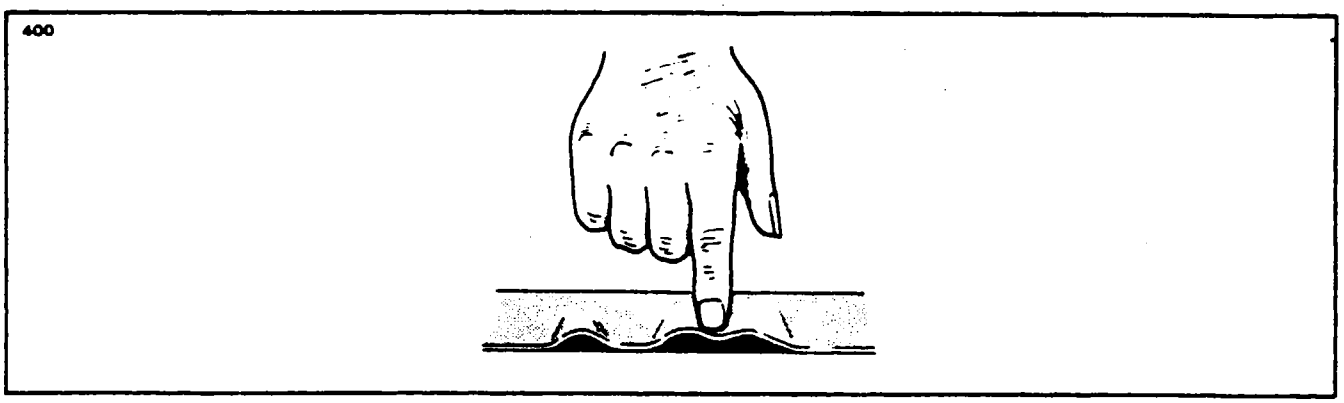

Figure 14-22. Wrinkled Deicers

14-46. PREPARATION AND APPLICATION OF SEALER. Propeller and lip deicers loosened due to destruction of adhesive bond by lubricants do not respond well to re-cementing. Therefore, removal, cleaning, and reinstallation of the deicers are recommended. (Refer to Paragraphs 14-42, 14-42a, 14-45 and 14-45a.)

a. Clean an area .500 inch wide around the circumference of the propeller deicer down to the bare metal. The area .250 along the recessed edge outside the intake scoop should be cleaned for the lip deicer. Use MEK or acetone and clean thoroughly.

b. Clean outer .500 inch and back under deicers about .250 inch on all sides past loosened areas with MEK or acetone. For final cleaning, quickly wipe off solvent with a clean, dry, lint-free cloth to avoid leaving a film.

c. Re-cement loosened areas of deicers in accordance with Paragraphs 14-44 and 14-44a.

d. Mix the filler, sealer, or paint thoroughly and in the proper proportions by weight, as given in the following steps:

1. 82-075A/B - one part A/one part B.
2. 82-076-1/2 - Twelve parts - 1/one part - 2.
3. EC-1031/EC-801 - Twelve parts 1031/one hundred parts 801.
4. C-19861/C-21871/C-16176 - one part 19861/seven parts 21871/two and two-thirds parts 16176.

e. Locate masking tape approximately .125 inch beyond cemented area around the propeller deicer to allow application of filler directly to metal. Place masking tape along the edge of the recess on the outside of the engine air inlet scoop to allow application of filler directly into the gap between the deicer boot and the edge of the recess. Apply one even brush coat of 82-075A/B filler (or EC-801 sealer) over the .125 inch of bare metal, cemented area, and about .125 inch of the boot for the propeller deicers. For the lip deicer, simply fill the gap evenly and smoothly. (See Figure 14-18.)

f. Insure that a fillet of filler completely covers the area between propeller deicer strap, the blade, and the hub. (See Figure 14-20.) Immediately remove masking tape from propeller and/or engine inlet lip and allow filler to dry for six hours. Dress the leads as shown in Figures 14-20 and 14-21.

g. Apply new masking tape approximately .125 inch beyond filler to allow application of sealer directly to the mounting surface. Apply one even brush coat of 82-076-1/2 sealer (or C-19861/C-16176 paint) over .125 inch of mounting surface, filled area, and .250 inch of deicer. (See Figure 14-19.)

h. Insure that sealer completely covers area between deicer strap and blade on propeller. (See Figure 14-20.) Sealer must also completely cover the area between the deicer and edge of recess on the outside of the engine air inlet lip. Immediately remove masking tape and allow sealer to dry for 24 hours before starting engine.

TABLE XIV-V. ELECTRICAL RESISTANCE

	Resistance Check	Max.	Min.
Propeller Deicer	1 Blade each Element	5.26	4.58
	3 Blades in Parallel	1.78	1.55
Lip Deicer	Parting Strip	1.95 +/-5%	
	Shedding Area I	1.97 +/-5%	
	Shedding Area II	2.22 +/-5%	

TABLE XIV-VA. ELECTRICAL RESISTANCE - LIP DEICER (S/N 31T-8304001 and up)

LEAD WIRE#	HEATER ZONE	RESISTANCE = OHMS
1	I	.966 +/-.05
2	II	1.224 +/-.06
3	III	1.305 +/-.06
NOTE: ALL ABOVE VALUES OBTAINED WITH BOOT AT 70° F +/-5° F.		

BFGR 5E19908

THIS SPACE INTENTIONALLY LEFT BLANK

TABLE XIV-VB. LIP DEICER - TEMPERATURE/SENSOR CHECK

TEMPERATURE	RESISTANCE (OHMS)
200	286
190	280
180	272
170	264
160	258
150	250
140	244
130	236
120	230
110	224
100	218
90	212
80	206
70	200
60	194
50	188
40	182
30	176
20	170
10	166
0	160
-10	154
-20	148
-30	144
-40	138
-50	132
-60	128
-66	124

14-47. WRINKLED DEICERS. (Refer to Figure 14-22.) If edge of deicer is found wrinkled or loose, try re-cementing. Use MEK or Toluol to loosen the bond for an additional 1/4 inch beyond the loose or wrinkled area. Apply one coat of EC1300L or EC1403 cement to the deicer and bonding surfaces and allow to air dry for one hour. Then apply a second coat of EC1300L or EC1403 cement to both the deicer and bonding surface. Allow to dry. Retackify with MEK or acetone and press with fingers to work out wrinkles or to secure loose edges. If material has stretched and will not cement flat, replace the deicer.

14-48. ELECTRICAL CHECK OF DEICERS.

a. Propeller Deicers:

1. If the propeller is installed on an airplane, the deicer circuits on the propeller must be electrically isolated from the rest of the airplane wiring when making the following resistance check. The isolating can be done by removing the brush block, disconnecting the timer and engine wire harness at any convenient place, or by retracting the brushes and slipping a sheet of paper between the brushes and the slip rings. If the latter method is used, make certain that the brushes are not misaligned or damaged by insertion of the paper shim.

2. Check the electrical resistance of each of the elements within the deicer, by checking between the terminals. (Refer to Schematic, Figure 14-15 and Resistance Readings in Table XIV-V.)

NOTE

The resistance values for Step 2 of this paragraph apply only to deicers that are completely disconnected from the terminal studs and electrical connectors.

3. Check the electrical resistance of the elements in parallel by checking between the slip rings. (Refer to Figure 14-15 and Table XIV-V.)

NOTE

Make all continuity checks of the propeller deicer circuits with the boot switch OFF and the propeller stationary.

THIS SPACE INTENTIONALLY LEFT BLANK

4. Check for intermittent open circuits by tensioning the deicer harness slightly while measuring the resistance. Also, press lightly on the deicer surface in the area adjacent to the strap retainer. Resistance must not vary.

5. Identification of the circuits within the element may be confirmed by referring to the resistance values and schematic diagram, Figure 14-15. Proper identification is necessary in order to make the system cycle properly and to obtain the correct amperage values during system operation. Minimum and maximum ohms between common ground and either of the other terminals is 4.58 to 5.26 ohms.

6. Reconnect circuits that may have been disconnected and remove paper shims, if installed.

b. Inlet Lip Deicer:

1. The air inlet deicer may be checked simply by disconnecting the harness plug and the ground connection inside the lower engine cowl. The upper cowl will have to be removed to do this.

2. Check the electrical resistance of each of the elements by checking between each pin in the plug and the ground lead. Pin 1 is the Parting Strip element; Pin 2 is the Shedding Area I element, and Pin 3 is the Shedding Area II element. (Refer to Figure 14-15 and Table XIV-V or Table XIV-VA.)

3. System power may be checked, and cycle time and sequence can be checked by using a voltmeter and checking the pins in the connector on the aircraft harness with system power on.

4. Reconnect the circuit and install the engine cowl.

14-49. INSTALLATION OF PROPELLER DEICER STRAPS AND WIRE HARNESS.

a. The deicer lead strap is fastened to the bulkhead in the same positions from which they were removed.

b. The deicer strap is to be attached to the studs on the spinner bulkhead.

CAUTION

Never use Type "B" star washer (teeth on outer diameter) adjacent to tongue of deicer terminals.

c. Make certain that there is no slack in the deicer lead strap between the terminals and the clip. This is important because it assures enough slack between the clip and the strap restrainer to allow for proper feathering. A test should be conducted on each propeller deicing system to insure that deicer lead straps are installed in such a manner that the propeller can be moved from full low pitch through the feathering position without placing the straps in tension.

NOTE

Deicers should have a piece of gray plastic bonded to the air side (shiny side) of the deicer strap as shown in Figure 14-23.

d. If damage occurs to slip ring wire harness, rubber spacers or hose clamps, replace damaged parts.

14-50. BALANCING. To assure balance of the propeller assembly, the original balancing weights or their equivalents must be reinstalled. The weights must be left in their original position on the propeller hub. The restrainer and weights should not interfere with any part of the propeller assembly under any condition. If for any reason balance weights were removed, reinstall safety wire on screws.

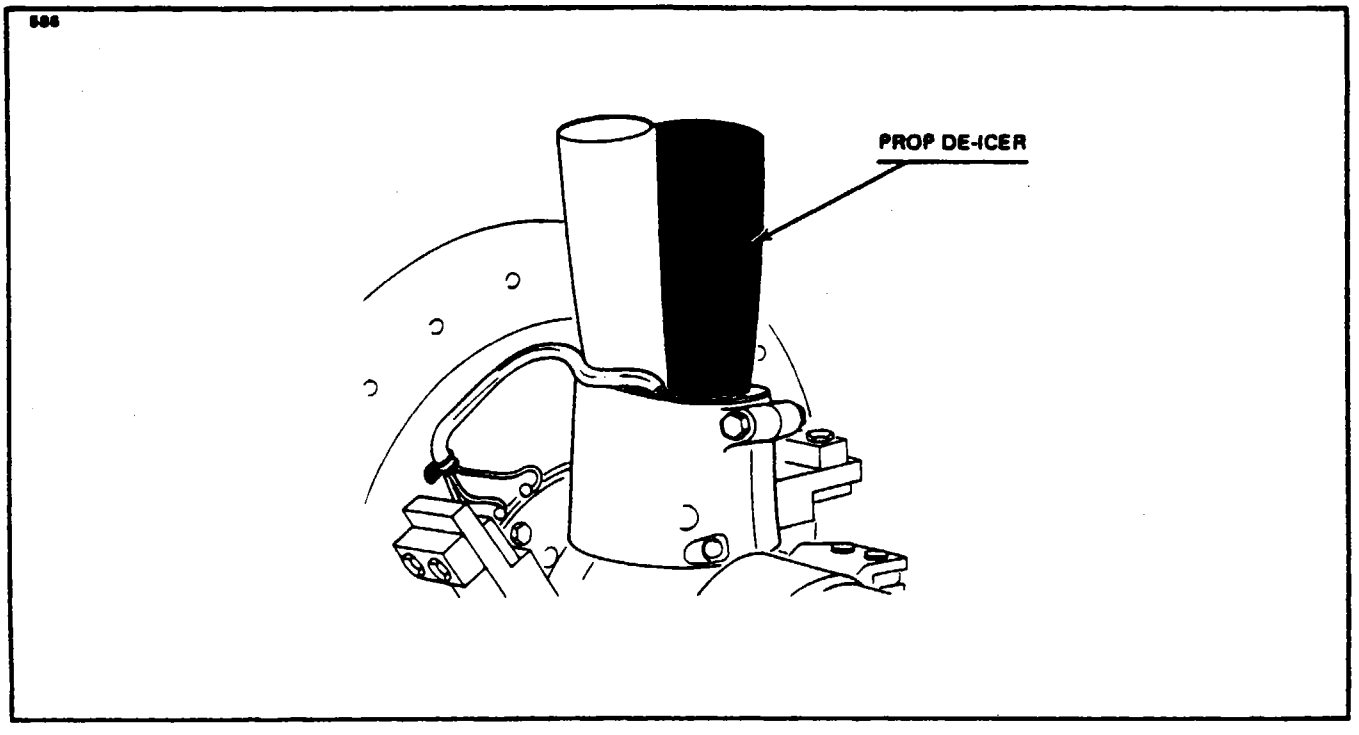

Figure 14-23. Propeller Blade in Feather Position

14-51. FINAL ELECTRICAL CHECK.

a. Make certain all terminals are tight but not over-torqued.

b. Make sure insulation on all wires is in good condition, especially engine compartment.

c. Make sure all wire ties are tight and in proper places to prevent chafing or interruption of moving parts caused by loose wires.

d. Make sure all wires are tight in connectors and no bare portion of a wire will short on any nearby object.

e. Make sure wires are not sharply bent, pinched, or pulled tight in their normally installed location.

14-52. OTHER COMPONENTS. Do not attempt internal repairs of the timer, ammeter or switches. If inoperative, these components must be replaced with one of the correct part numbers. For any other repair or maintenance problems not covered in this manual, inquire at B. F. Goodrich Engineered Systems Company Division of the B. F. Goodrich Company, Akron, Ohio 44318.

14-53. TIMER TEST. Field experience indicates that too often the timer is considered at fault when the true trouble lies elsewhere. Before removing a timer as defective, perform this test:

a. Disconnect wire harness at timer and with deicer switch ON, check voltage from Pin B of harness plug to ground. If system voltage is not present, the fault is not in the timer. If system voltage is present at Pin B, check ground circuit using ohmmeter from Pin G to ground. If no continuity is shown, the fault is in ground lead, not in timer. If ground connection is open, the timer step switch will not change position.

b. When power and ground circuits have been checked, connect a jumper wire from Pin B of harness to B contact of timer socket. Connect a jumper wire from Pin G of harness to G contact of timer socket to complete the power circuit. Now use voltmeter from ground to the timer socket and check that timer is cycling to deliver system voltage to C, D, E, and F contacts in that order. (The starting point is not important, but sequence must be as given.) Each of these four contacts must deliver voltage for approximately 34 seconds, in turn, and there must be zero voltage on the three contacts not energized.

c. If the timer meets these requirements, it is not the cause of the trouble. If it fails to perform as indicated, the trouble does lie in the timer, and it should be replaced.

THIS SPACE INTENTIONALLY LEFT BLANK

TABLE XIV-VI. TROUBLESHOOTING CHART (ENGINE DEICING SYSTEM)

Trouble	Cause	Remedy
Ammeter shows zero current. (All 4 phases of the 2 minute cycle.)	Tripped circuit breaker switch.	Locate and correct short before setting circuit breaker.
	Defective power source.	If no voltage into switch, locate and correct break.
	Circuit breaker switch faulty.	If no voltage at switch output with voltage at switch input, replace the switch. If voltage is satisfactory at switch output, go to next step.
	Ammeter faulty. (If some or all deicers heat with ammeter at zero, replace the ammeter.)	Test for voltage up to and out of ammeter. If low or zero output and input satisfactory, replace ammeter. If no voltage to ammeter, locate and fix break between switch and ammeter.
	Break between ammeter and timer.	Disconnect harness at timer and check voltage at Pin B (of harness) to ground. If none, locate and correct break.
Ammeter shows normal current part of cycle, zero current rest of cycle.	Open circuit between timer and heating element.	Use heat test to find deicers not heating and test for voltage on that contact of wire harness plug. (At brush block assembly or connector.) If zero over 2 minutes, locate and fix break in wiring from timer to wire harness plug.
	Burned out lip deicer.	Replace.

TABLE XIV-VI. TROUBLESHOOTING CHART (ENGINE DEICING SYSTEM) (cont.)

Trouble	Cause	Remedy
Ammeter shows normal current part of cycle, zero current rest of cycle. (cont.)	Break between brush block assembly and prop deicer lead straps.	If there is voltage to brush block wire harness plug, try voltage at junction of deicer lead and slip ring lead. If no voltage, find and correct break in wiring within brush block or no contact of brush to slip ring.
	No ground circuit, one engine.	If voltage is found at deicer leads, locate and fix break from deicer to ground.
Ammeter shows normal current part of cycle, low current rest of cycle.	Elements of different phases heating in the same phase.	Locate and repair incorrect connections.
	Break in deicer or slip ring leads.	Disconnect deicers to check heater resistance as in Paragraph 14-48. If satisfactory, locate and fix break in slip ring leads.
	High resistance in circuit with low current.	If not in contact of brush to slip ring (including ground brush), trace wiring to deicer and to timer to fix partially broken wire, loose or corroded connection.
	Shedding Area I and/or Shedding Area II phases of lip deicer inoperative but Parting Strip heater working.	Replace deicer if current exists at all terminals during a cycle.

TABLE XIV-VI. TROUBLESHOOTING CHART (ENGINE DEICING SYSTEM) (cont.)

Trouble	Cause	Remedy
Ammeter shows low current over entire cycle.	Aircraft voltage low.	Check voltage into switch.
	Ammeter faulty.	Test for voltage up to and out of ammeter. If low or zero output and input satisfactory, replace ammeter. If no voltage to ammeter, locate and fix break between switch and ammeter.
	High resistance up to timer.	Check for partially broken wire, loose or corroded connection in wiring from aircraft supply to timer input.
Ammeter shows excess current over entire cycle.	Ammeter faulty.	Test for voltage up to and out of ammeter. If low or zero output and input satisfactory, replace ammeter. If no voltage to ammeter, locate and fix break between switch and ammeter.
	Ground between ammeter and timer.	Disconnect harness at timer and with ohmmeter check from Pin B (of harness) to ground. If ground is indicated, locate and correct short.

TABLE XIV-VI. TROUBLESHOOTING CHART (ENGINE DEICING SYSTEM) (cont.)

Trouble	Cause	Remedy
Ammeter shows normal current part of cycle, excess current rest of cycle.	Ground between timer and brush block.	Disconnect leads at brush block and, with ohmmeter, check from power leads to ground. If ground is indicated, locate and correct short.
	Ground between brush block and deicers. (Excluding ground brush circuit.)	If no short exists at brush-slip ring contact check for ground from slip ring lead to propeller assembly while flexing slip ring and deicer leads. If a ground is indicated, locate and correct short.
	Short between two adjacent circuits.	Check for cuts or low resistance between circuits. If any, locate and correct.
	Timer faulty.	Test timer as in Paragraph 14-53.
Ammeter does not "flick" approximately every 34 seconds.	Timer ground open.	Disconnect harness at timer and check with ohmmeter from Pin G (of harness) to ground. If no circuit, fix break per schematic diagram.
	Timer contacts are welded (caused by short circuit in system.)	Test timer as in Paragraph 14-53. If timer does not cycle with voltage at Pin B, replace timer but be sure short causing original failure has been located and corrected.

TABLE XIV-VI. TROUBLESHOOTING CHART (ENGINE DEICING SYSTEM) (cont.)

Trouble	Cause	Remedy
Ammeter flicks between 34 second phase periods.	Loose connection between aircraft power supply and timer input.	If trouble occurs over entire cycle, trace wiring from power source to timer input to locate and tighten loose connection.
	Loose or poor connection timer to deicers.	If trouble occurs in part of cycle, find which deicers are affected and check for rough or dirty slip rings causing brush to "skip," or poor connection at plug. If not this, trace circuits to locate and fix loose or poor connection. (If all heaters on one deicer are affected, check the ground circuit.) Flex deicer straps for break in deicer straps.
	Timer cycles erratically.	Test timer as in Paragraph 14-53.
Radio noise or interference with deicers on.	Brushes "arcing."	Check brush alignment as shown in Figures 14-9. and 14-11. Look for rough or dirty slip rings. If this is the cause, clean, machine or replace slip ring assembly, as required. Check slip ring alignment. (Refer to Paragraph 14-34.)
	Loose connection.	Refer to "Ammeter flicks between 34 second phase periods."

TABLE XIV-VI. TROUBLESHOOTING CHART (ENGINE DEICING SYSTEM) (cont.)

Trouble	Cause	Remedy
Radio noise or interference with deicers on. (cont.)	Switch faulty.	Try jumper wire across switch - if radio noise disappears, replace the switch.
	Wiring located within 8 inches of radio equipment wiring.	Relocate at least 8 inches away from input wiring to radio equipment.
Cycling sequence not correct.	Crossed connections.	Check system wiring circuit diagram for improper connections.
Rapid brush wear or frequent breakage.	Brush block out of alignment.	Check brush alignment. (Refer to Paragraph 14-33.)
	Slip ring wobbles.	Check slip ring alignment with dial indicator as shown in Figure 14-8.

14-54. PNEUMATIC DEICING SYSTEM.

14-55. INTRODUCTION. This portion of Section XIV provides service and maintenance procedures for the pneumatic deicing system. This information is current as of the time of this issue.

14-56. DESCRIPTION AND PRINCIPLES OF OPERATION. Each deicer boot is essentially a fabric reinforced rubber sheet, containing built-in inflation tubes. The deicers are attached, by means of cement, to the leading edge of the surfaces to be protected.

The deicers are installed along the leading edges of each wing and the tail surfaces. All sections operate simultaneously. There are flexible air connections on the backside of the deicers called "air connection stems." Each stem projects from the underside of the boot into the leading edge, through a round hole provided in the metal skin, for connection to the airplane air supply system.

Vacuum is applied to the deicer boots at all times by means of the deicer ejector, except when they are being inflated. Deicer inflation is affected by the deicer system control switch. When the system control switch is actuated, the timer energizes the deicer solenoid engage valve for 6 seconds. This valve shuts off the vacuum to the system and directs pressurized air to all the deicers in the system inflating them. The deicer pressure, normally 20 psig is regulated bleed air from the compressor turbine section of each engine. The bleed air leaves the bleed port on both engines at a temperature of 600°F and a pressure of 90 psi. and travels to the intercoolers where the heat exchange process is taking place. As the air is cooled it is routed to check valves and on to a tee in the line where a water separator is mounted. This separator removes any moisture from the air before it enters the pressure regulator. This regulator decreases the pressure from 90 psi, down to 18 psi. +1, -3 psi. for door seal and deicer operation (Refer to Section XIII, or XIIIA for Door Seal System.) This pressure regulator is backed up by a pressure relief valve which cracks open at 21 psi. and becomes full open at 26 psi. should the regulator fail to open. This regulated air is then routed to a three way valve which directs the pressurized air to the deicer system. Upon automatic de-energization of the solenoid valve by the timer, system pressure is bled to ambient by means of the ejector. This process of bleeding air overboard creates the system vacuum which is then reapplied to the deicers to hold them close to the surface skin. Pneumatic system pressure can be monitored during deicer inflation through the pneumatic pressure gauge located on the instrument panel.

A thin coating of conductive cement is provided over the neoprene ply to dissipate static electric charges. These charges, if allowed to accumulate, would eventually discharge through the boot to the metal skin beneath, causing static interference with the radio equipment and possible punctures in the rubber. Also, such static charges would constitute a temporary fire hazard after each flight.

14-57. TROUBLESHOOTING. In the utilization of the troubleshooting charts at the end of these instructions, it must be assumed that the engine bleed air system and the airplane electrical system are operational. It is further assumed that the deicer system installation was made in an approved manner.

14-58. OPERATIONAL CHECK. The pneumatic deicing system should be checked at least every 100 hours. This check can be done on the ground. A visual inspection should be performed to determine the condition of the deicer boots, and any areas in need of repair should be taken care of before continuing with the operational check of the system.

With one engine operating, turn on the deicing system. The pressure will fluctuate as the tubes inflate and deflate. Check the pneumatic pressure gauge. If pressure is satisfactory, observe the operation of the deicers carefully for evidence of malfunctioning. Look for tubes which leak or fail to inflate and deflate properly. Repeat the procedure for the other engine.

14-59. ELECTRICAL TEST. With engines off, turn airplane battery switch to ON position.

a. Deicer Solenoid Engage Valve: Check the valve located beneath the center floorboard just aft of fuselage station 162.60. Turn system switch to ON position. Solenoid valve should be actuated immediately for 6 seconds, as evidenced by an audible "click" that can be felt if hand is placed on the solenoid. If

solenoid valve does not function:

1. Disconnect wires at solenoid. Attach test light or other suitable test equipment to connector and reactuate system switch. If test equipment does not indicate complete circuit:
   (a) Check circuit from timer, to solenoid connector, to ground.
   (b) Replace timer.
2. Use ohmmeter to check solenoid for open circuit. If solenoid circuit is open, replace solenoid valve.

14-60. PRESSURE LEAKAGE TEST.

a. Connect a source of clean air to the deicer air system at the outlet port of the deicer solenoid engage valve. It is necessary that the inlet pressure be 20 psig to perform this test. Observe the system pressures on the airplane's pneumatic pressure gauge.

b. Apply 20 psig pressure to the system by means of a hand operated on-off valve.

c. Wait until system pressure stabilizes; then turn hand valve OFF trapping the pressure in the deicer system.

d. Observe the system for leakage. The leakage rate should not exceed a pressure drop of 4 psig per minute.

e. Release system pressure; remove test equipment; lubricate all threads and replace any components that were removed.

14-61. PNEUMATIC REGULATOR ADJUSTMENT. The pneumatic pressure regulator is adjusted by the manufacturer to provide adequate pressure for the aircraft pneumatic system. The regulator may be checked by removing the fuselage floorboard panel closest to fuselage station 162.60. The regulator is located on the right side of the fuselage. To check for proper operation of the regulator, start one engine and observe pneumatic pressure gauge. The gauge should read 18 psi. The regulated air pressure can be increased by loosening the jam nut on the top of the regulator and turn the adjustment screw clockwise; then tighten jam nut. To decrease pressure the adjustment screw is turned counterclockwise. When proper pressure is set, reconnect the pneumatic line to the regulator outlet port; start one engine and check the pneumatic pressure gauge against that of the test instrument just used. If the reading differs, the pneumatic pressure gauge is inaccurate and should be replaced.

14-62. COMPONENT MAINTENANCE AND REPLACEMENT.

14-63. TIMER. No field maintenance is recommended. See Parts Catalog for replacement or vendor for repairs.

14-64. INSPECTIONS. A ground check of the entire deicer system should be made at least every 100 hours. To permit ground checking the system without engine operation, disconnect the pneumatic system (engine bleed air) line at the engine and connect a hose from shop air to the pneumatic line with air regulated to 22 psig. The system operating pressure is 18 psig.

Before checking the system, all deicers should be inspected for damaged areas and repaired according to the procedure in this section outlining the cold patch or vulcanized repairs. In order to check the system, a deicer piping diagram drawing is necessary to determine the operating pressure and the inflation time allotted to the deicers.

14-65. GROUND PROCEDURE. After the test pressure range is established, connect an external source of air providing this pressure to the test plug. A check valve in the line prevents air from being forced back through the engine bleed air ports. Activate the system and check the operating pressure. The pressure should be within 1 psig of the recommended operating pressure with each inflation.

If the deicers do not reach the operating pressure, check the solenoid valve for proper operation. If the boots deflate slowly, the lines or ejector assembly may be plugged. The system should inflate in approximately 6 seconds.

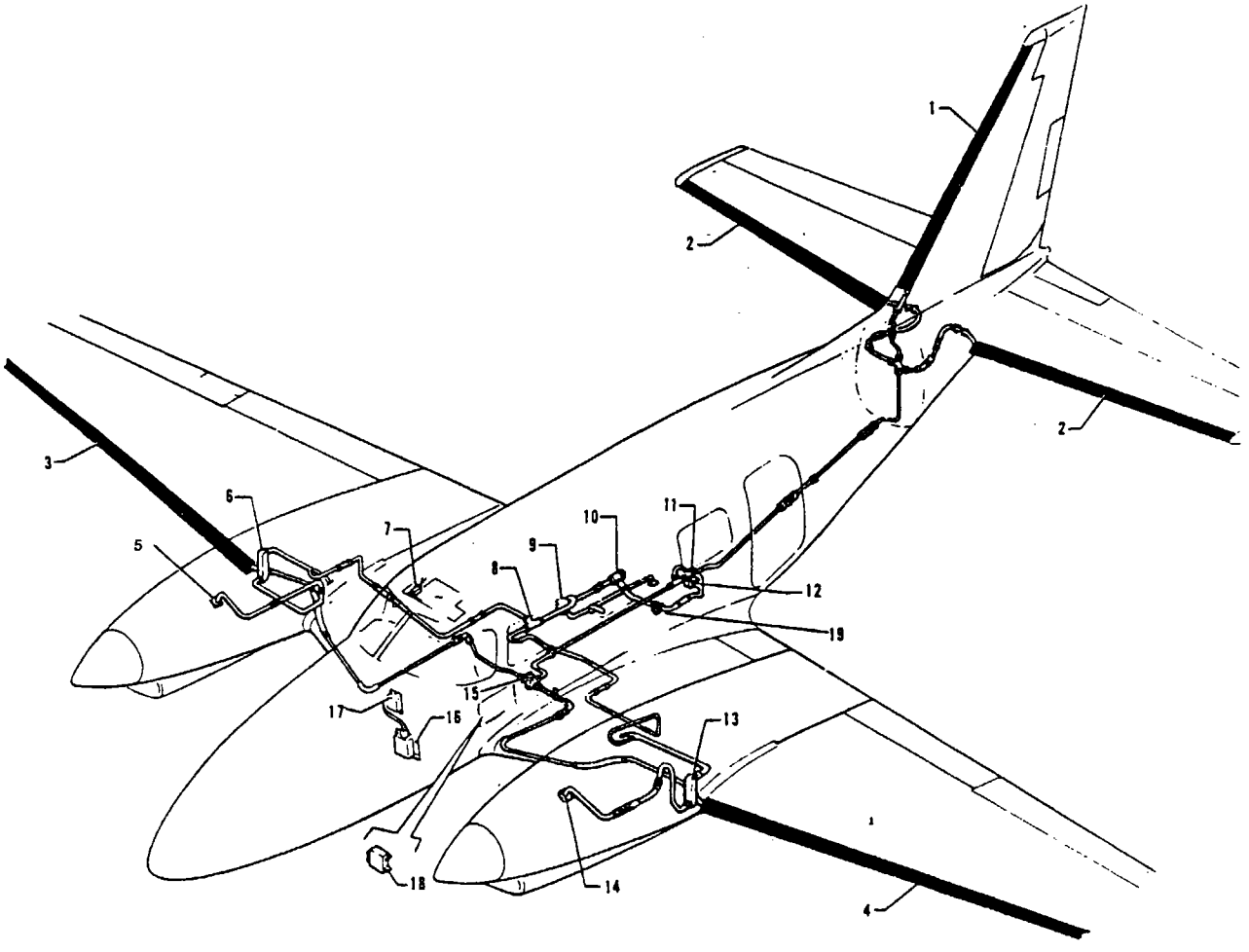

1. DEICER BOOT, VERTICAL FIN
2. DEICER BOOTS, HORIZONTAL STABILIZER
3. DEICER BOOT, RIGHT WING
4. DEICER BOOT, LEFT WING
5. ENGINE BLEED AIR PORT
6. INTERCOOLER ASSEMBLY, RIGHT
7. SWITCH
8. CHECK VALVE
9. ACCUMULATOR ASSEMBLY
10. PRESSURE REGULATOR
11. DEICE EJECTOR ASSEMBLY
12. VALVE, COAXIAL SOLENOID (3-WAY)
13. INTERCOOLER ASSEMBLY, LEFT
14. ENGINE BLEED AIR PORT
15. PRESSURE SWITCH
16. DEICER TIMER
17. DEICER RELAY
18. CIRCUIT BREAKER
19. PRESSURE VALVE

Figure 14-24. Pneumatic Deicer System Installation

TABLE XIV-VII. OPERATING PRESSURES

Recommended Operating Pressure PSIG	Test Pressure in PSIG	
	MIN.	MAX.
15	13	17
18	16	20

14-66. 100-HOUR INSPECTION. At each 100-hour inspection of the airplane, inspect and operate the deicer boots. Make checks as follows:

a. Carefully inspect the deicers for evidence of damage or deterioration and repair or replace damaged boots.

b. Resurface boots which show signs of considerable wear or deterioration.

c. Inspect all hose connections which form a part of the pneumatic deicing system. Replace deteriorated sections of non-kink hose.

d. Check the operation of the boots and the operating pressure of the system as outlined in Paragraph 14-58.

e. If new or replacement boots have been installed, check the tube inflation to make sure that the air connection stems have been properly connected.

f. Disconnect all drain lines in the system and check for proper drainage.

g. Check the on-off control switch for freedom of action. Check associated electric wiring.

14-67. REMOVAL OF BOOTS. The removal of deicer boots should be done in a well ventilated area to avoid difficulty from the fumes of the solvents. Materials required to remove the boots are: Turco 388 or Kelite 21, to remove dried cement, and MEK (Methylethylketone) in squirt can.

NOTE

Disconnect line fittings from boot fittings.

a. Starting at one corner of the upper trailing edge of the deicer, apply a minimum amount of solvent to the seam line while tension is applied to peel back the corner of the deicer.

b. Using a pressure handle squirt can filled with solvent, separate the deicer boot from the surface for a distance of 4 inches all the way along the upper trailing edge.

c. The area between the deicer and the wing which has now been separated will act as a reservoir for the solvent, therefore, the deicer can be pulled down towards the leading edge with a uniform tension.

d. From the centerline of the leading edge to the lower trailing edge of the deicer, use the pressure handle squirt can to soften the bond between the deicer and the wing skin.

e. Use Kelite 21 or Turco 388 to clean the dry cement off the exposed wing area and clean the area thoroughly with MEK (Methylethylketone).

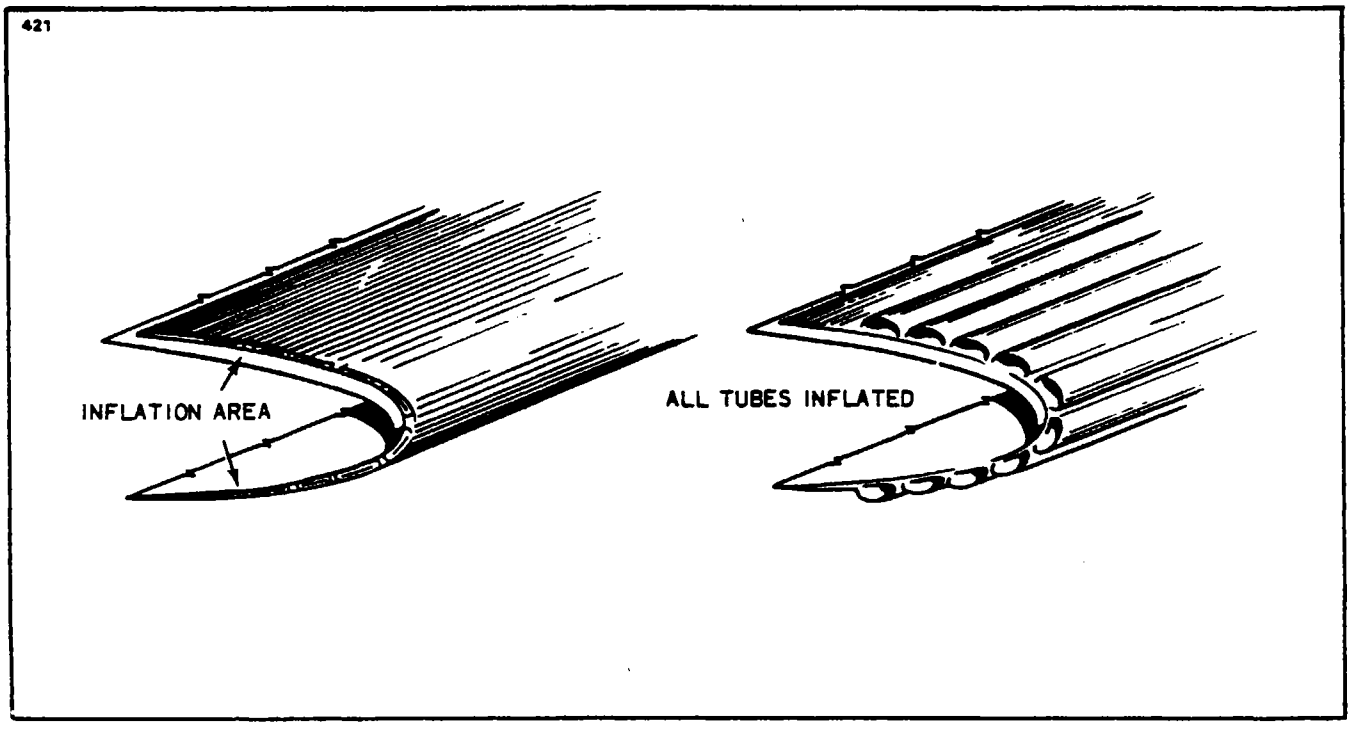

Figure 14-25. Pneumatic Deicer Boots Operation

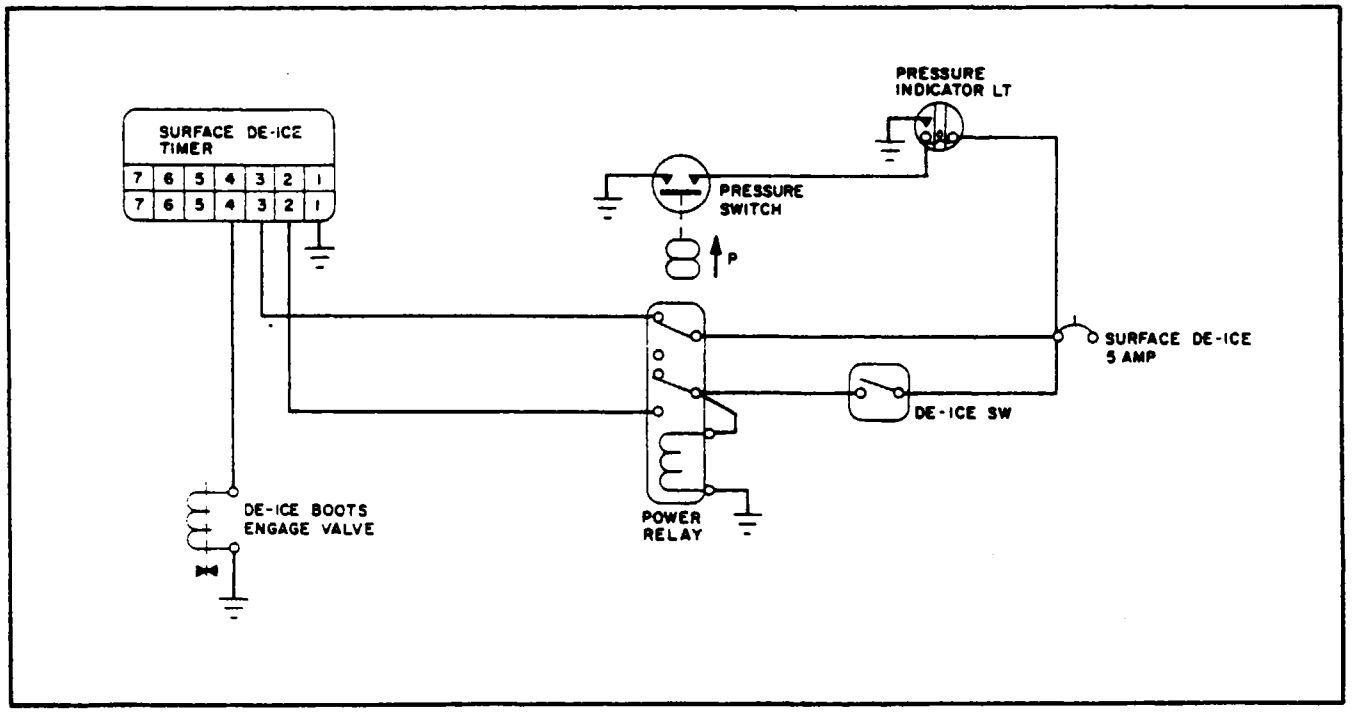

Figure 14-26. Pneumatic Deicer System Schematic

14-68. REPAIR OF BOOTS. Deicer repairs are classified as cold, when made on the boot installed on the airplane, and vulcanized, made on the demounted boot in the shop.

14-69. COLD REPAIR. The materials and supplies for making cold repairs are listed in Table XIV-VIII.

a. SCUFF DAMAGE: This type of damage will be most commonly encountered and, fortunately, it is not necessary in most cases to make a repair. On those rare occasions when the scuff is severe and has caused the removal of the entire thickness of surface ply in spots (the brown natural rubber underneath is exposed), repair the damage using Part No. 74-451-16 and proceed as follows:

1. Clean the area around the damage with a cloth dampened slightly with solvent. Buff the area around the damage with 74-451-75 emery buffing stick so that it is moderately but completely roughened. Wipe the buffed area with a clean cloth slightly dampened with solvent to remove all loose particles.

2. Select a patch of ample size to cover the damaged area. Apply one even thorough coat of cement, Part No. 74-451-20, to the patch and the corresponding damaged area. Allow cement to set a couple of minutes until tacky.

3. Apply the patch to the deicer with an edge, or the center, adhering first. Work down the remainder of the patch carefully to avoid trapping air pockets. Thoroughly roll the patch with stitcher-roller, Part No. 74-451-73, and allow to set for ten to fifteen minutes.

4. Wipe the patch and surrounding area from the center outward with a cloth slightly dampened with solvent. Apply one light coat of A-56-B conductive cement, Part No. 74-451-11, to the patched area.

5. Satisfactory adhesion of patch to deicer will be reached in four hours. Deicer may be inflated for checking repair in a minimum of 20 minutes.

b. TUBE AREA DAMAGE: Repair cuts, tears, or ruptures to the tube area with fabric reinforced patches, Part No. 74-451-16, -17, -18 or -19, depending on size of damage area.

1. Select a patch of ample size to cover the damage and to extend to at least 5/8 inch beyond the ends and edges of the cut or tear. If none of the patches is of proper size, cut one to the size desired from one of the larger patches. If this is done, bevel the edges by cutting with the shears at an angle.

NOTE

These patches are manufactured so that they will stretch in one direction only. Be sure to cut and apply the patch selected so that stretch is in the widthwise direction of the inflatable tubes.

2. Buff the area around the damage with buffing stick, Part No. 74-451-75, so that the surface is thoroughly roughened.

3. Apply the patch to the deicer with the stretch in the widthwise direction of the inflatable tubes, sticking edge of patch in place, working remainder down with slight pulling action so the injury is closed. Do not trap air between patch and deicer surface.

c. LOOSE SURFACE PLY IN DEAD AREA (NON-INFLATABLE AREA): Peel and trim the loose surface ply to the point where the adhesion of surface ply to the deicer is good.

1. Scrub (roughen) area in which surface ply is removed with steel wool. Scrubbing motion must be parallel to cut edge of surface ply to prevent loosening it. Buff the edges of the adjoining surface ply 1/2 inch with 74-451-75 buffing sticks, taper down to the tan rubber ply. Remove loose particles with solvent and rag.

2. Cut a piece of surface ply material, Part No. 74-451-23, to cover the damaged area and extend at least one inch beyond in all directions.

TABLE XIV-VIII. MATERIAL AND SUPPLIES FOR COLD REPAIR

Part No.	Quantity	Description
74-451-C (FSN1650-856-7939)	1	Cold Patch Repair Kit (B. F. Goodrich Co.)
74-451-11	1/2 pt. can	A-56-B Conductive cement
74-451-16	30 pcs.	Small oval patch 1-1/4 x 2-1/2 in.
74-451-17	30 pcs.	Medium oval patch 2-1/2 x 5 inch
74-451-18	10 pcs.	Large oval patch 5 x 10 in.
74-451-19	3 pcs.	Patch 5 x 19 inch.
74-451-20	(2) 1/2 pt.	*No. 4 cement (patching only)
74-451-70	2	Cement brush 1/2 in.
74-451-73	1	1/8 in. Steel stitcher
74-451-75	6	Emery Buffing sticks
74-451-87	1	Buffing Shield

*This cement will give best results with the patches in this kit.

The following items may be procured from the B. F. Goodrich Co., Akron, Ohio, or other manufacturer, as required:

74-451-21	6 ft. roll x 6 in. wide	Type 21 or 22 fillet
74-451-22	15 ft. roll x 2 in. wide	Neoprene coated splicing tape
74-451-23	4 ft. long x 8 in. wide	Neoprene surface ply
74-451-24 (FSN8040-628-4199 and/ or FSN8040-514-1880)	1 quart	†EC-1403 cement and/or EC-1300 L
74-451-74	1	2-1/2 in. sponge rubber roller
74-451-100	1	2 in. dia. x 2-1/2 in. rubber roller

† Minnesota Mining and Manufacturing Company, Adhesives, Coatings & Sealers Div. 3M. 223-6N-02 3M Center. St. Paul. MN 55144 (612) 733-1237

† EC-801 filler compound

TABLE XIV-VIII. MATERIAL AND SUPPLIES FOR COLD REPAIR (cont.)

Part No.	Quantity	Description
The following materials may be obtained from local supply:		
	As required	Toluol Clean, lint-free cloths (preferably cheese cloth)
	Rolls	1 in. masking tape
	1	Sharp knife
	6 ft. long	Steel measuring tape
	1	Fine sharpening stone
	As required	*320 grit emery cloth
	As required	Hypodermic needles (22 gauge or smaller)
Methylethylketone (MEK) can be used instead of Toluol, however MEK causes very rapid drying and provides only 10 seconds working time compared with 40 seconds for Toluol.		

3. Mask off the damaged boot area 1/2 inch larger in length and width than the size of surface ply patch. Apply one coat of cement, Part No. 74-451-11, to damaged area and one coat to patch. Allow cement to set until tacky. Roll the surface ply to the deicer with 2 inch rubber roller, Part No. 74-451-74. Roll edges with stitcher-roller, Part No. 74-451-73. Apply just enough tension on the surface ply when rolling to prevent wrinkling and be careful to prevent trapping air. If air blisters appear after surface ply is applied, remove them with a hypodermic needle.

4. Clean excess cement from deicer with solvent.

d. LOOSE SURFACE PLY IN TUBE AREA: Loose surface ply in tube area is usually an indication of the deicer starting to flex fail. This type of failure is more easily detected in the form of a blister under the surface ply when deicer is pressurized. If this type of damage (or void) is detected while still a small blister (about 1/4 or 3/8 inch diameter) and patched immediately, the service life of the deicer will be appreciably extended. Apply repair patch as outlined in Paragraph a.

e. DAMAGE TO FABRIC BACK PLY OF DEICER DURING REMOVAL: If cement has pulled loose from the wing skin and adhered to the back surface of the deicer, remove it with clean rags and MEK. In those spots where the coating has pulled off the fabric, leaving bare fabric exposed, apply at least two additional coats of cement, Part No. 74-451-24. Allow each coat to dry thoroughly.

14-70. VULCANIZED REPAIR. It is recommended that vulcanized repairs be made by an approved Deicer Installation Station. The prime purpose of making vulcanized repairs is to make the deicer completely fit for further service. Careful consideration must be given to the overall condition of the deicer. If large parts of the stretch area of a deicer are cracked or checked to a depth of over 0.005 inch, no attempt to repair should be made. Deicers with occasional slight checks in the stretch area may be given a coating of conductive cement to make them serviceable. If the checking is rather deep but restricted to a

TABLE XIV-IX. MATERIALS FOR VULCANIZED REPAIRS

Part No.	Description	Qty.
74-451-B	SUPPORT KIT, High pressure Deicer vulcanized repairs	1
74-451-B-1	. MATERIALS KIT	1
74-451-2	. . NON-STRETCH FABRIC, Uncured rubber coated	15 ft. x 8 in.
74-451-3	. . FABRIC TAPE, Uncured rubber coated	15 ft. x 1 in.
74-451-4	. . TUBE FABRIC, Uncured	15 ft. x 8 in.
74-451-5	. . GUM, 0.005 Uncured	15 ft. x 2-3/4 in.
74-451-6	. . GUM, 0.020 Uncured	15 ft. x 8 in.
74-451-7	. . TREATED PAPER, Holland or silicone	30 ft. x 8 in.
74-451-8	. . VULCANIZING CEMENT, No. 60	1 qt.
74-451-9	. . VULCANIZING CEMENT, No. 61	1 qt.
74-451-10	. . SOAPSTONE	1 qt.
74-451-11	. . CONDUCTIVE CEMENT, *A-56-B	1/2 pt.
74-451-12	. . *NEOPRENE PUTTY	1/2 pt.

*These cements have an extended shelf line if kept under refrigeration from 0° to 40°F.

small area, the deicer may be made serviceable by repairing the damaged area. Deicers which have been swelled or softened by contact with oil or other harmful agents, should be scrapped. Injuries will vary from minor ripping of the tube or stretch areas which may make repair exceedingly difficult or actually impossible. The determination of just where this division between repairable and unrepairable damage exists will, of necessity, depend upon the careful judgment of the inspector and upon the experience and training of the workman.

14-71. MATERIALS FOR VULCANIZED REPAIRS. The effectiveness of any repair largely depends upon an analysis of the damage and the selection of correct repair material. Deicers are compounded to resist sunlight and weather and retain flexibility. It is recommended that only materials as listed in Table XIV-IX be used in making vulcanized repairs. They are sufficient to supply a one or two man unit for a period of from four to six weeks, repairing deicers with the average amount of miscellaneous types of repairs. Select materials specified for making each repair and avoid substitution. Since many of the materials are dusted with soapstone, wash all materials carefully with washing or cleaning solvent before using. Table XIV-X lists the tools and equipment which have been found suitable for repair work. They are designed for a one or two man repair unit.

14-72. DEFINITION OF TERMS. Terms used in the following instructions are explained below:

a. Wash - to clean a surface by means of a clean cloth moistened with Toluol or MEK. (Benzine or non-leaded gas may be used in place of cleaning solvent.) Do not permit free solvents to remain on any surfaces.

b. Route - to remove rubber surfaces around area to be repaired with a hex nut on a shaft attached to electric buffer.

c. Buff - to roughen surfaces with Carborundum buffing sticks or abrasive paper.

d. Cement - to apply two light coats of fifty-fifty mixture of No. 60 and 61 vulcanizing cements, unless otherwise specified. Let each coat dry before proceeding.

e. Gum - uncured rubber stock. If cured stock is to be used, it will be so stated.

f. Face Side of Deicer - the side exposed when installed; the conductive surface side.

g. Restore Conductive Surface - after curing a repair on the surface size; apply two coats of A-56-B conductive cement.

NOTE

Do not apply A-56-B conductive cement in any area of any electrical transmitting or receiving equipment.

h. Stitch - to force fabrics or gum elements together with metal or rubber roller; stitch from the center toward the edges to prevent trapping air between the elements.

14-73. GENERAL PROCEDURE. Select a repair room with adequate ventilation and air free of dust and foreign matter. Keep the work bench clean so that foreign objects will not contaminate cement, solvents, or damage deicers, and perform the following steps:

a. Before starting a vulcanized repair, thoroughly clean a fairly large area surrounding the damaged portion, as well as the damage portion itself, of any grease, dirt or talc. Use a neutral soap and water solution; rinse clean and dry with clean cloth.

b. Immediately around area to be repaired, wash carefully with clean cloth moistened in Toluol or Methylethylketone (MEK) Federal Specification TT-M-261.

c. When routing around a deicer injury, remove or cover all cement containers so that dust particles flying from grinding stone will not contaminate the cement.

d. After buffing or routing an area, remove all dust from the surface of deicer and table.

e. Protect all completed repairs from dust and dirt with a clean piece of holland cloth. Hold holland in place with masking tape. Remove masking tape before curing.

f. Release all air trapped between gum and fabric surfaces and/or deicer surfaces by inserting a hypodermic needle through the ply to the air pocket.

g. Before vulcanizing, remove all excess cement and dust particles by washing with solvent.

h. Use clean brushes when making repairs. Oil, paint, or other residue may impair adhesion. Clean cement brushes with Benzine or non-leaded gasoline at end of each work day.

i. Use approved safety can for Toluol or MEK. Take screen and spring out of solvent cans before filling so that all sediment may be removed.

j. Cements should be of such a consistency that they can be applied in a thin smooth coating. If they are partially set up or lumpy, addition of the proper solvent may restore their usable characteristics. Otherwise, do not use.

k. Do not attempt repairs in temperatures under 40°F with listed materials.

l. When humidity is high, moisture may form on freshly washed or cemented areas. If this condition occurs, wipe moisture off with a clean cloth slightly dampened in solvent before proceeding with repair.

m. If but a small area is involved in repair, and temperature or drying conditions are prohibitive, a small canopy erected over the area, under which a lighted electric light bulb is placed, may make repair possible.

n. When repairing deicers, cleanliness is of prime importance. Keep materials, tools, equipment, and hands clean at all times.

14-74. CURING. The vulcanizer listed in Table XIV-X is adjusted at the factory to heat to 285° ± 5°F with the line voltage as specified on the name plate. All curing times called for in this manual are for 285°F. If line voltage is low, the vulcanizer will not heat to 285°F, and, therefore, curing times must be longer than specified.

Since the curing time varies with the type and position of repair being cured, the times are given for each specified type of repair. Cure repairs as follows:

TABLE XIV-X. EQUIPMENT AND TOOLS FOR VULCANIZED REPAIRS

Part No.	Description	Qty
74-451-B	SUPPLY KIT, High pressure Deicer vulcanized repairs	1
74-451-B-2	. Tool Kit, Complete	1
74-451-B-3	. . Tool Kit, Special	1
74-451-40	. . . VULCANIZER, Large 2-1/2 x 8	1
74-451-41	. . . PADS, Sponge rubber, 3-1/2 x 11	3
74-451-42	. . . CURING METAL, 6 x 10	2
74-451-B-4	. . Tool Kit, Standard	1
74-451-70	. . . BRUSH, Cement, 1/2 in.	2
74-451-71	. . . BRUSH, Cement (Artist)	2
74-451-72	. . . SHEARS, 10 in.	1
74-451-73	. . . STITCHER, 1/8 in. Steel	1
74-451-74	. . . ROLL, Sponge rubber 2-1/2 in.	1
74-451-75	. . . STICKS, Emery buffing	6
74-451-76	. . . KNIFE HANDLE	1
74-451-77	. . . KNIFE BLADE	3
74-451-78	. . . WHETTING STONE	1
74-451-79	. . . HYPODERMIC NEEDLE	6
74-451-80	. . . ELECTRIC BUFFER	1
74-451-81	. . . MANDREL (for felt wheels)	3
74-451-82	. . . WHEELS (felt buffing)	24
74-451-83	. . . STONE, Grinding, pointed	3
74-451-84	. . . STONE, Grinding, flat	4
74-451-85	. . . NUT, Hex	3

NOTE

Over-curing destroys the flexibility of the deicer. Under-curing prevents the proper bond from taking place. Therefore, always watch cure time and temperature carefully.

a. Preheat vulcanizer.
b. Place sponge pad over bottom of unheated plate.
c. Place a piece of clean, unwrinkled (or silicone treated paper) over sponge pad; then place deicer in position over holland, with area to be cured centrally located over bottom platen. (Repair side up.)
d. Place another piece of smooth, clean holland over spot to be cured.

NOTE

If holland or silicone treated paper is not available, spread a thin coat of soapy water over surfaces of metal curing sheet and sponge pad. Allow to dry thoroughly. This will prevent sticking.

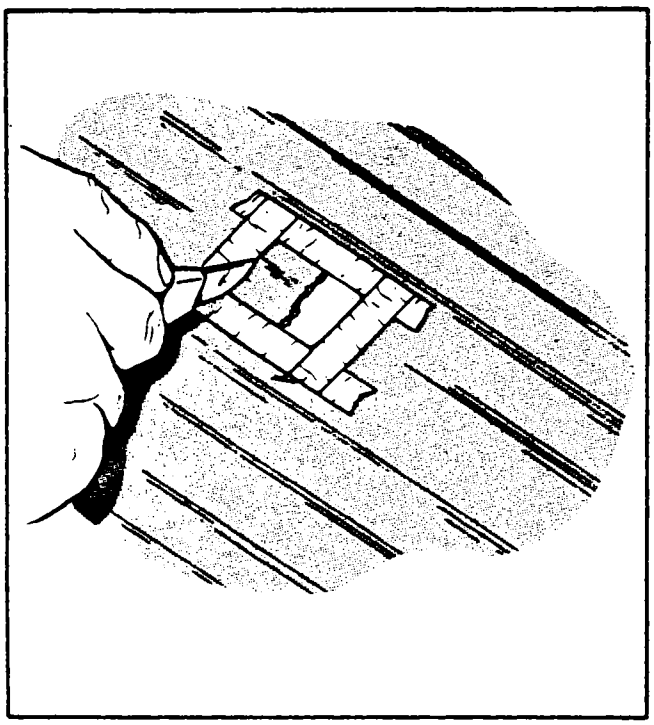

Figure 14-27. Marking and Cutting Scuff

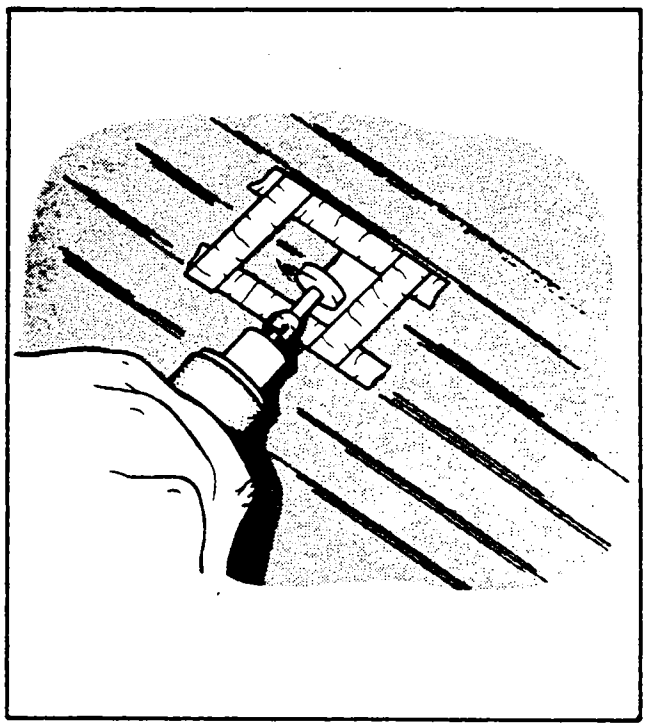

Figure 14-28. Routing Scuff

e. Place a metal curing sheet over holland and clamp heating element in place. The size of the metal curing plate must be at least one inch larger overall than the heating plate. Tighten heater by hand firmly but not excessively.

f. Cure for full time as given for each type of repair.

g. Test each repair thoroughly after it has cured to determine if fully cured. Test also the strength and soundness of repair. If, in the stretch or other area (except tube), flex and stretch the area by hand several times, and then carefully examine for soundness. If in a tube, inflate to 25 psig.

14-75. SURFACE SCUFFS. Repair as follows:

a. Wash surface to be restored and apply one coat of conductive cement. Allow to dry thoroughly. Add another coat and allow to dry. Dip finger in conductive cement solvent (Isopropyl Acetate) and rub down with light circular movement. Do not allow finger to become dry.

b. Wipe surface lightly with cloth moistened in Isopropyl Acetate.

c. Inspect for high or low places. High places require additional rubbing down. For low spots, repeat the last three steps.

d. Allow to dry thoroughly and dust lightly with soapstone.

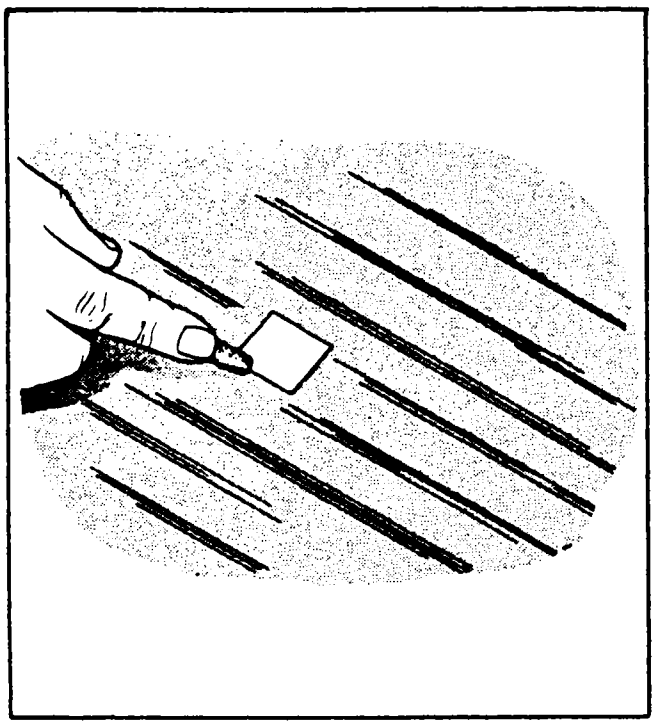

Figure 14-29. Buffing Edge of Repair

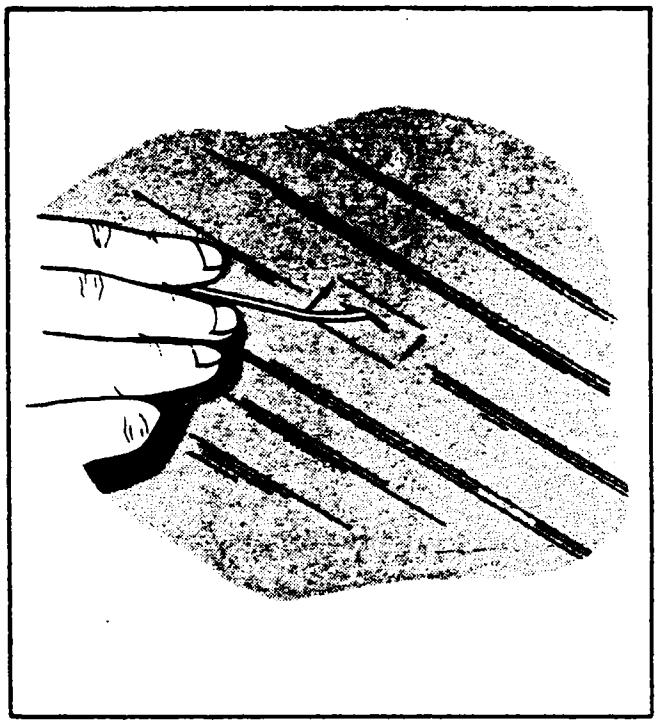

Figure 14-30. Hole Through Surface of Tube

14-76. DEEP SCUFF THROUGH NEOPRENE SURFACE.

a. Mark off area to be routed and carefully cut the 0.010 inch Neoprene surface ply with knife. This will prevent the surface ply from peeling beyond the area marked when using buffer. Area should include full width of tube and approximately 1/2 inch beyond scuff.

b. Using buffer, route down until pits are removed. Buff 1/8 around outer edge of routed area. Mask off outside of buffed area and cement.

c. Using mill knife or putty knife, apply Neoprene putty, filling cavity flush with surface. Make sure cavity is completely filled. Remove masking tape and cure for 20 minutes.

d. Restore conductive surface. (Refer to Paragraph 14-89.)

14-77. HOLES OR TEARS THROUGH SURFACE SIDE OF TUBE AREA. Repair as follows:

a. Mark off area to be routed and carefully cut the 0.010 inch surface ply with knife. This will prevent the surface ply from peeling beyond the area marked when using buffer. Area should include full width of tube and approximately 1/2 inch beyond cut.

b. Using buffer, route down to tube fabric. Extreme care should be taken while using buffer so that surface ply beyond repair area is not loosened, and tube fabric is not injured. Wash out area.

c. Cut tube fabric patch slightly larger than size of cavity, making sure that stretch of fabric is across width of tube.

d. Cement buffed area and contact surface of tube fabric patch. Apply tube fabric full size of cavity and stitch. Remove any trapped air using hypodermic needle. Roll up a small piece of 0.005 inch gum (about 1/32 inch diameter and 3/4 inch long) and work in around edge of tube fabric using a sharp pointed object, such as shears. Stitch gum well and cure for 20 minutes.

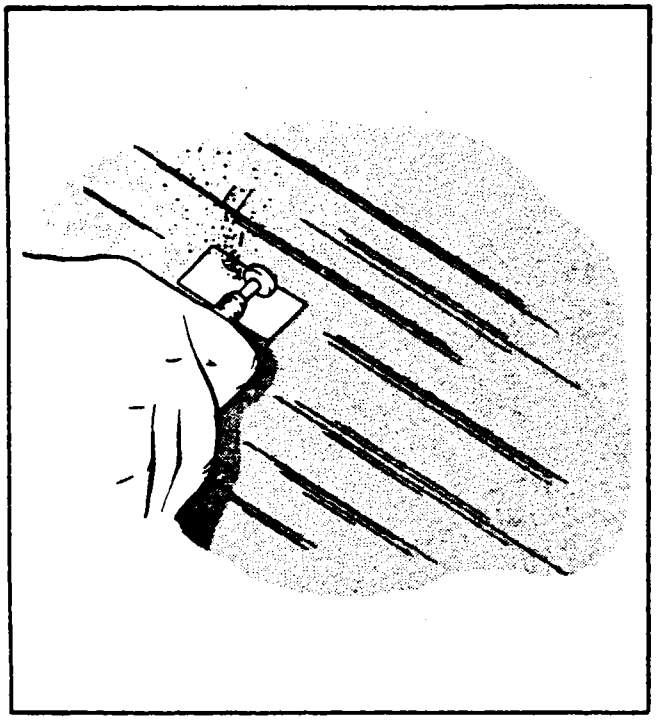

Figure 14-31. Routing to Tube Fabric

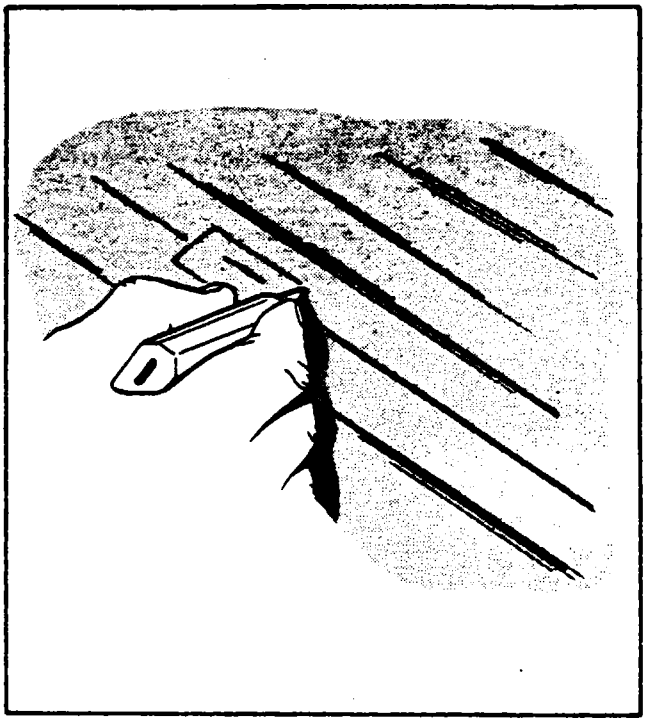

Figure 14-32. Cutting Surface of Tube

e. After cure, using Carborundum stick, scratch shine off gun and buff surface ply 1/8 inch around repair. Wash repaired area and apply cement.

f. Mask off 1/16 inch beyond repair. Using mill knife or putty knife, apply Neoprene putty, filling cavity flush with surface. Make sure cavity is completely filled. Remove masking tape and cure for 15 to 20 minutes.

g. Restore conductive surface. (Refer to Paragraph 14-89.)

14-78. HOLES OR TEARS THROUGH BACKSIDE OF TUBE AREA. Repair as follows:

a. Route off coating down to fabric at least 3/4 inch beyond cut and wash thoroughly, entire buffed area and cement.

b. Cut fabric patch; wash and cement; then apply fabric patch and stitch. Remove any trapped air using hypodermic needle.

c. Wash and cement repaired area; then apply a thin coat of Neoprene putty with mill knife and cure for 22 minutes.

14-79. HOLES OR TEARS THROUGH TWO SIDES. Repair one side at a time in accordance with Paragraphs 14-77 thru 14-78.

14-80. HOLE THROUGH DEICER EXTENDING FROM ONE TUBE INTO ANOTHER. Repair as follows:

a. Route and buff one side at a time as described in Paragraphs d and e.

b. Working on surface side, remove in between tube tape 3/4 inch each direction from tear. Route out in between tube fillet. Do not damage tube fabric wall.

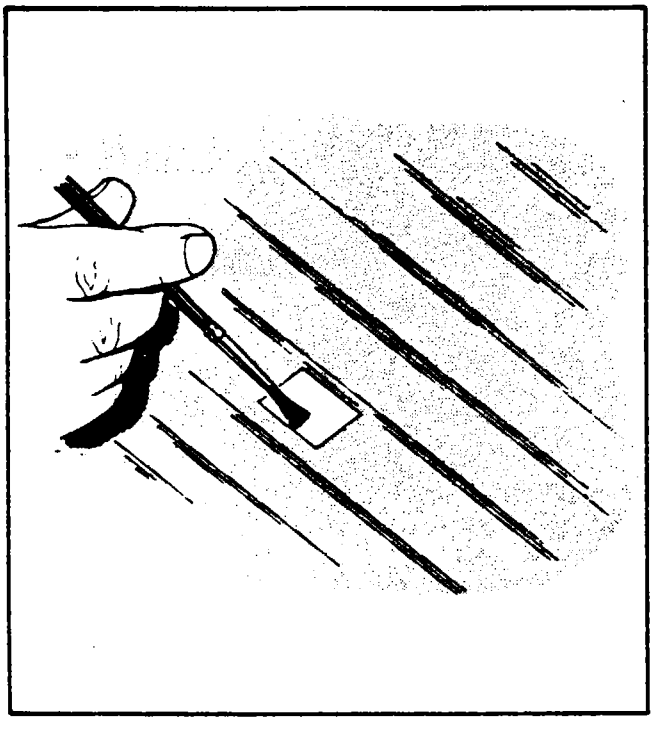

Figure 14-33. Cementing Buffed Area and Patch

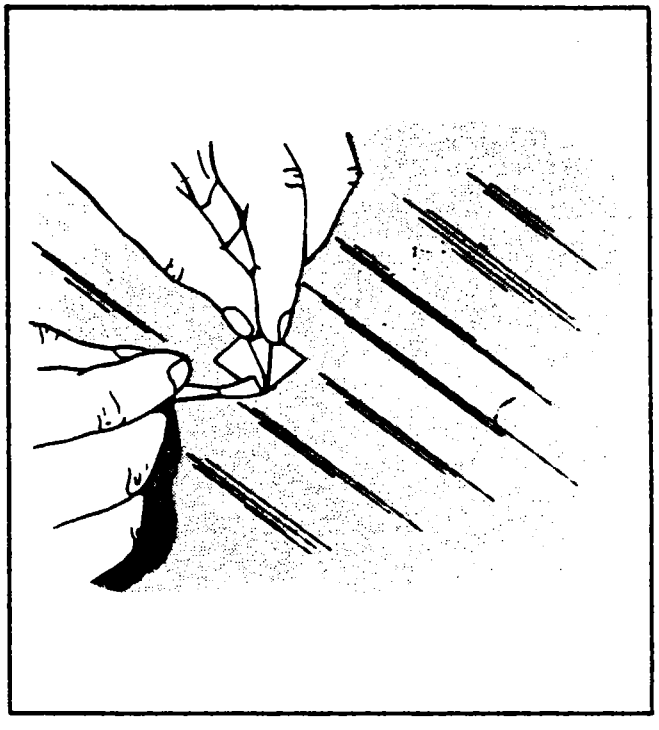

Figure 14-34. Applying and Stitching Fabric

c. Slit fabric on backside of deicer in between tubes 3/4 inch beyond tear.

d. Cut two fabric patches large enough to extend 1/2 inch beyond tear. Stretch of fabric patches must be with width of tube.

e. Wash and cement entire buffed area of deicer and one side of fabric patches.

f. Apply patches, one for each tube, inserting each patch through slit with uncemented sides of patches back to back. Then stitch each patch to surface side first; tension other ends slightly and stitch in place on backside.

g. Wash and cement exposed surfaces of fabric patches.

h. Replace gum in between tubes and apply patch to backside.

i. On surface side, mask off the repaired area and fill flush with Neoprene putty.

j. Cure surface side first for 22 minutes; then the backside for 10 minutes.

k. Restore conductive surface on surface side of boot. (Refer to Paragraph 14-89.)

14-81. HOLE THROUGH DEICER OUTSIDE OF TUBE AREA. Repair as follows:

a. Repair surface side as described in Paragraph d. Then, patch backside as described in Paragraph 14-78 and cure complete repair for 22 minutes. Now, restore conductive surface. (Refer to Paragraph 14-89.)

14-82. INSTALLATION. The following procedure for installing deicers assume that the airplane has provisions for air connections, etc.

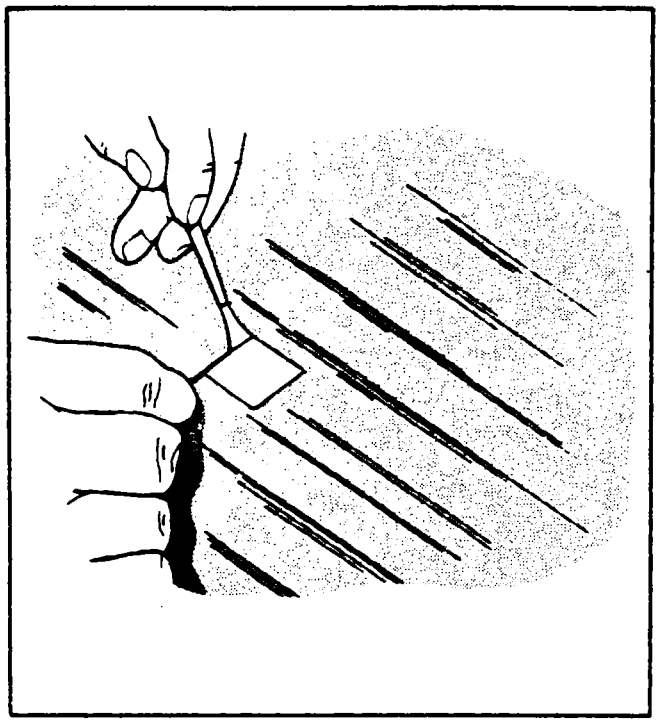

Figure 14-35. Placing and Stitching Gum

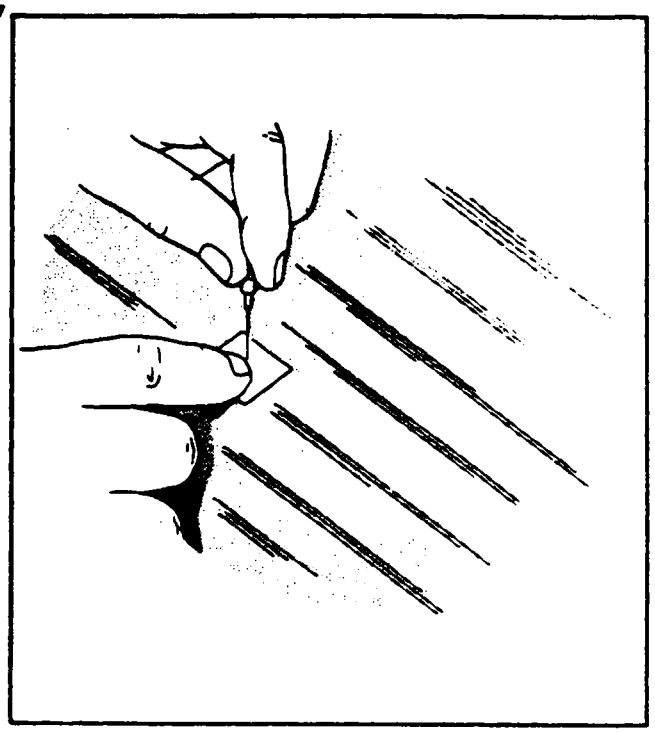

Figure 14-36. Removing Trapped Air

14-83. PREPARATION OF LEADING EDGES. If the leading edges are painted, remove all paint including zinc chromate primer.

a. With one inch (1) masking tape, mask off leading edge boot area, following 1/2 inch margin for non-recessed boots. Take care to mask accurately, thus eliminating the need for cleaning off excess cement later.

b. Clean the metal surfaces thoroughly, at least twice, with MEK or acetone. For final cleaning, wipe the solvent film off quickly with a clean dry cloth before it has time to dry.

NOTE

If desired, zinc chromate primer may be reapplied over bare leading edges. When hard, scuff sand chromate surfaces; then clean before application of cement.

NOTE

It is permissible to install deicers on alodined or anodized surfaces.

c. Fill gaps of skin splices that lead under deicers with sealing compound EC-801.

d. Remove the sump plugs from the air connection grommets. In some cases, it will be necessary to remove sections of doped fabric used to cover the air connection holes. Draw out the ends of the non-kink hose section so that they protrude through the connection holes in the leading edge. If hose is cracked or deteriorated, replace with new hose.

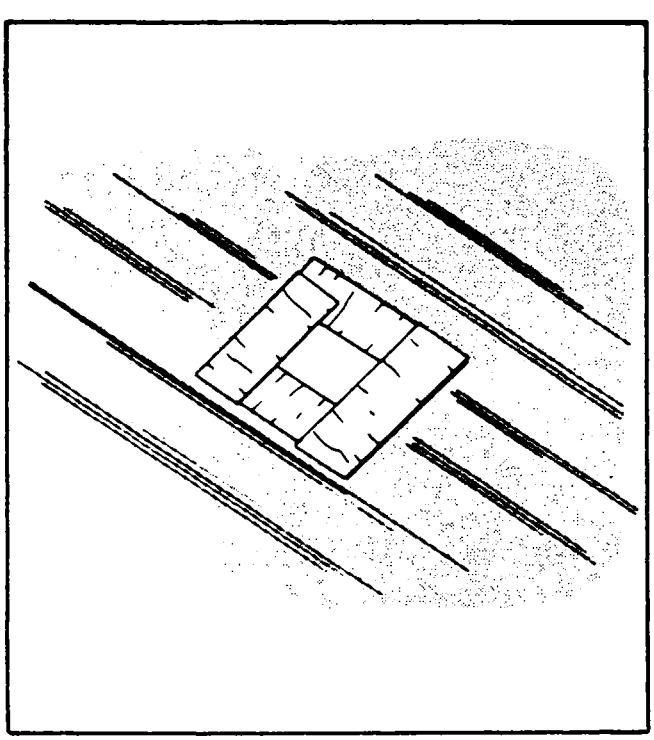

Figure 14-37. Masking Repair

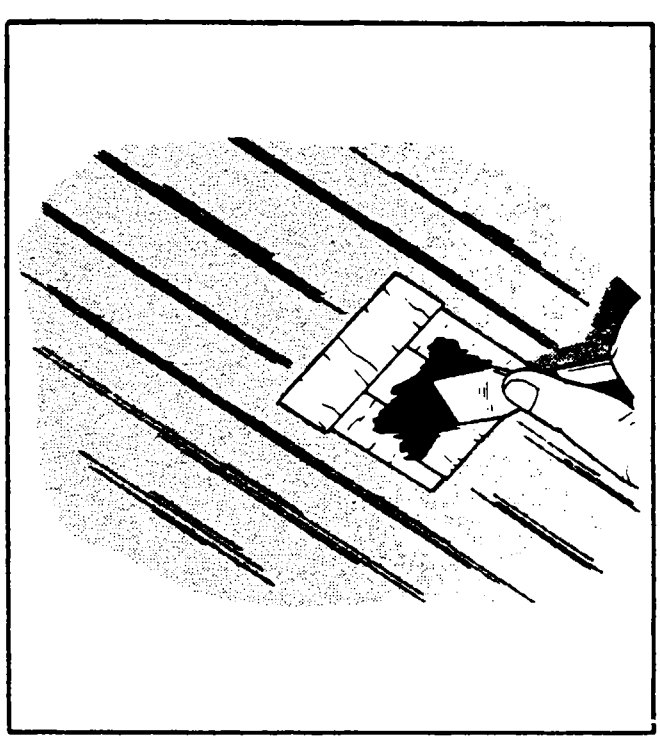

Figure 14-38. Applying Neoprene Putty

14-84. PREPARATION OF DEICER. Moisten a clean cloth with MEK or acetone and carefully clean the rough, back surface of the boot at least twice. Change cloths frequently to avoid recontamination of the cleaned areas.

14-85. MOUNTING DEICER ON LEADING EDGE. Thoroughly mix EC-1300L cement before using. Apply one even brush coat to the cleaned back surface of the boot and to the cleaned metal surface. Allow the cement to air dry for a minimum of one hour. Apply a second coat to both surfaces and allow to air dry a minimum of one hour. Ambient temperature for installation should be held between 40° and 110°F. However, longer drying time of the cement coats may be required as the humidity approaches 99%. Deicer and leading edge may be cemented for a maximum of 48 hours before actual installation, if cemented parts are covered and kept clean.

Snap a chalk line along the leading edge of the airfoil section. Intensify chalk line on leading edge and the white reference line on the boot with a ball point pen. Most boots are made with an excess of material at the inboard and outboard edges for final trimming after installation and some recessed boots trim on the upper and lower edges.

Securely attach hose to deicer connections using clamps or safety wire.

a. Holding the backside of the boot close to the leading edge, fasten the end of each non-kink hose to the corresponding air connection stem. Tinnerman or other suitable non-kink hose clamps should be used for this purpose. Tighten each clamp with a pair of slip joint pliers but do not squeeze the clamp so tight that the hose is damaged.

NOTE

If non-kink hose clamps are not available, wrap each hose connection with several turns of friction tape. Over the tape wrap two separate bindings of safety wire, about 1/2 inch apart. Each of these bindings should consist of several turns of wire. Twist together the ends of each binding to tighten. Press the twisted ends down against the hose. Finally, wrap the wire with several additional turns of friction tape.

b. Push the hose connections into the leading edge grommets or seals, as the case may be. Obtain sufficient personnel to hold boot steadv during installation. (Limit handling cemented side of boot with fingers.) Continue installation by reactivating the cement along the centerline leading edge surface and boot in spanwise strips approximately 6 inches wide. Rubber roll the deicer firmly against the wing leading edge, being careful not to trap any air under the deicer. Always roll parallel to the inflatable tubes. Position the deicer centerline to coincide with leading edge centerline. Hold boot in this position while reactivating about 3 inches around connections and around corresponding holes in leading edge, using a clean lint-free cloth moistened with Toluol. Insert connections in leading edge holes when cement has dried to a tacky state and rubber roll boot to leading edge in tackified area.

c. If the deicer should attach "off course," use MEK to remove and reposition properly. Avoid twisting or sharp bending of the deicer.

d. Rubber roll, apply pressure over entire surface of the deicer. All rolling should be done parallel to the inflatable tubes. Roll trailing edges with a narrow stitcher-roller.

CAUTION

Avoid excessive soaking or rubbing of the cement which could remove the cement from the surface.

Remove all masking tapes and clean surfaces carefully with Toluol so that no solvent will run under deicer edges.

e. Apply masking tape to deicer edges where exposed trimmed ends or gaps between sections are to be filled with MMM EC-801 sealing compound.

Apply masking tape to deicer approximately 1/4 inch in from trailing edges and tape wing skin approximately 1/4 inch from trailing edges, both forming a neat, straight line.

f. Apply a brush coat of A-56-B cement to surfaces between tapes and to EC-801 seams, being sure that the conductive coating (A-56-B) is continuous from the deicer surface to the wing painted surface.

g. Remove taps immediately after applying A-56-B cement (before cement dries).

NOTE

Application of A-56-B conductive cement is not necessary on deicers that have "CONDUCTIVE" noted on labels.

CAUTION

The cements and solvents used for installation are flammable and their fumes slightly toxic. Therefore, all work should be done in a well ventilated area away from any sparks or flames. (Use of solvent resistant type gloves is recommended.)

In the event it becomes necessary to remove or loosen installed boots, use Toluol to soften the "adhesion" line. A minimum of this solvent should be applied to the seam line while tension is applied to peel back the boot. This removal should be slow enough to allow the solvent to undercut the cement, thus preventing injury to the part. Excessive quantities of solvent must be avoided.

14-86. ADHESION TEST. Using excess boot material trimmed from the ends of any wing and empennage deicers, prepare one test specimen for each deicer installed. This specimen should be a 1 x 8 inch full thickness strip of boot material cemented to the wing skin adjacent to installed boot following the identical procedure used for installation. Leave one inch of the strip uncemented to attach a clamp. Four hours or more after the installation, attach a spring scale to the uncemented end of each strip and measure the force required to remove strip at the rate of one inch per minute. The pull should be applied 180° to the surface. (Strip doubled back on itself.)

A minimum of five pounds tension (pull) shall be required to remove the test strip. If less than five pounds is required, then acceptability of the boot adhesion shall be based on the following tests:

a. Carefully lift one corner of boot in question sufficiently to attach a spring clamp.

b. Attach a spring scale to this clamp and pull with force 180° to the surface and in such a direction that the boot tends to be removed on the diagonal.

c. If a force of five pounds per inch of width can be exerted under these conditions, the installation shall be considered satisfactory. Remember, the width increases as the corner peels back.

d. Re-cement corner following previous procedure:

e. Failure to meet this requirement shall result in reinstallation of the boot.

NOTE

Possible reasons for failure are: dirty surfaces, cement not reactivated properly, cement not mixed thoroughly. Corrosion of the metal skin may occur if good adhesion is not attained, especially around rivet heads and metal skin splices.

If these adhesion requirements are met, the airplane may be flown immediately. Do not inflate deicers within 12 hours of installation or until adhesion strength of 8 to 10 pounds is obtained.

14-87. MAINTENANCE. Clean deicers when the airplane is washed with a mild soap and water solution. In cold weather, wash the boots with the airplane inside a warm hangar if possible. If the cleaning is to be done outdoors, heat the soap and water solution before taking it out to the airplane. If difficultv is encountered with the water freezing on the boots, direct a blast of warm air along the region being cleaned, using a portable type ground heater.

As alternates, use Benzol or non-leaded gasoline. Moisten the cleaning cloth in solvent, scrub lightly, and then, with a clean, dry cloth, wipe dry so that the cleaner does not have time to soak into the rubber. Petroleum products such as these are injurious to rubber and, therefore, should be used sparingly.

14-88. AGEMASTER NO. 1 AND ICEX APPLICATION. Agemaster No. 1 and Icex are chemical treatments that will, when properly applied, increase the life and efficiency of the deicer boots. Although not required, it is recommended that both Agemaster and Icex treatments be applied when treating boots.

Agemaster No. 1 is a chemical treatment that penetrates and bonds to the rubber surface, protecting them effectively from ozone attack and premature deterioration. To insure proper protection of the deicer boots, Agemaster No. 1 should be applied at 150 flight hour intervals and prior to the application of Icex.

Icex is a specially compounded silicone base material which effectively reduces the adhesion of ice to rubber. This compound was developed for use on deicer boots, rubber abrasion boots and other rubber surfaces. When properly applied and renewed (at 150 flight hour intervals) Icex will provide a smooth polished film that evens out the microscopic irregularities on the rubber surfaces to assist the boots in removing ice quickly and cleanly. Agemaster No. 1 and Icex are applied as follows:

a. There are four approved methods of applying Agemaster No. 1, brushing, swabbing, rolling and dipping (prior to boot installation).

WARNING

Agemaster should never be sprayed as aeration will occur causing an extreme fire hazard as well as the loss of vital compounds needed for the protective agents to penetrate the rubber. Container should be kept tightly closed when not in use. Apply Agemaster only in a well ventilated area.

1. Thoroughly clean the boot surfaces of oil, grease and wax with mild soap and water solution.
2. Rinse boots with clean water to ensure that all soap is removed.

NOTE

Ensure all soap is removed from under the leading edges.

3. To prevent staining the surfaces, adjacent to the boots, mask around each edge of the boot being treated.

NOTE

To ensure proper treatment of the boots, a minimum of two coats of Agemaster No. 1 is required. A total of 0.75 fluid ounces per square foot (200 millimeters per square meter) should be applied. One gallon will treat approximately 150 to 170 square feet (14 to 18 square meters).

4. Of the four application methods mentioned above, swabbing is the preferred method for installed deicer boots. If the swabbing method is selected, plastic or rubber gloves should be used to prevent the staining of the skin. Apply Agemaster by moistening a two inch by four inch swab of lint-free cloth and rub into the boot surface with smooth uniform strokes. The swab should be kept wet but not dripping. Cover the surface evenly and completely. Allow the first coat to dry five to ten minutes before applying a second coat.

5. If the brush or roller method is to be used, apply a single heavy coat at the rate of 0.4 to 0.5 fluid ounces per square feet (130 to 160 millimeters per square meter) using three inch trim roller. Cover the surface completely and evenly and allow to dry five to ten minutes. A second coat may be applied after the first coat has dried thoroughly.

6. If the boots are to be handled, allow to dry for at least 30 to 40 minutes before doing so. Allow boots to dry for a minimum of 24 hours before applying Icex.

b. Icex like Agemaster, is best applied using the swabbing method. Application of Icex should be made whenever the boots require treatment (approximately every 150 flight hours). It is recommended that Icex be applied only after the boots have been treated with Agemaster No. 1.

1. When applying Icex with a swab apply in a continuous back and forth (spanwise) motion.

2. If Icex is to be applied without first applying Agemaster No. 1 thoroughly clean the deicer boots with a mild soap and water solution. Isopropyl alcohol may be used sparingly on stubborn stains. However, after using alcohol the surface must again be cleaned with a mild soap and water solution. After cleaning the boots, thoroughly rinse with clean water and allow to dry completely. Apply Icex as described previously (one quart will cover approximately 500 square feet or 46 square meters).

NOTE

It should be noted that Icex is not a cure-all for icing problems in that it will not prevent or remove ice formations nor will it effectively protect against ozone attack. Its only function is to prevent ice from strongly adhering to the rubber boots allowing easy and efficient removal.

Too heavy an application of Icex will result in a sticky surface and cause dirt and dust to collect on the boot reducing the efficiency of the Icex and the boot.

14-89. RESURFACING CONDUCTIVE CEMENT. The following materials are required to remove and replace the old, damaged coating:

a. Fine grit sandpaper.
b. Two inch paint brush.
c. One inch masking tape.
d. Conductive Neoprene cement, No. A-56-B, B.F. Goodrich Co.
e. Isopropyl Acetate, Federal Specification TT-I-720, as cleaning or thinning solvent.
f. Alternate solvent - (Toluol or Toluene may be used as an alternate for Isopropyl Acetate).

CAUTION

Cements and solvents used for resurfacing are flammable and their fumes slightly toxic. Therefore, all work should be done in a well ventilated area away from any sparks or flames.

During cold weather, place the airplane in a warm hangar and locate so that the boots are in line with one or more blast heaters. Do resurfacing before any other work on the airplane to allow as much time as possible for the new coat to cure.

NOTE

If, for some reason the resurfacing cannot be done indoors, it may be deferred at the discretion of the inspector, until a warm, clear day permits the work to be satisfactorily accomplished outdoors. However, if the deicers are in such condition that immediate resurfacing is required, remove them from the airplane and resurface in a shop.

Clean deicer thoroughly with Isopropyl Acetate.

a. Roughen entire surface of boot, using a fine grit sandpaper.
b. Clean surface again with clean, lint-free cloth moistened with cleaning solvent.
c. Apply masking tape beyond upper and lower trailing edges, leaving a 1/4 inch gap of bare metal.
d. Mask off any legible deicer brands.
e. Apply one brush coat of A-56-B cement to deicer and allow to dry at least one hour. Then apply second coat and allow to dry at least four hours before operating deicers. Plane may be flown as soon as cement is dry.

NOTE

If A-56-B cement has aged 3 months or over, it may be necessary to dilute the cement with Isopropyl Acetate to obtain proper brushing consistency. Mix thoroughly, approximately 5 parts cement to one part Isopropyl Acetate.

THIS SPACE INTENTIONALLY LEFT BLANK

TABLE XIV-XI. TROUBLESHOOTING PNEUMATIC DEICER SYSTEM

Trouble	Cause	Remedy
Deicers do not inflate. Both engines operating at minimum cruise RPM or either engine at 1600 propeller RPM.	Open circuit breaker.	Push circuit breaker to reset.
	System connection loose or wire broken.	Tighten or repair as required.
	Timer not functioning.	Test or replace as required.
	Control valves not functioning.	Make electrical test. Check for sticking poppet. Clean.
	Lines blocked or not connected.	Blow out lines and inspect connections. Make air leakage test.
Deicers inflate slowly (Inflation time - 6 seconds.)	Lines partially blocked or not connected securely.	Blow out lines and inspect connections. Make air leakage test.
	Deicer valve not functioning.	Check fitting in Deicer port for proper installation.
	System pressure not being reached.	Check performance to manufacturers specifications.
	Deicer puncture.	Repair per specification or replace.
Deicers deflate slowly.	Pressure regulator set too slow.	Readjust pressure regulator.
	Lines partially blocked.	Inspect and blow out lines.
	Overboard line from control valve partially blocked.	Inspect and blow out lines.

14-90. ICE DETECTION LIGHT.

14-91. INTRODUCTION. This light is used in conjunction with the pneumatic deicing system and will aid the pilot to detect any ice formation on the left wing leading edge during night flying operations.

14-92. DESCRIPTION AND OPERATION. The light is mounted in the left outboard edge of the left nacelle just above leading edge of the wing. It is a sealed beamed, 24-volt unit, which is controlled from a rocker type switch mounted in the overhead switch panel. The light is positioned in the nacelle to illuminate the leading edge of the wing when the switch is activated in the cockpit.

14-93. SERVICING. The only service required of this unit is the replacement of a burned out lamp with a new lamp. Refer to Parts Catalog, for replacement lamp part number.

14-94. REMOVAL.

a. Be sure the switch is in the off position.

b. Remove the nacelle side access panel that the lamp assembly is mounted to and disconnect the wire connections on the back of the lamp.

c. Remove the four clips holding the lamp to the panel and remove the lamp.

14-95. INSTALLATION.

a. Position the gasket and lamp on the panel.

b. Install the four clips and secure with screws and nuts.

c. Connect the electrical leads to the back of the lamp assembly.

d. Position the entire panel on the nacelle side and secure with screws.

e. Activate the switch in the cockpit to check the lamp operation.

14-96. HEATED WINDSHIELD. For servicing of pilot and/or co-pilot heated windshield refer to Section IV.

14-97. WINDSHIELD WIPERS. The windshield wiper on the right windshield is operated off the same motor as the standard wiper. A flexible shaft is routed from the left converter to the converter on the right which operates the right wiper. (Refer to Section IV.)

THIS SPACE INTENTIONALLY LEFT BLANK

14-98. PROPELLER SYNCHRONIZER.

14-99. DESCRIPTION OF PROPELLER SYNCHRONIZER SYSTEM. (Refer to Figure 14-39.) The system consists of two special overspeed governors with magnetic pickups, a control box to monitor the system, an actuator and trimmer assembly to regulate the slave propeller governor, and a control switch and circuit protector with related wire harnesses.

The function of the propeller synchronizer system is to automatically match the propeller RPM of both engines. This is accomplished by using the right engine propeller governor as the master unit and the left propeller governor as the slave unit. Both overspeed governors have magnetic pickups which feed electrical pulses into a control box mounted on the elevator control mounting bracket below the right side of the instrument panel. This control box detects any difference in the electrical pulses into a control box mounted on the elevator control mounting bracket below the right side of the instrument panel. This control box detects any difference in the electrical pulses and in turn activates a stepping type actuator motor mounted on the left engine, which trims the left engine propeller governor through a flexible shaft from the actuator motor to the trimmer assembly on the left engine propeller governor control, thus maintaining the same propeller RPM as the master right propeller governor, within a limited range. The limiting range of operation is built into the system to prevent the slave propeller governor from loosing more than a fixed amount of propeller RPM in case the master engine and propeller is feathered with the system in operation.

NOTE

Manually set the RPM as close as possible before activating the system. When the propellers are synchronized manually, there is a ± 50 RPM maximum effective synchronizing range when the system is activated.

14-100. FUNCTIONAL TEST. This test should be done in flight. First synchronize the propellers manually, and then switch the synchronizer ON. Now slowly adjust the master engine propeller governor control lever, in small increments to increase and decrease the RPM. The RPM range over which the slave engine will remain synchronized with the master engine is the limited range. With the system ON, move the master engine propeller governor control lever to a point which is close to the end of this limited travel. Now turn the system OFF. An unsynchronized condition will develop as the actuator moves the trimmer to its mid-position. When the system is turned ON again, synchronization will resume. If the units do not synchronize, the actuator has reached the end of its travel and must be recentered in the following manner:

a. Turn the system switch OFF.
b. Manually synchronize the engines.
c. Turn the system switch ON.

If the system does not operate properly, perform the ground checks in accordance with Paragraph 14-101.

14-101. TROUBLESHOOTING WITH MINIMUM FIELD EQUIPMENT. The following information will help locate system malfunction in the field with the minimum amount of equipment. The usual mechanics tools and an ohmmeter and voltmeter are all that is needed.

14-102. GROUND CHECK. (Refer to Figure 14-39.)

a. Ascertain that the master switch is ON and the circuit protector is not tripped. Also, determine that the Jones plug receptacle is properly mated with the plug in the airplane's wiring harness. The two halves of the Jones plug should be safety wired together if it does not have retaining clips.

b. Separate the Jones plugs (9) and complete the tests listed in Table XIV-XII, Synchronizer Wiring Test. Complete each step regardless of how recently the installation was made.

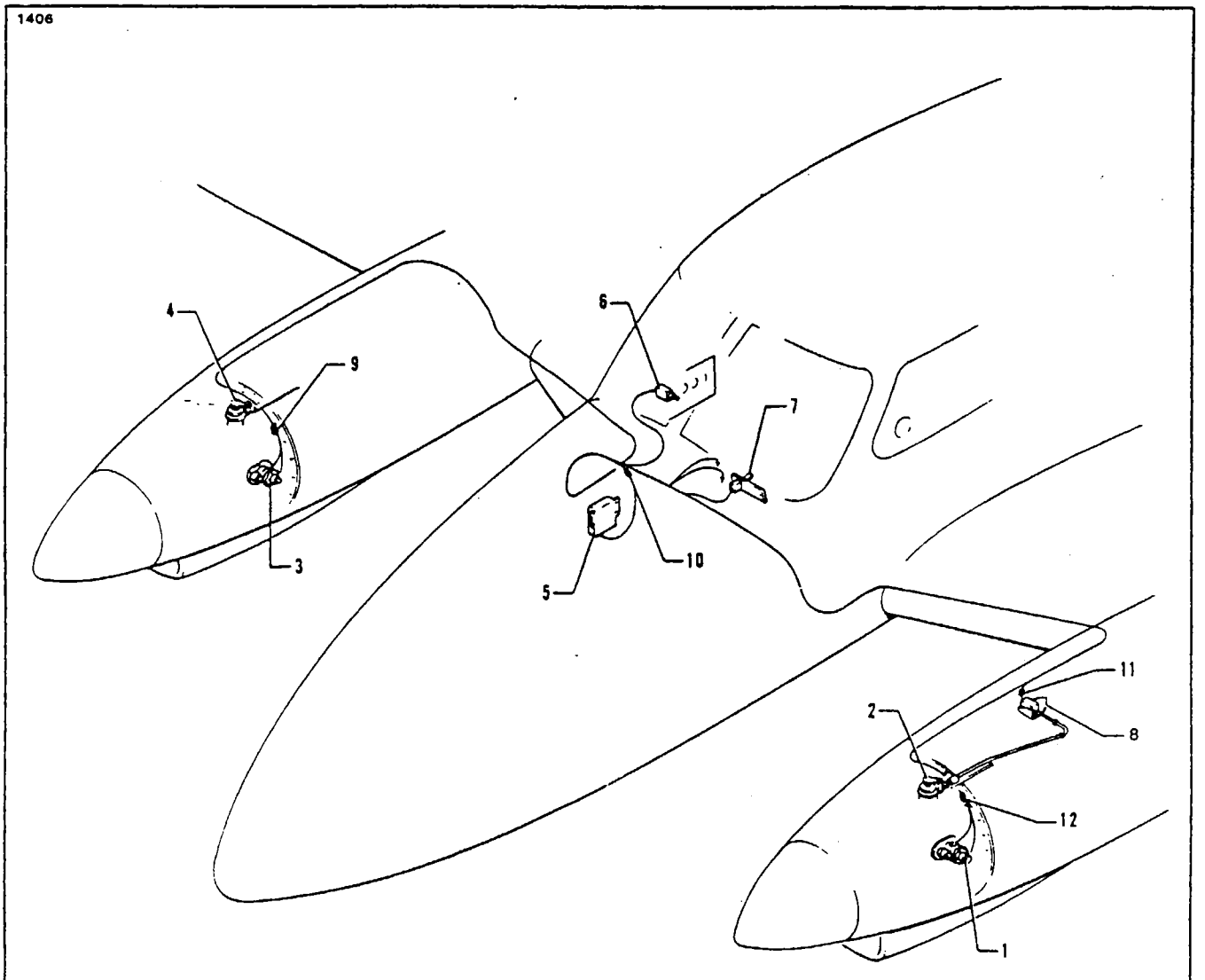

1. OVERSPEED GOVERNOR, LEFT
2. PROPELLER CONSTANT SPEED GOVERNOR, LEFT
3. OVERSPEED GOVERNOR, RIGHT
4. PROPELLER CONSTANT SPEED GOVERNOR, RIGHT
5. CONTROL BOX ASSEMBLY
6. CIRCUIT BREAKER
7. SWITCH ASSEMBLY
8. ACTUATOR ASSEMBLY
9. CONNECTOR E222
10. CONNECTOR E334
11. CONNECTOR E125
12. CONNECTOR E124

Figure 14-39. Propeller Synchronizer Installation

TABLE XIV-XII. SYNCHRONIZER WIRING TEST
DEFECTIVE ACTUATOR TEST

STEP NO.	TEST BETWEEN RECEPTACLE NUMBERS	With Actuator Centered	OBTAIN With Actuator Uncentered 180°		ACTION (If Out of Limits)
			Turn Clockwise (Facing Drive End) To Uncenter (Decrease)	Counterclockwise (Facing Drive End) To Uncenter (Increase)	
1	5 & 1	open circuit (high resistance)	6.5 to 8.5 ohms	6.5 to 8.5 ohms	Bench Check the Actuator
2	5 & 3	open circuit (high resistance)	closed circuit (0 to 1.0 ohms)	13 to 17 ohms	
3	5 & 4	open circuit (high resistance)	13 to 17 ohms	closed circuit (0 to 1.0 ohms	
4	4 & 1	6.5 to 8.5 ohms	6.5 to 8.5 ohms	6.5 to 8.5 ohms	
5	4 & 3	13 to 17 ohms	13 to 17 ohms	13 to 17 ohms	
6	3 & 1	6.5 to 8.5 ohms	6.5 to 8.5 ohms	6.5 to 8.5 ohms	

DEFECTIVE PICKUP TEST

STEP NO.	TEST BETWEEN RECEPTACLE NUMBERS:	OBTAIN	ACTION (if out of limits)
7	8 & 7 (with 6 disconnected at pickup)	90-110 ohm	Repair wiring if at fault. Replace governor if pickup is at fault; replace pickup (Approved Governor Shop)
8	8 & 6 (with 7 disconnected at pickup)	90-110 ohm	
9	8 & aircraft ground	open circuit (very high resistance)	

AIRCRAFT WIRING TEST

STEP NO.	TEST BETWEEN RECEPTACLE NUMBERS:	OBTAIN	ACTION (if out of limits)
10	1 & aircraft ground	short circuit zero ohms	Trace wiring to determine poor ground
11	2 & aircraft ground	open circuit (very high resistance) 500 ohms	Trace wiring to remove fault

TABLE XIV-XII. SYNCHRONIZER WIRING TEST(cont.)

CONTROL BOX TEST

STEP NO.	TEST BETWEEN RECEPTACLE NUMBERS	METER READING	ACTION (If out of Limits)
12	2&1	Same as supply voltage. Polarity of pin No. 2 must be positive and pin No. 1 must be negative.	Trace wiring to determine fault or reversed polarity.

NOTE

Before starting this test, be sure the control box is unplugged, the master switch is off, and the synchronizer circuit protector is pulled.

CAUTION

Do not plug in control box until this test has been satisfactorily completed. Even with the switch OFF, the box could be seriously damaged.

NOTE

Make the test, using an ohmmeter to a fabricated Jones pigtail connected to the Jones plug socket. Zero the ohmmeter and read on the X1 or X10 scale.

CAUTION

Do not probe the Jones plugs. Use a fabricated pigtail. Failure to do so will result in loose pin connections and faulty synchronizer operation.

c. Visually observe the overspeed governor mounted speed pickups for oil leaks or evidence of loosening. This could indicate a change in the pickup clearance.

d. Remove the flexible shaft at the actuator in the left engine nacelle. Insert a screwdriver in the actuator and rotate it through its range. It should rotate freely except for the ratcheting effect of the detent wheel. Normal output torque is 1.5 inch-pounds. Leave the actuator in the center of its range.

e. Adjust the governor trimmer by rotating the flexible shaft to check the amount of torque required. An excellent torque level is one that allows you to adjust the trimmer by turning the squared end of the flexible cable with your fingers. It is more difficult to turn the shaft in the decrease RPM direction. In no case should you need a turning fixture of over .025 inch in diameter on the end of the cable to rotate the trimmer freely throughout its full range. Recenter the trimmer and secure it to the actuator. This check has verified an acceptable friction level of the rotating parts.

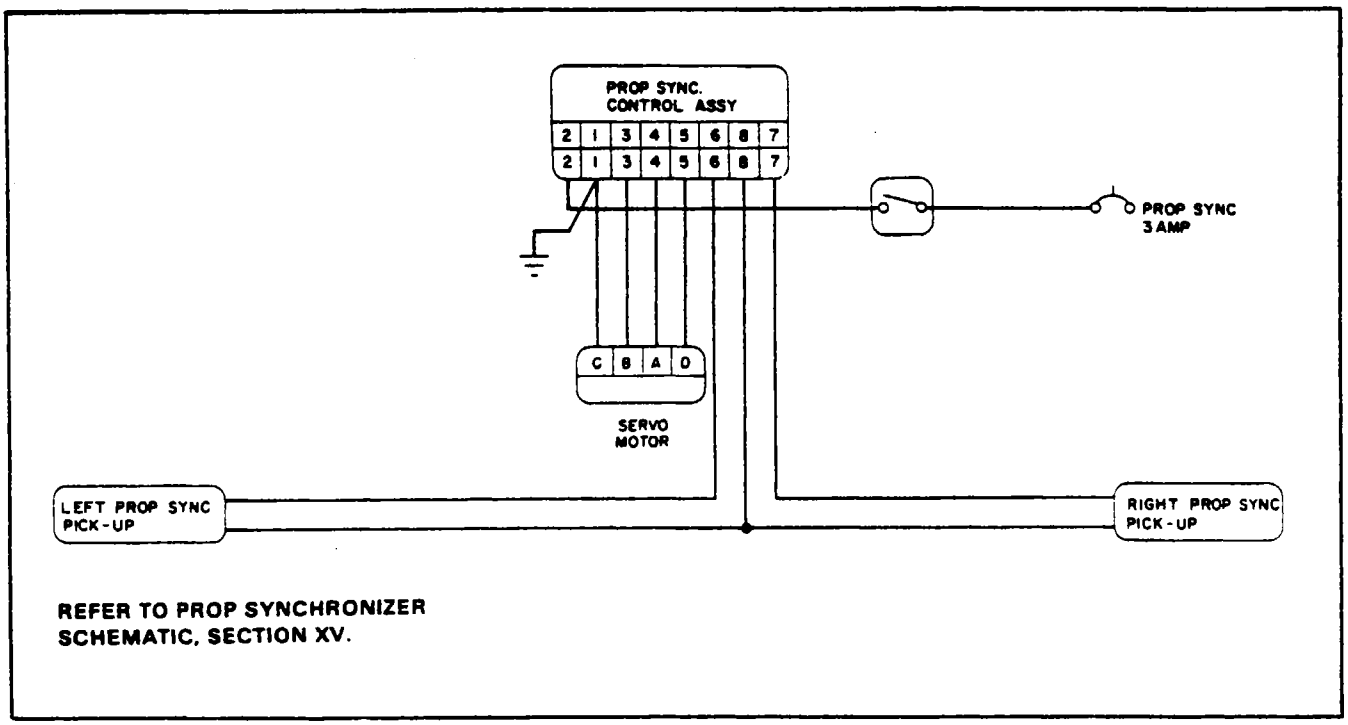

Figure 14-40. Propeller Synchronizer Schematic

f. Connect a pigtail to the separated Jones plug, and run the engines near cruise RPM, test Pins 6 and 8 for the slave engine pickup voltage. Test Pins 7 and 8 for the master engine pickup voltage. These valves should be between 1/2-volt minimum and 3-volt maximum. These are RMS voltages as read on a 5000 ohm/volt AC voltmeter. If all the preceding tests are satisfactory, the airplane can be flown.

14-103. FLIGHT CHECKS. Perform the functional in flight test in accordance with Paragraph 14-102. If the system will not pass this test, try the following steps:

a. With the synchronizer ON, see if the synchronizer action is affected by RPM and/or power setting, particularly at lower cruise RPM and power settings. This would indicate a possibly unacceptably rough governor drive. If operation at lower RPM results in improved synchronization, the drives to the governors should be investigated.

b. Reduce the electrical load. Turn off all electrical equipment including the alternators. Leave the master and synchronizer switches ON. If the synchronizing improves, there is a possibility that abnormal voltage spikes on the bus from some other electrical accessory have been upsetting the synchronizer. Isolate the offending electrical accessory and repair it. If the trouble has been traced to the control box, exchange it for another unit.

NOTE

If troubles still persist with the system, it should be checked by an approved governor overhaul station or the Woodward Governor Company.

14-104. MAINTENANCE. Little maintenance is required on this system apart from visual inspection at the time of regular airplane inspections. Ascertain that the electrical connections, flexible shaft, and related components are securely attached. Every 100 hours inspect the rod end assembly, paying particular attention to the bearing.

Engine oil should be kept clean. Dirty engine oil will deposit sludge and varnish on the internal governor parts and cause sluggish operation. This would require disassembly and cleaning of the governors by an approved overhaul facility.

CAUTION

The control box and actuator have the capability of damaging each other as follows: If the control box turns on steady, it will burn out one or both actuator motor windings. If the actuator leads are shorted to ground, the power transistors in the control box will be permanently damaged. Therefore, when replacing a damaged component, complete the electrical test in Table XIV-XII to insure the other component is undamaged.

14-105. REMOVAL OF TRIMMER ASSEMBLY. (Refer to Figure 14-42.)

a. Remove the left engine cowling.

b. Cut the safety wire between the trimmer assembly and the nut securing the flexible shaft to the trimmer.

c. Remove the flexible shaft from the trimmer.

d. Loosen the locknut on the propeller control rod.

e. Remove the locknut, bushing, and bolt securing the trimmer rod end to the governor control lever and remove the trimmer assembly.

14-106. INSTALLATION OF TRIMMER ASSEMBLY.

a. Position the trimmer onto the propeller control rod.

b. Align the trimmer assembly rod end with the governor control lever and secure the control rod locknut.

c. Ascertain that the trimmer assembly is at its neutral position by rotating the splined shaft in the trimming assembly by hand and counting the total number of turns available from stop to stop; then return to the center position.

d. Install the bolt, bushing, and locknut securing the trimmer rod end and the governor control lever.

e. Rig the governor control in accordance with rigging procedures given in Section VIII.

f. Again manually rotate the trimmer to one end of its travel. Now move the cockpit propeller control through its complete range and observe the governor speed adjustment lever to be certain it hits both maximum and minimum RPM stops. Repeat this procedure with the trimmer rotated to the opposite end of its travel. This will assure that the standard governor rigging allows stop-to-stop travel with any possible trimmer setting. Reposition the trimmer to its center position.

g. Before connecting the flexible shaft to the trimmer assembly, ascertain that the actuator motor is at its center position. (Refer to Paragraph 14-109.)

h. With the trimmer assembly and actuator motor at these centered positions, connect the flexible shaft to the trimmer and secure with nut and safety wire as shown in Figure 14-42.

i. Replace the engine cowling.

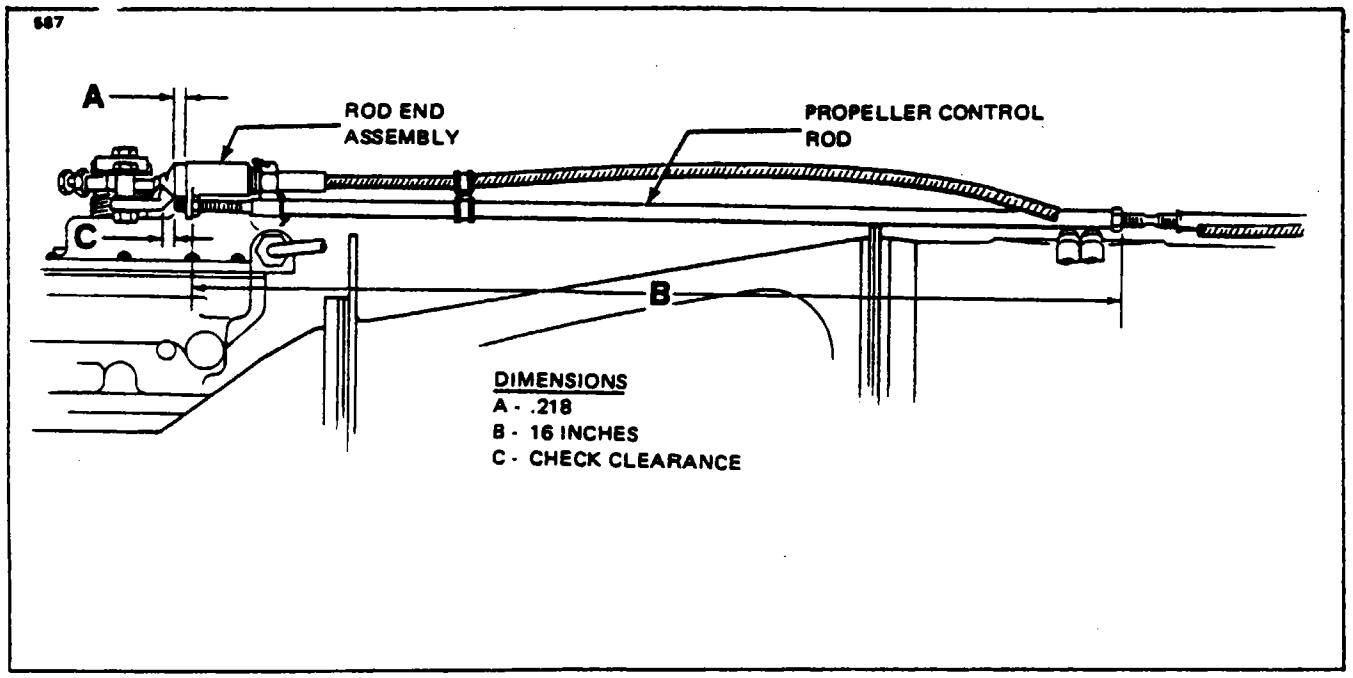

Figure 14-41. Propeller Synchronizer Rigging (Left Engine Only)

14-107. SYNCHRONIZER RIGGING. (Refer to Figure 14-41.)

a. Adjust the propeller lever stop in the pedestal as far forward as possible (large washer type stop).

b. Screw the micro-switch contact screws into the propeller control levers (left and right), this will get the screws out of the way while performing the balance of this rigging procedure.

c. Disconnect the synchronizer flex shaft from the motor and drive the shaft to extend the trimmer from the rod end assembly .218 of an inch. (Refer to Figure 14-41, Dimension A.)

d. Adjust the propeller control rod to obtain 16 inches between the stop nuts at each end of the rod. (Refer to Figure 14-41, Dimension B.) This is an initial setting only.

e. Move the left propeller control lever at the pedestal to its full forward position. The stop on the governor must be contacted, if not, lengthen the propeller control rod.

f. Move the left propeller control lever to its aft stop (push hard as this is in a friction range). The stop on the governor must be contacted.

g. Drive the synchronizer flex shaft to extend the trimmer .437 of an inch. (Refer to Figure 14-41, Dimension A.)

h. Move the propeller control lever as in Steps "e" and "f" and check for contacts with the governor stops. Make any adjustments if necessary.

i. Drive the synchronizer flex shaft to return the trimmer to the .218 of an inch dimension.

j. Rig the right engine to match control alignment.

k. Check the clearance between the trimmer and rod end assembly as shown in Figure 14-41, Dimension C.

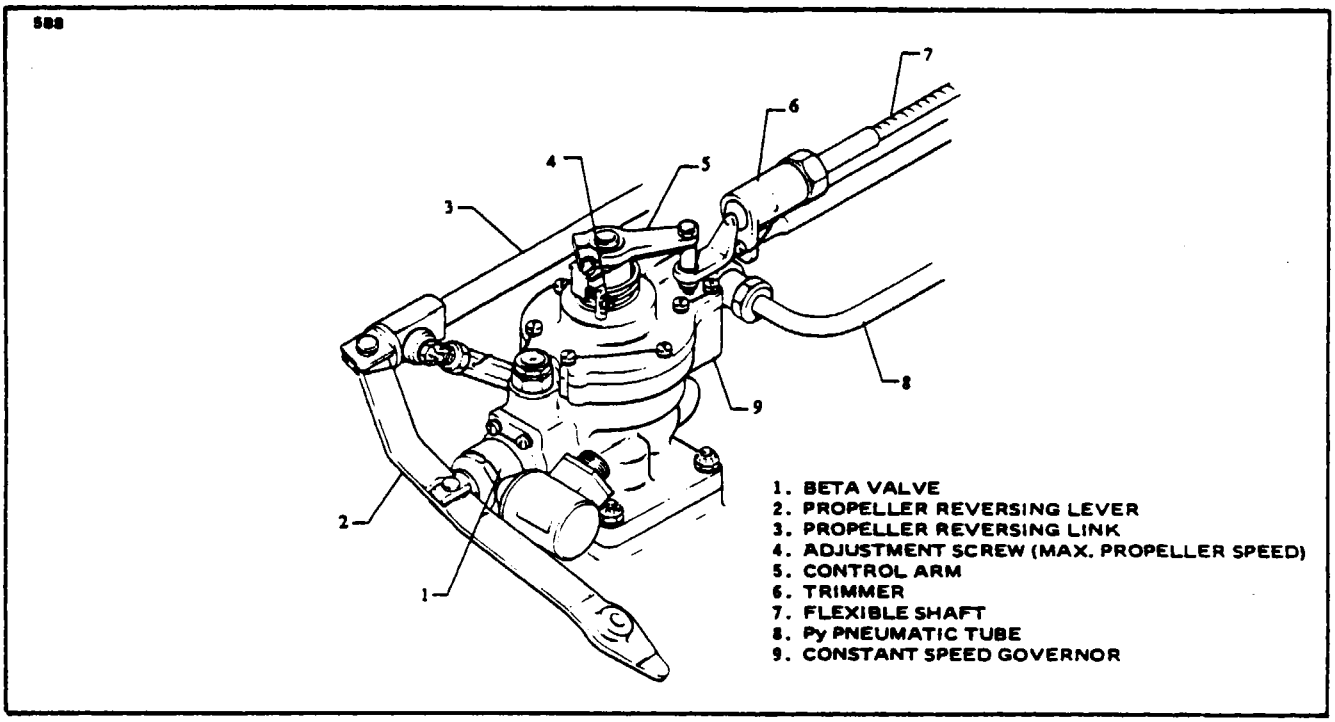

Figure 14-42. Trimmer Assembly

14-108. REMOVAL OF ACTUATOR.

a. Remove the left engine cowling.
b. Disconnect the electrical plug from the actuator and also the flexible shaft.
c. Remove the four locknuts and screws holding the actuator in place.

14-109. INSTALLATION OF ACTUATOR.

a. Before installing the actuator, ascertain that the motor is at the center of its range by inserting a screwdriver in the actuator drive and turning it by hand and counting the total number of turns from stop to stop; then return the actuator drive to the center position.
b. Install the actuator to the mounting bracket and secure in place with four screws and locknuts.
c. Connect the flexible shaft to the actuator and secure with nut and safety wire.
d. Connect the electrical plug and replace the engine cowling.

14-110. SERVICE OF ACTUATOR. At the time of governor overhaul, remove the cover from the actuator and clean the internal parts, such as micro-switches and electrical connections, etc. Apply Alpha-Molykote "G" to the spiral groove of the switch actuating disc at the end of the motor.

14-111. REMOVAL OF CONTROL BOX.

a. Disconnect the Jones plug, the wire going to the bus and the harness going to the switch.
b. Remove the four machine screws and locknut and remove the control box.

NOTE

The control box is a transistorized unit which cannot be serviced in the field. Special Woodward Test Unit No. 213600 can be used to explore the control box and locate any malfunctioning.

NOTE

If an actuator is replaced because of shorted or open windings, the control box must also be replaced, unless it is determined that the box is undamaged.

14-112. INSTALLATION OF CONTROL BOX.

a. Install the control box to the mounting bracket and secure with four screws and locknuts.
b. Connect the wires going to the switch and airplane bus.
c. Connect the Jones plug and secure with safety wire, if it does not have retaining clips.

14-113. TEST EQUIPMENT. Various test equipment can be purchased from the Woodward Governor Company of Rockford, Illinois to help accomplish a complete check of the synchronizer system, along with their latest revision of Service Bulletin 33049D. It is suggested that test instrument, P/N 213600, be purchased from Woodward to allow complete testing of the synchronizer system. A small test instrument, P/N T-46192, can be built in the field from the diagram and parts list in Figure 14-43. This instrument has pulse indicating lights and jacks for checking voltages and ohm values only as given in Table XIV-XII, Synchronizer Wiring Test. Test instrument, P/N 213600, has pulse indicating lights, jacks for checking voltages and ohm values, and an oscilliator system with which magnetic pickup output may be simulated. This allows partially checking the control box without running the engines.

14-114. BENCH TESTING THE ACTUATOR. Use an ohmmeter on the pins of the actuator disconnect. Zero the ohmmeter and read on the X1 scale. Table XIV-XII steps 1 to 6 gives actuator test from the Jones plug through the harness to the actuator. See Propeller Synchronizer Schematic and convert receptacle numbers in Table XIV-XII to actuator leads and perform steps 1 to 6 of Table XIV-XII directly on actuator. Replace any actuator which does not meet the values given in Table XIV-XII after bench testing. Check for continuity of the four actuator leads, with reference to Table XIV-XIII.

If either test unit is plugged into the system during flight or ground testing, the pulsing and direction of pulsing of the actuator will be indicated by the flashing lights of the test unit. Refer to Table XIV-XIV for description of control box malfunction or system defects which can be detected by the lights on the test units, along with the probable cause and suggested remedy.

TABLE XIV-XIII AIRCRAFT WIRING CHECK WITH ACTUATOR REMOVED

Jones Pin 1 to aircraft ground	0 Ohms
Jones Pin 3 to aircraft ground	Open Circuit (Very High Resistance)
Jones Pin 4 to aircraft ground	Open Circuit (Very High Resistance)
Jones Pin 5 to aircraft ground	Open Circuit (Very High Resistance)

TABLE XIV-XIV. TROUBLESHOOTING CHART (ACTUATOR)

Trouble	Cause	Remedy
Double pulsing (both lights flashing simultaneously).	Excessive voltage spikes on bus caused by generator or other electrical accessory.	Repair the offending accessory.
	Malfunctioning control box.	Return to Woodward Governor Company for repair.
	Magnetic pickup voltage incorrect.	Return to Woodward Governor Company for repair.
Either or both lights on continuously.	Malfunctioning control box, actuator, or wiring.	Determine the malfunction with wiring check sheet.
No pulsing activity.	Malfunctioning control box.	Determine the malfunction with the wiring check sheet or 213600 test instrument.
Excessive pulsing in one direction.	Excessive torque required to trim the governor in one direction (this assumes the governor and propeller are equally responsive in each direction).	Check for high friction level or misalignment in the flex shaft or trimmer.

PARTS LIST FOR T-46192 SYNCHRONIZER TEST INSTRUMENT

BOX:	(1)	Hammertone gray aluminum 3-1/4" x 2-1/8" x 1-5/8" Bud Box Co. P/N CU-2101-A
BANANA JACK:	(8)	H.H. Smith Co., type 1509 (black)
LAMP:	(2)	Dialco midget flange type white lens pilot lamp series no. 177-8430, type no. 0975-503 or Drake midget flange type white lens pilot lamp no. 5131-038-304
CABLE:	(6 ft.)	Vinyl covered plastic insulated cable, Belden types 8448 (8 #22 stranded wires)
GROMMET:	(1)	5/8" O.D. x 3/8" I.D. black rubber grommet
PLUG:	(1)	Cinch Jones 8 connector plug P/N P-308 CCT
SOCKET:	(1)	Cinch Jones 8 connector socket P/N S-308 CCT
BULB:	(2)	Miniature Flange - Base Lamp

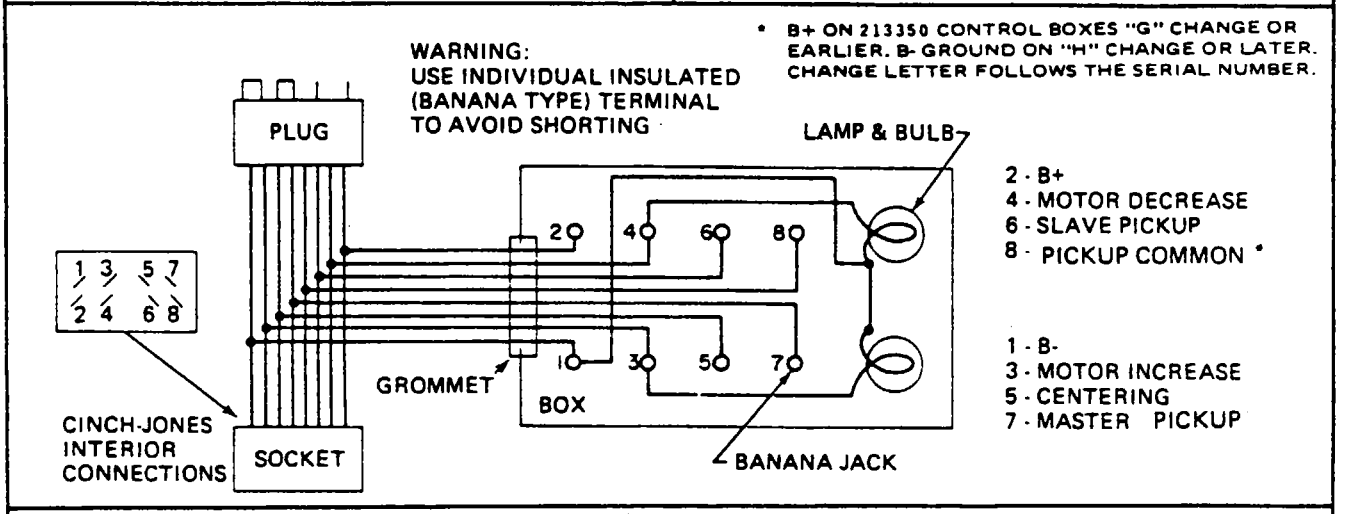

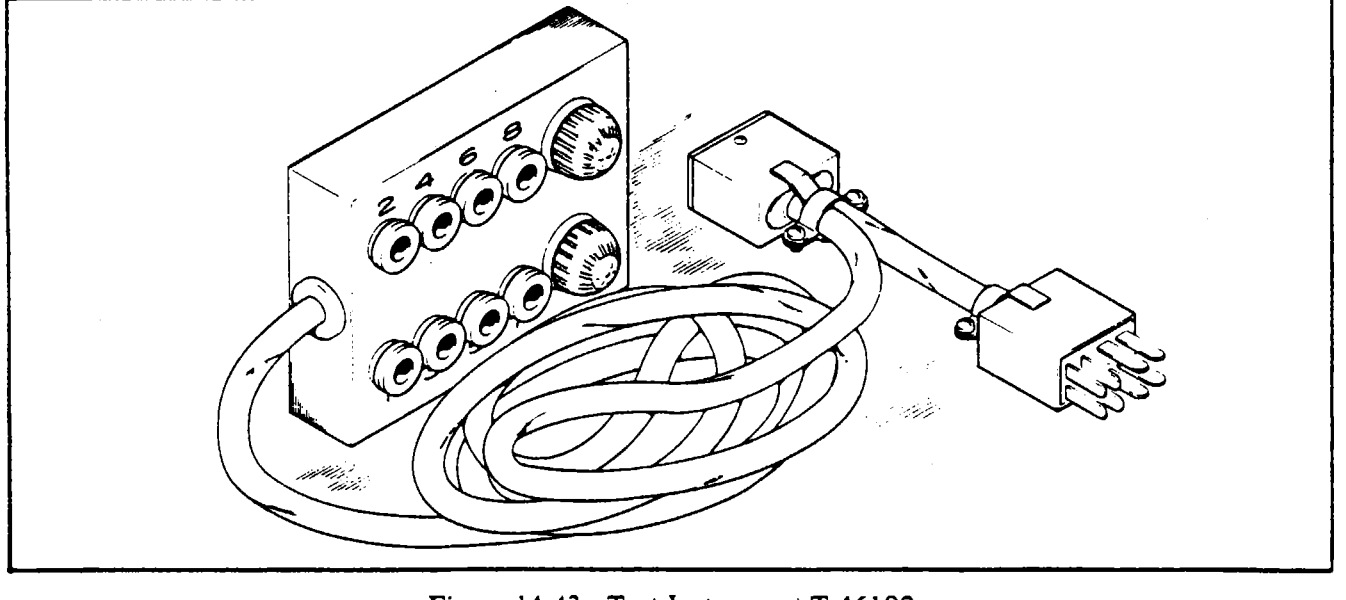

Figure 14-43. Test Instrument T-46192

TABLE XIV-XV. TROUBLESHOOTING CHART (PROPELLER SYNCHRONIZER)

Trouble	Cause	Remedy
Synchronizer hunting.	Binding of the governor control arm, trimmer assembly, and/or rod end.	Correct any mechanical binding or replace Uniball of rod end if binding.
	Master governor speed is varying.	Overhaul governors.
Synchronizer runs out of synchronization when turned on.	Reversed speed pickup leads or Jones plug leads.	Perform Steps 7 and 8 of test for defective pickup.
	Intermittent shorts or opens in the pickup or its wiring.	Monitor pickup voltage produced. Replace defective pickup.
Synchronizer will not center.	Defective pickup.	Replace.
	Defective control box.	Replace.
	Mechanically misrigged.	Rerig.
	Defective centering mechanism.	Replace actuator.
	Rod end, flexible shaft or actuator mechanically bound up.	Reduce friction to an acceptable level.
Lack of range.	Improper rigging.	Rerig properly.
	Trying to synchronize too close to a mechanical stop.	Adjust prop control in cockpit to move speed control lever further away from stop.
	Defective control box.	Replace the control box.
	Mechanical binding of trimmer or actuator.	Adjust trimmer or actuator to operate smoothly from stop to stop.

TABLE XIV-XV. TROUBLESHOOTING CHART (PROPELLER SYNCHRONIZER) (cont.)

Trouble	Cause	Remedy
Synchronizer corrects in one direction only.	One side of actuator motor defective.	Replace actuator.
	One side of control box defective.	Replace control box.
	Mechanical binding in one direction.	Correct binding.
	Improper rigging.	Rerig.
Slow to synchronize and won't hold synchronization.	Defective control box.	Replace control box.
	Excessive voltage spikes from other electrical accessory.	Repair offending electrical accessory.
	Excessive mechanical friction.	Correct mechanical binding.
Synchronizer operates intermittently.	Excessive mechanical friction.	Correct mechanical binding
	Intermittent short in pickup or wiring.	Repair pickup lead or replace pickup.
	Intermittent fault in control box.	Replace control box.
	Intermittent open in actuator or motor leads.	Replace actuator or repair leads.
	Defective electrical plug connector.	Replace plug connector.
	Excessive voltage spikes on bus from other malfunctioning electrical accessory.	Repair offending electrical accessory.

14-115. PROPELLER SYNCHROPHASER. (Woodward Type I)

14-116. DESCRIPTION OF PROPELLER SYNCHROPHASER SYSTEM (Refer to Figure 14-44.) The Woodward Type I Synchrophaser consists of a control box mounted in the cockpit, an actuator mounted in the slave engine governor and actuator, a speed sensing magnetic pickup located near three phase targets for each engine that rotate with each propeller shaft.

The system operates on electronic impulses, generated by the disc targets passing the magnetic pickups, being fed into the control box. This control box detects any difference in the electrical pulses and in turn activates a stepping type actuator motor mounted on the left engine, which trims the left engine propeller governor through a flexible shaft from the actuator motor to the trimmer assembly on the left engine propeller governor control, thus mantaining the same propeller RPM as the master right propeller governor, within a limited range. Normal governor operation is unchanged, but the synchrophaser will continuously monitor engine RPM and propeller phase angle and reset the slave engine governor as required.

The RPM of the slave engine will follow changes in the RPM of the master engine over a predetermined limited range. This limited range feature prevents the slave engine from losing more than a fixed amount of RPM in case the master engine is feathered with the synchrophaser "ON". In this installation, the right engine is the master engine.

14-117. FUNCTIONAL TEST. This test should be done in flight. First synchronize the propellers manually, and then switch the synchrophaser ON. Now slowly adjust the master engine propeller governor control lever, in small increments to increase and decrease the RPM. The RPM range over which the slave engine will remain synchronized with the master engine is the limited range. With the system ON, move the master engine propeller governor control lever to a point which is close to the end of this limited travel. Now turn the system OFF. An unsynchronized condition will develop as the actuator moves the trimmer to its mid-position. When the system is turned ON again, synchrophasing will resume. If the units do not become synchrophased, the actuator has reached the end of its travel and must be recentered in the following manner:

a. Turn the system switch OFF.
b. Manually synchronize the engines.
c. Turn the system switch ON.

If the system does not operate properly, perform the ground checks in accordance with Paragraph 14-118.

14-118. TROUBLESHOOTING WITH MINIMUM FIELD EQUIPMENT. The following information will help locate system malfunction in the field with the minimum amount of equipment. The usual mechanics tools and an ohmmeter and voltmeter are all that is needed.

14-119. GROUND CHECK. (Refer to Figure 14-44.)

a. Ascertain that the master switch is ON and the circuit protector is not tripped. Also, determine that the Jones plug receptacle is properly mated with the plug in the airplane's wiring harness. The two halves of the Jones plug should be safety wired together if it does not have retaining clips.

b. Separate the Jones plugs (10) and complete the tests listed in Table XIV-XVI, Synchrophaser Wiring Test. Complete each step regardless of how recently the installation was made.

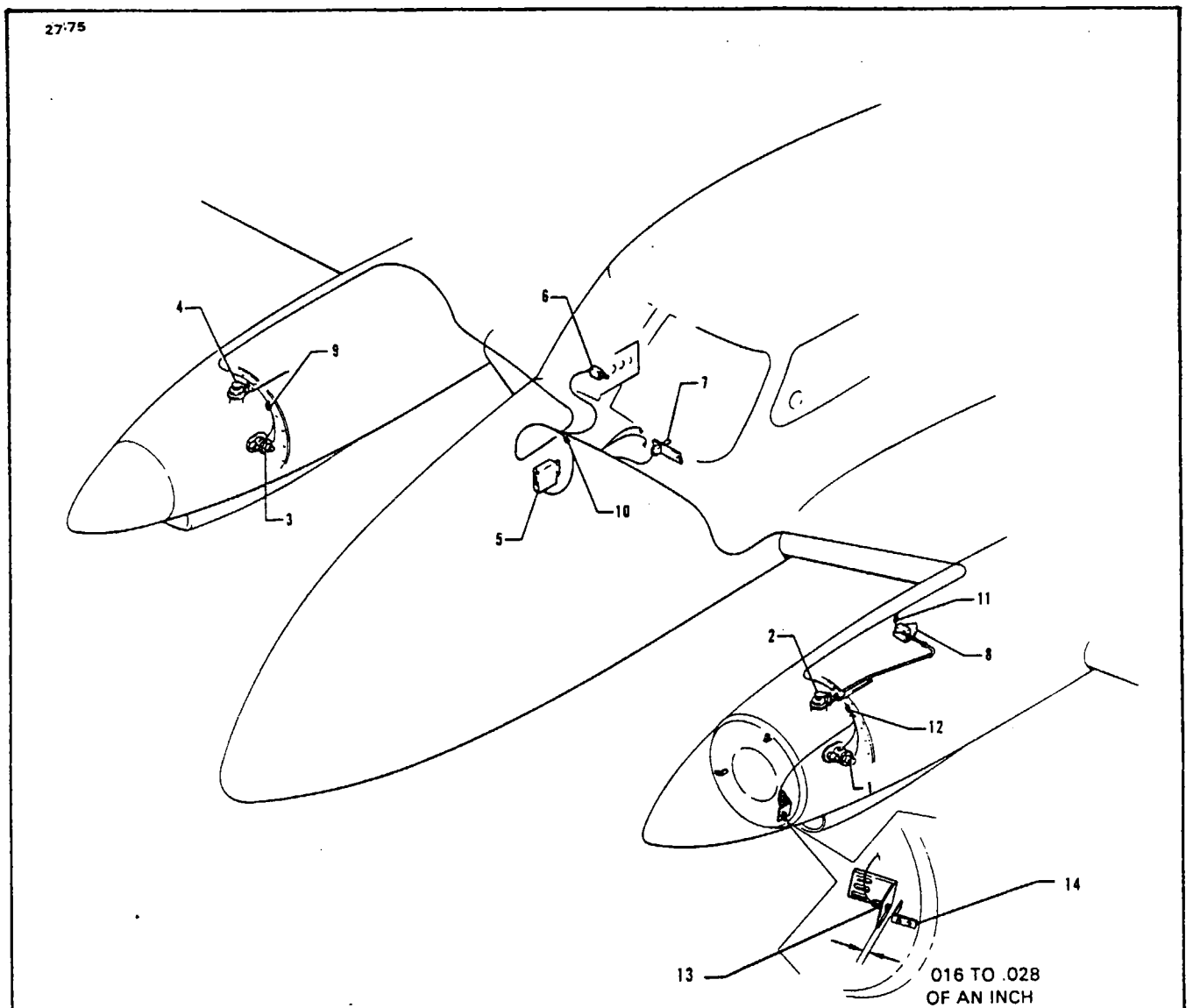

1. OVERSPEED GOVERNOR, LEFT
2. PROPELLER CONSTANT SPEED GOVERNOR, LEFT
3 OVERSPEED GOVERNOR, RIGHT
4. PROPELLER CONSTANT SPEED GOVERNOR, RIGHT
5. CONTROL BOX ASSEMBLY
6. CIRCUIT BREAKER
7. SWITCH ASSEMBLY
8. ACTUATOR ASSEMBLY
9. CONNECTOR
10. CONNECTOR
11. CONNECTOR
12. CONNECTOR
13. MAGNETIC PHASE PICKUP
14 TARGET (3)

Figure 14-44. Propeller Synchrophaser Installation (Woodward Type I)

TABLE XIV-XVI. SYNCHROPHASER WIRING TEST
(WOODWARD TYPE I)
STEP NO'S. 1-6 Test for Defective Actuator

STEP NO.	TEST BETWEEN RECEPTACLE NUMBERS	With Actuator Centered	OBTAIN With Actuator Uncentered 180°		ACTION (If Out of Limits)
			Turn Clockwise (Facing Drive End) To Uncenter	Counterclockwise (Facing Drive End) To Uncenter	
1	5 & 1	open circuit (high resistance)	6.5 to 8.5 ohms	6.5 to 8.5 ohms	Bench Check the Actuator per Table XIV-XVI
2	5 & 3	open circuit (high resistance)	closed circuit (0 to 1.0 ohms)	13 to 17 ohms	
3	5 & 4	open circuit (high resistance)	13 to 17 ohms	closed circuit (0 to 1.0 ohms)	
4	4 & 1	6.5 to 8.5 ohms	6.5 to 8.5 ohms	6.5 to 8.5 ohms	
5	4 & 3	13 to 17 ohms	13 to 17 ohms	13 to 17 ohms	
6	3 & 1	6.5 to 8.5 ohms	6.5 to 8.5 ohms	6.5 to 8.5 ohms	

STEP NO'S. 7-11 Test for Defective Pickup
STEP NO'S. 12-13 Test Aircraft Wiring

STEP NO.	TEST BETWEEN TERMINAL NUMBERS	10 PIN SYSTEM		ACTION (If Out of Limits)
		Other Than O.S. Gov.	Pickup In O.S. Gov.	
7	8 & 7	52 - 68	90 - 110	Repair wiring or replace pickup if it is defective.
8	8 & 9	52 - 68		
9	8 & 6	52 - 68	90 - 110	
10	8 & 10	52 - 68		
11	8 & Aircraft Ground	open circuit (very high resistance)		
12	2 & Aircraft Ground*	open circuit (very high resistance)		Trace wiring to remove poor ground.
13	1 & Aircraft Ground	short circuit zero ohms		Trace wiring to remove fault.

*2 and aircraft ground will read some low resistance value if you cannot open the circuit breaker or if there are any indicating lights in the circuit.

TABLE XIV-XVI SYNCHROPHASER WIRING TEST
(WOODWARD TYPE I) (cont.)
VOLTAGE CHECK

STEP NO.	TEST BETWEEN RECEPTACLE NUMBERS	METER READING	ACTION (If Out of Limits)
14	2 & 1	Same as supply voltage. Polarity of Pin No. 2 must be positive and Pin No. 1 must be negative.	Trace wiring to determine fault or reversed polarity.

NOTE

Before starting this test, be sure the control box is unplugged, the master switch is off, and the synchrophaser circuit protector is pulled.

CAUTION

Do not plug in control box until this test has been satisfactorily completed. Even with the switch OFF, the box could be seriously damaged.

NOTE

Make the test, using an ohmmeter to a fabricated Jones pigtail connected to the Jones plug socket. Zero the ohmmeter and read on the X1 or X10 scale.

NOTE

If another accessory uses the same circuit protector, turn this accessory off before starting tests. The control box must be unplugged for these tests also.

CAUTION

Do not probe the Jones plugs with anything thicker than .045 of an inch in diameter. Insert and remove probe carefully. Failure to do so will result in loose pin connections and faulty synchrophaser operation.

c. Visually observe the overspeed governor mounted speed pickups for oil leaks or evidence of loosening. This could indicate a change in the pickup clearance.

d. Remove the flexible shaft at the actuator in the left engine nacelle. Insert a screwdriver in the actuator and rotate it through its range. It should rotate freely except for the ratcheting effect of the detent wheel. Normal output torque is 1.5 inch-pounds. Leave the actuator in the center of its range.

e. Adjust the governor trimmer by rotating the flexible shaft to check the amount of torque required.. An excellent torque level is one that allows you to adjust the trimmer by turning the squared end of the flexible cable with your fingers. It is more difficult to turn the shaft in the decrease RPM direction. In no case should you need a turning fixture of over .025 inch in diameter on the end of the cable to rotate the trimmer freely throughout its full range. Recenter the trimmer and secure it to the actuator. This check has verified an acceptable friction level of the rotating parts.

f. Connect a pigtail to the separated Jones plug, and run the engines near cruise RPM; test Pins 6 and 8 for the slave engine synchronizer pickup voltage. Test Pins 7 and 8 for the master engine synchronizer pickup voltage. These values should be between .85-volt minimum and 4-volt maximum for the synchronizer pickup. These are RMS voltages as read on a 5000 ohm/volt AC voltmeter.

g. Test Pins 9 and 8 for slave engine synchrophaser pickup voltage. Test Pins 10 and 8 for master engine synchrophaser pickup voltage. These values should be 3 ± 0.3 volts AC.

h. If all preceding tests are satisfactory, the aircraft can be flown.

14-120. FLIGHT CHECKS. Perform the functional test in accordance with Paragraph 14-117. If the system will not pass this test, try the following steps:

a. With the synchrophaser ON, see if the synchrophaser action is affected by RPM and/or power setting, particularly at lower cruise RPM and power settings. This would indicate a possibly unacceptably rough governor drive. If operation at lower RPM results in improved synchrophasing, the drives to the governors should be investigated.

THIS SPACE INTENTIONALLY LEFT BLANK

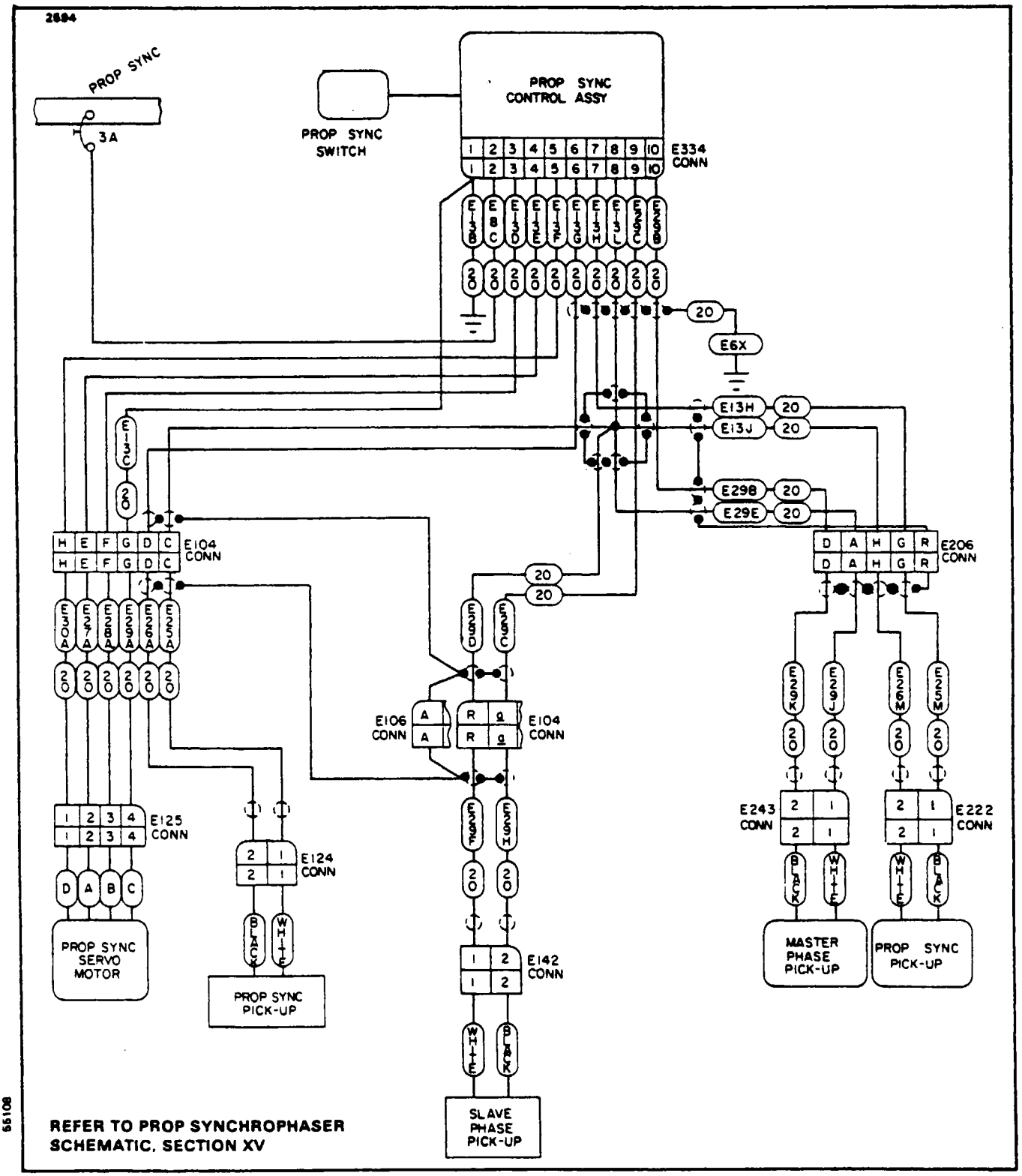

Figure 14-45. Propeller Synchrophaser Diagram
(Woodward Type I)

b. Reduce the electrical load. Turn off all electrical equipment including the alternators. Leave the master and synchrophaser switches ON. If the synchrophasing improves, there is a possibility that abnormal voltage spikes on the bus from some other electrical accessory have been upsetting the synchrophaser. Isolate the offending electrical accessory and repair it. If the trouble has been traced to the control box, exchange it for another unit.

NOTE

If troubles still persist with the system, it should be checked by an approved governor overhaul station or the Woodward Governor Company.

14-121. MAINTENANCE. Little maintenance is required on this system apart from visual inspection at the time of regular airplane inspections. Ascertain that the electrical connections, flexible shaft, and related components are securely attached. Every 100 hours inspect the rod end assembly, paying particular attention to the bearing.

NOTE

Rod end trimmers are lubricated with a baked-on dry Molykote. DO NOT OIL.

Engine oil should be kept clean. Dirty engine oil will deposit sludge and varnish on the internal governor parts and cause sluggish operation. This would require disassembly and cleaning of the governors by an approved overhaul facility.

CAUTION

The control box and actuator have the capability of damaging each other as follows: If the control box turns on steady, it will burn out one or both actuator motor windings. If the actuator leads are shorted to ground, the power transistors in the control box will be permanently damaged. Therefore, when replacing a damaged component, complete the electrical test in Table XIV-XVI to insure the other component is undamaged.

14-122. REMOVAL OF TRIMMER ASSEMBLY. (Refer to Figure 14-46.)

a. Remove the left engine cowling.

b. Cut the safety wire between the trimmer assembly and the nut securing the flexible shaft to the trimmer.

c. Remove the flexible shaft from the trimmer.

d. Loosen the locknut on the propeller control rod.

e. Remove the locknut, bushing, and bolt securing the trimmer rod end to the governor control lever and remove the trimmer assembly.

14-123. INSTALLATION OF TRIMMER ASSEMBLY.

a. Position the trimmer onto the propeller control rod.

b. Align the trimmer assembly rod end with the governor control lever and secure the control rod locknut.

c. Ascertain that the trimmer assembly is at its neutral position by rotating the splined shaft in the trimming assembly by hand and counting the total number of turns available from stop to stop; then return to the center position.

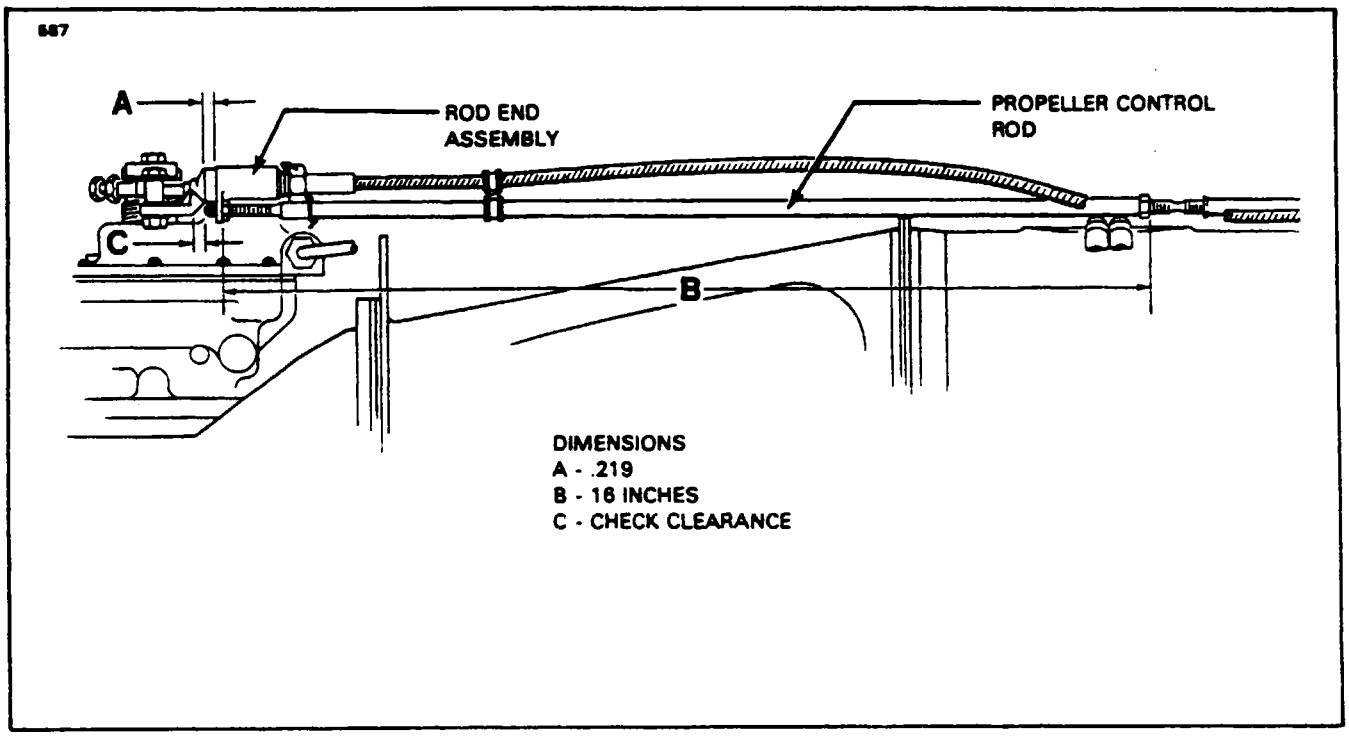

Figure 14-46. Propeller Synchrophaser Rigging (Left Engine Only)

d. Install the bolt, bushing, and locknut securing the trimmer rod end and the governor control lever.

e. Rig the governor control in accordance with rigging procedures given in Section VIII or Section VIIIA.

f. Again manually rotate the trimmer to one end of its travel. Now move the cockpit propeller control through its complete range and observe the governor speed adjustment lever to be certain it hits both maximum and minimum RPM stops. Repeat this procedure with the trimmer rotated to the opposite end of its travel. This will assure that the standard governor rigging allows stop-to-stop travel with any possible trimmer setting. Reposition the trimmer to its center position.

g. Before connecting the flexible shaft to the trimmer assembly, ascertain that the actuator motor is at its center position. (Refer to Paragraph 14-126.)

h. With the trimmer assembly and actuator motor at these centered positions, connect the flexible shaft to the trimmer and secure with nut and safety wire as shown in Figure 14-46.

i. Replace the engine cowling.

14-124. SYNCHROPHASER RIGGING. (Refer to Figure 14-46.)

a. Adjust the propeller lever stop in the pedestal as far forward as possible (large washer type stop).

b. Screw the micro-switch contact screws into the propeller control levers (left and right), this will get the screws out of the way while performing the balance of this rigging procedure.

c. Disconnect the synchronizer flex shaft from the motor and drive the shaft to extend the trimmer from the rod end assembly .219 of an inch. (Refer to Figure 14-46, Dimension A.)

d. Adjust the propeller control rod to obtain 16 inches between the stop nuts at each end of the rod. (Refer to Figure 14-46, Dimension B.) This is an initial setting only.

e. Move the left propeller control lever at the pedestal to its full forward position. The stop on the governor must be contacted, if not, lengthen the propeller control rod.

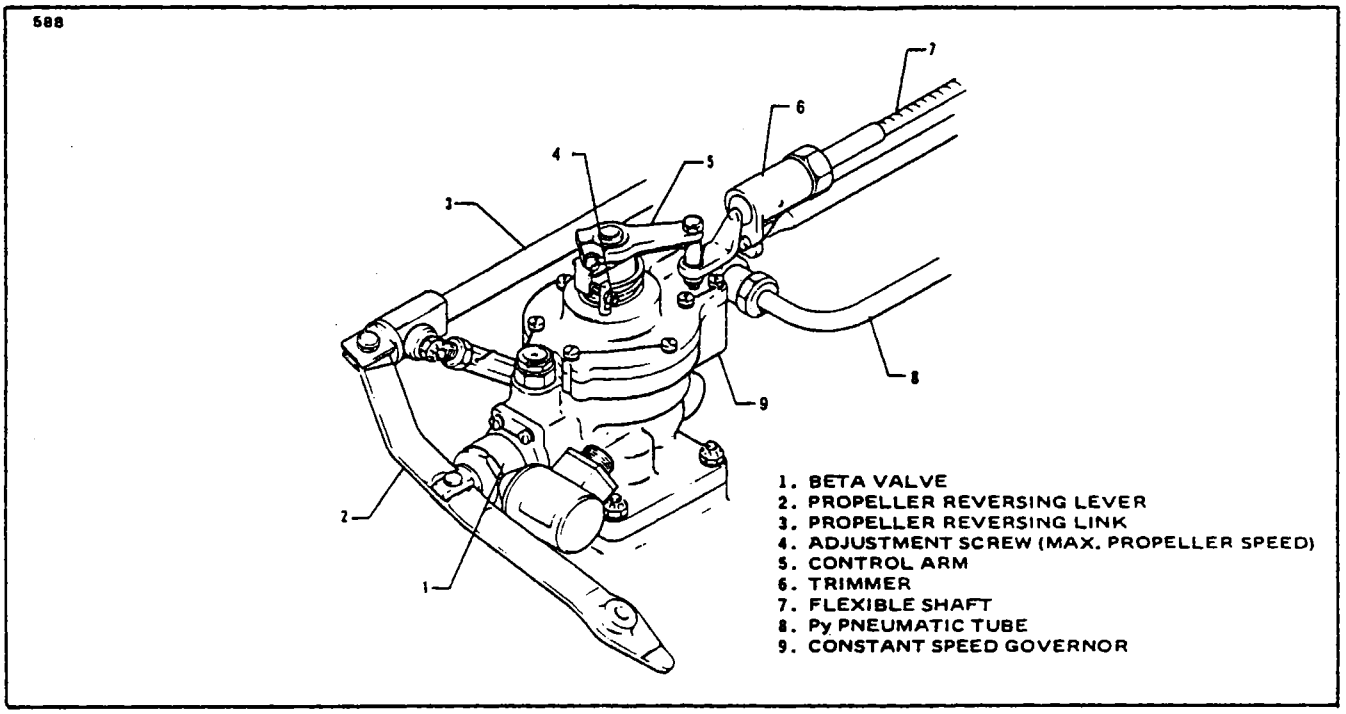

Figure 14-47. Trimmer Assembly

f. Move the left propeller control lever to its aft stop (push hard as this is in a friction range). The stop on the governor must be contacted.

g. Drive the synchronizer flex shaft to extend the trimmer .219 of an inch. (Refer to Figure 14-46, Dimension A.)

h. Move the propeller control lever as in Steps "e" and "f" and check for contacts with the governor stops. Make any adjustments if necessary.

i. Drive the synchronizer flex shaft to return the trimmer to the .219 of an inch dimension.

j. Rig the right engine to match control alignment.

k. Check the clearance between the trimmer and rod end assembly as shown in Figure 14-46, Dimension C.

l. Safety all joints and adjust pedestal micro-switch.

14-125. REMOVAL OF ACTUATOR.

a. Remove the left engine cowling.

b. Disconnect the electrical plug from the actuator and also the flexible shaft.

c. Remove the four locknuts and screws holding the actuator in place.

14-126. INSTALLATION OF ACTUATOR.

a. Before installing the actuator, ascertain that the motor is at the center of its range by inserting a screwdriver in the actuator drive and turning it by hand and counting the total number of turns from stop to stop; then return the actuator drive to the center position.

b. Install the actuator to the mounting bracket and secure in place with four screws and locknuts.

c. Connect the flexible shaft to the actuator and secure with nut and safety wire.

d. Connect the electrical plug and replace the engine cowling.

14-127. SERVICE OF ACTUATOR. At the time of governor overhaul, remove the cover from the actuator and clean the internal parts, such as micro-switches and electrical connections, etc. Apply Alpha-Molykote "G"to the spiral groove of the switch actuating disc at the end of the motor.

14-128. REMOVAL OF CONTROL BOX.

a. Disconnect the Jones plug, the wire going to the bus and the harness going to the switch.
b. Remove the four machine screws and locknut and remove the control box.

NOTE

The control box is a transistorized unit which cannot be serviced in the field. Special Woodward Test Unit No. 213600 can be used to explore the control box and locate any malfunctioning.

NOTE

If an actuator is replaced because of shorted or open windings, the control box must also be replaced, unless it is determined that the box is undamaged.

14-129. INSTALLATION OF CONTROL BOX.

a. Install the control box to the mounting bracket and secure with four screws and locknuts.
b. Connect the wires going to the switch and airplane bus.
c. Connect the Jones plug and secure with safety wire, if it does not have retaining clips.

14-130. TEST EQUIPMENT. Various test equipment can be purchased from the Woodward Governor Company of Rockford, Illinois to help accomplish a complete check of the synchrophaser system. It is suggested that test instrument, P/N 213600, be purchased from Woodward to allow complete testing of the synchronizing portion of the system. A small test instrument, P/N WT-46192, can be built in the field from the diagram and parts list in Figure 14-49. This instrument has pulse indicating lights and jacks for checking voltages and ohm values only as given in Table XIV-XVI, Synchrophaser Wiring Test. Test instrument, P/N 213600, has pulse indicating lights, jacks for checking voltages and ohm values, and an oscillator system with which magnetic pickup output may be simulated. This allows partially checking the control box without running the engines.

NOTE

Use of any Woodward test equipment with the Woodward synchrophaser system will require the use of a Jones plug adapter. (Refer to Figure 14-48.)

14-131. BENCH TESTING THE ACTUATOR. (Refer to Table XIV-XVII.) Use an ohmmeter on the pins of the actuator disconnect. Zero the ohmmeter and read on the X1 scale. Table XIV-XVI, Steps 1 to 6, gives actuator test from the Jones plug through the harness to the actuator. See Propeller Synchrophaser Schematic and convert receptacle numbers in Table XIV-XVI to actuator leads and perform Steps 1 to 6 of Table XIV-XVI directly on actuator. Replace any actuator which does not meet the values given in Table XIV-XVI after bench testing.

If either test unit is plugged into the system during flight or ground testing, the pulsing and direction of pulsing of the actuator will be indicated by the flashing lights of the test unit. Refer to Table XIV-XVIII for description of control box malfunction or system defects which can be detected by the lights on the test units, along with the probable cause and suggested remedy.

TABLE XIV-XVII. BENCH TESTING THE ACTUATOR

TEST BETWEEN RECEPTACLE NUMBERS	OBTAIN		
		With Actuator Uncentered 180°	
	With Actuator Centered	Turn Clockwise (Facing Drive End) To Uncenter	Turn Counterclockwise (Facing Drive End) To Uncenter
D & C	open circuit (high resistance)	6.5 to 8.5 ohms	6.5 to 8.5 ohms
D & B	open circuit (high resistance)	closed circuit (0 ohms)	13 to 17 ohms
D & A	open circuit (high resistance)	13 to 17 ohms	closed circuit (0 ohms)
A & C	6.5 to 8.5 ohms	6.5 to 8.5 ohms	6.5 to 8.5 ohms
A & B	13 to 17 ohms	13 to 17 ohms	13 to 17 ohms
B & C	6.5 to 8.5 ohms	6.5 to 8.5 ohms	6.5 to 8.5 ohms

14-132. MAGNETIC PHASE PICKUP REMOVAL, INSTALLATION AND ADJUSTMENT.

a. Remove the engine cowling. (Refer to Section VIII or Section VIIIA.)
b. Disconnect electrical wiring from the magnetic pickup.
c. Remove the safety wire from the magnetic pickup locknut and remove locknut.
d. Remove magnetic pickup.
e. Install pickup in bracket and secure in position with locknut.
f. Rotate prop and insure targets do not hit pickup.

NOTE

Proper clearance between magnetic pickup and targets, should be .016 to .028 of an inch. Insure that the magnetic disc makes contact and not locknut. (Refer to Figure 14-44.)

g. Insure that all targets are within the clearance specified.
h. Safety wire locknut and connect the electrical wiring.
i. Install engine cowling. (Refer to Section VIII or Section VIIIA.)

TABLE XIV-XVIII. TROUBLESHOOTING CHART (ACTUATOR)

Trouble	Cause	Remedy
Double pulsing (both lights flashing simultaneously).	Excessive voltage spikes on bus caused by generator or other electrical accessory.	Repair the offending accessory.
	Malfunctioning control box.	Return to Woodward Governor Company for repair.
	Magnetic pickup voltage incorrect.	Reset to specific voltage.
Either or both lights on continuously.	Malfunctioning control box, actuator, or wiring.	Determine the malfunction with wiring check sheet.
No pulsing activity.	Malfunctioning control box.	Determine the malfunction with the wiring check sheet or 213600 test instrument.
Excessive pulsing in one direction.	Excessive torque required to trim the governor in one direction (this assumes the governor and propeller are equally responsive in each direction).	Check for high friction level or misalignment in the flex shaft or trimmer.

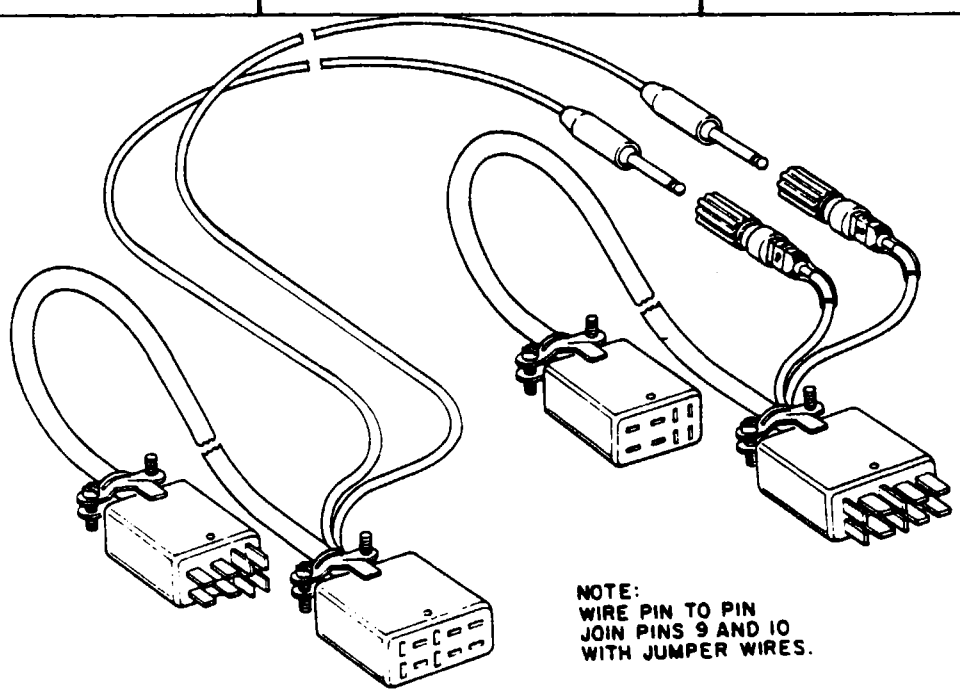

Figure 14-48. 10 Pin to 8 Pin Plug Adapters, P/N 5401-018

PARTS LIST FOR WT-46192 SYNCHRONIZER TEST INSTRUMENT

BOX:	(1)	Hammertone gray aluminum 3-1/4" x 2-1/8" x 1-5/8" Bud Box Co. P/N CU-2101-A
BANANA JACK:	(8)	H.H. Smith Co., type 1509 (black)
LAMP:	(2)	Dialco midget flange type white lens pilot lamp series no. 177-8430, type no. 0975-503 or Drake midget flange type white lens pilot lamp no. 5131-038-303
CABLE:	(6 ft.)	Vinyl covered plastic insulated cable, Belden types 8448 (8 #22 stranded wires)
GROMMET:	(1)	5/8" O.D. x 3/8" I.D. black rubber grommet
PLUG:	(1)	Cinch Jones 8 connector plug P/N P-308 CCT
SOCKET:	(1)	Cinch Jones 8 connector socket P/N S-308 CCT
BULB:	(2)	Bayonet type bulb Chicago miniature P/N 327

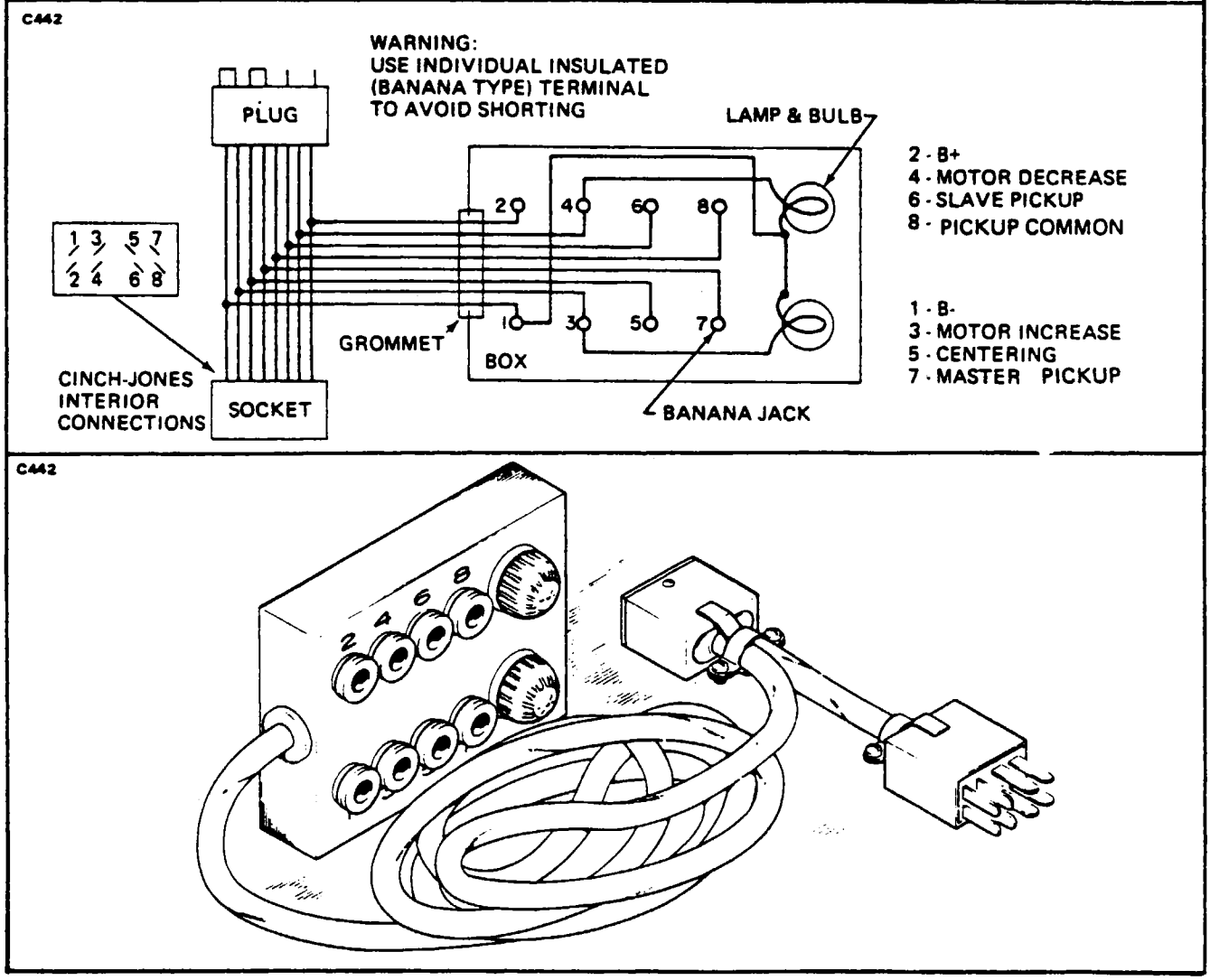

Figure 14-49. Test Instrument, WT-46192

TABLE XIV-XIX. TROUBLESHOOTING CHART (PROPELLER SYNCHROPHASER) (WOODWARD TYPE I)

Trouble	Cause	Remedy
Synchrophaser hunting.	Binding of the governor control arm, trimmer assembly, and/or rod end.	Correct any mechanical binding or replace Uniball of rod end if binding.
	Master governor speed is varying.	Overhaul governors.
Synchrophaser runs out of synchronization when turned on.	Reversed speed pickup leads or Jones plug leads.	Perform Steps 7 and 9 of test for defective pickup.
	Reverse motor leads to the actuator.	Check motor leads against the installation drawing.
	Intermittent shorts or pens in the pickup or its wiring.	Monitor pickup voltage produced. Replace defective pickup.
Synchrophaser will not center.	Malfunctioning slave governor pickup.	Replace pickup, adjust clearance or repair leads.
	Defective control box.	Replace control box.
	Mechanically misrigged.	Rerig.
	Defective centering mechanism. Switch arm bent.	Replace actuator.
	Defective centering switches.	Replace actuator.
	Rod end, flexible shaft or actuator mechanically bound up.	Reduce friction to an acceptable level.
Lack of range.	Improper rigging.	Rerig properly.
	Trying to synchrophase too close to a mechanical stop.	Adjust prop control lever in cockpit to move speed control lever further away from stop.
	Defective control box.	Replace the control box.
	Mechanical binding of trimmer or actuator.	Adjust trimmer or actuator to operate smoothly from stop to stop.

TABLE XIV-XIX. TROUBLESHOOTING CHART (PROPELLER SYNCHROPHASER) (WOODWARD TYPE I) (cont.)

Trouble	Cause	Remedy
Synchrophaser corrects in one direction only.	One side of actuator motor defective.	Replace actuator.
	One side of control box defective.	Replace control box.
	Mechanical binding in one direction.	Correct binding.
	Improper rigging.	Rerig.
Slow to synchrophase and won't hold synchrophasing.	Defective control box.	Replace control box.
	Excessive voltage spikes from other electrical accessory.	Repair offending electrical accessory.
	Excessive mechanical friction.	Correct mechanical binding.
Synchrophaser operates intermittently.	Excessive mechanical friction.	Decrease torque required to drive the trimmer.
	Intermittent short in pickup or wiring.	Repair pickup lead or replace pickup.
	Intermittent fault in control box.	Replace control box.
	Intermittent open in actuator or motor leads.	Replace actuator or repair leads.
	Defective electrical plug connector.	Replace plug connector.
	Excessive voltage spikes on bus from other malfunctioning electrical accessory.	Repair offending electrical accessory.

14-133. PROPELLER SYNCHROPHASER. (Woodward Type II)

14-134. DESCRIPTION OF PROPELLER SYNCHROPHASER SYSTEM. (Refer to Figure 14-50.) The Woodward Type II synchrophaser consists of a control box mounted in the cockpit, a coil incorporated in each primary governor, a magnetic pickup and a disc located near three phase targets for each engine that rotates with each propeller shaft.

The system operates on electronic impulses, generated by the disc target passing each magnetic pickup, being fed into the control box. This control box detects any difference in the electrical pulses which will cause the control box to change the governor speed setting by varying the coil voltage until the engine RPM's exactly match. Normal governor operation is unchanged, but the synchrophaser will continuously monitor and bias the governor speed setting to match engine RPM's.

The synchrophaser automatically matches the RPM's of the two engines and allows the pilot to select any desired phase relationship between the propellers. The RPM of one engine will follow changes in the RPM of the other engine within a predetermined limited range. This limited range feature prevents either engine from losing more thn a fixed amount of RPM in case the other engine is feathered while the synchrophaser is "ON". In no case will the RPM follow beyond that selected by the prop control lever.

The propeller synchrophaser "ON-OFF" switch and the phase adjuster control are combined on a single knob protruding from the instrument panel just above the control levers. After takeoff manually synchronize the propellers and then turn the synchrophaser "ON". When making propeller speed changes, such as from climb to cruise, switch the synchrophaser "OFF" move the propeller levers to the desired setting and manually synchronize, then turn the synchrophaser back "ON". Whenever an engine is to be feathered or during takeoff or landing, the synchrophaser must be turned "OFF".

14-135. FUNCTIONAL TEST. This test should be done in flight. First synchronize the propellers manually, and then switch the synchrophaser "ON". Now slowly adjust either propeller governor control lever, in small increments to increase and decrease the RPM. The RPM range over which the engines will remain synchronized is the limited range. With the synchrophaser "OFF", establish a maximum of 15 rpm difference between propeller RPM's. Turn the synchrophaser "ON" and synchronization will result. Once synchronization is established the synchrophaser will have a range of approximately 35 rpm in cruise. Slowly turn knob to the "PHASE SELECT" position and audibly observe phase shift.

14-136. TROUBLESHOOTING WITH MINIMUM FIELD EQUIPMENT. The following information will help locate system malfunction in the field with the minimum amount of equipment. The usual mechanics tools and an ohmmeter and voltmeter are all that is needed.

14-137. GROUND CHECK. (Refer to Figure 14-50.)

a. Ascertain that the master switch is "ON" and the circuit protector is not tripped. Also, determine that the Jones plug receptacle is properly mated with the plug in the airplane's wiring harness. The two halves of the Jones plug should be safety wired together if it does not have retaining clips.

b. Separate the Jones plug and complete the tests listed in Table XIV-XX, Synchrophaser Wiring Test. Complete each step regardless of how recently the installation was made.

NOTE

Before starting this test, be sure the control box is unplugged, the master switch is off, and the synchrophaser circuit protector is pulled.

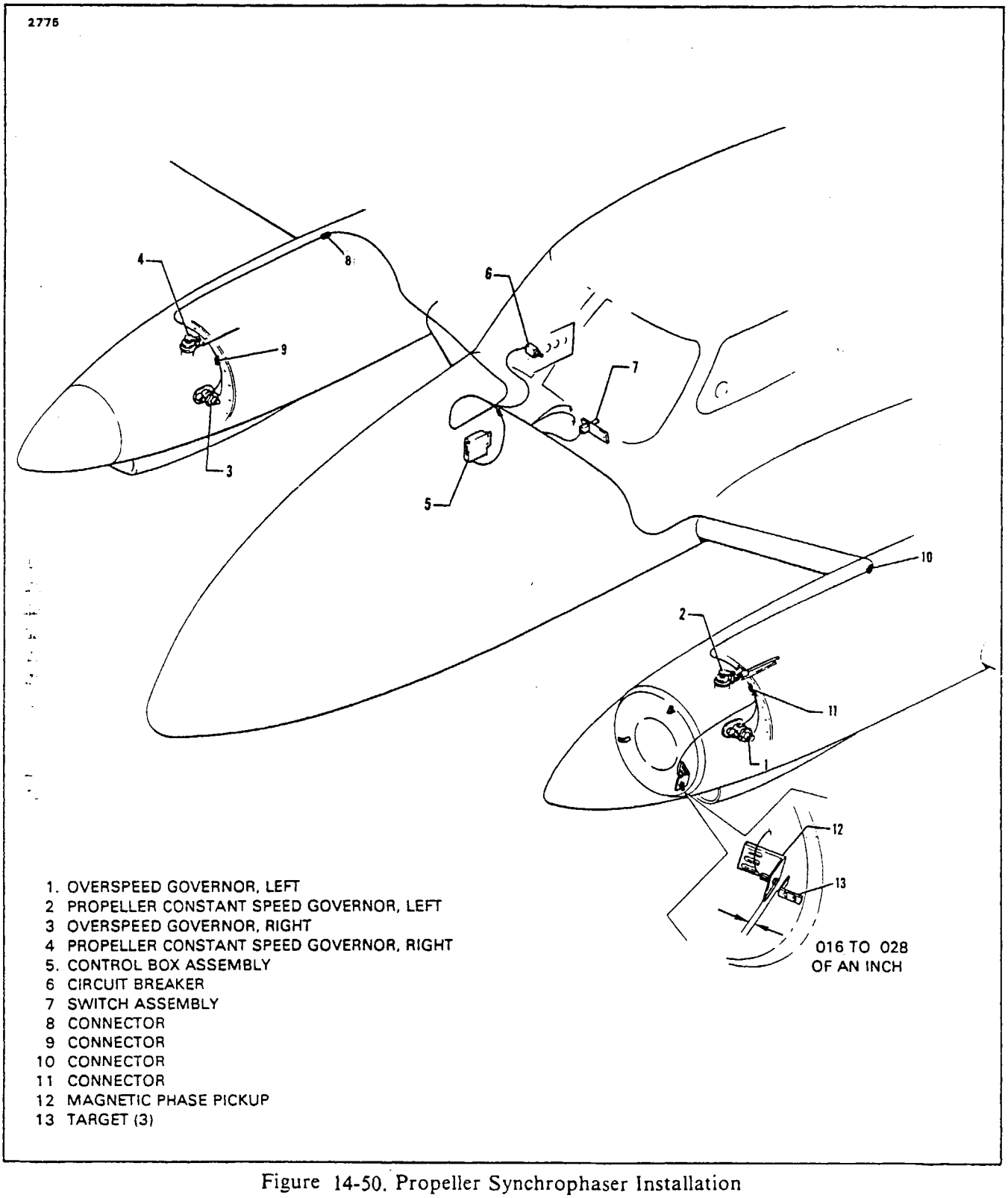

Figure 14-50. Propeller Synchrophaser Installation
(Woodward Type II)

CAUTION

Do not plug in control box until this test has been satisfactorily completed. Even with the switch OFF, the box could be seriously damaged.

NOTE

Make the test, using an ohmmeter to a fabricated Jones pigtail connected to the Jones plug socket. Zero the ohmmeter and read on the X1 to X10 scale.

NOTE

If another accessory uses the same circuit protector, turn this accessory off before starting tests. The control box must be unplugged for these tests also.

CAUTION

Do not probe the Jones plugs with anything thicker than .045 of an inch in diameter. Insert and remove probe carefully. Failure to do so will result in loose pin connections and faulty synchrophaser operation.

TABLE XIV-XX . SYNCHROPHASER WIRING TEST (WOODWARD TYPE II)

NOTE

Resistance readings may be 20% higher during heat soak following shutdown.

TEST BETWEEN RECEPTACLE NUMBERS	OHMMETER READING 24 VOLT SYSTEM
1 and aircraft ground	0 - ohms
2 and aircraft ground	open circuit
3 and aircraft ground	90-110 ohms
4 and aircraft ground	open circuit
5 and aircraft ground	90-110 ohms
6 and aircraft ground	open circuit
7 and aircraft ground	open circuit
8 and aircraft ground	open circuit
4 and 8	140-190 ohms
6 and 8	140-190 ohms

c. When the system meets all of the above test values, turn the master switch "ON" and reset the synchrophaser circuit breaker (control box must still be unplugged) and make the following voltage check.

TABLE XIV-XX . Synchrophaser Wiring Test (WOODWARD TYPE II) (cont.)
VOLTAGE CHECK

TEST BETWEEN RECEPTACLE NUMBERS	VOLT METER READINGS
2 and 1	Same as supply voltage and polarity of Pin 2 must be positive & pin 1 negative

d. When the system checks out according to the above tests the control box may be connected.

14-138. FLIGHT CHECKS. Perform the functional test in accordance with Paragraph 14-135. If the system will not pass this test, try the following steps:

a. With the synchrophaser ON, see if the synchrophaser action is affected by RPM and/or power setting, particularly at lower cruise RPM and power settings. This would indicate a possibly unacceptably rough governor drive. If operation at lower RPM results in improved synchrophasing, the drives to the governors should be investigated.

b. Reduce the electrical load. Turn off all electrical equipment including the alternators. Leave the master and synchrophaser switches ON. If the synchrophasing improves, there is a possibility that abnormal voltage spikes on the bus from some other electrical accessory have been upsetting the synchrophaser. Isolate the offending electrical accessory and repair it. If the trouble has been traced to the control box, exchange it for another unit.

NOTE

If troubles still persist with the system, it should be checked by an approved governor overhaul station or the Woodward Governor Company.

14-139. OHMMETER CHECK OF MAGNETIC PICKUP. The following check is used to determine whether or not a magnetic pickup is defective.

CAUTION

Before performing this check make certain there is no current flowing in the circuit.

a. Disconnect the pickup leads from the control box connector.

b. Set the ohmmeter to RX1 or RX10 scale and connect the meter probes across the pickup leads.

c. The meter should read 50 to 60 ohms. The pickup must be replaced if the above reading is not obtained.

d. To check the voltage output of the governor magnetic pickup, an oscilloscope or Woodward Test Instrument part number 213599 is required.

TABLE XIV-XXI. MAGNETIC PICKUP VOLTAGE OUTPUT TEST.

TEST BETWEEN RECEPTACLE NUMBERS	RPM SETTING	VOLTS A.C. PEAK TO PEAK
5 and 1/3 and 1	Cruise	3 V.A.C.
5 and 1/3 and 1	Minimum cruise	Not less than 2 V.A.C
5 and 1/3 and 1	Maximum cruise	Not less than 10 V.A.C.

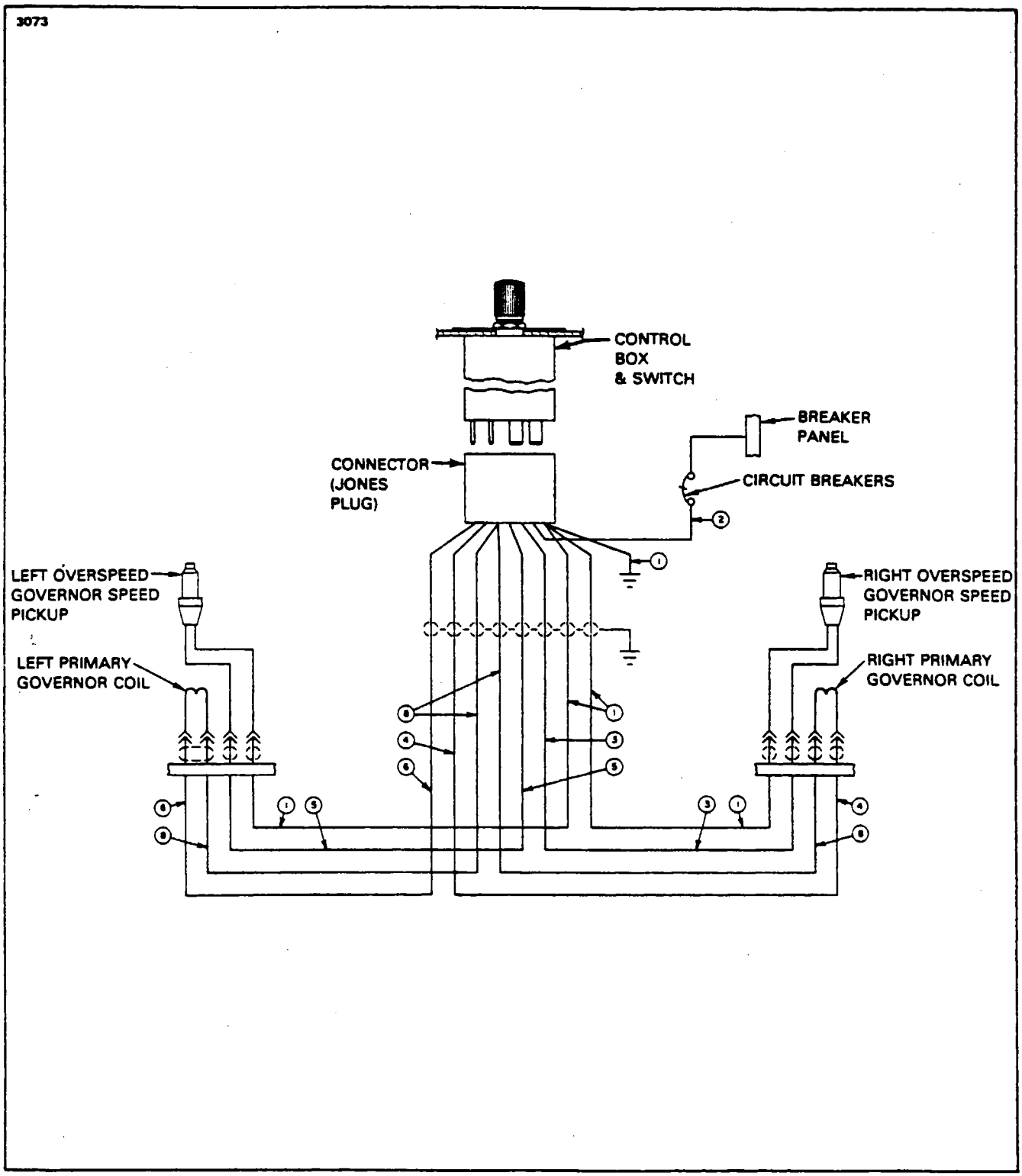

Figure 14-51. Propeller Synchrophaser Diagram (Woodward Type II)

14-140. REMOVAL OF CONTROL BOX.

a. Disconnect the Jones plug, the wire going to the bus and the harness going to the switch.
b. Remove the four machine screws and locknut and remove the control box.

NOTE

The control box is a transistorized unit which cannot be serviced in the field. Special Woodward Test Unit No. 213618 can be used to explore the control box and locate any malfunctioning.

14-141. INSTALLATION OF CONTROL BOX.

a. Install the control box to the mounting bracket and secure with four screws and locknuts.
b. Connect the wires going to the switch and airplane bus.
c. Connect the Jones plug and secure with safety wire, if it does not have retaining clips.

14-142. MAGNETIC PHASE PICKUP REMOVAL, INSTALLATION AND ADJUSTMENT.

a. Remove the engine cowling. (Refer to Section VIII or Section VIIIA.)
b. Disconnect electrical wiring from the magnetic pickup.
c. Remove the safety wire from the magnetic pickup locknut and remove locknut.
d. Remove magnetic pickup.
e. Install pickup in bracket and secure in position with locknut.
f. Rotate prop and insure targets do not hit pickup.

NOTE

Proper clearance between magnetic pickup and targets, should be .016 to .028 of an inch. Insure that the magnetic disc makes contact and not locknut. (Refer to Figure 14-50.)

g. Insure that all targets are within the clearance specified.
h. Safety wire locknut and connect the electrical wiring.
i. Install engine cowling. (Refer to Section VIII or Section VIIIA.)

14-142a. PROPELLER AUTOFEATHER SYSTEM.

14-142b. DESCRIPTION AND PRINCIPLES OF OPERATION. The propeller autofeather system provides automatic propeller feathering should engine failure be experienced at any time after the power levers have been advanced for flight and the system arming conditions have been met.

A two position AUTOFEATHER ARM switch is mounted on the lower left portion of the instrument panel adjacent to the pedestal. This switch is used to arm the autofeather system and has two positions labeled ARM and OFF. Additionally, an AUTOFEATHER TEST switch is located immediately to the right of the AUTOFEATHER ARM switch. This switch is used to ground test the system prior to flight. It has two positions labeled L and R. Two lights are located in the annunciator panel. One is green and is labeled ARM-AUTOFEATHER. The other is amber and labeled FAIL-AUTOFEATHER. Circuit protection is provided by a push-to-reset type circuit breaker in the nonessential circuit breaker panel on the left sidewall.

The logic signals which arm the autofeather system are power lever position, torque, torque differential and engine bleed air pressure. To arm the system, the AUTOFEATHER ARM switch must be in the ARM position, both power levers must be above the 80% Ng position, both torquemeters must exceed 600 ft.-lbs., the torque differential between each engine must be less than 500 ft.-lbs., and both bleed air pressures must exceed 22 psi. Any time the system is armed the green ARM-AUTOFEATHER light will be illuminated. For an engine to autofeather, the system must be armed, it must sense a torque difference between engines of at least 500 ft.-lbs., a drop of bleed air pressure below 17 psi and torque below 600 ft.-lbs. When an autofeather occurs the ARM-AUTOFEATHER light will extinguish and the propeller will feather and decelerate to a stop or a slow rotation (dependent upon airspeed) in approximately 10 seconds. Once an autofeather occurs the system will not autofeather the other engine.

If any of the logic signals fail, the system will not arm. If the computer internally senses a logic signal failure, the FAIL-AUTOFEATHER light will illuminate. In either case the system should be turned to OFF pending troubleshooting and repair. The autofeather system must be preflight operational checked prior to TAKEOFF. (Refer to Pilot's Operating Handbook.)

NOTE

Retarding either power lever prior to the affected engine's propeller autofeathering, may inhibit the autofeather system.

14-142c. AUTOFEATHER GROUND OPERATIONAL CHECK. The ground operational check must be performed with both engines at idle RPM, propeller controls forward, bleed air on, generators on, with regulated aircraft voltage and the autofeather circuit breaker pushed in.

a. Place the AUTOFEATHER OFF-ARM switch in the ARM position.

b. Depress the annunciator press-to-test switch located in the upper left instrument panel and observe whether the ARM-AUTOFEATHER light and the FAIL-AUTOFEATHER light are illuminated.

c. Release the switch and observe whether the lights are extinguished.

d. Using the autofeather test switch located on the lower left instrument panel adjacent to the pedestal, feather the left engine propeller.

e. Move the switch to the center "OFF" position and observe that the prop unfeathers.

f. Move the test switch to the right and observe that the right engine propeller feathers.

g. Return the switch to the center "OFF" position and observe that the prop unfeathers.

h. Advance the power lever to 80% Ng and observe that the ARM-AUTOFEATHER light is illuminated.

i. Return the engines to idle RPM.

14-142d. AUTOFEATHER ELECTRICAL SYSTEM GROUND CHECKS.

a. Remove the avionics bay access cover.

b. Locate the autofeather computer at F.S. 30.0 (approx.) and remove connector E411 from the computer.

c. Determine that the autofeather circuit breaker, located on the right (non-essential circuit breaker panel), is pushed in.

d. Establish 28 VDC electrical power on the non-essential bus.

e. Place the AUTOFEATHER OFF-ARM switch, located on the lower left instrument panel, in the ARM position.

f. Using a MULTIMETER perform the following test:

Test Between Connector E411 Receptacle Numbers	Multimeter Reading
21 and aircraft ground	28 VDC
28 and aircraft ground	Ground (0 ohms)
1 and aircraft ground	Open (high resistance)
2 and aircraft ground	Open (high resistance)
5 and aircraft ground	Open (high resistance)
6 and aircraft ground	Open (high resistance)
7 and aircraft ground	Open (high resistance)
8 and aircraft ground	Open (high resistance)
18 and 20	High resistance
11 and 15	0 ohms
11 and 9	0 ohms
14 and 10	0 ohms
14 and 12	0 ohms
23 and 25	High resistance
4 and 26	30 ohms
22 and 27	30 ohms
13 and 19	High resistance

g. Upon successful completion of the above tests, turn the AUTOFEATHER OFF-ARM switch to the OFF position and remove the power from the aircraft circuits.

h. Reconnect connector E411 to the autofeather computer.

i. Reinstall the avionics bay access cover.

TABLE XIV-XXII TROUBLESHOOTING CHART (PROPELLER SYNCHROPHASER) (WOODWARD TYPE II)

Trouble	Cause	Remedy
Synchrophaser inoperative.	Defective power lead or circuit breaker.	Repair lead or replace circuit breaker.
	Defective ground lead.	Repair lead.
	Magnetic pickup "OPEN" or "SHORTED" to ground.	Replace governor.
	Pickup wiring or connector "OPEN" or "SHORTED" to ground.	Repair wiring or connector.
	Faulty receptacle half at system connector.	Replace connector.
	Control box defective.	Replace control box.
RPM Surge or Hunt (See Note)	NOTE	
	Magnitude and frequency of speed hunt will vary depending on which coil is defective and whether the basic governor speed setting of that governor is equal to, higher than, or lower than the other governor.	
	Sync coil, leads, aircraft wiring or connectors "OPEN".	Replace governor or repair or replace leads, wiring or connector.
	Sync coil, leads, aircraft wiring or connectors "SHORTED" together. Results in permanent control box damage	Replace governor or repair or replace leads, wiring or connector. Replace control box after testing 1 thru 10. (Refer to Table XIV-XX.)
Left engine increases RPM out of sync when synchrophaser is turned "ON."	Left coil, coil lead, associated wiring or connector grounded. Left pickup output low.	Replace governor or repair or replace wiring or connector.

TABLE XIV-XXII. TROUBLESHOOTING CHART (PROPELLER SYNCHROPHASER) (WOODWARD TYPE II)

Trouble	Cause	Remedy
Right or left engine increases RPM out of sync when synchrophaser is turned "ON".	Pickup or associated wiring on engine which increases "OPEN." Pickup output low.	Repair "OPEN" wiring or replace governor.
Insufficient synchrophaser range.	Right coil, coil lead, associated wiring or connector grounded.	Replace governor; repair wiring; repair or replace connector.
System synchrophases but is marginally stable.	Pickup or coil leads swapped between left and right engines.	Correct wiring per wiring schematic, Figure 14-51.
Circuit Breaker "Trips"	Power lead short or defective control box.	Remove fault. Replace control box after testing 1 thru 10.
Synchrophaser corrects in one direction only.	One side of control box defective.	Replace control box.
Slow to synchrophase and won't hold synchrophasing.	Defective control box.	Replace control box.
	Excessive voltage spikes from other electrical accessory.	Repair offending electrical accessory.
Synchrophaser operates intermittently.	Intermittent short in pickup or wiring	Repair pickup lead or replace pickup.
	Intermittent fault in control box.	Replace control box.
	Defective electrical plug connector.	Replace plug connector.
	Excessive voltage spikes on bus from other malfunctioning electrical accessory.	Repair offending electrical acessory.

14-143. ENGINE COMPARTMENT FIRE CONTROL.

14-144. FIRE DETECTION SYSTEM.

14-145. GENERAL. A fire detection system is provided for each engine. In the event of an engine compartment fire, thermal detector units installed in the nacelle actuate and complete an electrical circuit, illuminating the master caution warning light, sounding a warning horn and illuminating the appropriate engine fire warning light on the annunciator display.

14-146. DESCRIPTION AND OPERATION. Each engine fire detection system consists of three fire detecting thermal units and their interconnecting harness. Two of these units are located on each side of the front fire seal in the hot section, and one located at the bottom of the rear fire seal in the accessory section. The thermal units actuate at a temperature of 450°F. Whenever the contacts in any one of the thermal units is actuated (due to a fire condition) the circuit is completed, causing the master caution light to blink, a horn to blow, and the engine fire warning light to show on the annunciator display. The horn and flashing light may be deactivated by pressing on the master caution light.

The TEST switch, when pressed, connects the interconnecting harnesses of each engine system in series and completes a circuit through the annunciator display to ground thus checking the continuity of the system and the operation of the left and right engine fire warning lights on the annunciator.

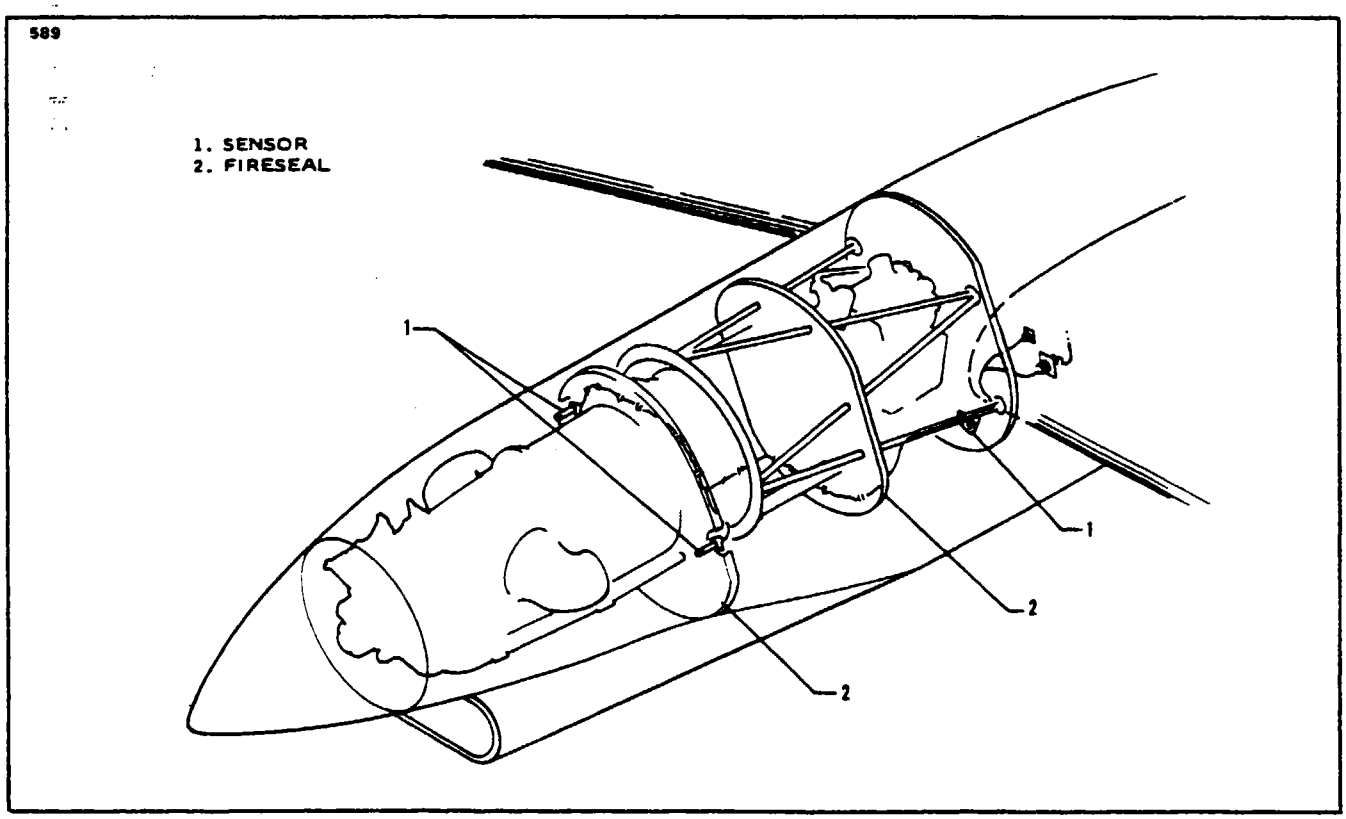

Figure 14-52. Engine Fire Detectors

14-147. FIRE EXTINGUISHING SYSTEM.

14-148. GENERAL. The fire extinguishing system consists of an independent system for each engine. Each system has a switch located to the left of the pilot, which, when actuated, electrically discharges the fire extinguisher bottle for that system. The extinguishing agent is directed by a tube into the appropriate engine compartment.

14-149. DESCRIPTION AND OPERATION. Each engine fire extinguishing system consists of a spherical container (bottle) that stores the fire extinguishing agent (Halon 1301) charged to 360 +25 -0 psig at 70° F with dry nitrogen. A pressure gauge mounted on the side of the bottle indicates the internal (charged) pressure. Each bottle is mounted on the right side of each rear fire seal in the accessory section of the engine nacelles. A main discharge pipe extends from a valve on the bottom of the bottle, forward, through the rear and front fire seals to the "hot section" of the engine. An additional tube extends from the main discharge pipe and passes aft through the rear fire seal and terminates at the top of the engine accessory section.

An electrically operated cartridge (firing squib), screwed into the discharge valve at the base of the bottle, provides the means of releasing the extinguishing agent. When the switch in the cockpit is actuated, the firing squib in the discharge valve is detonated, which inturn punctures the seal in the discharge valve allowing the release of the extinguishing agent through the pipes. The container (bottle) also has a combination fill fitting and safety relief valve assembly. If ambient temperature should rise abnormally (215°F to 226°F), a fusible check valve within the fill fitting melts, thus relieving the contents of the container (bottle) and avoiding any possible bursting of the container.

14-150. TESTING EXTINGUISHING SYSTEM.

a. A quick check may be made of the system electrical circuit by turning the aircraft master switch ON and press the annunciator display test switch. Verify that the left and right engine fire extinguisher inoperative indicator lights are operating. A more thorough check is found in the following steps:

b. Assure all aircraft electrical power is off and that all circuit breakers are disengaged.

c. Disconnect the electrical wiring harness from the fire extinguisher squib in one engine compartment and connect a test lamp across the disconnected wires of the harness.

d. Reset circuit breakers; turn master switch ON.

e. Engage the appropriate engine fire extinguisher switch in the cockpit and verify that the test lamp illuminates.

f. Reset fire extinguisher switch; turn master switch OFF; disengage circuit breakers and disconnect the test lamp.

g. Connect a squib tester (Model 115 squib test, American Standard, Monrovia, California) to the squib terminals and check for a nominal resistance of 1.15 ± 0.25 ohms. Disconnect the squib tester.

WARNING

Do not use a volt-ohmmeter, battery powered continuity light, or any similar device in an attempt to test the squib assembly. Use of test devices which pass more than 30 MA may detonate the squib.

h. Assure aircraft electrical system is deactivated; then reconnect system wiring to squib assembly terminals, insuring ground wire is connected to ground terminal.

i. Repeat Steps "a" through "i" for opposite engine.

j. A pressure check of the fire extinguisher containers should be made periodically to determine that the pressure is between the minimum and maximum limits prescribed by the manufacturer. Refer to the Pressure-Temperature Correction Table on the container (bottle) or refer to Chart XIV-XXIII

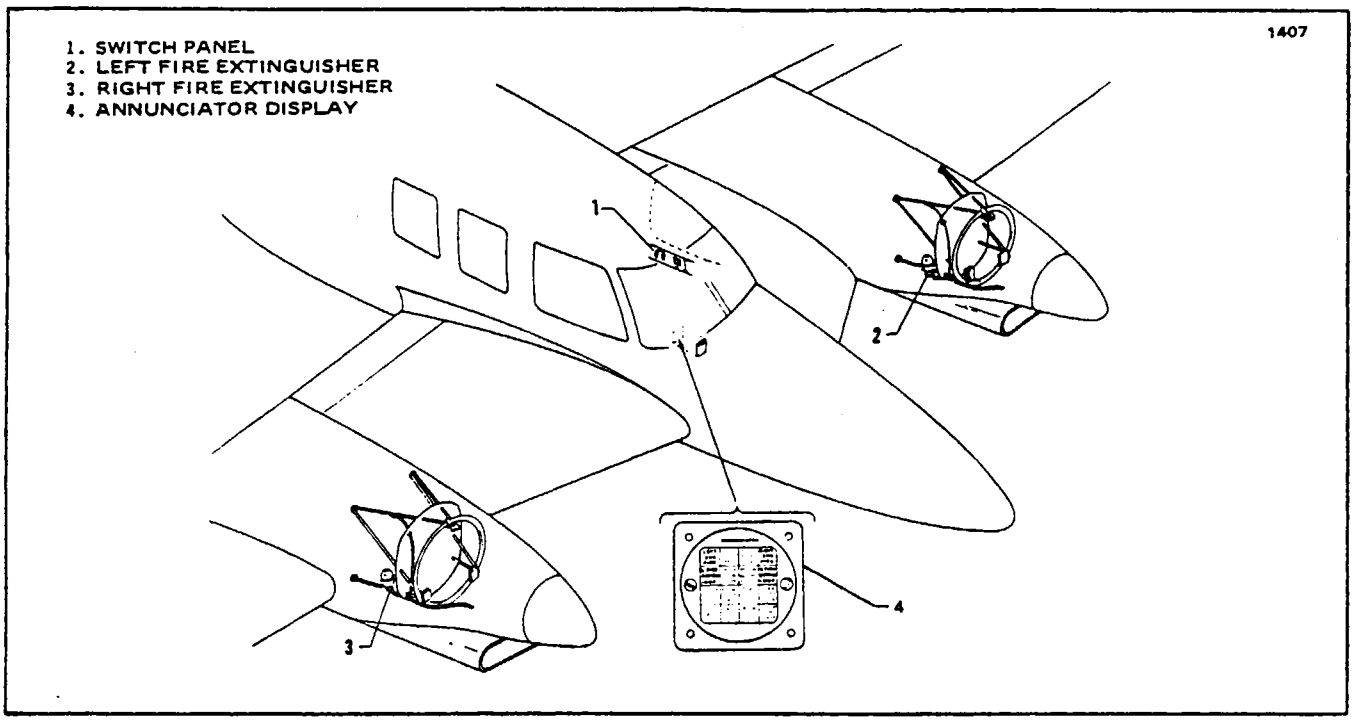

Figure 14-53. Engine Fire Control System

NOTE

Changes of pressure with ambient pressure must fall within the prescribed limits. If pressures do not fall within the prescribed limits, the extinguisher container should be replaced.

14-151. REMOVAL OF FIRE EXTINGUISHER BOTTLE.

a. Assure aircraft master switch is OFF, and fire extinguisher circuit breaker is disengaged.
b. Remove upper and lower engine cowling.
c. Disconnect the three wires that connect the squib unit with the aircraft harness.

CAUTION

Charged bottles must be handled with care to avoid damaging the seal. Do not bring any electrical current in contact with the terminals on the squib assembly of a loaded unit or accidental detonation could result.

d. Disconnect the discharge pipe at the fire seal fitting and also remove the nut and washer from the fitting on the forward side of the fire seal.

CAUTION

Frostbite or low temperature burns will result if Halon 1301 (Bromotrifluoromethane CBrF3) comes in contact with the skin.

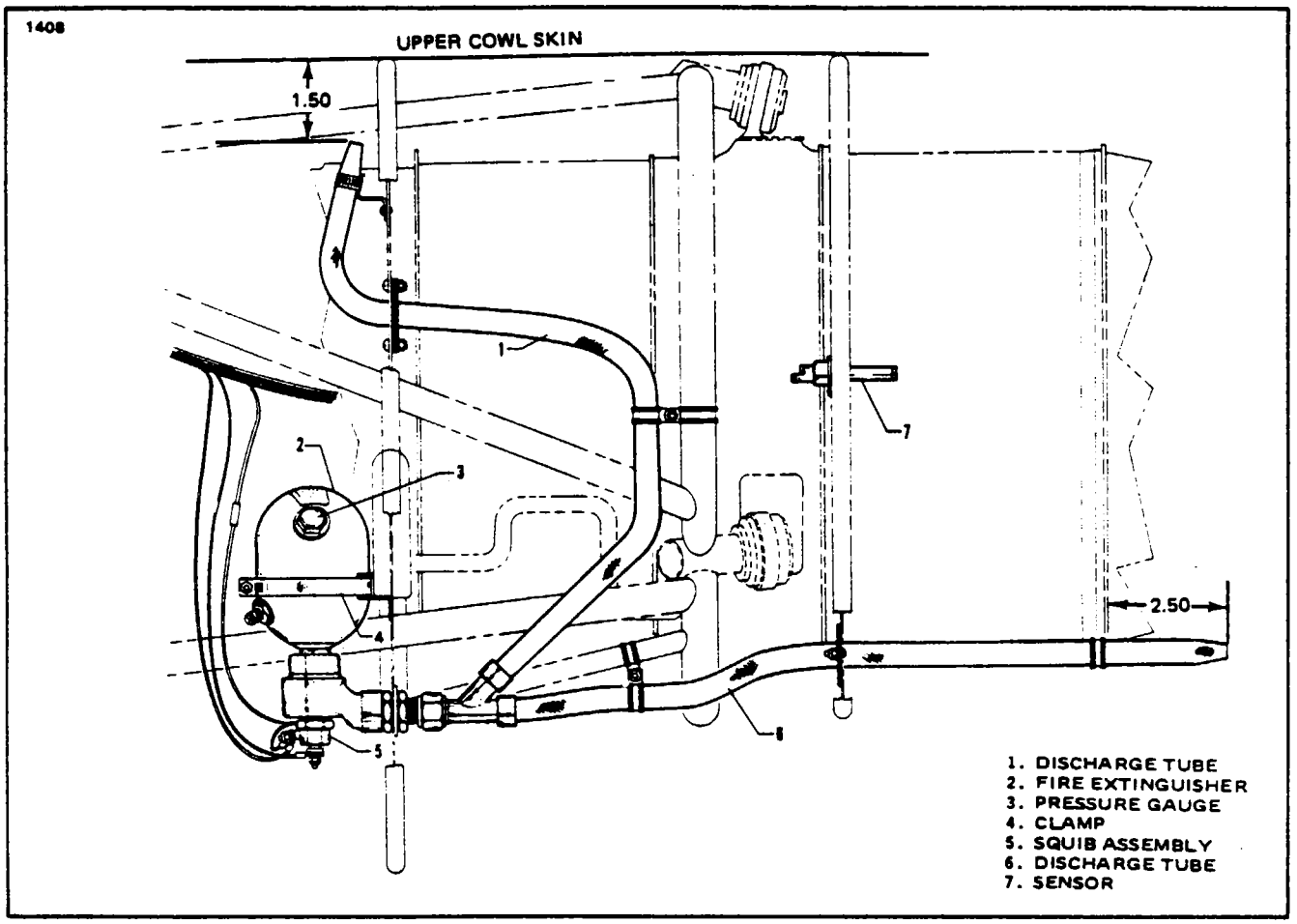

Figure 14-54. Engine Fire Extinguisher

e. Support the bottle; loosen the mounting clamp and remove the bottle. The fitting may then be removed from discharge port of the squib housing.

14-152. SERVICING FIRE EXTINGUISHER BOTTLE.

a. Check for evidence of leakage or damage to the container.

b. If the bottle is not being removed for the purpose of replacement, it should be weighed and must fall within 0.25 pounds of the total weight stamped on the data plate.

c. If the bottle is found underweight or damaged, it must be replaced with a serviceable unit.

d. Check the indicated pressure reading on the fire extinguisher bottle. The pressure of a serviceable unit should be within the specifications given in Table XIV-XXIII.

TABLE XIV-XXIII. PRESSURE-TEMPERATURE CORRECTION

Temperature	-60	-40	-20	0	+20	+40	+60	+80	+100	+120
Ind. Pressure	110 134	127 155	148 180	174 212	207 251	249 299	304 354	367 417	442 492	532 582

14-153. INSTALLATION OF FIRE EXTINGUISHER.

a. Install the connector fitting into the squib housing and tighten.

b. Locate the bottle into its proper position with the discharge tube connector fitting protruding through the hole in the fire seal.

c. Secure the bottle in place by tightening the clamp and installing nut and washer on the fitting that protrudes through the fire seal.

d. Connect and secure the discharge pipe to the fire seal fitting.

e. Ascertain the placement of the discharge nozzles per dimensions shown in Figure 14-54. It is important that the nozzles be positioned as shown to obtain proper dispersal of the extinguishing agent.

f. Check and make sure that all aircraft electrical power is OFF; then connect the wires to their proper terminals on the squib assembly.

g. Install engine cowling.

h. Turn aircraft electrical system ON and press annunciator test switch and verify the lighting of the left and right engine fire extinguisher inoperative indicator lights are operating.

14-154. FIRE EXTINGUISHER, HAND HELD. A portable fire extinguisher is mounted to the seat frame beneath the pilot's seat. The extinguisher is suitable for use on liquid or electrical fires. It is operated by aiming the nozzle at the base of the fire and squeezing the trigger grip. Releasing the trigger automatically stops further discharge of the extinguishing agent. Read the instructions on the nameplate and become familiar with the unit before an emergency situation. The dry powder type extinguisher is fully discharged in about 10 seconds, while the Halon 1211 type is discharged in 15 to 20 seconds.

WARNING

The concentrated agent from extinguishers using Halon 1211 or the by-products when applied to a fire are toxic when inhaled. Ventilate the cabin as soon as possible after fire is extinguished to remove smoke or fumes. Use oxygen, if necessary.

14-155. PORTABLE FIRE EXTINGUISHER, INSPECTION AND MAINTENANCE.

a. It is recommended that the fire extinguisher be inspected monthly or in accordance with the manufacturer's instructions on the label attached to the fire extinguisher.

b. When inspecting the fire extinguisher, check the following items:

1. Check that the inspection tag is present and has been updated.
2. Check that the locking ring is firmly in place and has not been tampered with.
3. Check for cleanliness, dents, scratches, damage and corrosion. If found, take extinguisher to a qualified dealer or distributor for testing and/or repair.
4. Check the discharge nozzle for cleanliness and clogging.
5. Check for a full charge. Check the charge weight noted on the nameplate with an appropriate scale.
6. Check that the gauge indicator is in the green service pressure section.

THIS PAGE INTENTIONALLY BLANK

APPENDIX

WINDOW INSPECTION AND REPAIR — STANDARD PRACTICES

1. **Window Inspection.**

a. DEFINITIONS. The following apply to all cockpit and cabin windows.

Critical	The viewing area of the windshields used for taxiing, takeoff, climb, cruise, and landing.
Semi-Critical	The viewing area used for general flight vision.
Non-Critical	Viewing areas not normally used for flight operations.
Distortion	Lines in windows or windshields that cause waviness in objects when looking through the window or windshield.
Crack	Critical narrow break, fissure, or separation extending through the entire thickness of the transparent material.
Craze	Fissure on the surface of the transparent material that does not penetrate the full thickness of the material.
Crazing	Mesh of fine hairline cracks that do not penetrate the full thickness of the material, located on the surface or within the structure of the transparent material.
Star Craze	A condition where several fissures radiate from a central point.
Wedge	A condition in a piece of optical glass having a progressive variation in thickness or absorption from one side to the other.
Scratch	An abrasion on the surface of the material caused by contact with rough abrasives or sharp objects.
Hairline Scratch	Visible scratch undetectable when passing a fingernail over the scratch. Considered non-critical other than being an appearance defect.
Light Scratch	A scratch measuring less than 0.010 inch (0.254 mm) deep. Can be detected when passing a fingernail over the scratch. Considered non-critical except for appearance.
Heavy Scratch	A scratch measuring more than 0.010 inch (0.254 mm) deep. Can be detected when passing a fingernail over the scratch. This type of scratch may be accompanied by chipping along the edge. Considered critical when occurring to inner glass ply. Considered semi-critical when occurring to outer glass ply within certain limitations (see inspection criteria). Considered non-critical within certain limitations (see inspection criteria) when occurring to acrylic surfaces.
Chip	A chip is considered a small scratch.
Haze	A foggy appearance located on the surface of the transparent material.
Blemish	Speck, air bubble, or other minor imperfection imbedded in the transparent material.
Mark-Off	An almost nonexistent shallow depression on the surface possessing practically no depth. Discernible only due to a noticeable rim or roughened surface caused by mold surface defects transferred to the surface during the forming operation.
Delamination	Visible evidence of a physical break of the bond between the plastic interlayer and either glass ply. Delamination may be caused by laminating stresses, preload on installation, or excessive heat.

b. CRITICAL AREA INSPECTION - GLASS WINDSHIELDS. A critical area is the area of the laminated glass windshields used for taxiing, takeoff, climb, cruise, and landing.

(1) Cracks could occur in either the inner, outer, or both panes. Cracking in either pane is critical and cause for immediate replacement.

(2) Crazing.

(a) Crazing in the windshields is critical.
(b) Determine depth of craze using a calibrated depth gauge or scale (see Figure 14-APP-1).
(c) A craze of 0.062 inch (1.575 mm) depth is cause for immediate replacement. A craze of 0.031 inch (0.787 mm) depth is cause for replacement at the earliest opportunity.
(d) Crazing in any portion of the windshields requires replacement.

(3) Blemishes.

(a) Blemishes in windshields form in the vinyl plastic interlayer bonding the two glass panes together.
(b) Blemishes in the critical or semi-critical portion of the windshields are not acceptable unless 0.062 inch (1.575 mm) or smaller in circumference, including distorted area.
(c) No more than two blemishes, at least 12 inches (30.48 cm) apart are acceptable in the windshields.
(d) No more than two blemishes within a two inch (5.08 cm) area along the upper portion of the windshields are acceptable.

(4) Haze or foggy appearance on the glass is not acceptable if the amount of haze/fog causes an obstruction of vision in the area used for operation of the aircraft.

(5) Scratches.

(a) A scratch, no longer than 0.062 inch (1.575 mm) long and no deeper that 0.020 inch (0.508 mm) is acceptable.
(b) Heavy scratches on either glass ply are cause for immediate windshield replacement.
(c) Hairline scratches may be waxed and buffed out.

(6) Delamination.

(a) Cloudy or milky appearance in the delamination indicates moisture or solvent penetration. Windshields with this condition should be replaced at the earliest opportunity.
(b) Delaminated areas characterized by irregular or jagged boundaries indicate uneven separation of the vinyl and glass. This condition may cause the vinyl to pull chips from the inner glass surface, resulting in failure of the glass ply. Conduct periodic inspections to determine if the damage is progressive or if chipping of the inner glass surface is present.

(7) Mark-Off of such low intensity that vision quality is not impaired and that is not visible when looking through the windshield is acceptable.

(8) Distortion. Slight horizontal distortion is acceptable, if: there are no more than two lines; they do not occupy more than 25 percent of the windshield area, and; they are separated by a minimum of six inches (15.24 cm).

c. SEMI-CRITICAL AREA INSPECTION - GLASS WINDSHIELD, COCKPIT ACRYLIC WINDOWS. Semi-critical areas are the perimeter of the glass windshield and areas of cockpit acrylic windows used for general flight vision.

(1) Mark-Off of such low intensity that vision quality is not impaired and that is not visible when looking through the windshield is acceptable.

(2) Distortion.

(a) A moderate amount of distortion is acceptable along the lower portion of the windshield if no more than 1.5 inches (3.81 cm) above the windshield retrainer strip.
(b) Distortion may not be so severe that it restricts vision or diverts runway lines or section lines more than 45°.
(c) Slight horizontal distortion is acceptable, if: there are no more than two lines; they do not occupy more than 25 percent of the windshield area, and; they are separated by a minimum of six inches (15.24 cm).

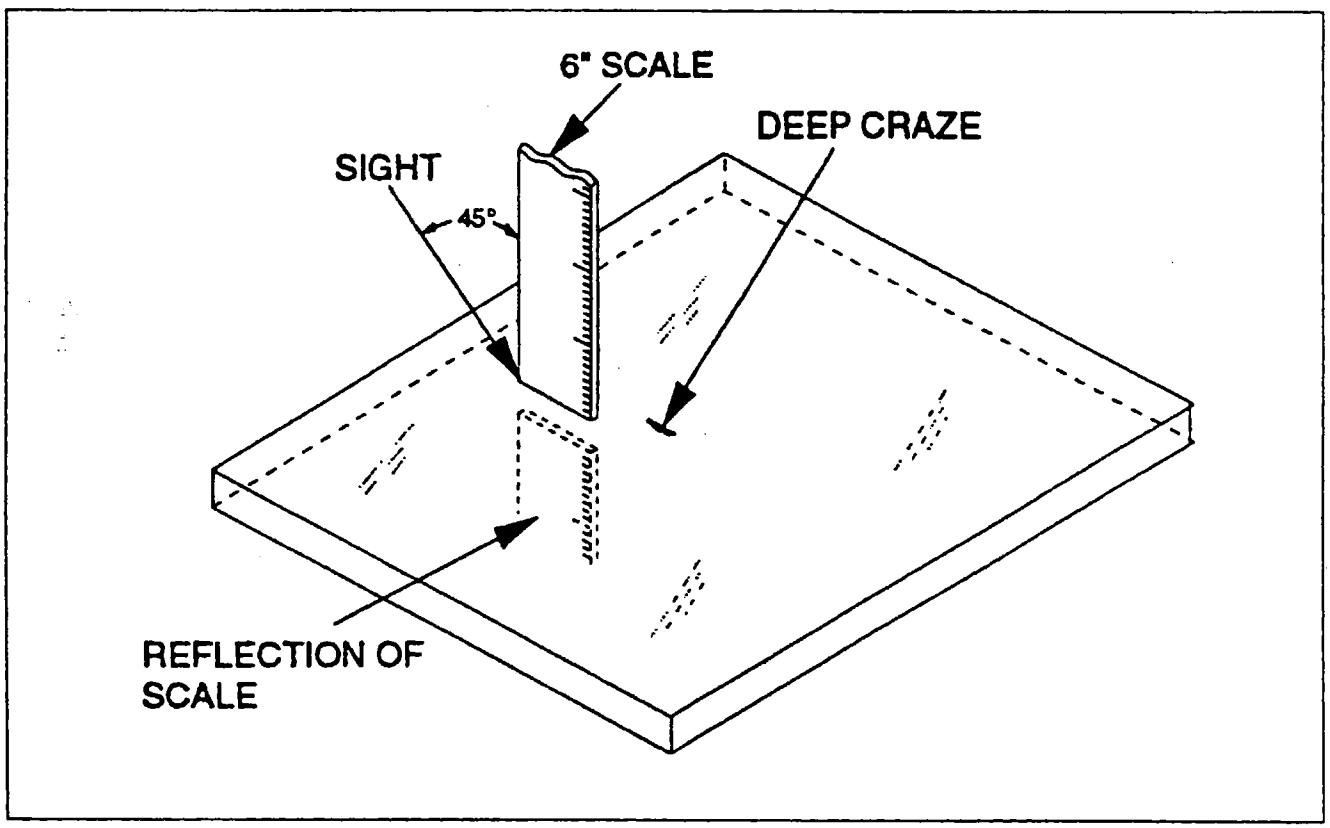

Figure 14-APP-1. Determining Depth of Craze.

(3) Crazing.

(a) Crazing in the windshields is critical.
(b) Determine depth of craze using a calibrated depth gauge or scale (see Figure 14-APP-1).
(c) A craze 0.031 inch (0.787 mm) deep is cause for replacement at the earliest opportunity.
(d) Crazing in any portion of the windshields requires replacement.

(4) Haze or foggy appearance on the glass is not acceptable if the amount of haze/fog causes an obstruction of vision in the area used for operation of the aircraft.

(5) Blemishes.

(a) Blemishes in windshields form in the vinyl plastic interlayer bonding the two glass panes together.

(b) Blemishes in the critical or semi-critical portion of the windshields are not acceptable unless 0.062 inch (1.575 mm) or smaller in circumference, including distorted area.

(c) No more than two blemishes, at least 12 inches (30.48 cm) apart are acceptable in the windshields.

(d) No more than two blemishes within a two inch (5.08 cm) area along the upper portion of the windshields are acceptable.

(6) Scratches.

(a) Light scratches in the lower portion of the window and windshield are acceptable if they do not extend more than 1.00 inch (2.54 cm) from the outside windshield retainer and are less than 1.00 inch (2.54 cm) long.

(b) Scratches in acrylic windows may be reworked if:

1) They are less than 0.030 inch (0.762 mm) deep.

2) 0.310 inch (7.874 mm) panes are a minimum of 0.279 inch (7.087 mm) thick after rework.

3) 0.375 inch (9.575 mm) panes are a minimum of 0.338 inch (8.618 mm) thick after rework.

4) 0.380 inch (9.652 mm) panes are a minimum of 0.342 inch (8.687 mm) thick after rework.

5) No vision distortions in critical and semi-critical areas as a result of rework.

(c) Replace acrylic windows with scratches that cannot be reworked in accordance with these standards.

(7) Delamination.

(a) Cloudy or milky appearance in the delamination indicates moisture or solvent penetraton. Windshields with this condition should be replaced at the earliest opportunity.

(b) Delaminated areas characterized by irregular or jagged boundaries indicate uneven separation of the vinyl and glass. This condition may cause the vinyl to pull chips from the inner glass surface, resulting in failure of the glass ply. Conduct periodic inspections to determine if the damage is progressive or if chipping of the inner glass surface is present.

(c) Replace windshield if any of the following condition are noted:

1) Evidence of chipping of inner glass surface.

2) Area of vision required for safe operation is affected (pilot's discretion).

3) Windshield heat system inoperative.

(8) Cracks. Inspect for cracks as directed in paragraph 1e, Crack Inspection - Acrylic Windows.

d. NON-CRITICAL AREA INSPECTION - CABIN WINDOWS. A non-critical area is a portion of a window not used for flight vision.

(1) Mark-Off in moderate amounts is acceptable provided that visibility is not impaired.

(2) Distortion.

(a) Distortion along the sides of the window within 0.5 inches (1.27 cm) or less of the retainer is acceptable.

(b) Distortion along the upper portion of the window is acceptable if distortion does not extend downward more than 2.00 inches (5.08 cm) from the top and does not impair vision.

(c) Distortion of the main body of the side window is acceptable providing the distorted area does not exceed 25 percent of the winddow area.

(3) Crazing.

(a) Crazing in the winddow is critical.

(b) Determine depth of craze using a calibrated depth gauge or scale (see Figure 14-APP-1).

(c) A craze of 0.062 inch (1.575 mm) depth is cause for immediate replacement. A craze 0.031 inch (0.787 mm) deep is cause for replacement at the earliest opportunity.

(d) Crazing in any portion of the winddow requires replacement.

(4) Haze or foggy appearance on the glass is not acceptable if the amount of haze/fog causes an obstruction of vision in the area used for operation of the aircraft.

(5) Cracks. Inspect for cracks as directed in paragraph 1e, Crack Inspection - Acrylic Windows.

e. CRACK INSPECTION - ACRYLIC WINDOWS.

(1) Perform this inspection annually or each 1,000 hours, whichever occurs first.

— Note —

This inspection should also be performed after repainting when any chemical stripping agent was used. Use the prism method described in step (3) to inspect the entire circumference of the window for stripper damage/etching; especially in areas concealed by window frames, retainers, plates, or collars.

(2) Inspect window panes as follows:

(a) Inspect sealant for signs of wear, deterioration, and positive contact with mounting surfaces.

(b) Inspect window frames, retainers, plates, and collars for cracks, loose rivets or screws, corrosion, and structural defects.

(3) Inspect emergency exit and eyebrow window bolt holes as follows, using Window Inspection Kit - P/N 766-294. (A 45° acrylic prism and glycerin may be used if kit not available.)

(a) Clean area to be inspected with soap and water to ensure surface is free of oil, dirt, and wax.

(b) Determine which immersion oil to use: Type A in cold weather; Type B in hot weather.

(c) Apply a small amount of oil to the surface of window adjacent to bolt hole. On initial application, use a small amount of oil applied directly to one 90° face of inspection prism in contact with glass or acrylic (see Figure 14-APP-2).

(d) Press oiled face of prism to glass or acrylic. Slide prism around until a constant film of oil extends across prism face and window surface.

(e) Look into 90° face of prism (see Figure 14-APP-2). The image of an unfractured fastener hole will appear as a frosty cylinder.

(f) If hole is countersunk, cylinder will appear to have a cone setting on one end as seen in Figure 14-APP-2.

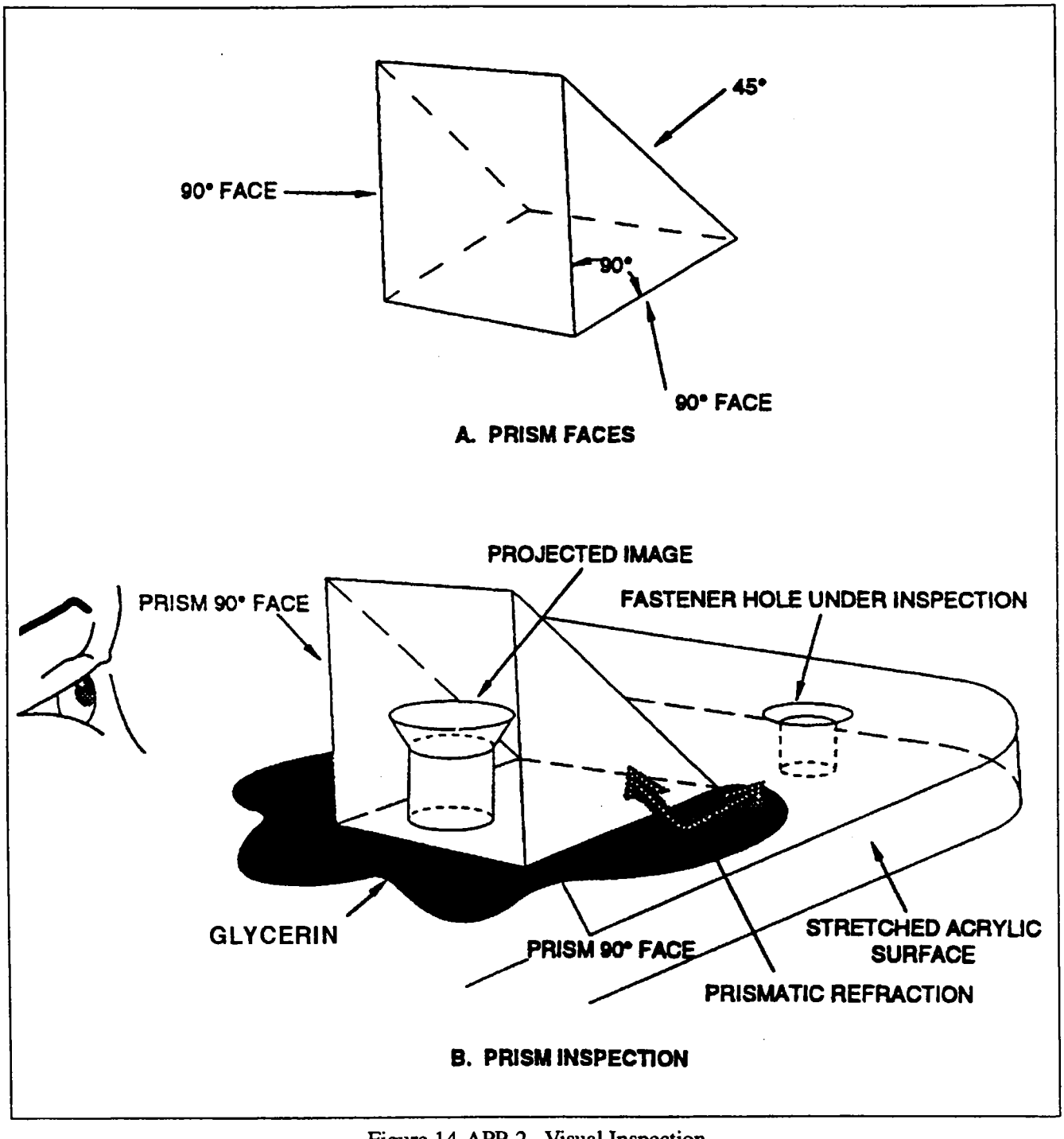

Figure 14-APP-2. Visual Inspection

(g) The image of a cracked hole will appear as a frosty or reflective projection extending from the hole (see detail A-A, Figure 14-APP-3).

(h) The image of a crack from one hole to another will appear as a frosty or reflective irregular surface (see detail B-B, Figure 14-APP-3).

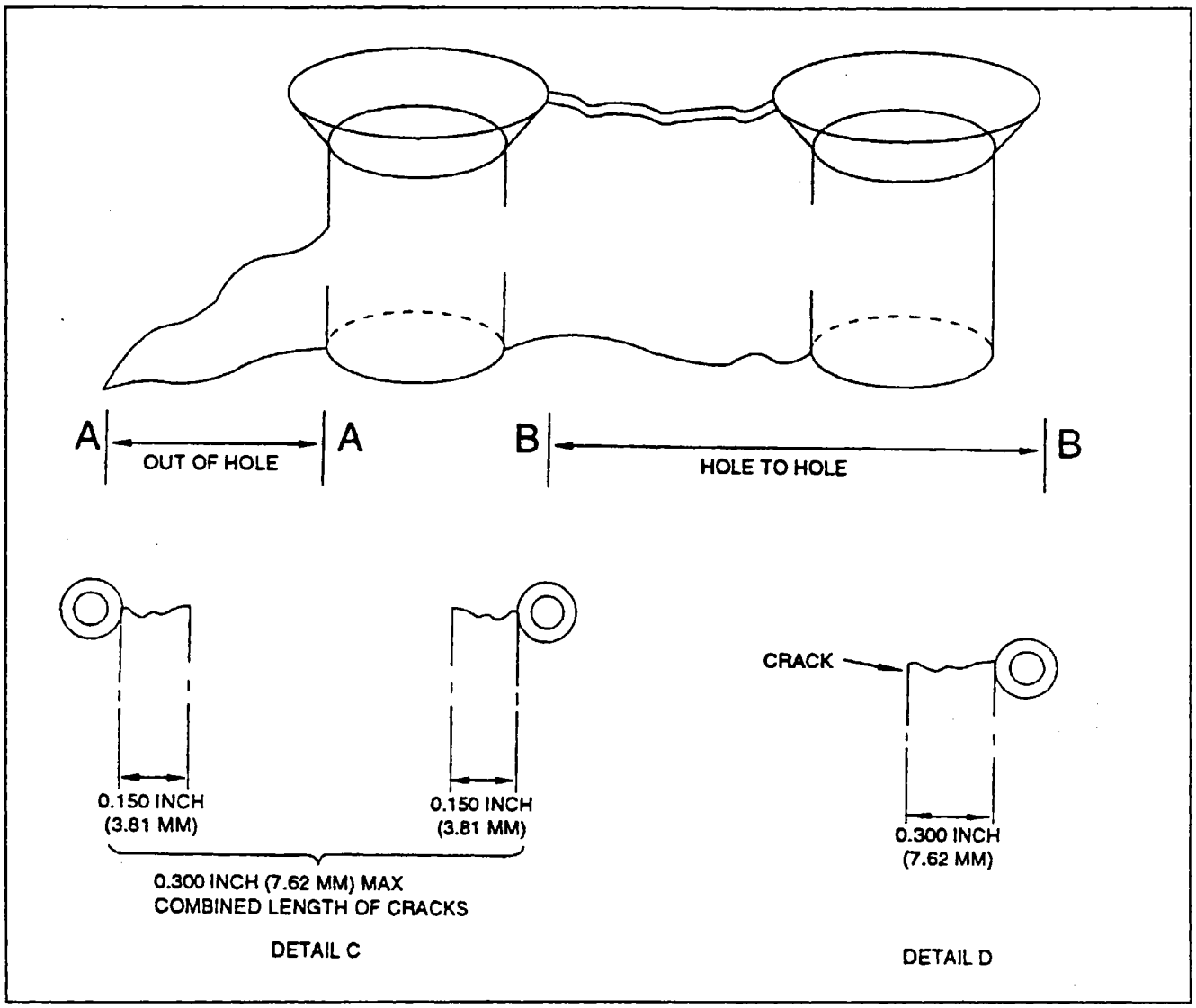

Figure 14-APP-3. Crack Limitations.

(4) Crack Limitation.

(a) The maximum acceptable length of a crack from any single screw hole is 0.300 inch (7.62mm).

(b) The maximum combined length of multiple cracks into the space between two adjacent bolt holes is 0.300 inch (7.62mm) (see Figure 14-APP-3).

(c) If a crack less than 0.300 inch (7.62mm) is left unrepaired, reinspect the window each additional 25 hours of aircraft operation.

(d) A maximum of three bolt holes with cracks less that 0.299 inch (7.59mm) long are acceptable in any one window pane before that window pane must be replaced.

(e) Replace window pane if a single crack or combination of adjacent facing cracks exceed 0.300 inch (7.62mm) in length.

(5) Chips, Scratches, and Crazing Limitations.

(a) Scratches in acrylic windows may be reworked if:

1) They are less than 0.030 inch (0.762 mm) deep.
2) 0.310 inch (7.874 mm) panes are a minimum of 0.279 inch (7.087 mm) thick after rework.
3) 0.375 inch (9.575 mm) panes are a minimum of 0.338 inch (8.618 mm) thick after rework.
4) 0.380 inch (9.652 mm) panes are a minimum of 0.342 inch (8.687 mm) thick after rework.
5) No vision distortions in critical and semi-critical areas as a result of rework.

(b) Replace acrylic windows with scratches that cannot be reworked in accordance with these standards.

2. **Window Repair / Rework Procedure (Side Acrylic Windows Only).** The following methods should be used for repairs:

a. AREAS WITH SMALL SCRATCHES:

(1) Clean the window, using generous amounts of water and a mild detergent.

(2) Polish the window with an approved compound and soft cloth.

(3) Clean and wax the polished area.

b. AREAS WITH LARGE SCRATCHES, GOUGES AND NICKS: Areas with damages exceeding .003 of an inch depth or those with less than .003 of an inch in depth, having sharp edges which cause hanging of fingernail should be locally rounded out or buffed.

(1) Clean the window using generous amounts of water and a mild detergent.

(2) Use a scratch removal kit, such as the type supplied by Micro-Surface Finishing Products Inc., P.O. Box 456, Wilton, Iowa, to remove the defective area, blend and buff.

(3) Using 400A wet or dry abrasive paper wrapped around a smooth rubber block and generous amounts of water, lightly sand over and around the defected area in a circular motion, extending in a diameter equal to two or three times the defected area.

(4) Continue sanding until the initial defect is no longer apparent. Thoroughly flush the area with water.

(5) Using 600A wet or dry abrasive paper, repeat step (3). Continue sanding only until the hairline scratches caused by the coarse sanding are no longer apparent. Sand a larger area than that covered by the original sanding operation. Thoroughly wash the area.

(6) Finish the repair using instructions given in Method a.

CAUTION

Any acrylic window which may have been damaged by paint thinner, paint remover or other softening agent must be replaced. NO repair is permitted for this type of damage.

PAGES 6H9 THRU 6L24 INTENTIONALLY BLANK

Cheyenne

AIRPLANE

SERVICE MANUAL

CARD 7 OF 8

PA-31T CHEYENNE

PA-31T CHEYENNE II

PA-31T1 CHEYENNE I

PA-31T1 CHEYENNE IA

PA-31T2 CHEYENNE II XL

PIPER AIRCRAFT CORPORATION

PART NUMBER 753 826

7A1

JULY 2, 1984
INTERIM REVISION: OCTOBER 15, 1997

SERIAL NUMBER INFORMATION

PA-31T, CHEYENNE

Serial Numbers 31T-7400002 to 31T-7720069 inclusive.

PA-31T, CHEYENNE II

Serial Numbers 31T-7820001 to 31T-8120104 inclusive.

PA-31T1, CHEYENNE I

Serial Numbers 31T-7804001 to 31T-8104101 inclusive.

PA-31T1, CHEYENNE IA

Serial Numbers 31T-8304001 to 31T-8304003 inclusive;
(then, serial number series changed to)
Serial Numbers 31T-1104004 to 1104017 inclusive.

PA-31T2, CHEYENNE II XL

Serial Numbers 31T-8166001 to 31T-8166076 inclusive;
(then, serial number series changed to)
Serial Numbers 31T-1166001 to 1166008 inclusive.

AEROFICHE EXPLANATION AND REVISION STATUS

Service manual information incorporated in this set of Aerofiche cards has been arranged in accordance with general specifications of Aerofiche adopted by General Aviation Manufacturer's Association, (GAMA).

Information compiled in this Aerofiche Service Manual will be kept current by revisions distributed periodically. These revisions supersede all previous revisions and are complete Aerofiche card replacements and supersede Aerofiche cards of same number in set.

Conversion of Aerofiche alpha/numeric code numbers:
First number is Aerofiche card number.
Letter is horizontal line reference per card.
Second number is vertical line reference per card.
Example: 2J16 Aerofiche card number two of given set, Grid location J16.

To aid in locating the various chapters and related service information desired, the following is provided:

1. At the beginning of Aerofiche Card No. 1:
   a. A complete Section Index for all fiche in this set.
   b. A complete list of Illustrations for all fiche in this set.
   c. A complete list of Tables for all fiche in this set.
   d. A complete list of Charts for all fiche in this set.
2. At the beginning of each subsequent Aerofiche Card:
   a. A complete Section Index for all fiche in this set.
   b. A complete list of Illustrations for that fiche only.
   c. A complete list of Tables for that fiche only.
   d. A complete list of Charts for that fiche only.
3. A complete Table of Contents showing paragraph titles and appropriate grid location numbers is given at the beginning of each Section relating to the information within that Section.
4. Identification of revised material:
   Revised text and illustrations are indicated by a black vertical line along the left-hand margin of the frame, opposite revised, added or deleted material. Revision lines indicate only current revisions with changes and additions to or deletions of existing text and illustrations. Changes in capitalization, spelling, punctuation, indexing, physical location of material, or complete page additions are not identified by revision lines.

AEROFICHE EXPLANATION AND REVISION STATUS (cont)

5. Revisions to Service Manual 753 826 issued December 1973 are as follows:

Revision	Publication Date	Aerofiche Card Effectivity
ORG731208	December 8, 1973	
CR810206	February 6, 1981	1, 2, 3, 4, 5, 6, 7 and 8
PR810923	September 23, 1981	1, 2, 3, 4, 5, 6, 7 and 8
PR810925	September 25, 1981	1 Only
PR820215	February 15, 1982	1, 2, 3, 4, 5, 6, 7 and 8
PR821015	October 15, 1982	1, 2, 3, 4, 5, 6, 7 and 8
PR830425	April 25, 1983	1, 2, 3, 4, 5, 6, 7 and 8
PR840105	January 5, 1984	1, 2, 3, 4, 5, 6, 7 and 8
PR840323	March 23, 1984	1, 2, 3, 4, 5, 6, 7 and 8
PR840702	July 2, 1984	1, 2, 3, 4, 5, 6, 7 and 8
IR860220	February 20, 1986	3
IR860430	April 30, 1986	3
IR860821	August 21, 1986	1
IR871009	June 15, 1988	2
IR900313	March 13, 1990	1
IR941019	October 19, 1994	1 and 2
IR950320	March 20, 1995	1
IR971015 *	October 15, 1997	1, 2, 3, 4, 5, 6, 7 and 8

*** INTERIM REVISION TO SERVICE MANUAL 753-826**

Revisions appear in all eight Aerofiche cards. Discard your entire existing Aerofiche card set (Cards 1 - 8) and replace it with the revised Aerofiche card set (Cards 1 - 8) dated 10/15/97.

Consult the Customer Service Information Catalog Aerofiche (P/N 1753-755) for current revision dates for this manual.

SECTION INDEX

SECTION	AEROFICHE CARD NO. 1	GRID NO.
I	INTRODUCTION	1A19
II	HANDLING AND SERVICING	1A22
III	INSPECTION	1D23
IV	STRUCTURES	1E13
V	SURFACE CONTROLS	1I8
	AEROFICHE CARD NO. 2	
VI	HYDRAULIC SYSTEM	2A10
VII	LANDING GEAR AND BRAKE SYSTEM	2D19
VIII	POWER PLANT (PA-31T AND PA-31T1)	2I11
	AEROFICHE CARD NO. 3	
VIIIA	POWER PLANT (PA-31T2)	3A8
IX	FUEL SYSTEM	3D7
X	INSTRUMENTS	3F2
	AEROFICHE CARD NO. 4	
XI	ELECTRICAL SYSTEM	4A7
	AEROFICHE CARD NO. 5	
XII	ELECTRONICS	5A9
XIII	ENVIRONMENTAL CONTROL SYSTEM (PA-31T AND PA-31T1)	5B1
	AEROFICHE CARD NO. 6	
XIIIA	ENVIRONMENTAL CONTROL SYSTEM (PA-31T2)	6A8
XIV	ACCESSORIES AND UTILITIES	6C1
	AEROFICHE CARD NO. 7	
XV	ELECTRICAL SCHEMATICS (PA-31T AND PA-31T1)	7A5
	AEROFICHE CARD NO. 8	
XVA	ELECTRICAL SCHEMATICS (PA-31T2)	8A5

ELECTRICAL SCHEMATIC INDEX

PA-31T AND PA-31T1

FIGURE NO.	SCHEMATIC		GRID NO.
	ANNUNCIATOR SYSTEMS		
	Annunciator Panels		
15-71	PA-31T:	S/N's: 31T-7400002 to 7720007	7D1
15-72		S/N's: 31T-7720008 to 7720069	7D2
15-73		S/N's: 31T-7820001 to 8020092	7D3
15-107		S/N's: 31T-8120001 and up	7F9
15-73	PA-31T1·	S/N's: 31T-7804001 to 8004057	7D3
15-107		S/N's: 31T-8104001 to 8104067 and 8104069	7F9
15-107a		S/N's: 31T-8104068, 8104070 and up	7F11
	COMFORT SYSTEMS		
	Cigar Lighter		
15-12	PA-31T:	S/N's: 31T-7400002 to 7620010	7A21
	Razor Outlet		
15-58	PA-31T:	S/N's: 31T-7400002 to 7520008	7C12
15-59	PA-31T:	S/N's: 31T-7520009 to 7720007	7C13
	Cigar Lighter, Heated Thermos, Razor		
15-13	PA-31T.	S/N's: 31T-7620011 to 7720007	7A21
15-14		S/N's: 31T-7720008 to 7720069	7A22
15-15		S/N's: 31T-7820001 to 8020092	7A22
15-15	PA-31T1:	S/N's: 31T-7804001 to 8004057	7A22
	Cigar Lighter Only		
15-16	PA-31T:	S/N's· 31T-8120001 and up	7A24
15-16	PA-31T1:	S/N's: 31T-8104001 and up	7A24
	Flush Toilet, Thermos, Razor/Inverter		
15-17	PA-31T:	S/N's: 31T-8120001 and up	7A24
15-17	PA-31T1:	S/N's: 31T-8104001 and up	7A24
	DEICE SYSTEMS		
	Air Intake, Ice Deflector, Propeller (Left)		
15-114	PA-31T:	S/N's: 31T-740002 to 7720007	7F17
15-115		S/N's: 31T-7720008 to 7720069	7F19
15-116		S/N's: 31T-7820001 to 8020092	7F21
15-117		S/N's: 31T-8120001 and up	7F23
15-116	PA-31T1.	S/N's: 31T-7804001 to 8004057	7F21
15-117		S/N's: 31T-8104001 and up	7F23
15-117a		S/N's: 31T-8304001 to 8304003 and 31T-1104004 and up	7G1
	Air Intake, Ice Deflector, Propeller (Right)		
15-118	PA-31T:	S/N's: 31T-7400002 to 7720007	7G5
15-119		S/N's: 31T-7720008 to 7720069	7G7
15-120		S/N's: 31T-7820001 to 8020092	7G9
15-121		S/N's: 31T-8120001 and up	7G11

ELECTRICAL SCHEMATIC INDEX (cont.)

PA-31T AND PA-31T1 (cont.)

FIGURE NO.	SCHEMATIC		GRID NO.
	DEICE SYSTEMS (CONT.)		
15-120	PA-31T1:	S/N's: 31T-7804001 to 8004057	7G9
15-121		S/N's: 31T-8104001 and up	7G11
15-121a		S/N's: 31T-8304001 to 8304003 and 31T-1104004 and up	7G13
	Fuel Heat Continuous (Left)		
15-88	PA-31T:	S/N's: 31T-7400002 to 7720007	7D19
15-89		S/N's: 31T-7720008 to 7720069	7D21
15-90		S/N's: 31T-7820001 to 8020092	7D23
15-91		S/N's: 31T-8104001 and up	7E1
15-90	PA-31T1:	S/N's: 31T-7804001 to 8004057	7D23
15-91		S/N's: 31T-8104001 and up	7E1
	Fuel Heat Continuous (Right)		
15-84	PA-31T:	S/N's: 31T-7400002 to 7720007	7D14
15-85		S/N's: 31T-7720008 to 7720069	7D15
15-86		S/N's: 31T-7820001 to 8020092	7D16
15-87		S/N's: 31T-8120001 and up	7D17
15-86	PA-31T1:	S/N's: 31T-7804001 to 8004057	7D16
15-87		S/N's: 31T-8104001 and up	7D17
	Pitot Heat (Left and Right)		
15-30	PA-31T:	S/N's: 31T-7400002 to 7720007	7B10
15-31		S/N's: 31T-7720008 to 8020092	7B10
15-32		S/N's: 31T-8120001 and up	7B11
15-31	PA-31T1:	S/N's: 31T-7804001 to 8004057	7B10
15-32a		S/N's: 31T-8104Q01 and up	7B11
	Heated Stall Warning Vane (Optional)		
15-110	PA-31T:	S/N's: 31T-8104001 to 8104067 and 8104069	7F14
15-110a	PA-31T1:	S/N's: 31T-8104068, 8104070 and up	7F14
	Surface Deice		
15-77	PA-31T:	S/N's: 31T-7400002 to 7720007	7D7
15-78		S/N's: 31T-7720008 to 8020092	7D8
15-79		S/N's: 31T-8120001 and up	7D9
15-78	PA-31T1:	S/N's: 31T-7804001 to 8004057	7D8
15-79		S/N's: 31T-8104001 and up	7D9
	Windshield Heat (Left and Right)		
15-80	PA-3 IT:	S/N's: 3 IT-7400002 to 7720007	7D10
15-81		S/N's: 31T-7720008 to 7920094	7D11
15-82		S/N's: 31T-8020001 to 8020092	7D12
15-83		S/N's: 31 T-8120001 and up	7D13
15-81	PA-31T1:	S/N's: 31T-7804001 to 7904057	7D11
15-82		S/N's: 31T-8004001 to 8004057	7D12
15-83		S/N's. 31T-8104001 and up	7D13

ELECTRICAL SCHEMATIC INDEX (cont.)

PA-31T and PA-31T1 (cont.)

FIGURE NO	SCHEMATIC		GRID NO.
	ELECTRICAL SYSTEMS		
	Bus Power Distribution		
15-1	PA-31T:	S/N's: 31T-8120001 and up	7A16
15-1	PA-31T1:	S/N's: 31T-8104001 and up	7A16
	Starter/Generator (Left)		
15-92	PA-31T:	S/N's: 31T-7400002 to 7720007	7E3
15-93		S/N's: 31T-7720008 to 7720069	7E5
15-94		S/N's: 31T-7820001 to 7920094	7E7
15-95		S/N's: 31T-8020001 to 8020092	7E9
15-96		S/N's: 31T-8120001 and up	7E11
15-94	PA-31T1:	S/N's: 31T-7804001 to 7904057	7E7
15-95		S/N's: 31T-8004001 to 8004057	7E9
15-96		S/N's: 31T-8104001 and up	7E11
	Starter/Generator (Right)		
15-98	PA-31T:	S/N's: 31T-7400002 to 7720007	7E15
15-99		S/N's: 31T-7720008 to 7720069	7E17
15-100		S/N's: 31T-7820001 to 7920094	7E19
15-101		S/N's: 31T-8020001 to 8020092	7E21
15-102		S/N's: 31T-8120001 and up	7E23
15-100	PA-31T1.	S/N's: 31T-7804001 to 7904057	7E19
15-101		S/N's: 31T-8004001 to 8004057	7E21
15-102		S/N's: 31T-8104001 and up	7E23
15-52	Ground Clearance		7C5
15-111	Avionics Emergency Switch Circuit		7F15
	ENGINE SYSTEMS		
	Fire Extinguishers		
15-33	PA-31T:	S/N's: 31T-7400042 to 7720007	7B12
15-34		S/N's: 31T-7720008 to 7720069	7B13
15-35		S/N's: 31T-7820001 to 8020092	7B14
15-36		S/N's: 31T-8120001 and up	7B15
15-35	PA-31T1:	S/N's: 31T-7804001 to 8004057	7B14
15-36		S/N's: 31T-8104001 and up	7B15
	Ignition (Left and Right)		
15-37	PA-31T:	S/N's: 31T-7400002 to 7720007	7B16
15-38		S/N's: 31T-7720008 to 8020092	7B17
15-39		S/N's: 31T-8120001 and up	7B18
15-38	PA-31T1:	S/N's: 31T-7804001 to 8004057	7B17
15-39		S/N's: 31T-8104001 and up	7B18

ELECTRICAL SCHEMATIC INDEX (cont.)

PA-31T AND PA-31T1 (cont.)

FIGURE NO.	SCHEMATIC		GRID NO.
	ENGINE SYSTEMS (CONT.)		
	Ignition- Auto Left and Right (Optional)		
15-40	PA-31T:	S/N's: 31T-8120001 and up	7B19
15-40	PA-31T1:	S/N's: 31T-8104001 and up	7B19
	Oil Cooler Doors - Left and Right		
15-64	PA-31T:	S/N's: 31T-7400002 to 7720007	7C18
15-65		S/N's: 31T-7720008 to 7720069	7C19
15-66		S/N's: 31T-7820001 to 8020092	7C20
15-67		S/N's: 31T-8120001 and up	7C21
15-66	PA-31T1:	S/N's: 31T-7804001 to 8004057	7C20
15-67		S/N's: 31T-8104001 to 8304003 and 31T-1104004 to 1104007	7C21
15-143		S/N's: 31T-1104008 and up	7I9
	ENVIRONMENTAL SYSTEMS		
15- 141	Auxiliary Heat (Optional)		7I7
	Cabin Temperature Controller		
15-129	PA-31T:	S/N's: 31T-7400002 to 7720007	7H5
15- 130		S/N's: 31T-7720008 to 7720069	7H7
15-131		S/N's: 31T-7820001 to 790005	7H9
15-132		S/N's: 31T-7920006 to 7920094	7H11
15-133		S/N's: 31T-8020001 to 8020092	7H13
15-134		S/N's: 31T-8120001 to 8120060	7H15
15-134a		S/N's. 31T-8120061 and up	7H17
15-131	PA-31T1:	S/N's: 31T-78040001 to 7804011	7H9
15-132		S/N's: 31T-7904001 to 7904057	7H11
15-133		S/N's: 31T-8004001 to 8004057	7H13
15-134		S/N's: 31T-8104001 to 8104062	7H15
15-134a		S/N's: 31T-8104063 and up	7H17
	Cabin Pressure Controller		
15-18	PA-31T:	S/N's: 31T-7400002 to 7720007	7B1
15-19		S/N's: 31T-7720008 to 7720069	7B1
15-20		S/N's: 31T-7820001 to 7820092	7B2
15-21		S/N's: 31T-7920001 to 8020069	7B2
15-22		S/N's: 31T-8020070 to 8020092	7B3
15-23		S/N's: 31T-8120001 and up	7B4
15-20	PA-31T1:	S/N's: 31T-7804001 to 7804011	7B2
15-21		S/N's: 31T-7904001 to 8004036	7B2
15-22		S/N's: 31T-8004037 to 8004057	7B3
15-23		S/N's: 31T-8104001 and up	7B4

ELECTRICAL SCHEMATIC INDEX (cont.)

PA-31T AND PA-31T1 (cont.)

FIGURE NO.	SCHEMATIC		GRID NO.
	FLAP SYSTEMS		
	Wing Flaps		
15-58	PA-31T:	S/N's: 31T-7400002 to 7520008	7C12
15-59		S/N's: 31T-7520009 to 7720007	7C13
15-60		S/N's: 31T-7720008 to 7720069	7C14
15-61		S/N's: 31T-7820001 to 7820086	7C15
15-62		S/N's: 31T-7820087 to 8020092	7C16
15-63		S/N's: 31T-8120001 and up	7C17
15-61	PA-31T1:	S/N's: 31T-7804001 to 7804011	7C15
15-62		S/N's: 31T-7904001 to 8004057	7C16
15-63		S/N's: 31T-8104001 and up	7C17
	FUEL SYSTEMS		
	Fuel System (Left)		
15-88	PA-31T:	S/N's: 31T-7400002 to 7720007	7D19
15-89		S/N's: 31T-7720008 to 7720069	7D21
15-90		S/N's: 31T-7820001 to 8020092	7D23
15-91		S/N's: 31T-8120001 and up	7E1
15-90	PA-31T1:	S/N's: 31T-7804001 to 8004057	7D23
15-91		S/N's: 31T-8104001 and up	7E1
	Fuel System (Right)		
15-84	PA-31T:	S/N's: 31T-7400002 to 7720007	7D14
15-85		S/N's: 31T-7720()08 to 7720069	7D15
15-86		S/N's: 31T-7820001 to 8020092	7D16
15-87		S/N's: 31T-8120001 and up	7D17
15-86	PA-31T1:	S/N's: 31T-7804001 to 8004057	7D16
15-87		S/N's: 31T-8104001 and up	7D17
	INDICATORS		
	Attitude Horizon, DG, Turn and Bank (Left/ Right)		
15-41	PA-31T:	S/N's: 31T-7400002 to 7720007	7B20
15-42		S/N's: 31T-7720008 to 8020092	7B21
15-43		S/N's: 31T-8120001 and up	7B22
15-42	PA-31T1	S/N's: 31T-7804001 to 8004057	7B21
15-43		S/N's: 31T-81040001 and up	7B22
	Chimes, Seat Belts, No Smoking		
15-113	PA-31T:	S/N's: 31T-8020067 and up	7F16
15-113	PA-31T1:	S/N's: 31T-8004034 and up	7F16
	Clock Digital		
15-112	PA-31T:	S/N's: 31T-8020001 to 8020055	7F16
15-112	PA-31T1:	S/N's: 31T-8004001 to 8004038	7F16

ELECTRICAL SCHEMATIC INDEX (cont.)

PA-31T AND PA-31T1 (cont.)

FIGURE NO.	SCHEMATIC		GRID NO.
	INDICATORS (cont.)		
	Clock, OAT, Airspeed, Altitude - Digital Display (Cabin)		
15-9	PA-31T:	S/N's: 31T-8120001 and up	7A20
15-9	PA-31T1:	S/N's: 31T-8104001 and up	7A20
	Hourmeter, OAT		
15-6	PA-31T:	S/N's: 31T-7400002 to 7720007	7A19
15-7		S/N's: 31T-7720008 to 8020092	7A19
15-8		S/N's: 31T-8120001 and up	7A20
15-7	PA-31T1:	S/N's: 31T-7804001 to 8004057	7A19
15-8		S/N's: 31T-8104001 and up	7A20
	Oil Temperature (Left/ Right)		
15-24	PA-31T:	S/N's: 31T-7400002 to 7720028	7B5
15-25		S/N's: 31T-7720029 to 7720069	7B6
15-26		S/N's: 31T-7820001 to 8020092	7B7
15-26	PA-31T1:	S/N's: 31T-7804001 to 8004057	7B7
	Oil Temperature/ Oil Pressure (Left/ Right)		
15-27	PA-31T:	S/N's: 31T-8120001 and up	7B8
15-27	PA-31T1:	S/N's: 31T-8104001 and up	7B8
15-2	Reverse NOT READY lights		7A17
	Torque Meters (Left/ Right)		
15-10	PA-31T:	S/N's: 31T-7400002 to 7720007	7A21
15-11		S/N's: 31T-7720008 and up	7A21
15-11	PA-31T1:	S/N's: 31T-7804001 and up	7A21
15-142	Torque Meters (Weston Kulite) (Left/Right)		7I8
	Voltmeter		
15-5	PA-31T:	S/N's: 31T-8120001 and up	7A16
15-5	PA-31T1:	S/N's: 31T-8104001 and up	7A16
	LANDING GEAR SYSTEMS		
	Landing Gear		
15-122	PA-31T.	S/N's: 31T-7400002 to 7720007	7G15
15-123		S/N's: 31T-7720008 to 8020092	7G17
15-124		S/N's: 31T-8120001 and up	7G19
15-123	PA-31T1:	S/N's: 31T-7804001 to 8004057	7G17
15-124		S/N's: 31T-8104001 to 8304003 and 31T-1104004 and up	7G19
	LIGHTING SYSTEMS - EXTERNAL		
	Anti-Collision Beacon		
15-50	PA-31T:	S/N's: 31T-7920021 to 8020092	7C4
15-51		S/N's: 31T-8120001 and up	7C4
15-50	PA-31T1:	S/N's: 31T-7904006 to 8004057	7C4
15-51		S/N's: 31T-8104001 and up	7C4

ELECTRICAL SCHEMATIC INDEX (cont.)

PA-31T and PA-31T1 (cont.)

FIGURE NO.	SCHEMATIC		GRID NO.
	LIGHTING SYSTEMS - EXTERNAL (cont.)		
	Anti-Collision - Strobe		
15-47	PA-31T:	S/N's: 31T-8120001 and up	7C2
15-47	PA-31T1:	S/N's: 31T-8104001 and up	7C2
	Landing, Taxi, Wing Inspection		
15-74	PA-31T:	S/N's: 31T-7400002 to 7720007	7D4
15-75		S/N's: 31T-7720008 to 8020092	7D5
15-76		S/N's: 31T-8120001 and up	7D6
15-75	PA-31T1:	S/N's: 31T-7804001 to 8004057	7D5
15-76		S/N's: 31T-8104001 and up	7D6
	Logo		
15-48	PA-31T:	S/N's: 31T-8020001 to 8020092	7C3
15-51a		S/N's: 31T-8120001 and up	7C5
15-48	PA-31T1:	S/N's: 31T-8004001 to 8004057	7C3
15-51a		S/N's: 31T-8104001 and up	7C5
	Position Strobe		
15-44	PA-31T:	S/N's: 31T-7400002 to 7720007	7B23
15-45		S/N's: 31T-7720008 to 8020092	7B24
15-46		S/N's: 31T-8120001 and up	7C1
15-45	PA-31T1:	S/N's: 31T-7804001 to 8004057	7B24
15-46		S/N's: 31T-8104001 and up	7C1
	Recognition		
15-49	PA-31T:	S/N's: 31T-8020001 to 8020092	7C3
15-51a		S/N's: 31T-8120001 and up	7C5
15-49	PA-31T1:	S/N's: 31T-8004001 to 8004057	7C3
15-51a		S/N's: 31T-8104001 and up	7C5
	LIGHTING SYSTEMS - INTERNAL		
	Baggage, Dome, Map, Ajar, Reading		
15-53	PA-31T:	S/N's: 31T-7400002 to 7520043	7C7
15-54		S/N's: 31T-7620001 to 7720007	7C8
	Baggage, Dome, Ajar, Floor, Exit, Reading		
15-55	PA-31T:	S/N's: 31T-7720008 to 8020092	7C9
15-55	PA-31T1:	S/N's: 31T-7804001 to 8004057	7C9
	Baggage, Ajar, Aisle, Exit, and Time Delay		
15-56	PA-31T:	S/N's: 31T-8120001 and up	7C10
15-56	PA-31T1:	S/N's: 31T-8104001 and up	7C10
	Dome, Map, Cabinet, Overhead, No Smoking, Seat Belts		
15-57	PA-31T:	S/N's: 31T-8120001 and up	7C11
15-57	PA-31T1:	S/N's: 31T-8104001 and up	7C11
	Panel Lighting		
15-135	PA-31T:	S/N's: 31T-7400002 to 7720007	7H19
15-136		S/N's: 31T-7720008 to 7720069	7H21
15-137		S/N's: 31T-7820001 to 7820092	7H23
15-138		S/N's: 31T-7920001 to 7920094	7I1

ELECTRICAL SCHEMATIC INDEX (cont.)

PA-31T and PA-31T1 (cont.)

FIGURE NO.	SCHEMATIC	GRID NO.
	LIGHTING SYSTEMS - INTERNAL (cont.)	
	Panel Lighting (cont.)	
15-139	PA-31T: S/N's: 31T-8020001 to 8020092	7I3
15-140	S/N's: 31T-8120001 and up	7I5
15-137	PA-31T1: S/N's: 31T-7804001 to 7804011	7H23
15-138	S/N's: 31T-7904001 to 7904057	7I1
15-139	S/N's: 31T-8004001 to 8004057	7I3
15-140	S/N's: 31T-8104001 and up	7I5
	PROPELLER SYSTEMS	
	H.T.G. and Low Pitch Beta Lights (Left/Right)	
15-125	PA-31T: S/N's: 31T-7400002 to 7720007	7G21
15-126	S/N's: 31T-7720008 to 7720069	7G23
15-127	S/N's: 31T-7820001 to 8020092	7H1
15-128	S/N's: 31T-8120001 and up	7H3
15-127	PA-31T1: S/N's: 31T-7804001 to 8004057	7H1
15-128	S/N's: 31T-8104001 and up	7H3
15-3	Propeller and Gas Generators (Left/Right) (Earlier Models)	7A17
	Propeller and Gas Generators (Left/Right)	
15-4	PA-31T: S/N's: 31T-8120001 and up	7A18
15-4	PA-31T1: S/N's: 31T-8104001 and up	7A18
	Propeller Synchronization	
15-68	PA-31T: S/N's: 31T-7400002 to 7920035	7C22
15-69	S/N's: 31T-79200036 to 8020092	7C23
15-70	S/N's: 31T-8120001 and up	7C24
15-68	PA-31T1: S/N's: 31T-7804001 to 7904018	7C22
15-69	S/N's: 31T-7904019 to 8004057	7C23
15-70	S/N's: 31T-8104001 and up	7C24
	STABILITY AUGMENTATION SYSTEM	
	SAS	
15-103	PA-31T: S/N's: 31T-7400002 to 7720007	7F1
15-104	S/N's: 31T-7720008 to 7720069	7F3
15-105	S/N's: 31T-7820001 to 8020092	7F5
15-106	S/N's: 31T-8120001 and up	7F7

ELECTRICAL SCHEMATIC INDEX (cont.)

PA-31T AND PA-31T1 (cont.)

FIGURE NO.		SCHEMATIC	GRID NO.
WARNING SYSTEMS ANNUNCIATOR PANEL (SEE ANNUNCIATOR)			
	Stall Warning		
15-108	PA-31T:	S/N's: 31T-7804001 to 7904057	7F13
15-109		(W/ Time Delay) S/ N's: 31T-8004001 to 8004057	7F13
15-110		S/N's: 31T-8104001 to 8104067 and 8104069	7F14
15-110a		S/N's: 31T-8104068, 8104070 and up	7F14
	Windshield Wipers		
15-28	PA-31T:	S/N's: 31T-7400002 to 7720007	7B9
15-29		S/N's: 31T-7720008 and up	7B9
15-29	PA-31T1:	S/N's: 31T-7804001 and up	7B9

LIST OF TABLES

Table		Aerofiche Grid No
XV-I	Electrical Wire Coding	7A13
XV-II	Electrical Symbols	7A14

TABLE XV-I. ELECTRICAL WIRE CODING

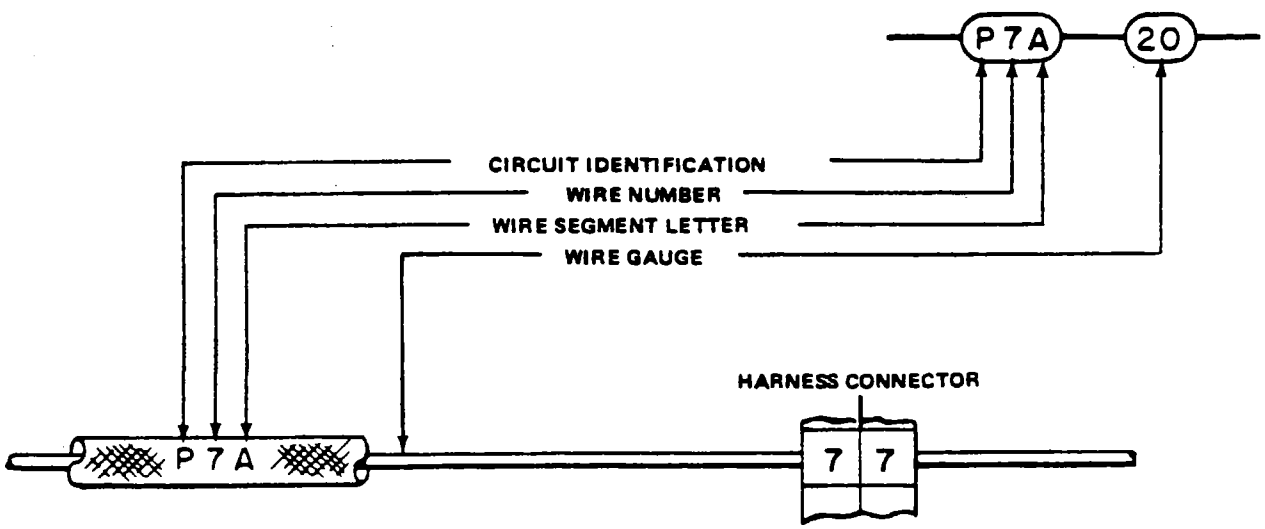

CIRCUIT IDENTIFICATION	CIRCUITS	HARNESS CONNECTOR NUMBERS & LOCATIONS
E	ENGINE INSTRUMENT	E 100 Series = Left Wing and Nacelle.
F	FLIGHT INSTRUMENT	
G	LANDING GEAR	
H	HEATER, VENTILATING	E 200 Series = Right Wing and Nacelle.
J	IGNITION SYSTEM	
L	LIGHTING SYSTEM	
ML	ELECTRICAL GAUGES	
P	PRIMARY POWER	E 300 Series = From Fuselage Station 81.00 Aft.
PD	PROPELLER DEICER	
PF	ALTERNATOR FIELD	
PR	PRESSURIZATION SYSTEM	
Q	FUEL AND OIL	E 400 Series = From Fuselage Station 81.00 Forward.
SD	SURFACE DEICER	
WH	WINDSHIELD HEAT	
WW	WINDSHIELD WIPER	

TABLE XV-II. ELECTRICAL SYMBOLS

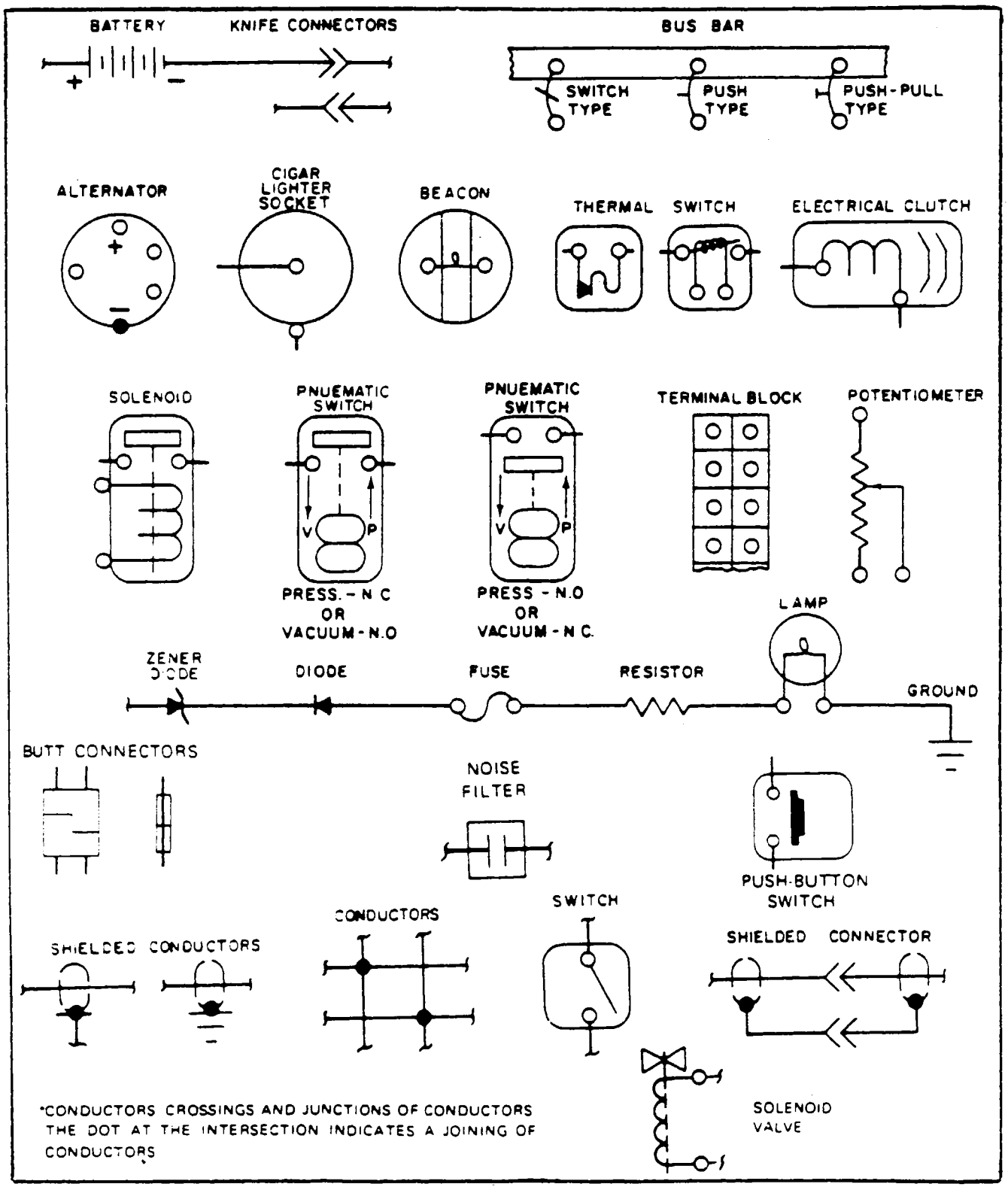

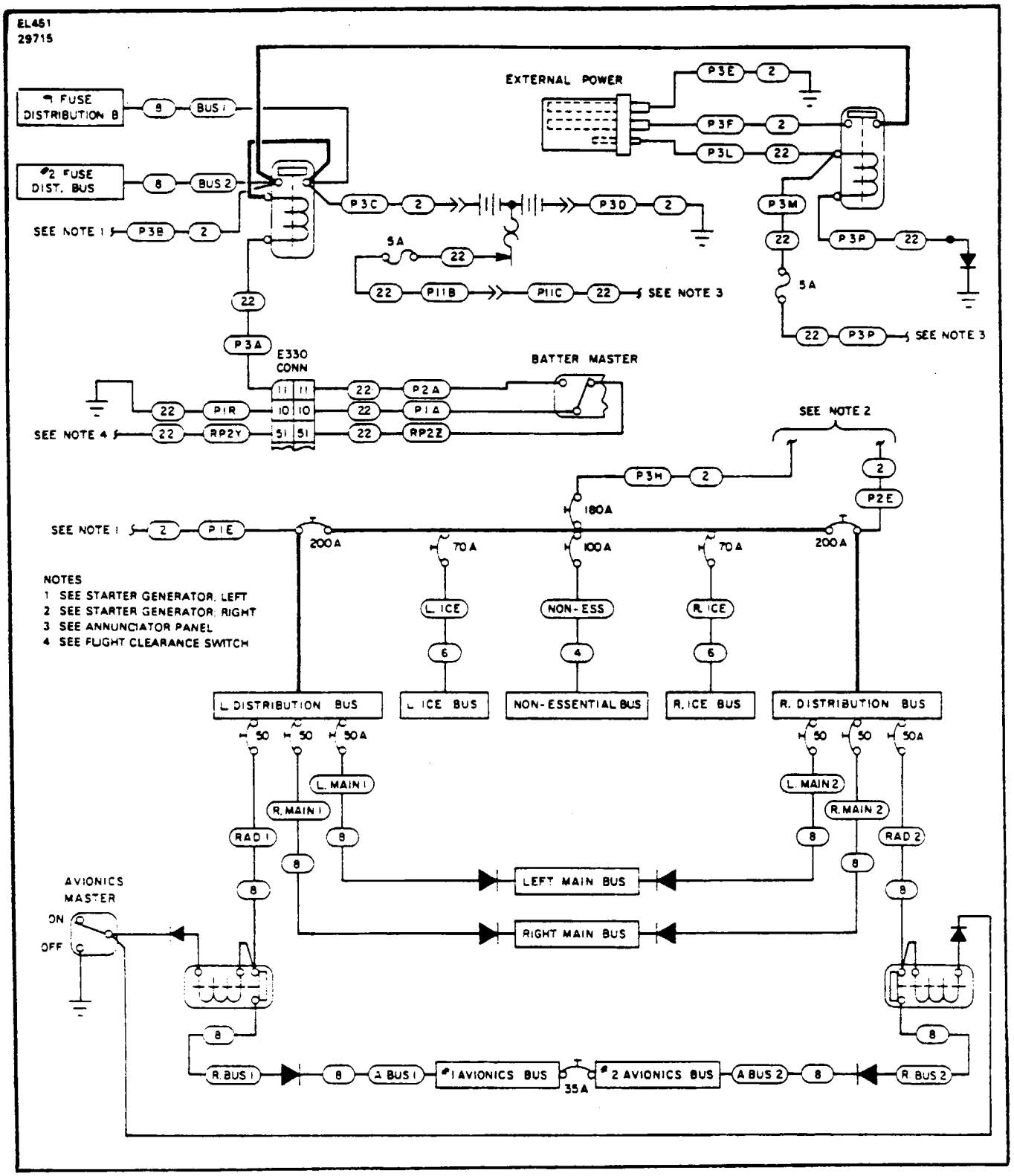

Figure 15-1. Power Distribution System,
PA-31T S/N 31T-8120001 and up and PA-31T1 S/N 31T-8104001 and up

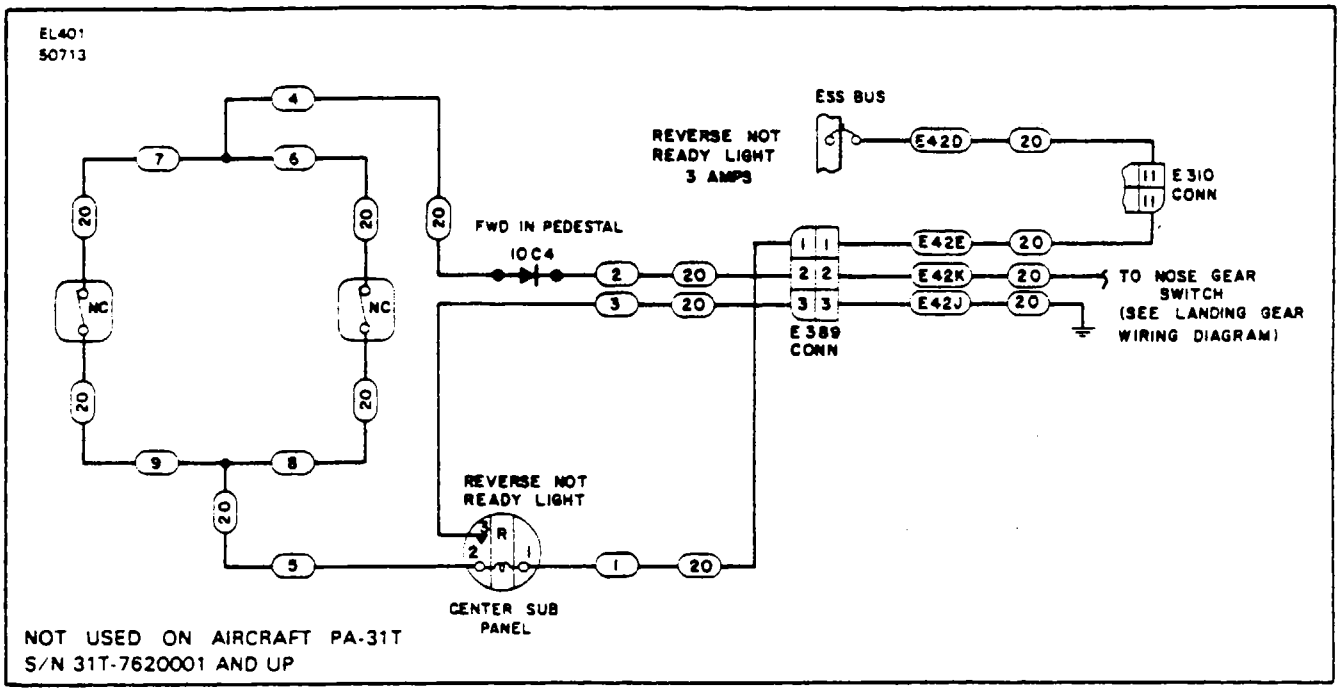

Figure 15-2. Reverse Not Ready Lights

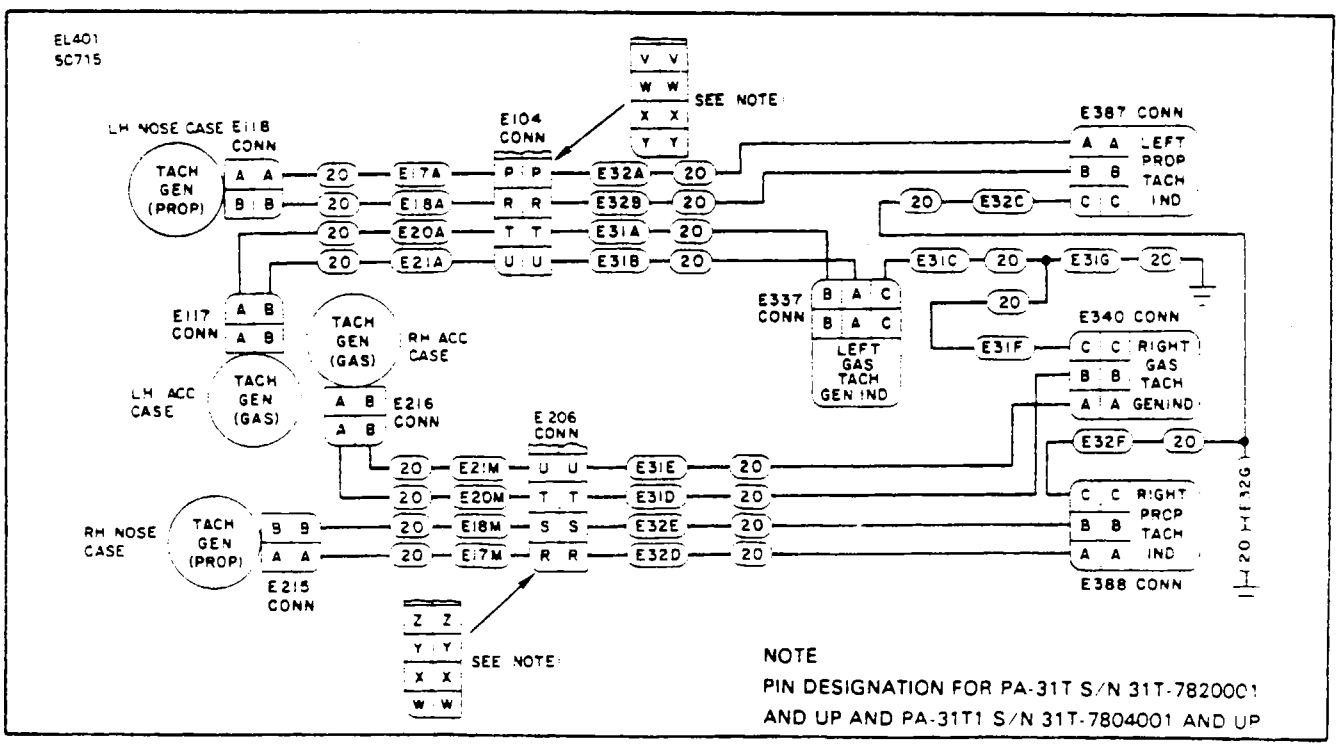

Figure 15-3 Prop and Gas Generator, Right and Left. (Earlier Models)

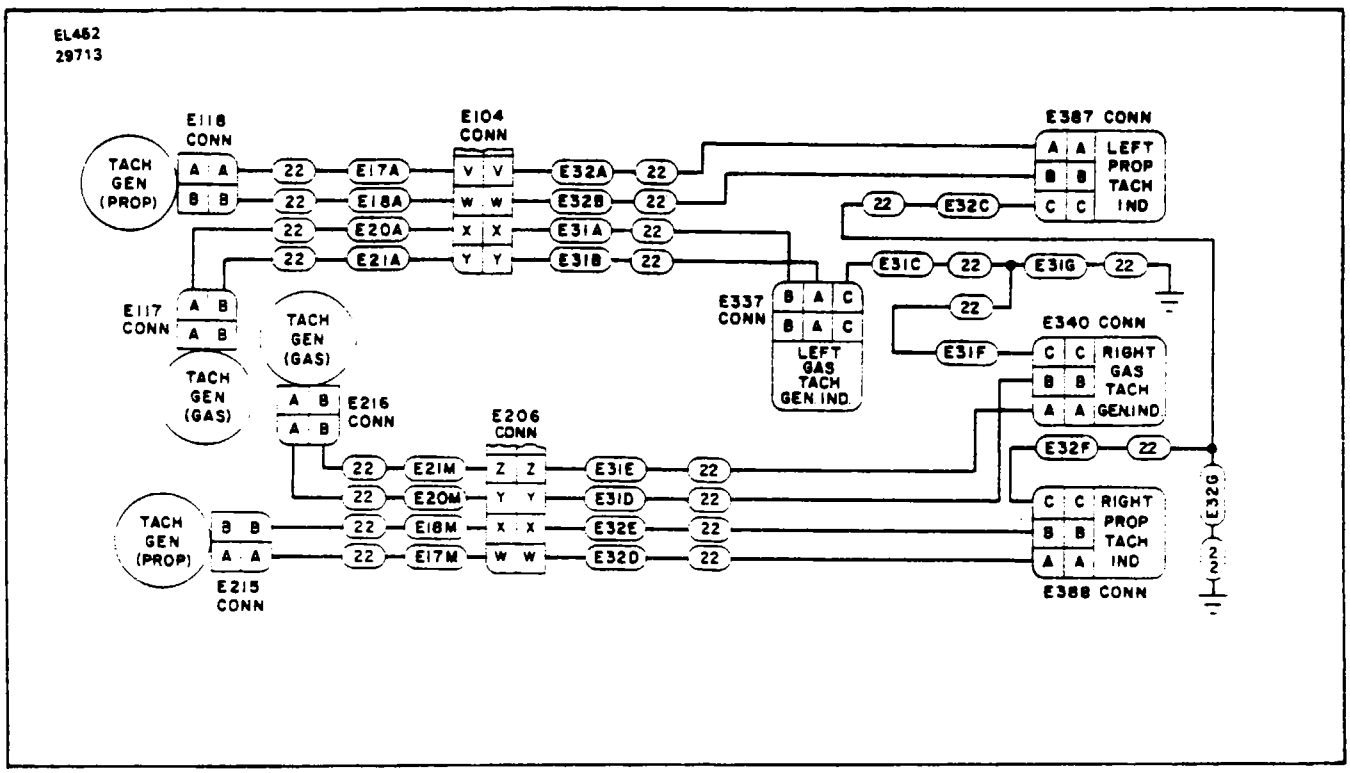

Figure 15-4 Prop and Gas Generator: Right and Left.
PA-31T S/N 31T-8120001 and up and PA-31T1 S/N 31T-8104001 and up

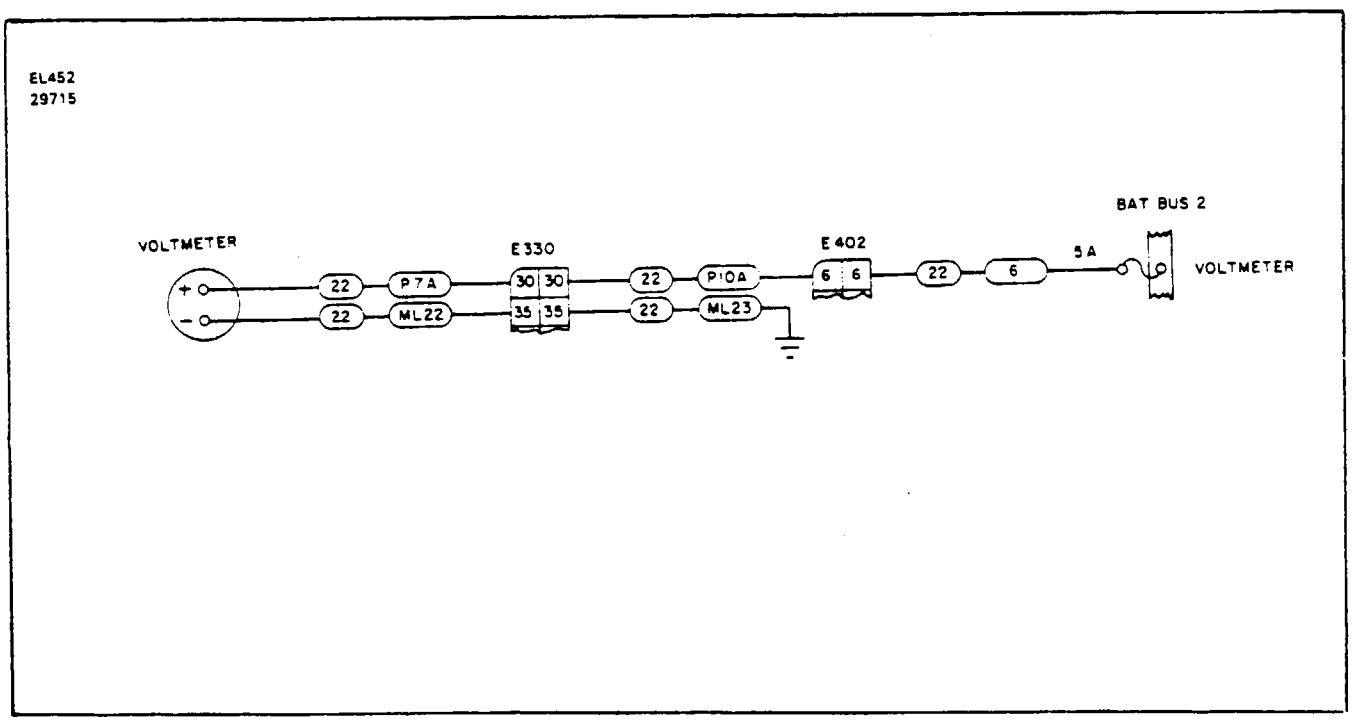

Figure 15-5 Voltmeter.
PA-31T S/N 31T-8120001 and up and PA-31T1 S/N 31T-8104001 and up

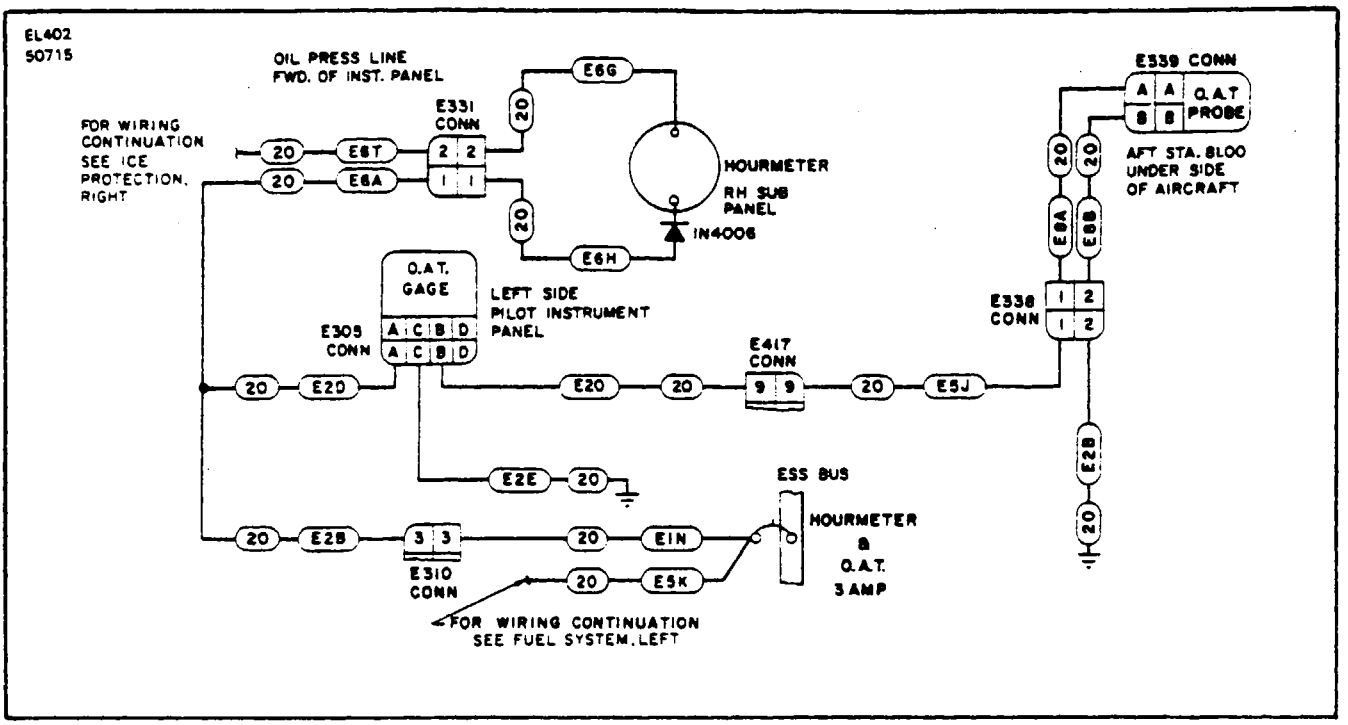

Figure 15-6. Hourmeter and O.A.T.,
PA-31T S/N 31T-7400002 to -7720007

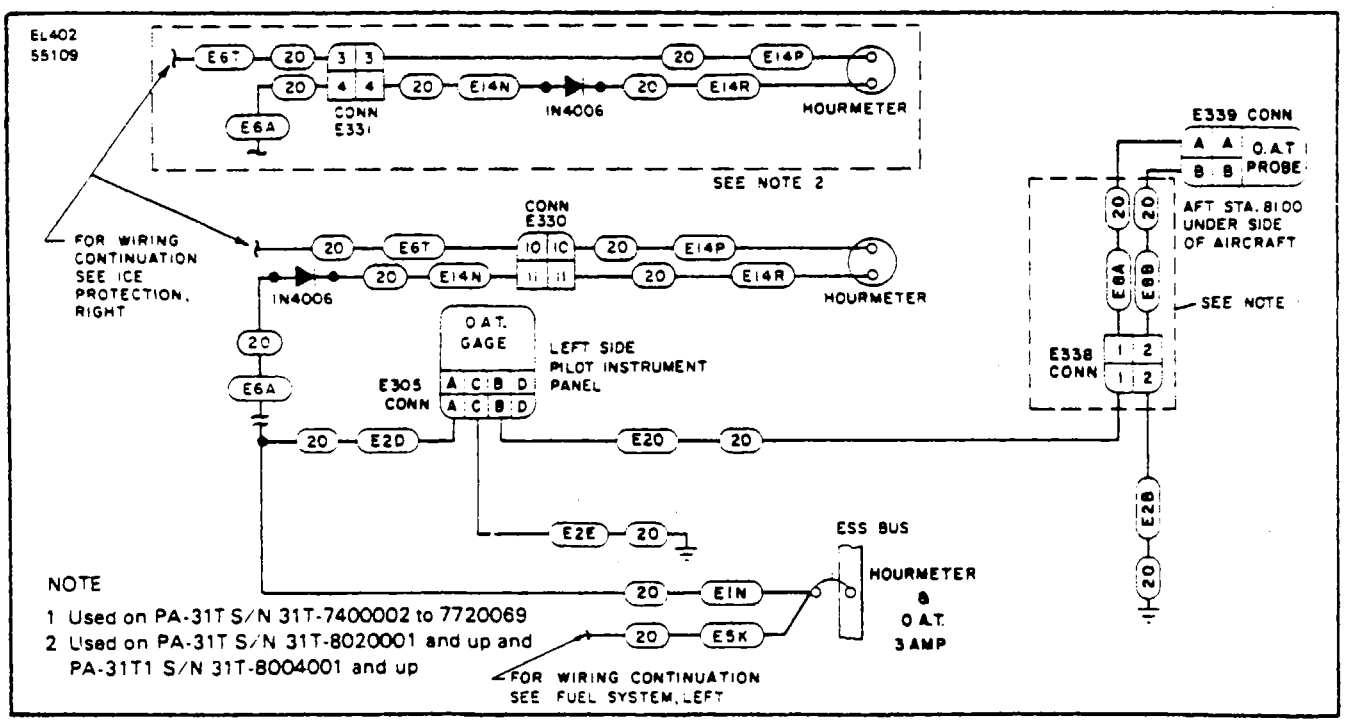

Figure 15-7. Hourmeter and O.A.T.,
PA-31T S/N 31T-7720008 to -8020092 and PA-31T1 S/N 31T-7804001 to -8004057

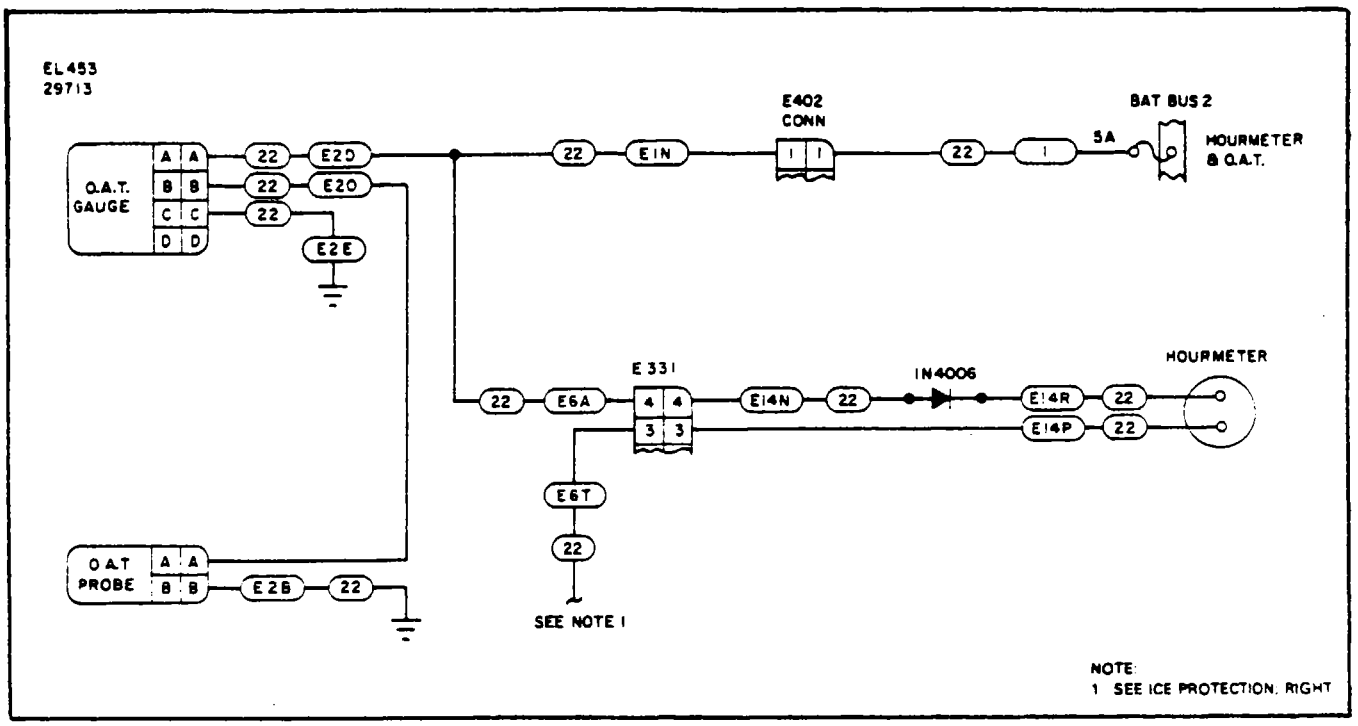

Figure 15-8. Hourmeter and O.A.T.,
PA-31T S/N 31T-8120001 and up and PA-31T1 S/N 31T-8104001 and up

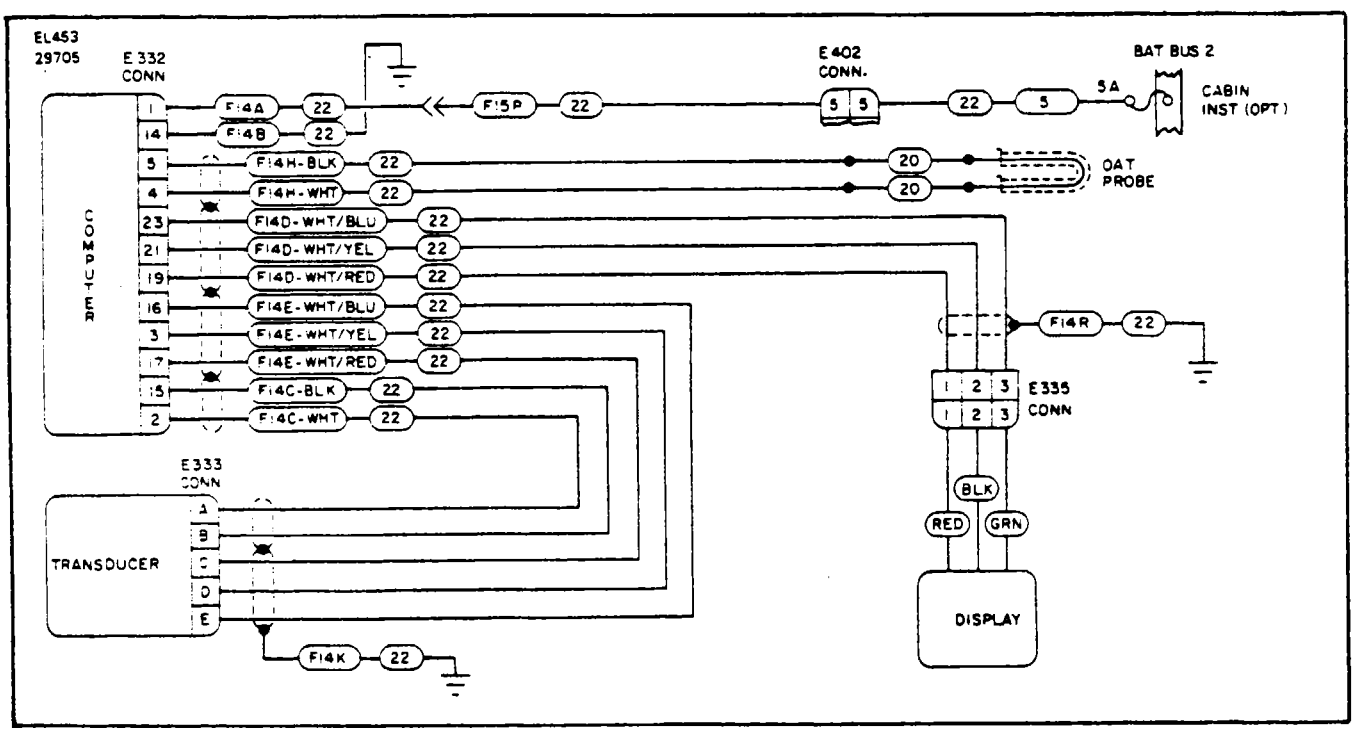

Figure 15-9. Cabin Instruments (Clock, O.A.T., Airspeed and Altitude),
PA-31T S/N 31T-8120001 and up and PA-31T1 S/N 31T-8104001 and up

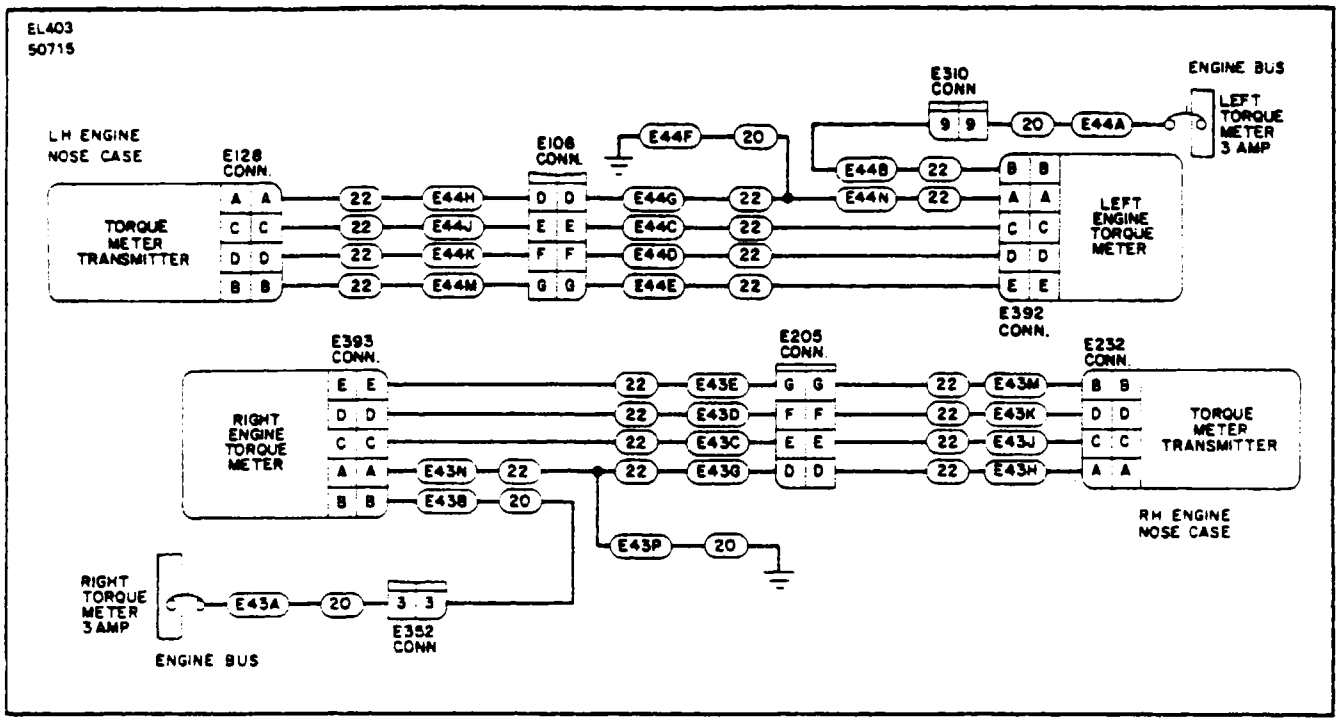

Figure 15-10. Torque Meters; Right and Left,
PA-31T S/N 31T-7400002 to -7720007

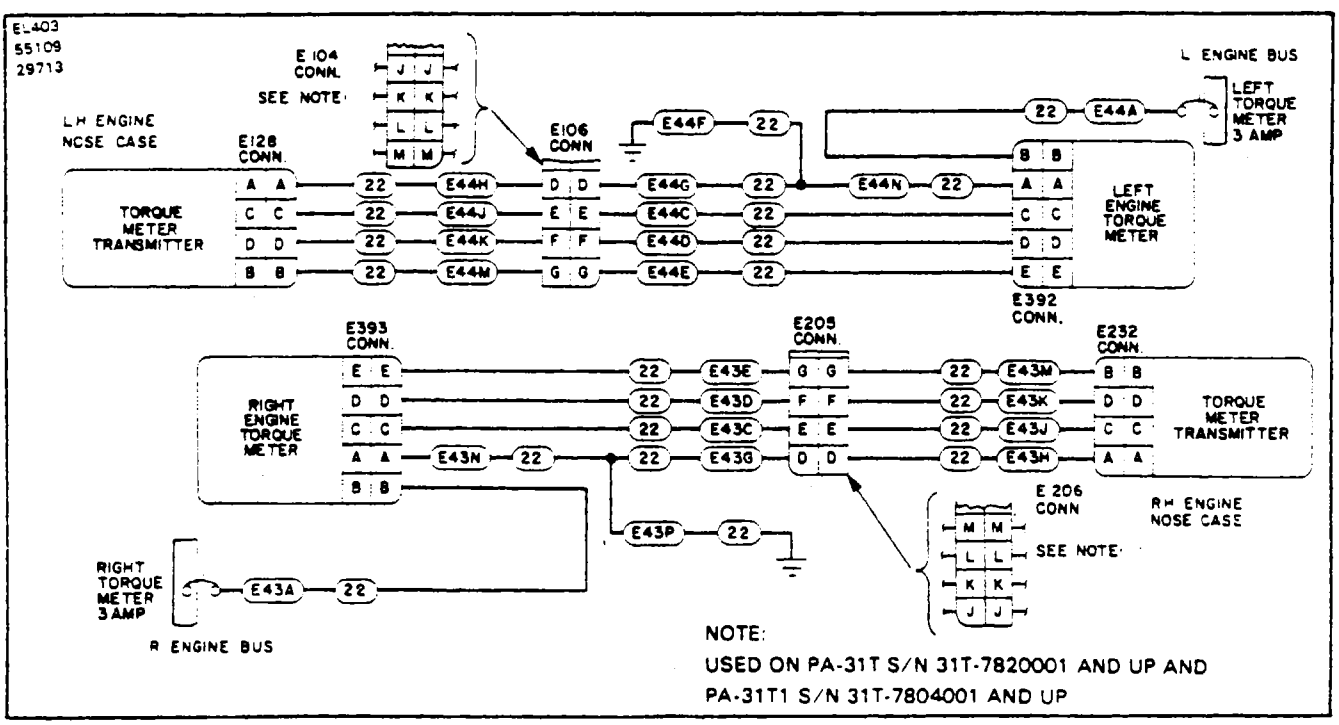

Figure 15-11. Torque Meters; Right and Left
PA-31T S/N 31T-7720008 and up and PA-31T1 S/N 31T-7804001 and up

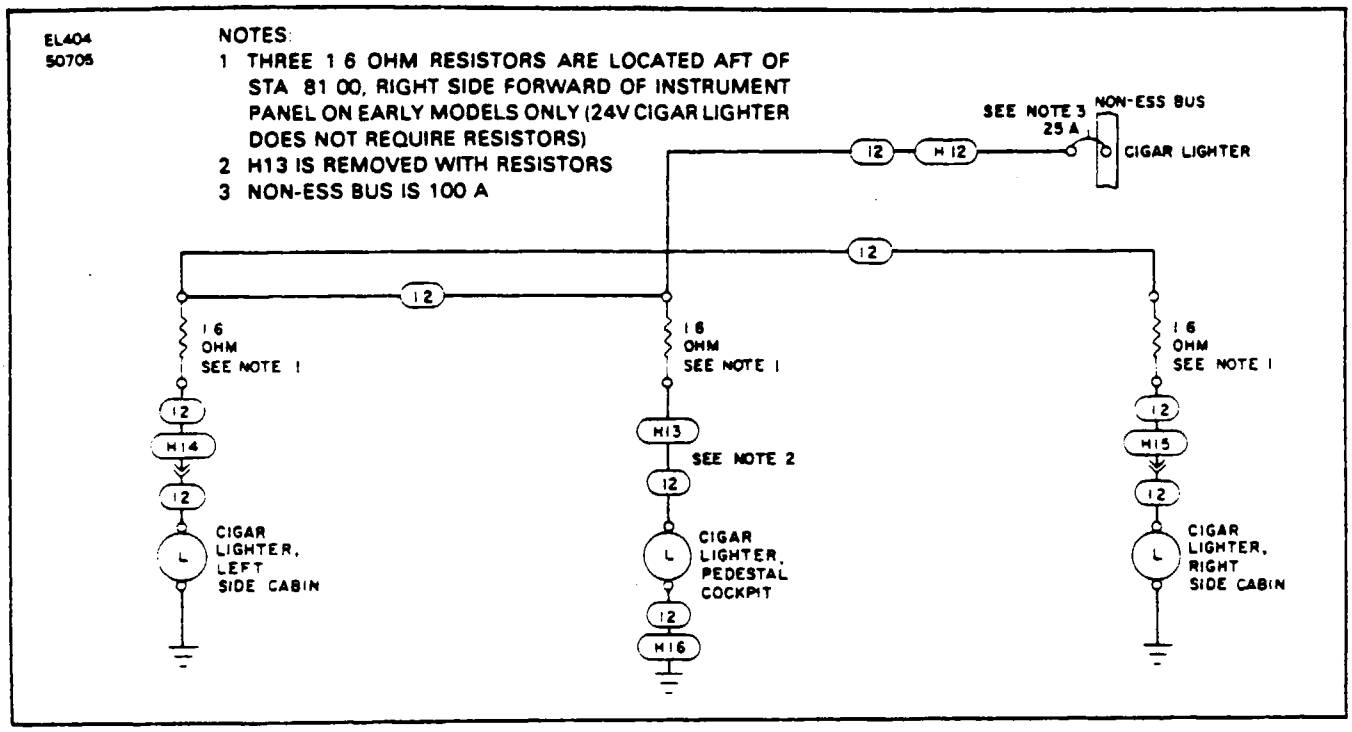

Figure 15-12. Cigar Lighter,
PA-31T S/N 31T-7400002 to -7620010

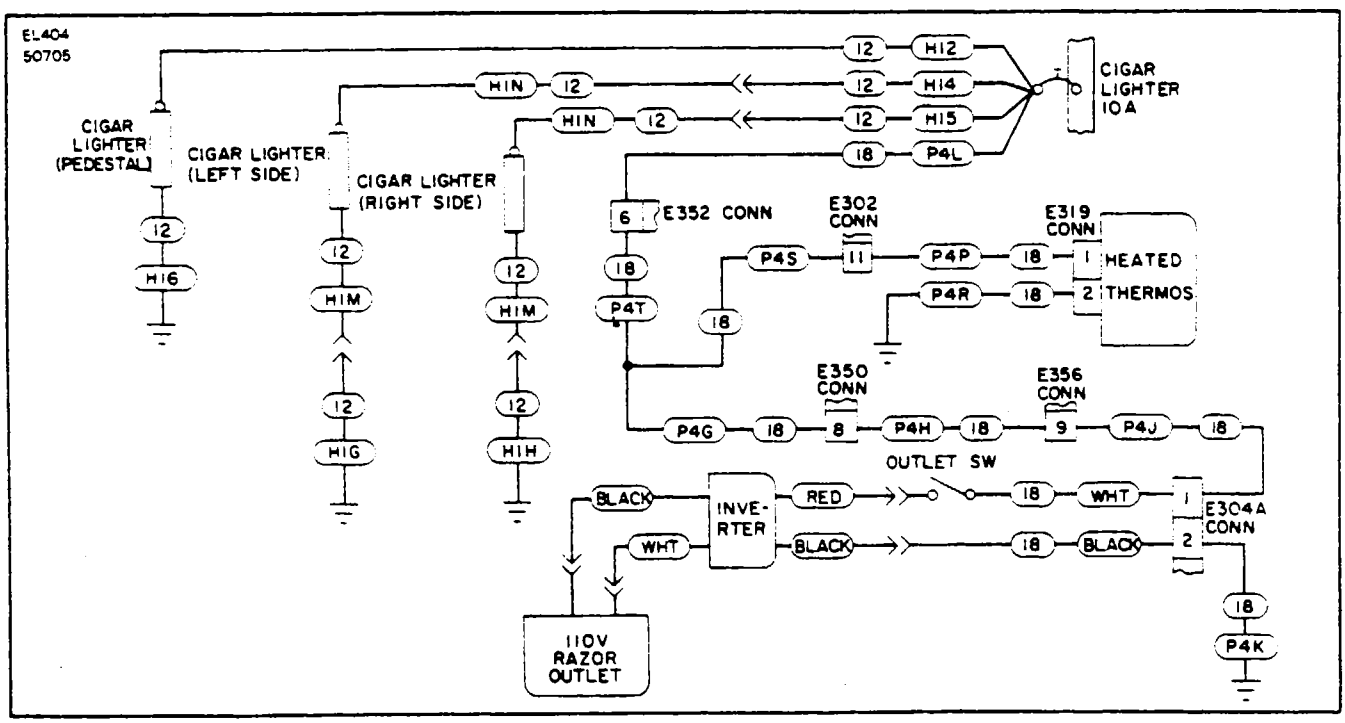

Figure 15-13. Cigar Lighter, Heated Thermos and Razor Outlet,
PA-31T S/N 31T-7620011 to -7720007

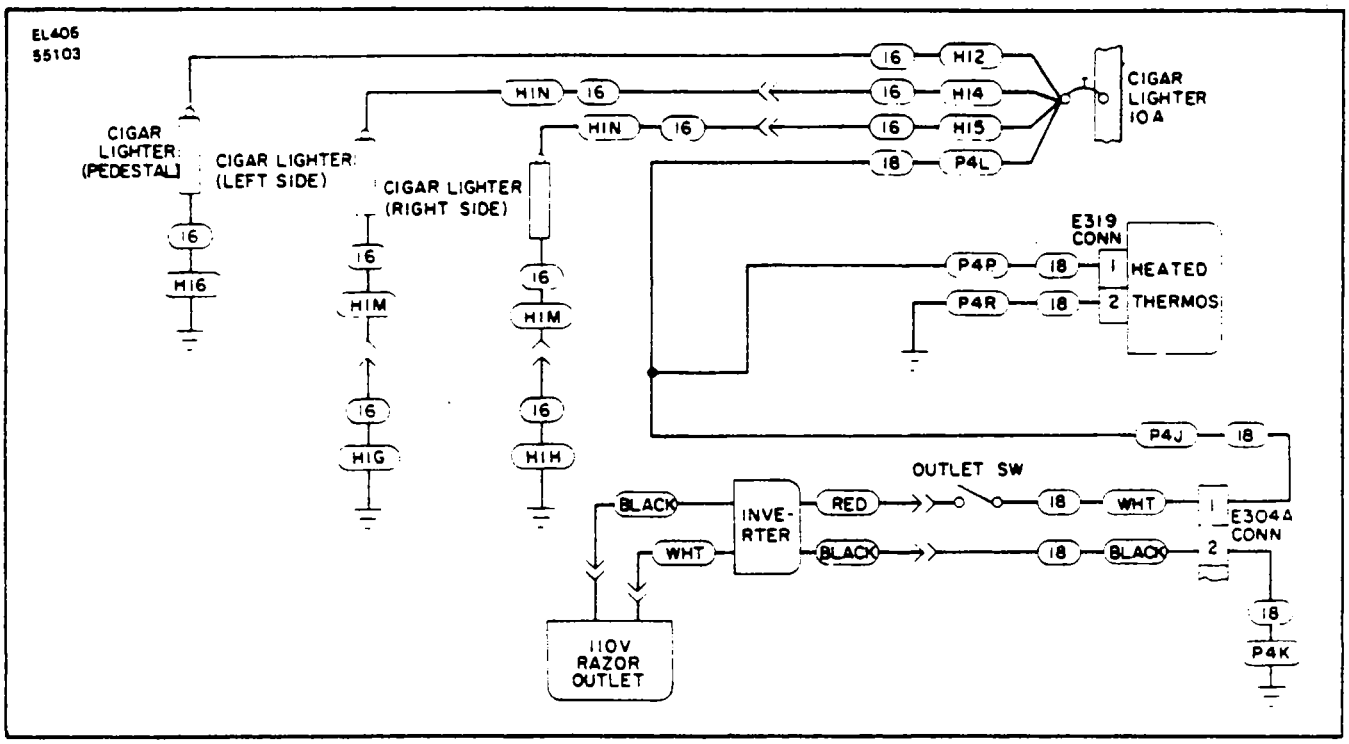

Figure 15-14. Cigar Lighter, Heated Thermos and Razor Outlet.
PA-31T S/N 31T-7720008 to -7720069

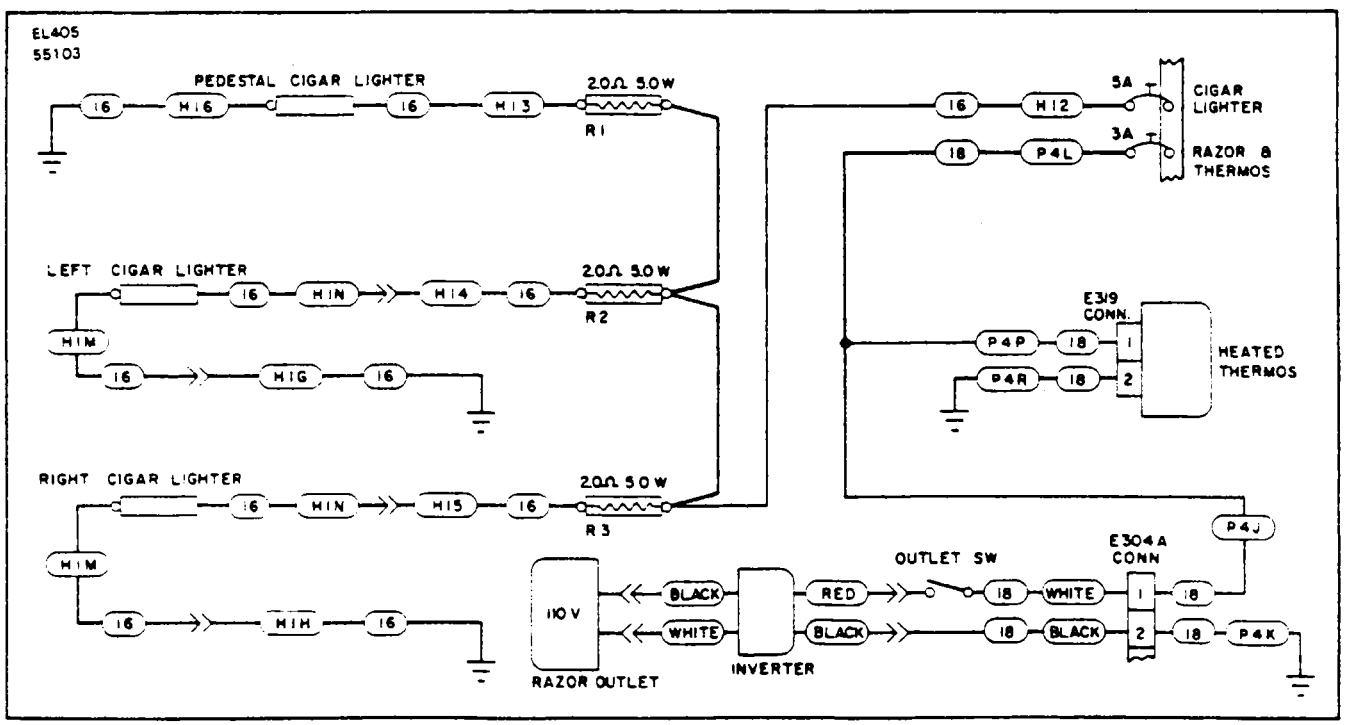

Figure 15-15. Cigar Lighter, Heated Thermos and Razor Outlet.
PA-31T S/N 31T-7820001 to -8020092 and PA-31T1 S/N 31T-7804001 to -8004057

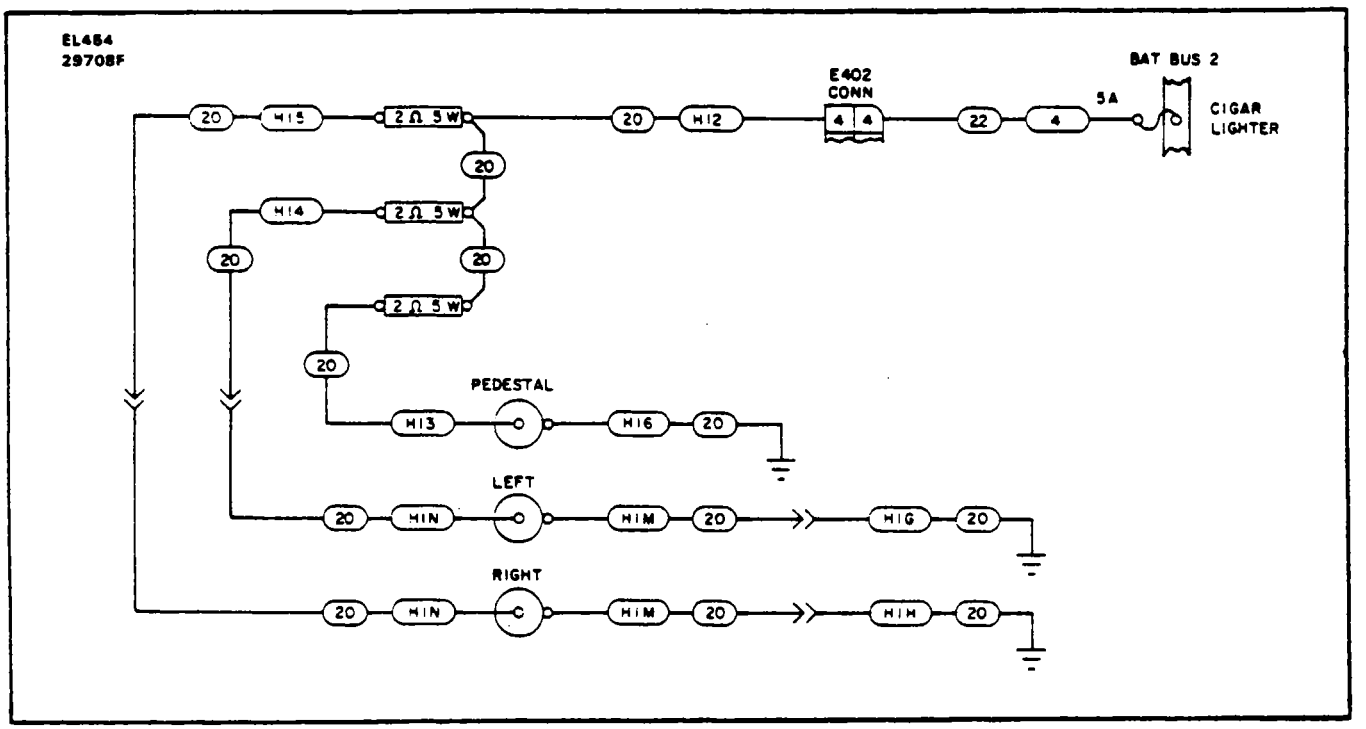

Figure 15-16. Cigar Lighter,
PA-31T S/N 31T-8120001 and up and PA-31T1 S/N 31T-8104001 and up

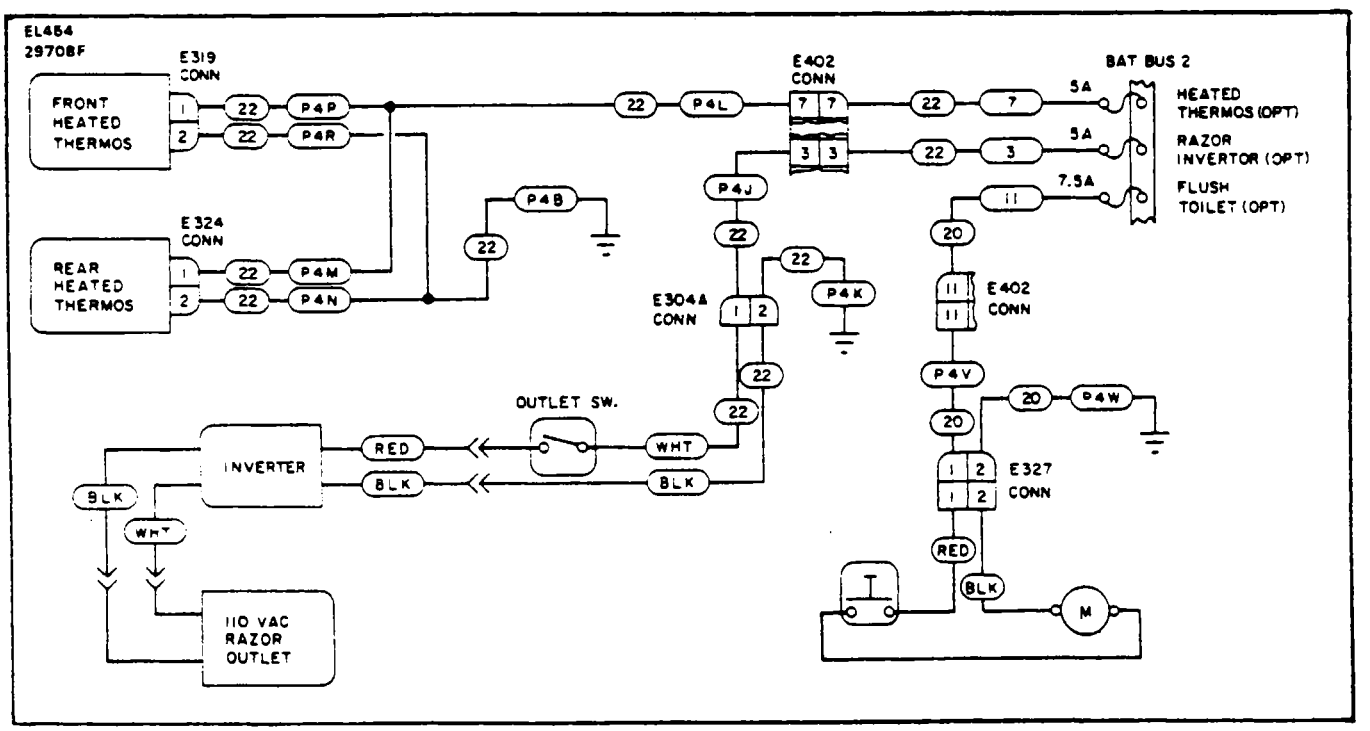

Figure 15-17. Heated Thermos, Razor Inverter and Flush Toilet,
PA-31T S/N 31T-8120001 and up and PA-31T1 S/N 31T-8104001 and up

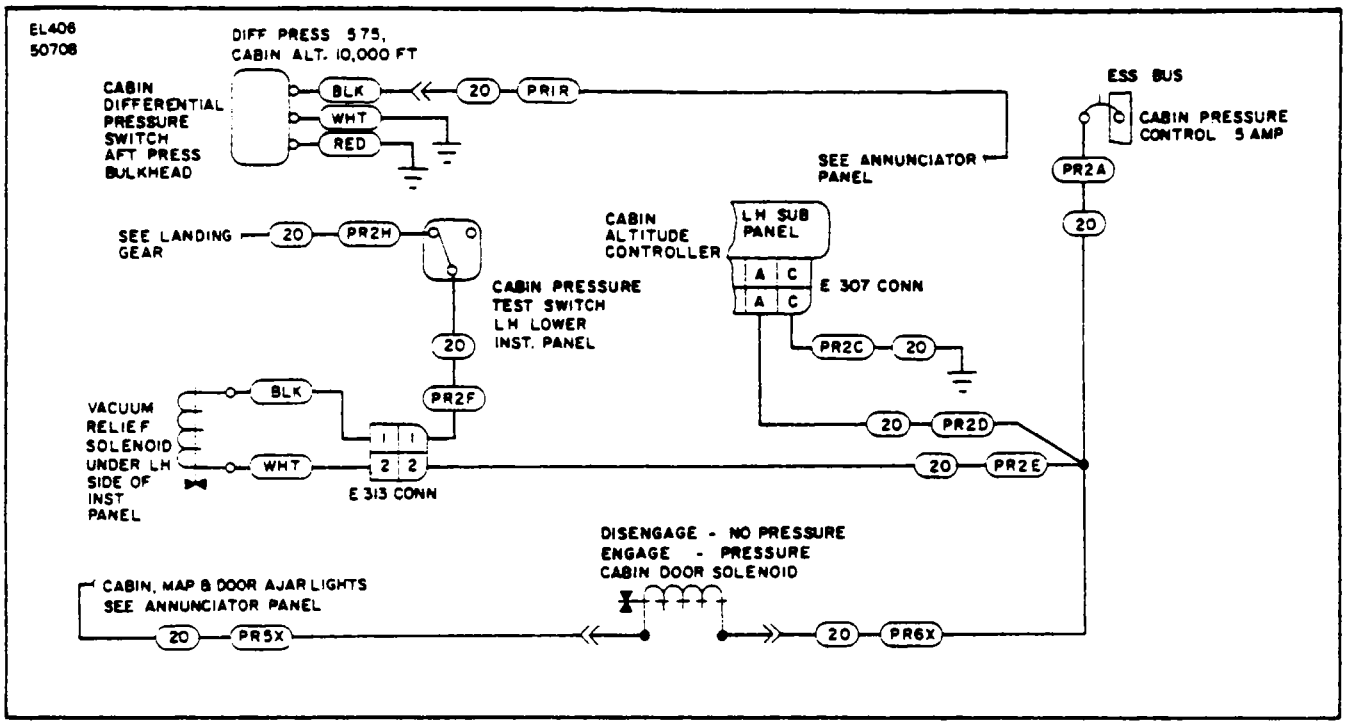

Figure 15-18. Cabin Pressure Control,
PA-31T S/N 31T-7400002 to -7720007

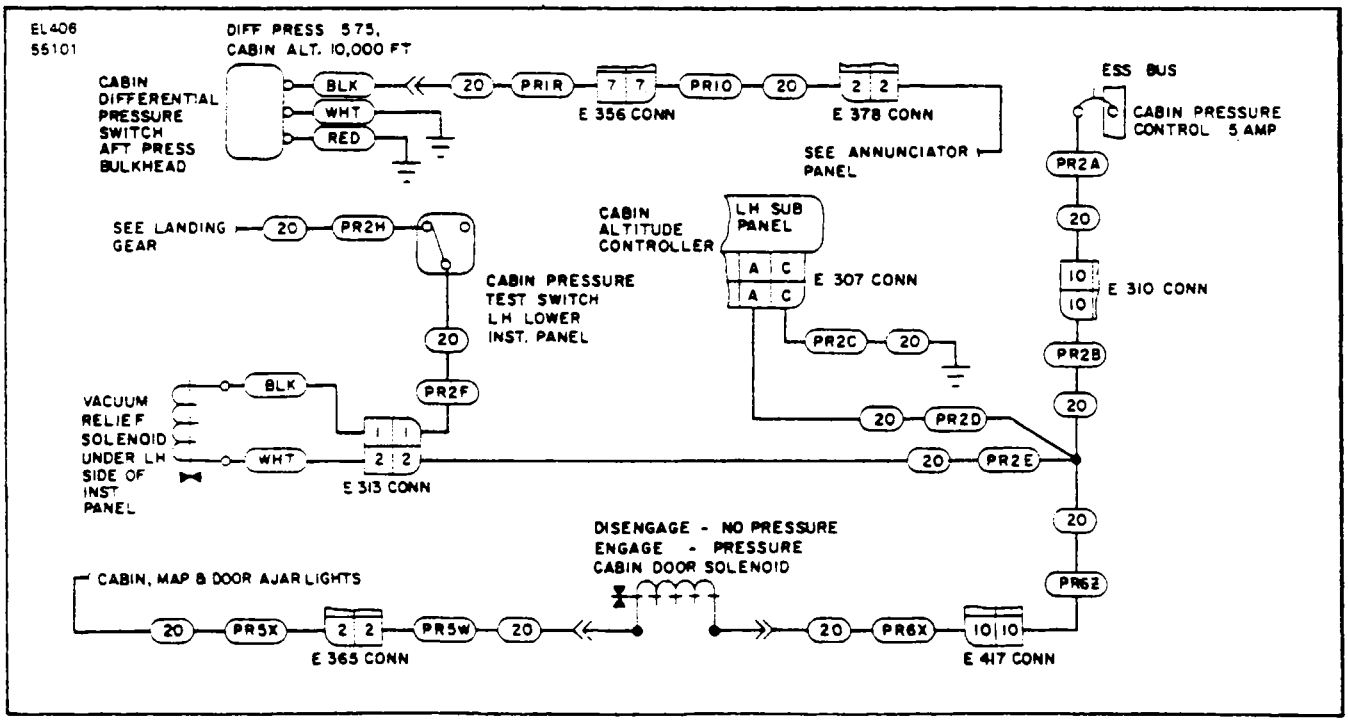

Figure 15-19. Cabin Pressure Control,
PA-31T S/N 31T-7720008 to -7720069

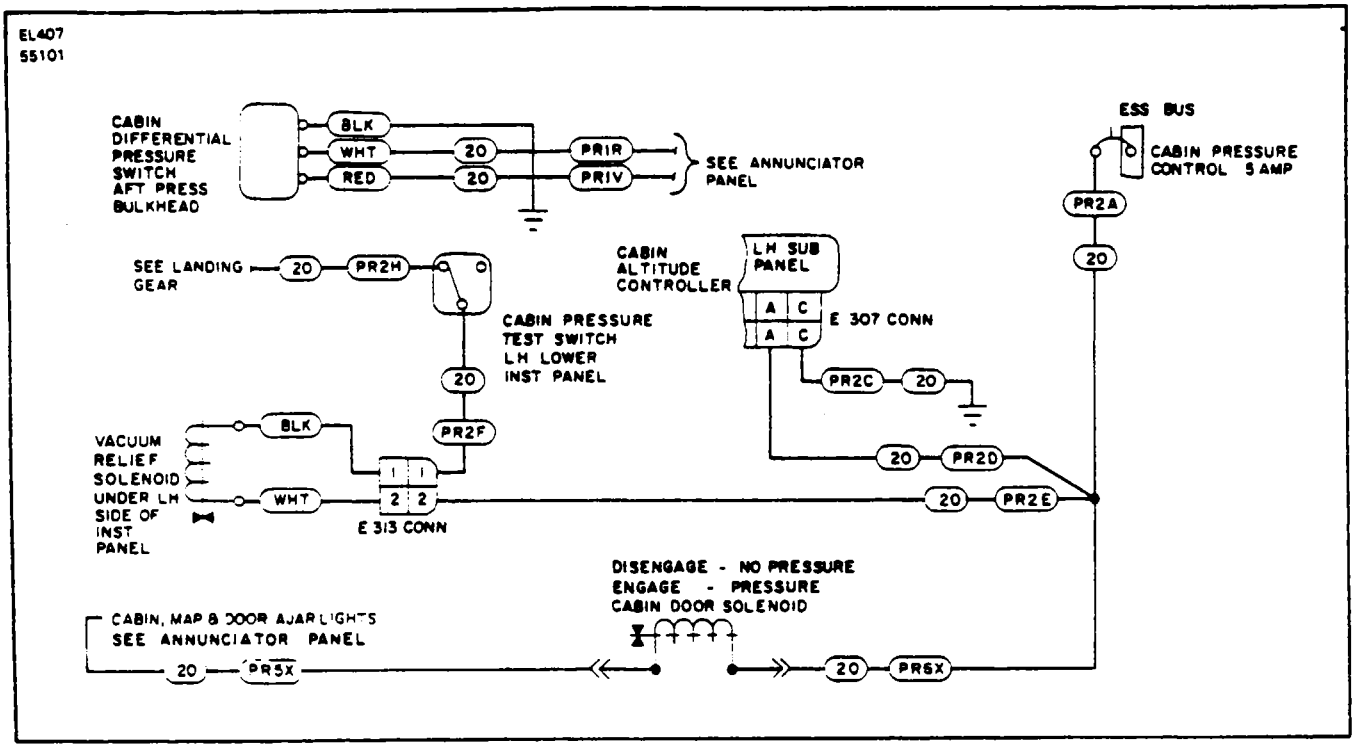

Figure 15-20. Cabin Pressure Control
PA-31T S/N 31T-7820001 to 7820092 and PA-31T1 S/N 31T-7804001 to 7804011

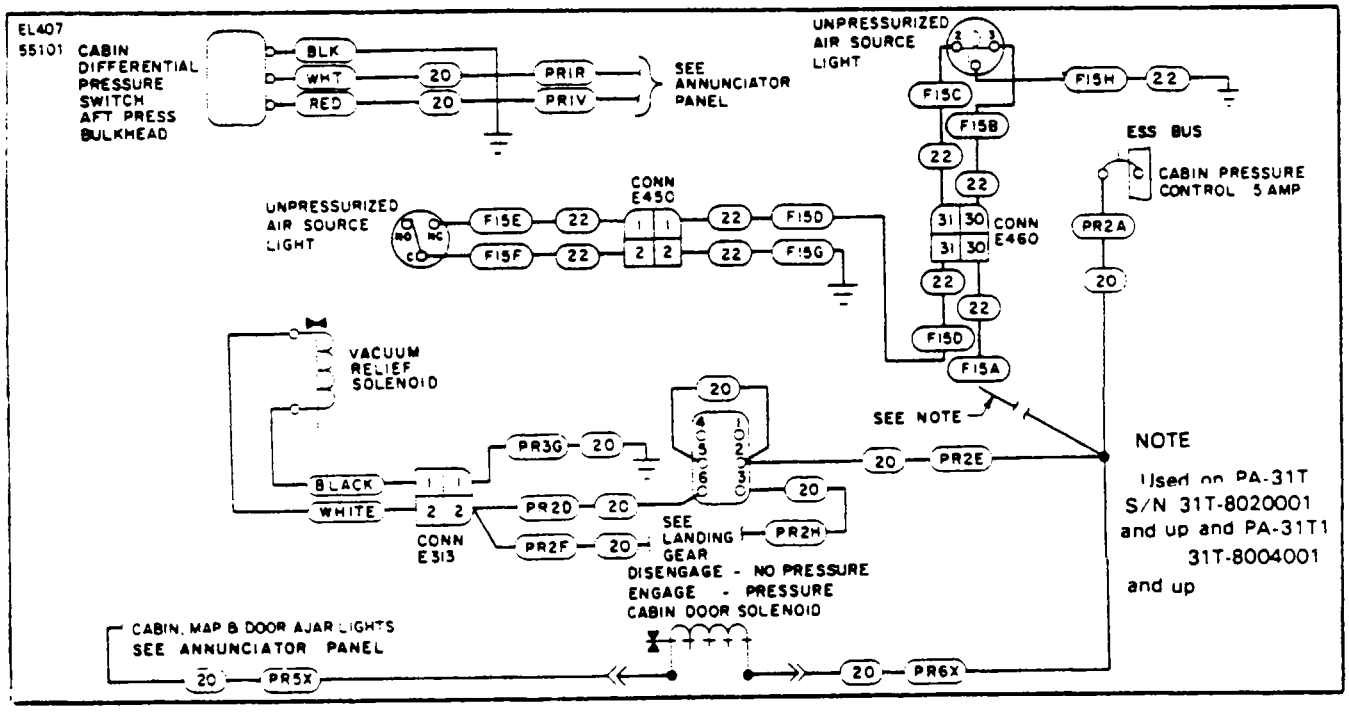

Figure 15-21. Cabin Pressure Control.
PA-31T S/N 31T-7920001 to -8020069 and PA-31T1 S/N 31T-7904001 to -8004036

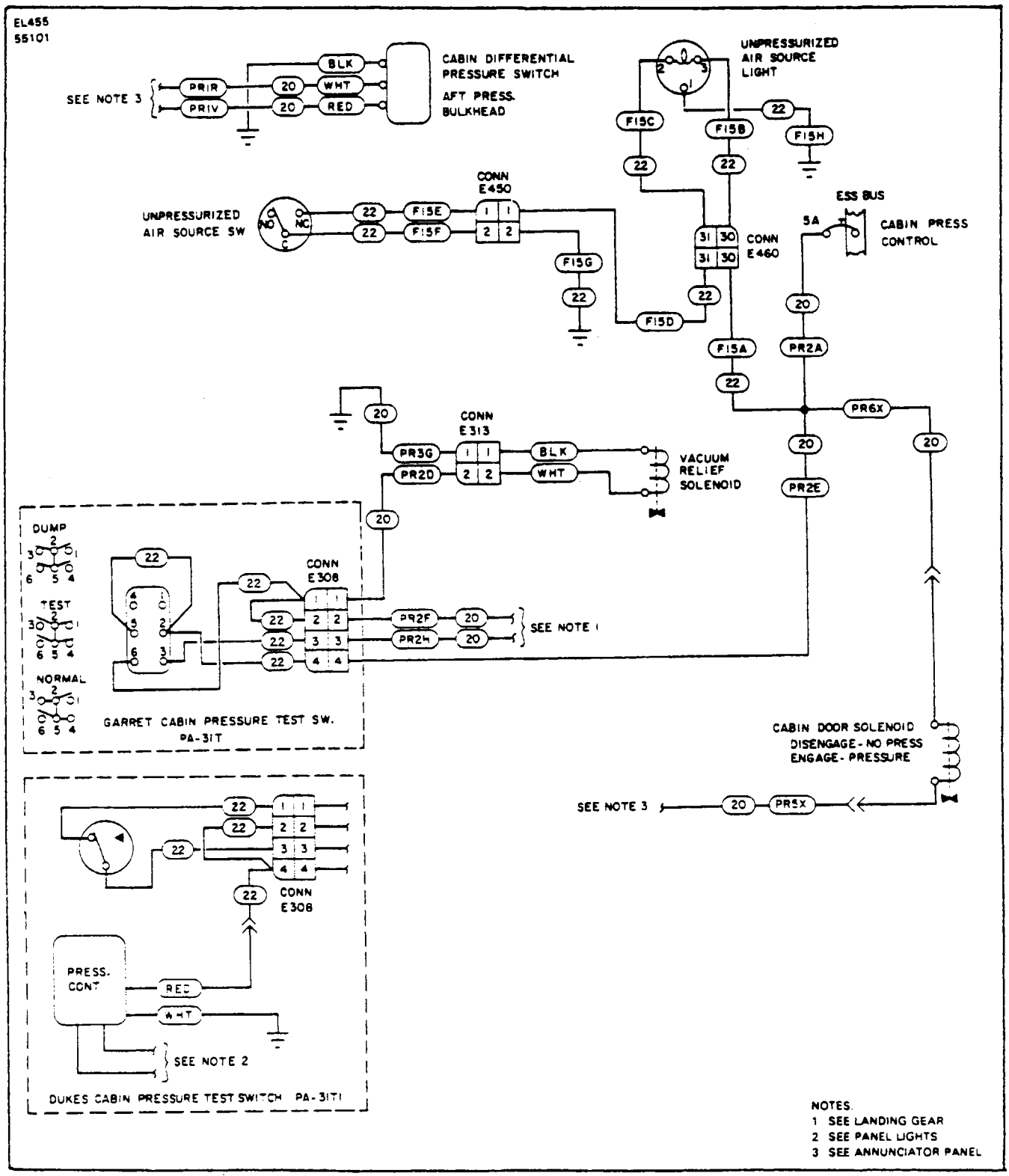

Figure 15-22. Cabin Pressure Control.
PA-31T S/N 31T-8020070 to -8020092 and PA-31T S/N 31T-8004037 to -8004057

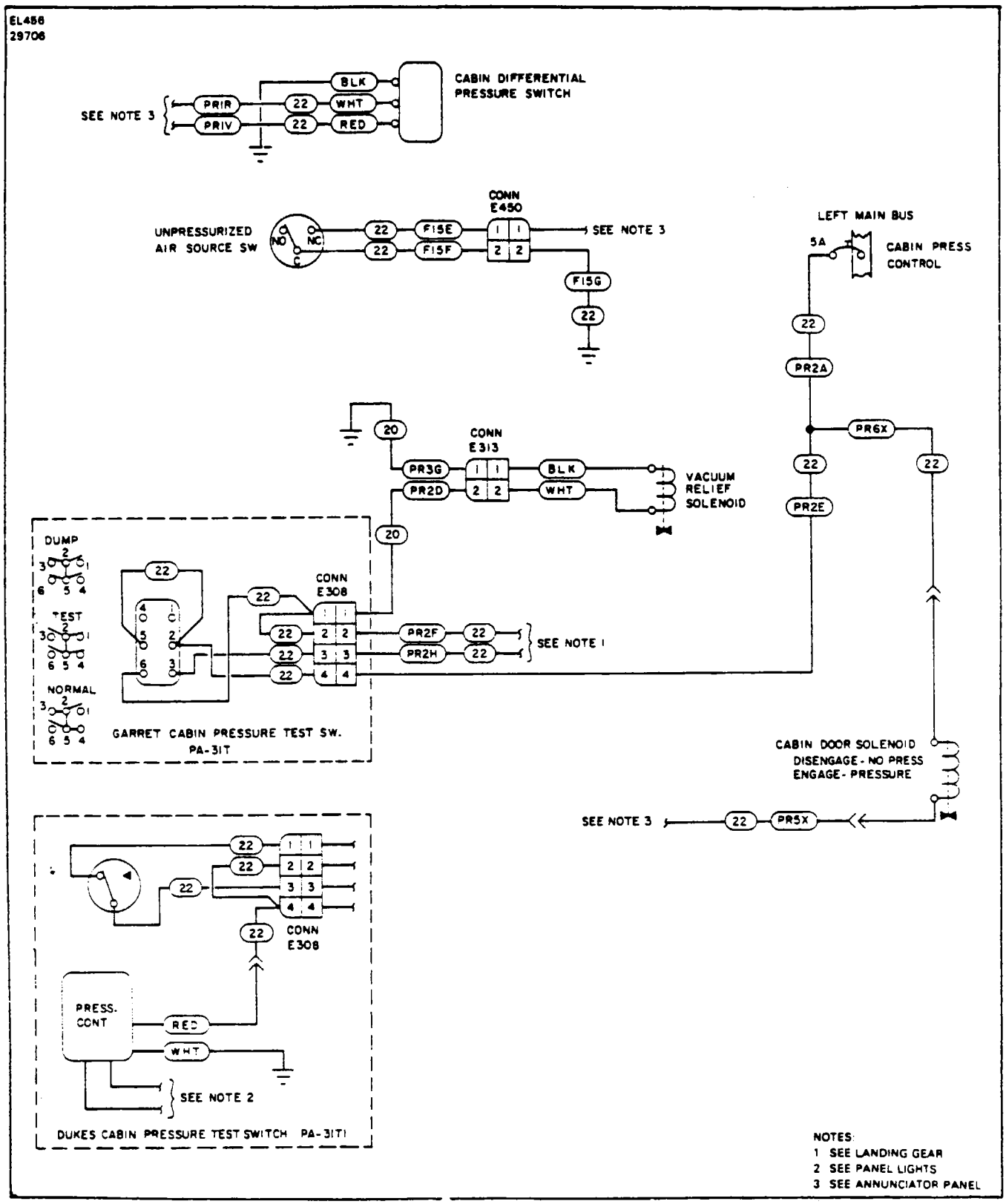

Figure 15-23. Cabin Pressure Control
PA-31T S/N 31T-8120001 and up and PA-31T1 S/N 31T-8104001 and up

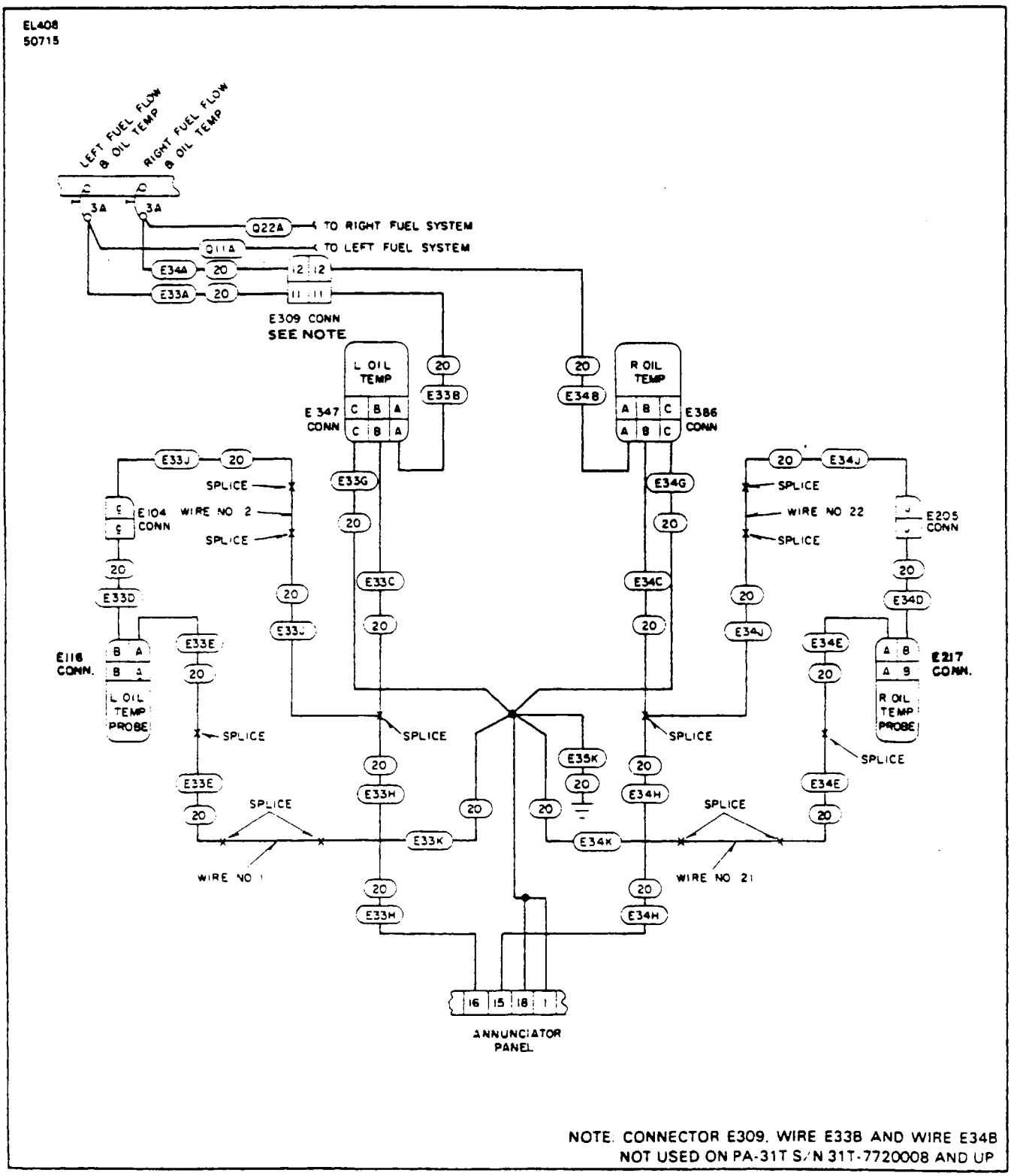

NOTE. CONNECTOR E309, WIRE E33B AND WIRE E34B NOT USED ON PA-31T S/N 31T-7720008 AND UP

Figure 15-24. Oil Temperature; Right and Left, PA-31T S/N 31T-7400002 to -7720028

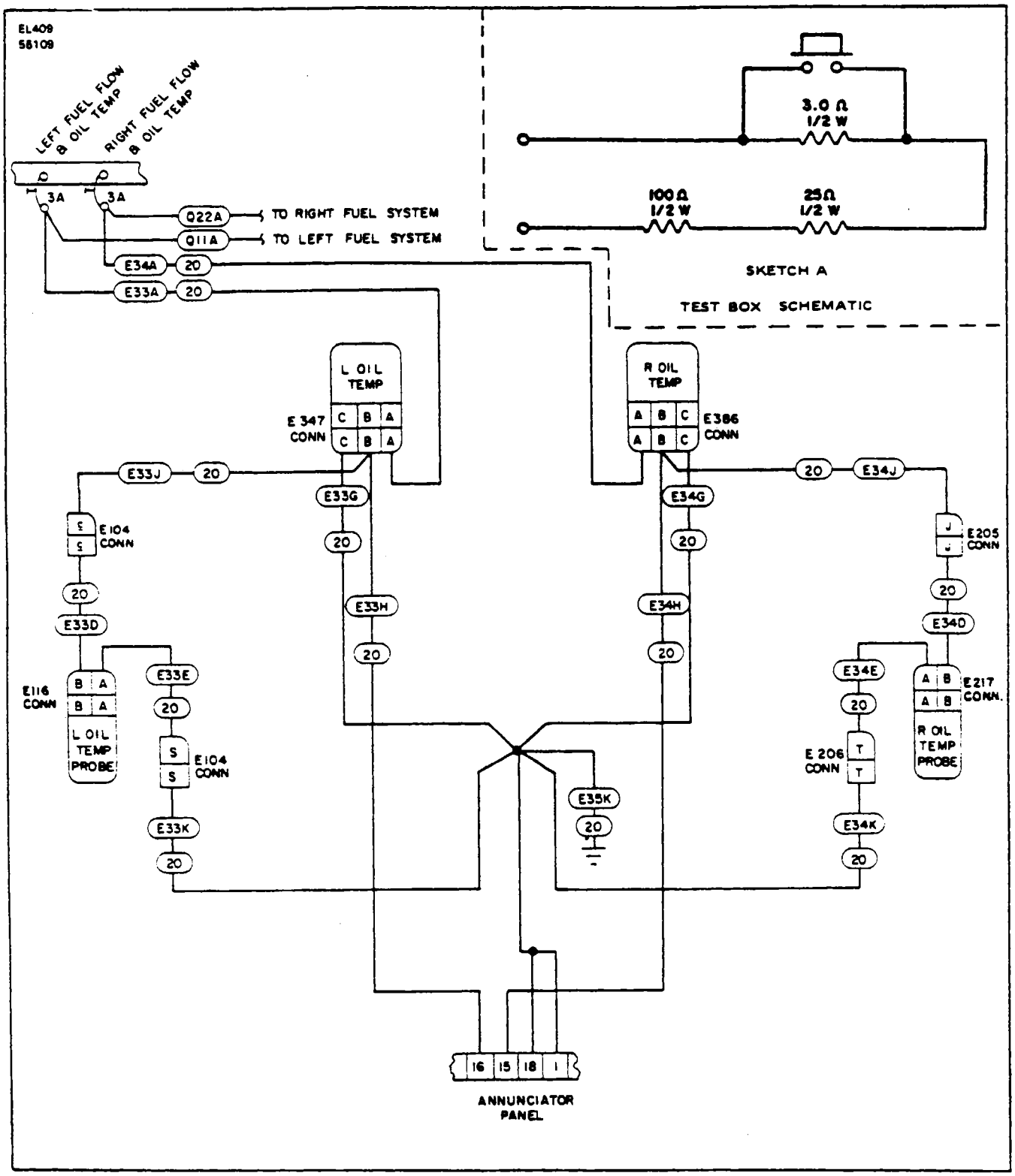

Figure 15-25. Oil Temperature; Right and Left.
PA-31T S/N 31T-7720029 to -7720069

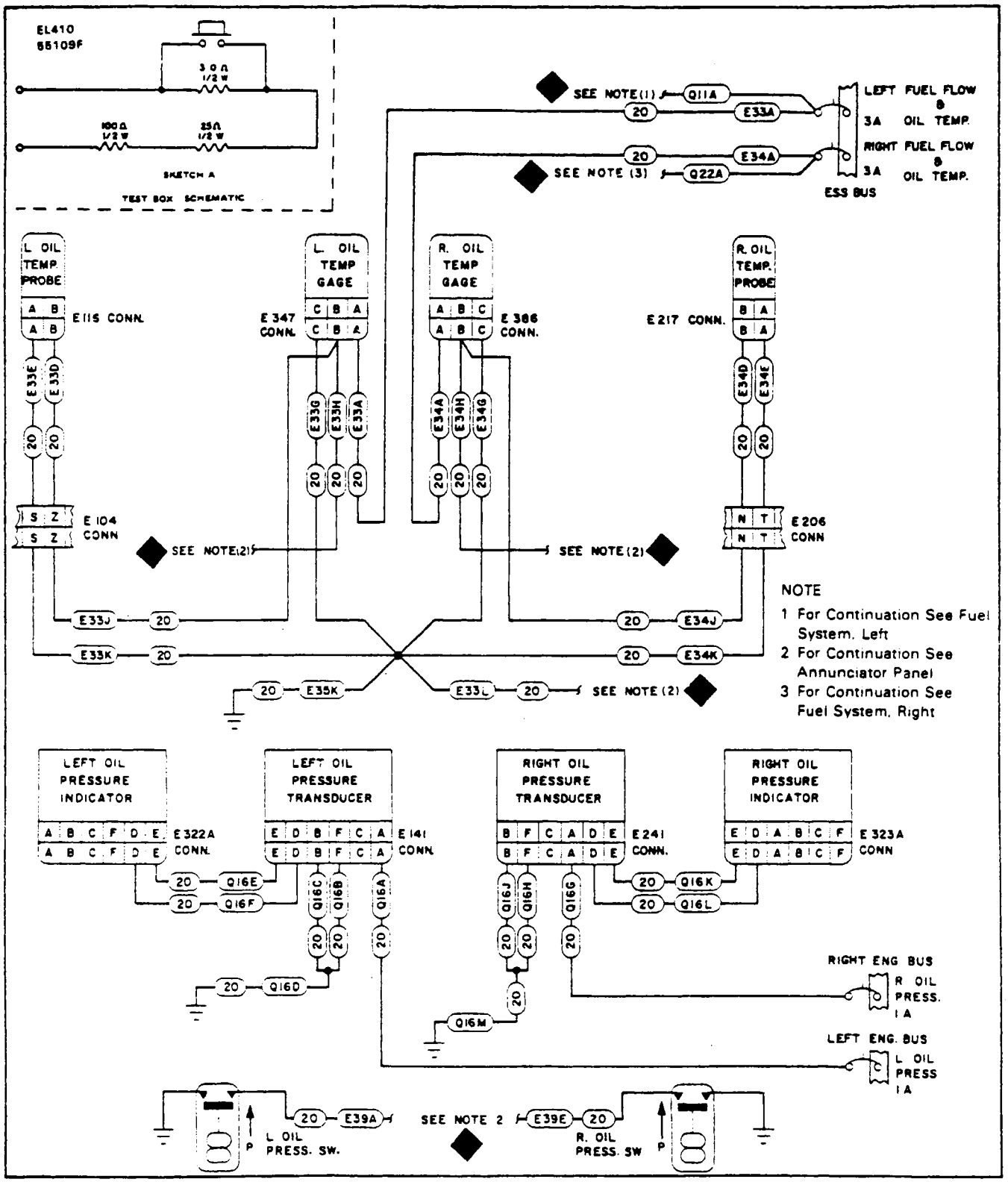

Figure 15-26. Oil Temperature, Oil Pressure; Right and Left
PA-31T S/N 31T-7820001 to 8020092 and PA-31T1 S/N 31T-7804001 to 8004057

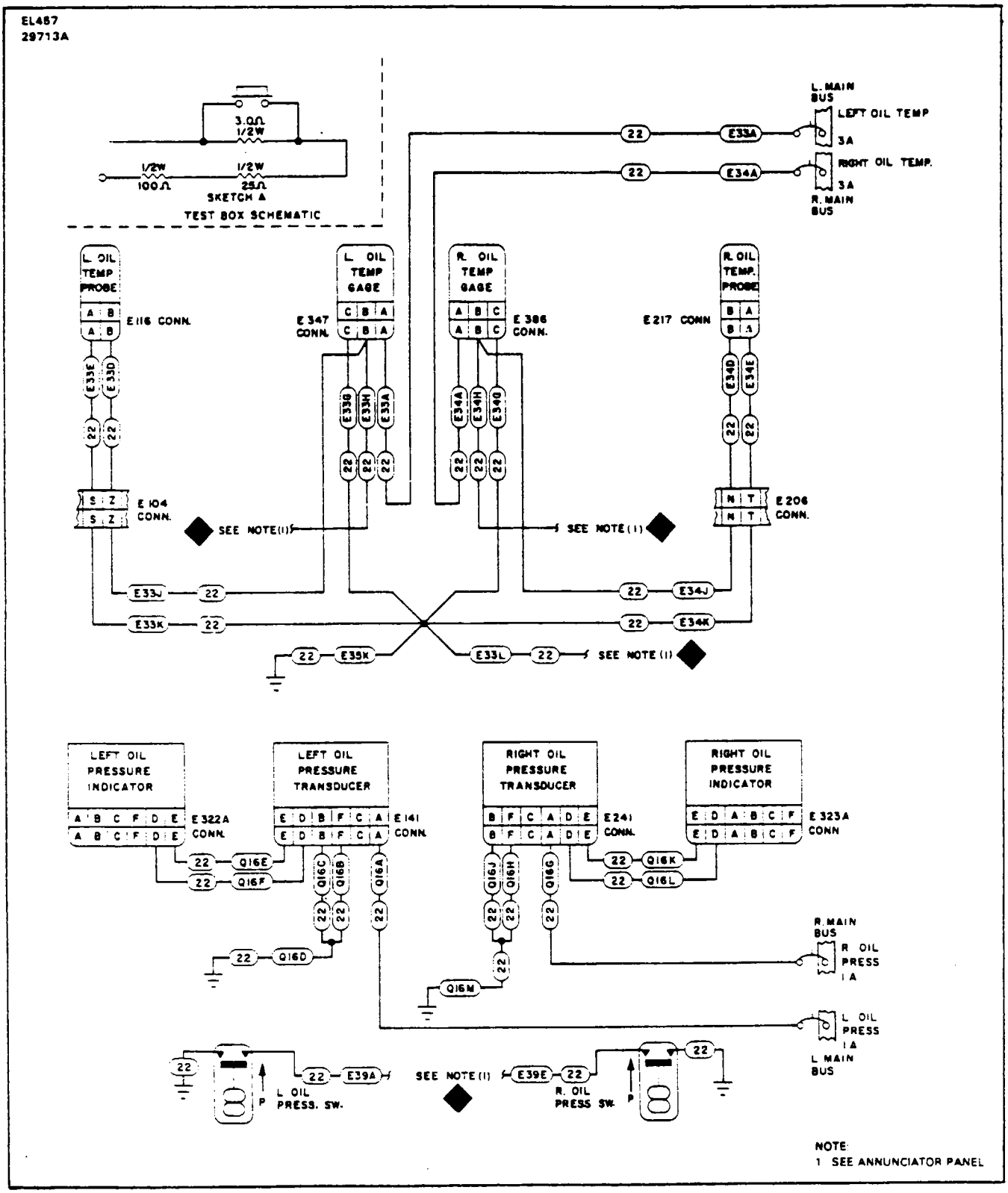

Figure 15-27. Oil Temperature, Oil Pressure; Right and Left
PA-31T S/N 31T-8120001 and up and PA-31T1 S/N 31T-8104001 and up

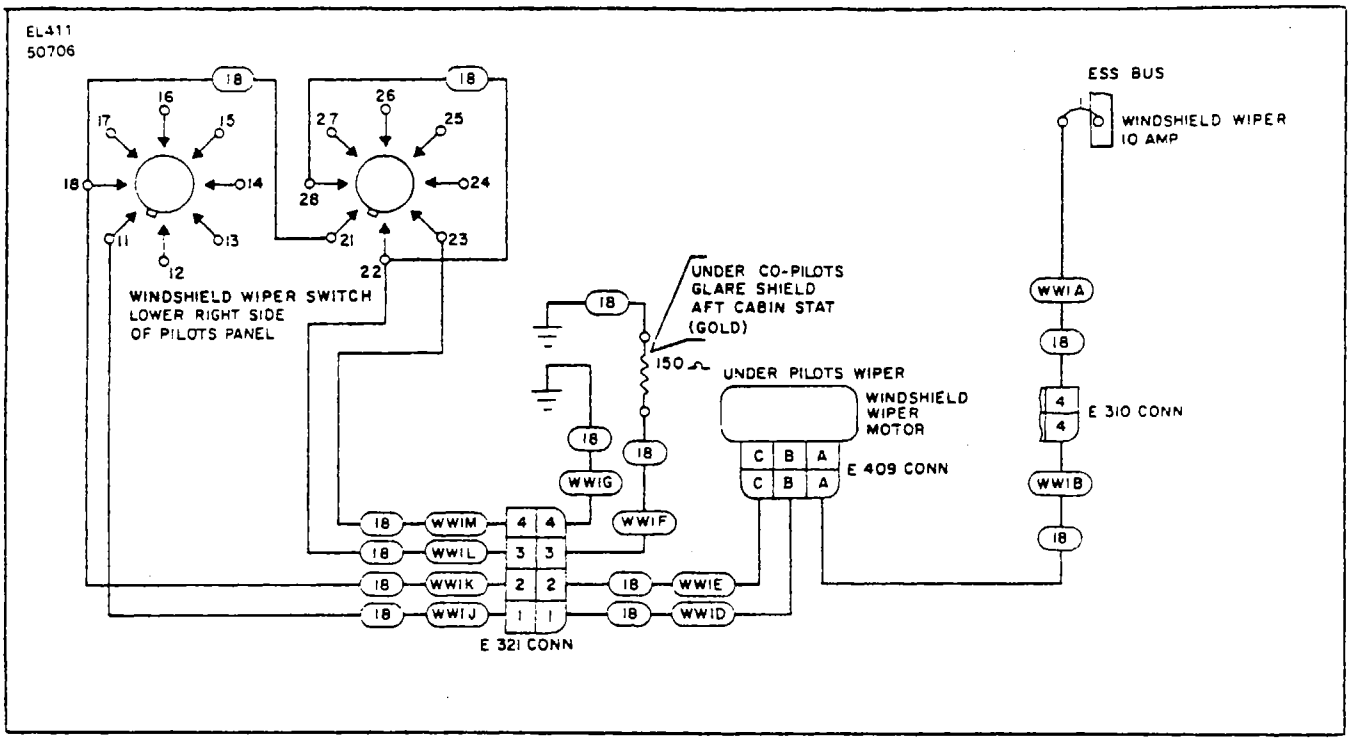

Figure 15-28. Windshield Wiper,
PA-31T S/N 31T-7400002 to -7720007

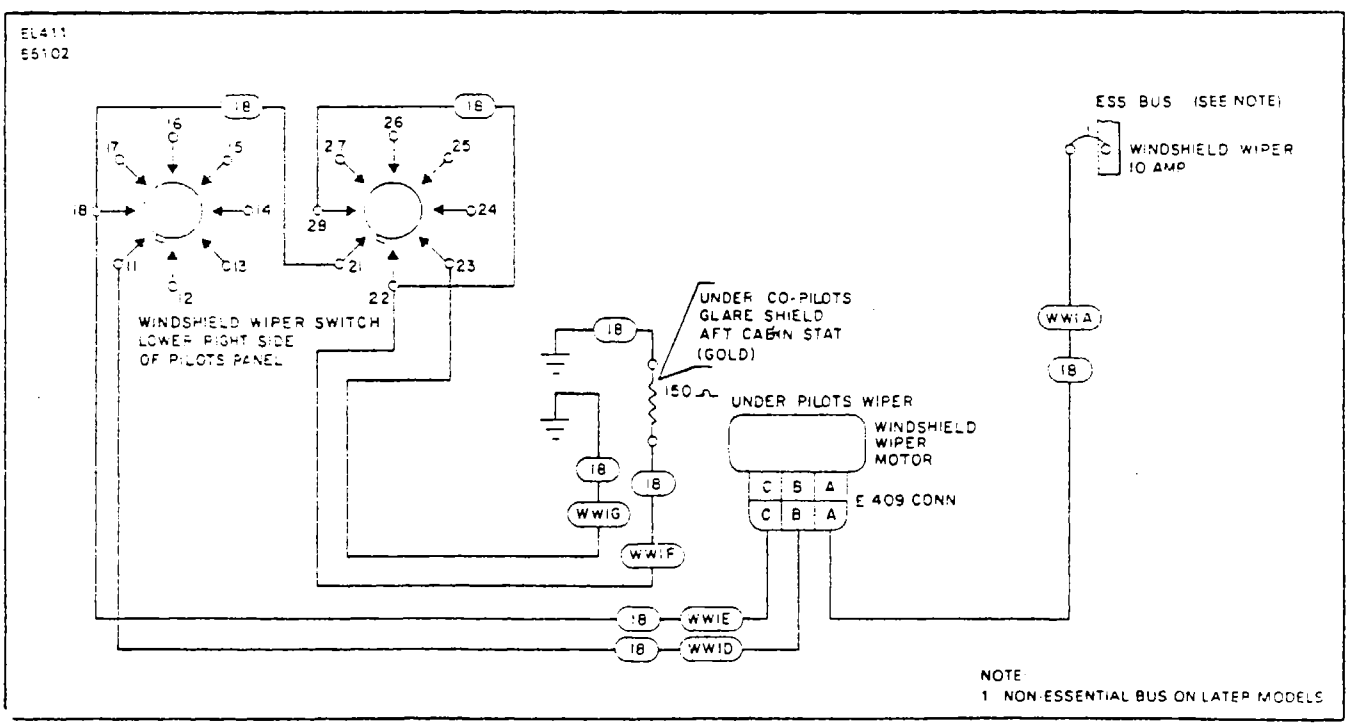

Figure 15-29. Windshield Wiper
PA-31T S/N 31T-7720008 and up and PA-31T1 S/N 31T-7804001 and up

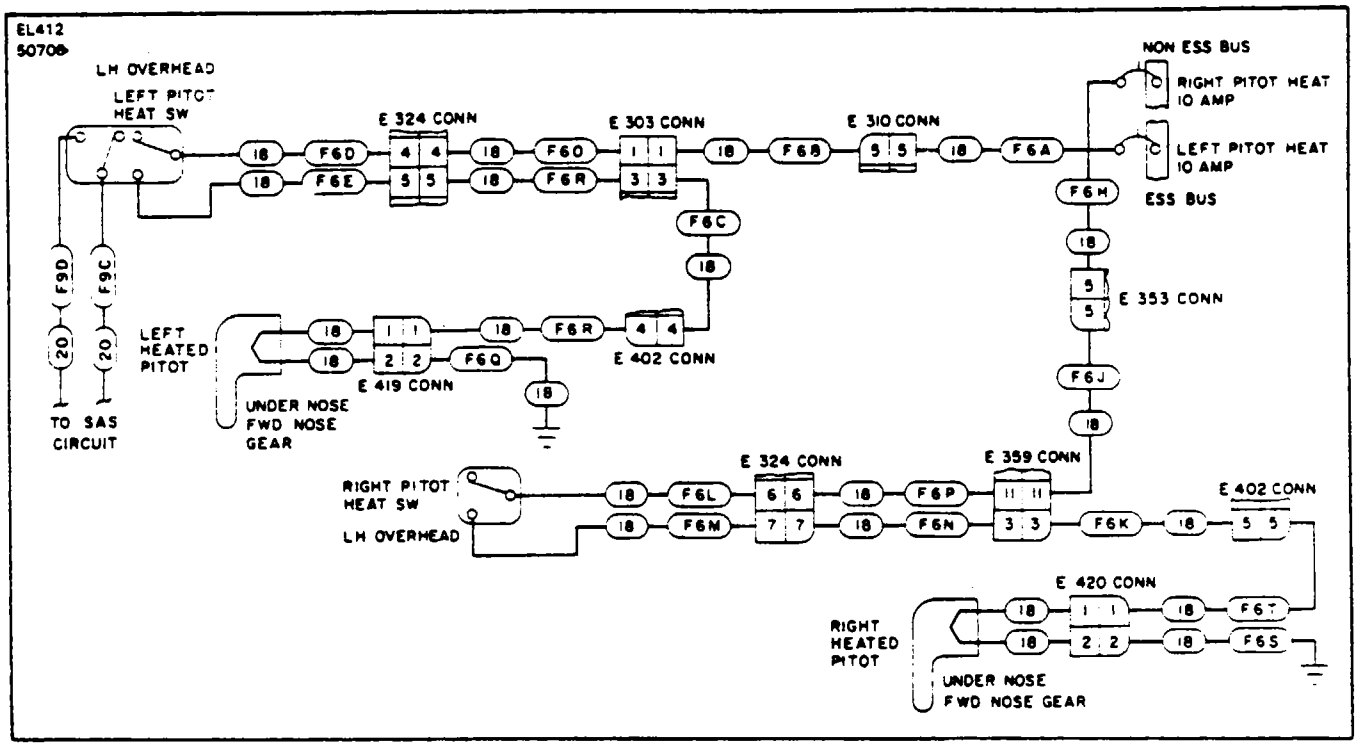

Figure 15-30. Pitot Heat; Right and Left,
PA-31T S/N 31T-7400002 to -7720007

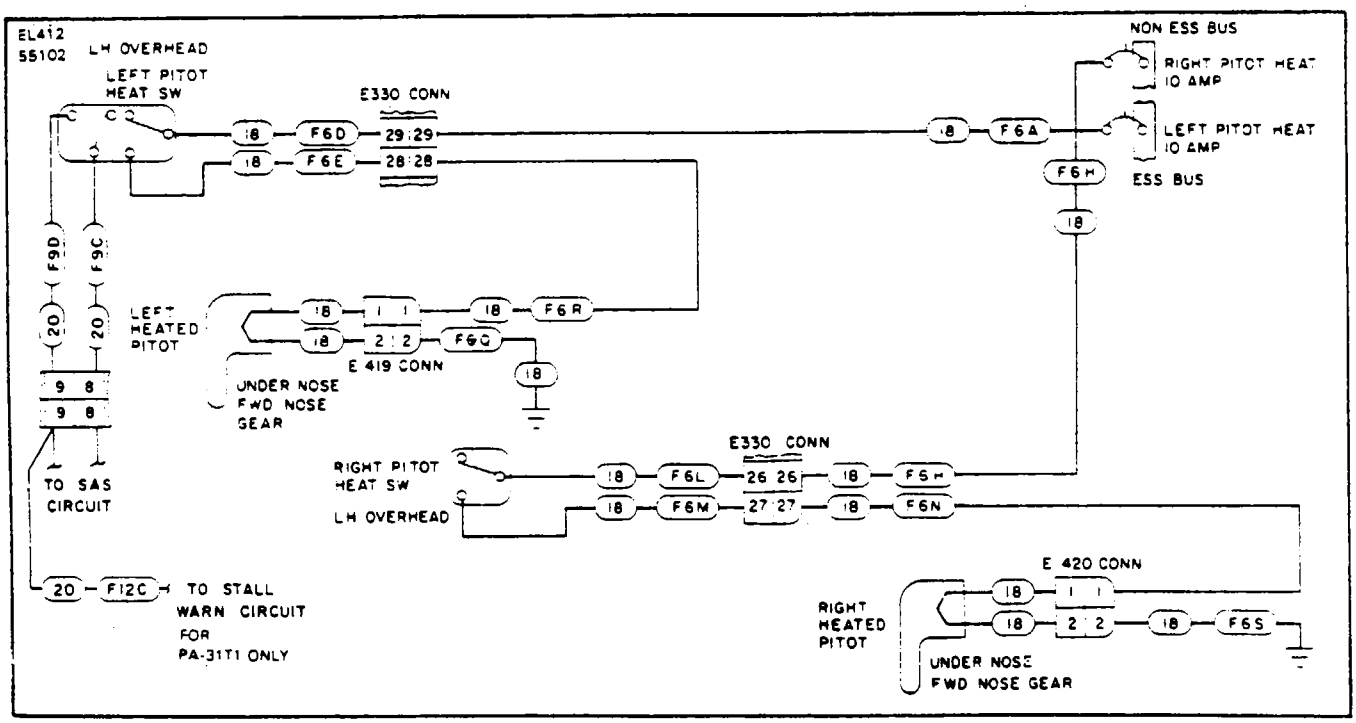

Figure 15-31. Pitot Heat; Right and Left,
PA-31T S/N 31T-7720008 to -8020092 and PA-31T1 S/N 31T-7804001 to -8004057

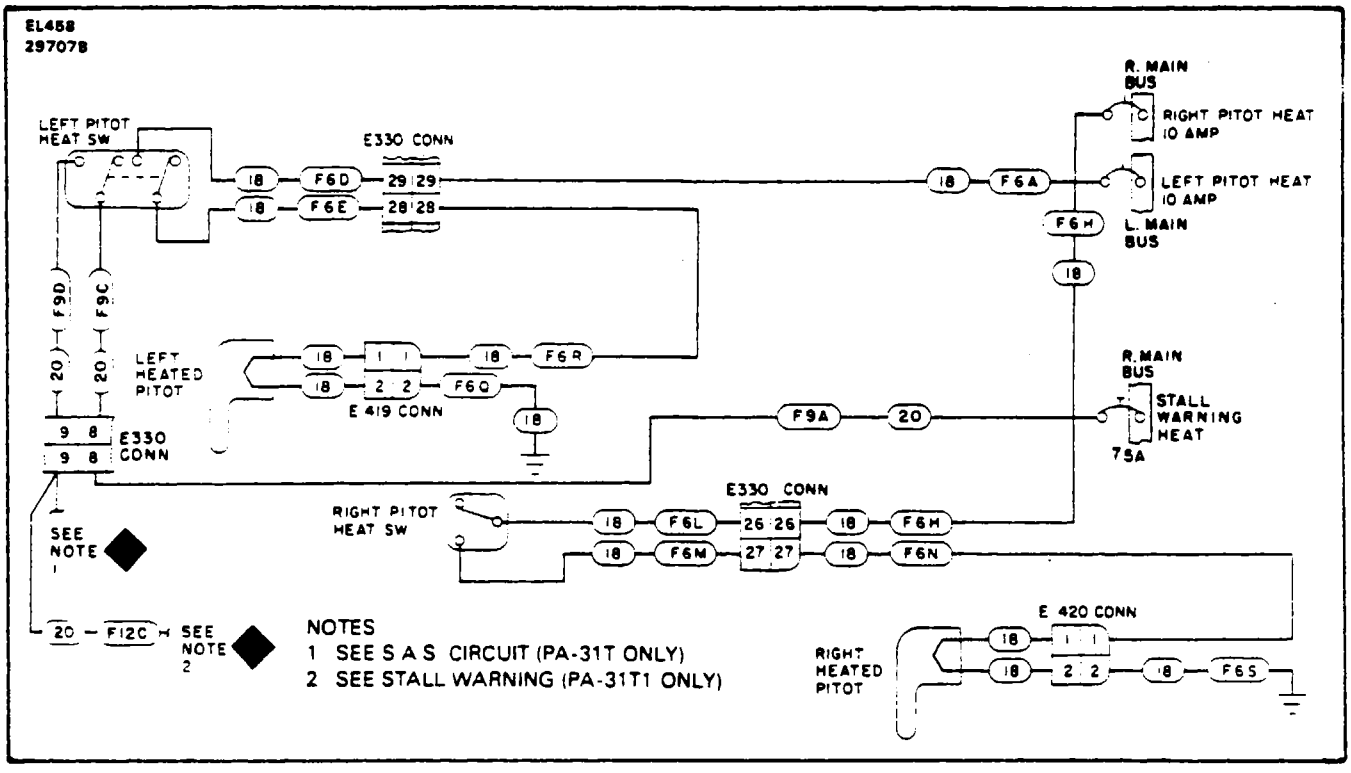

Figure 15-32. Pitot Heat; Right and Left,
PA-31T S/N 31T-8120001 and up and PA-31T1 S/N 31T-8104001 and up

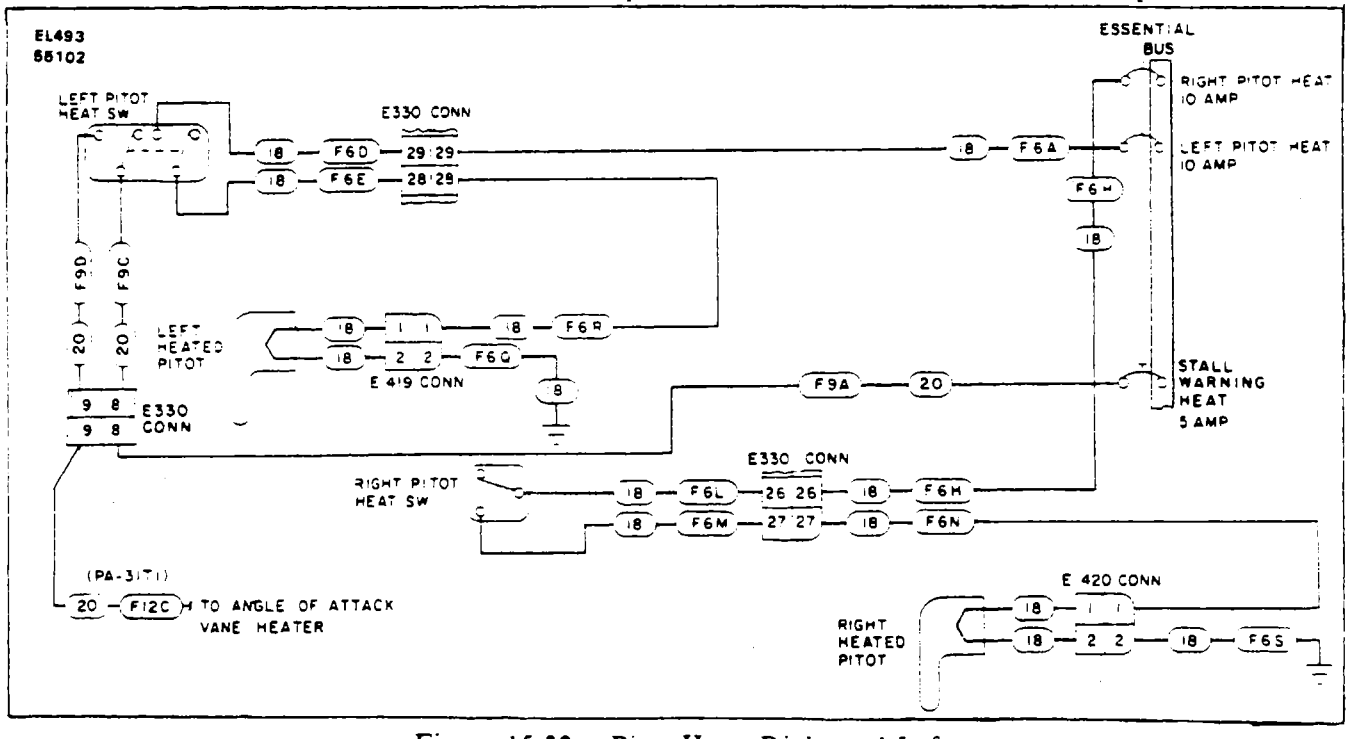

Figure 15-32a. Pitot Heat: Right and Left,
PA-31T S/N 31T-8104001 and up

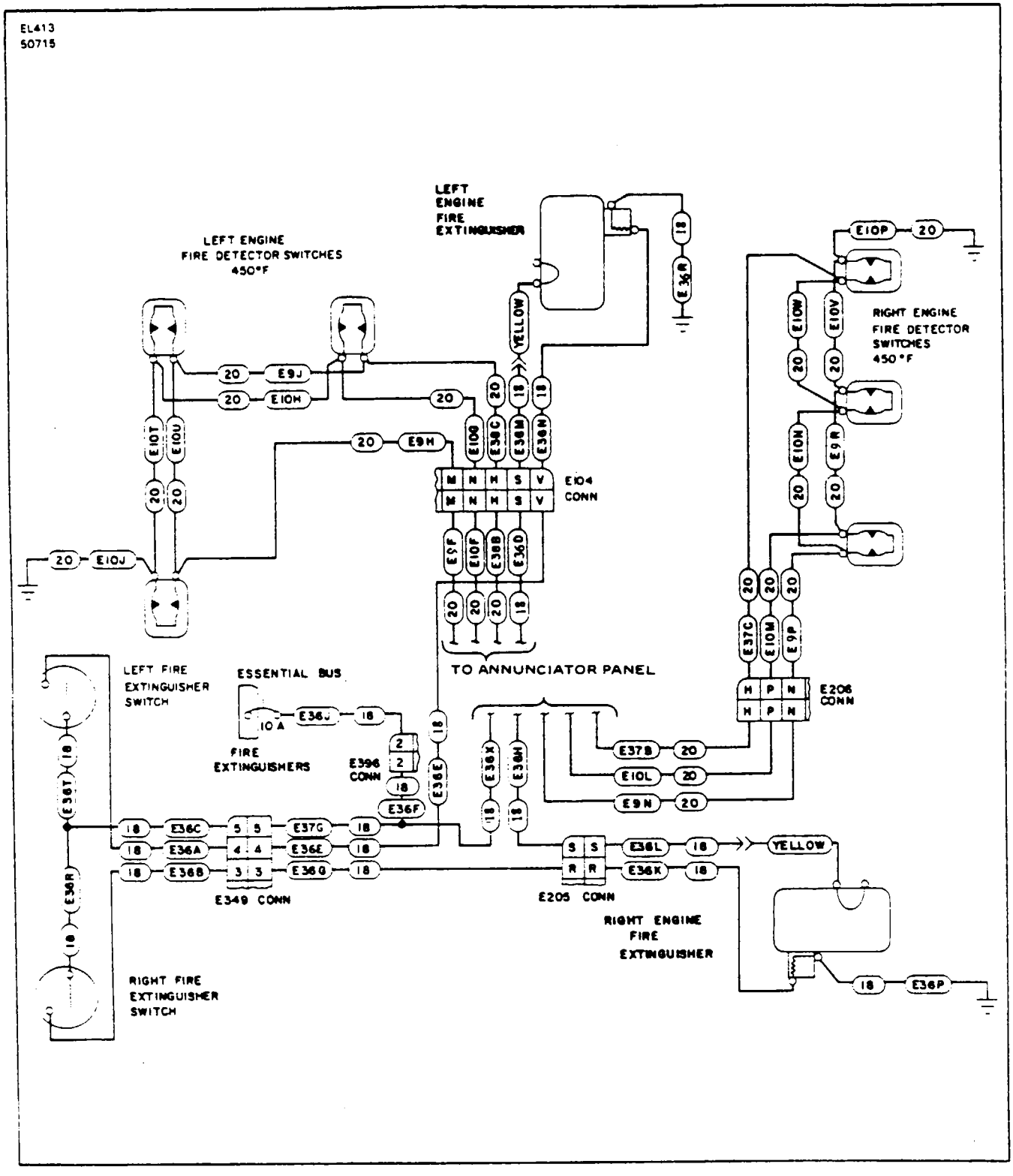

Figure 15-33. Fire Extinguishers, PA-31T S/N 31T-7400002 to -7720007

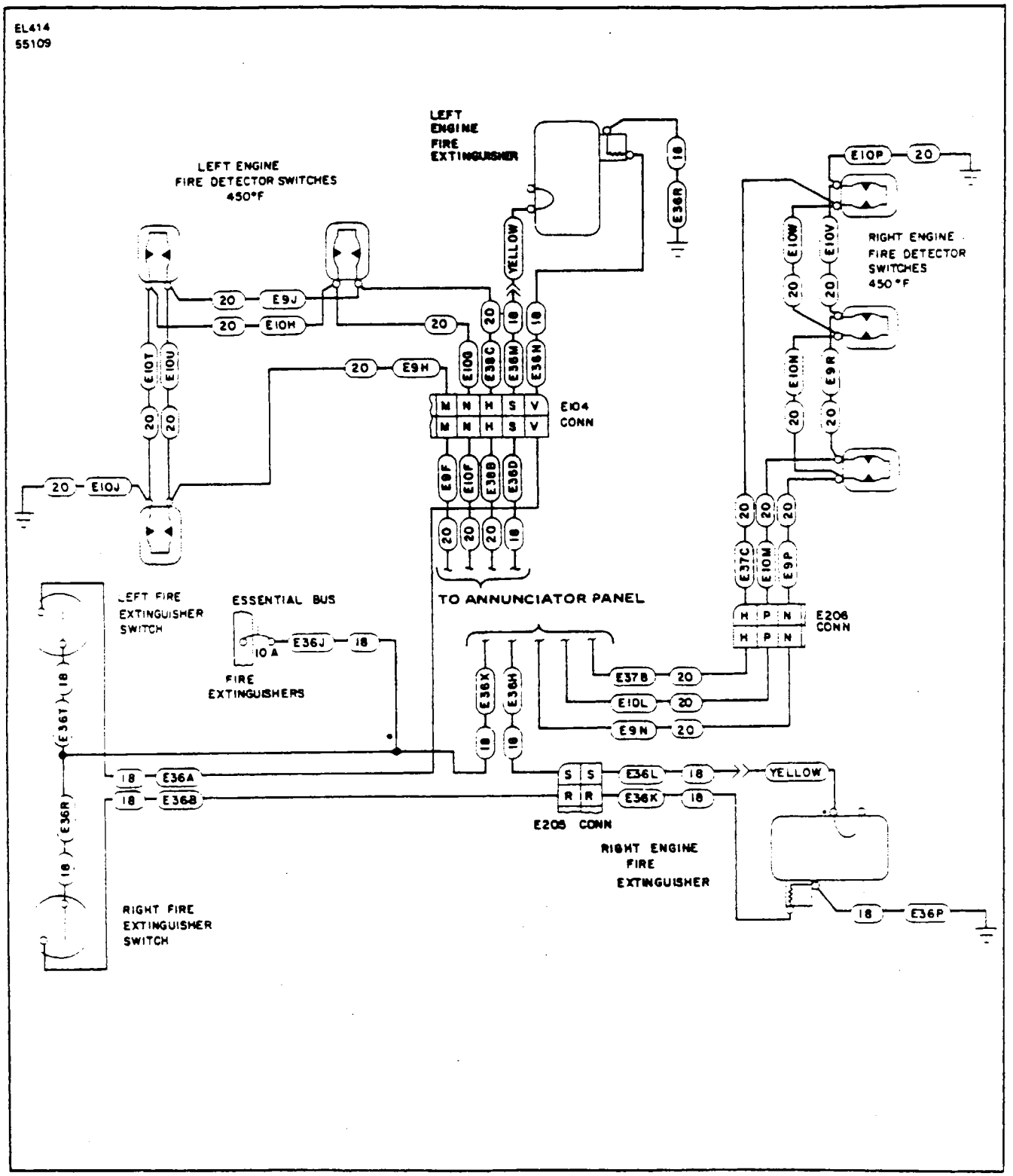

Figure 15-34 Fire Extinguishers.
PA-31T S/N 31T-7720008 to -7720069

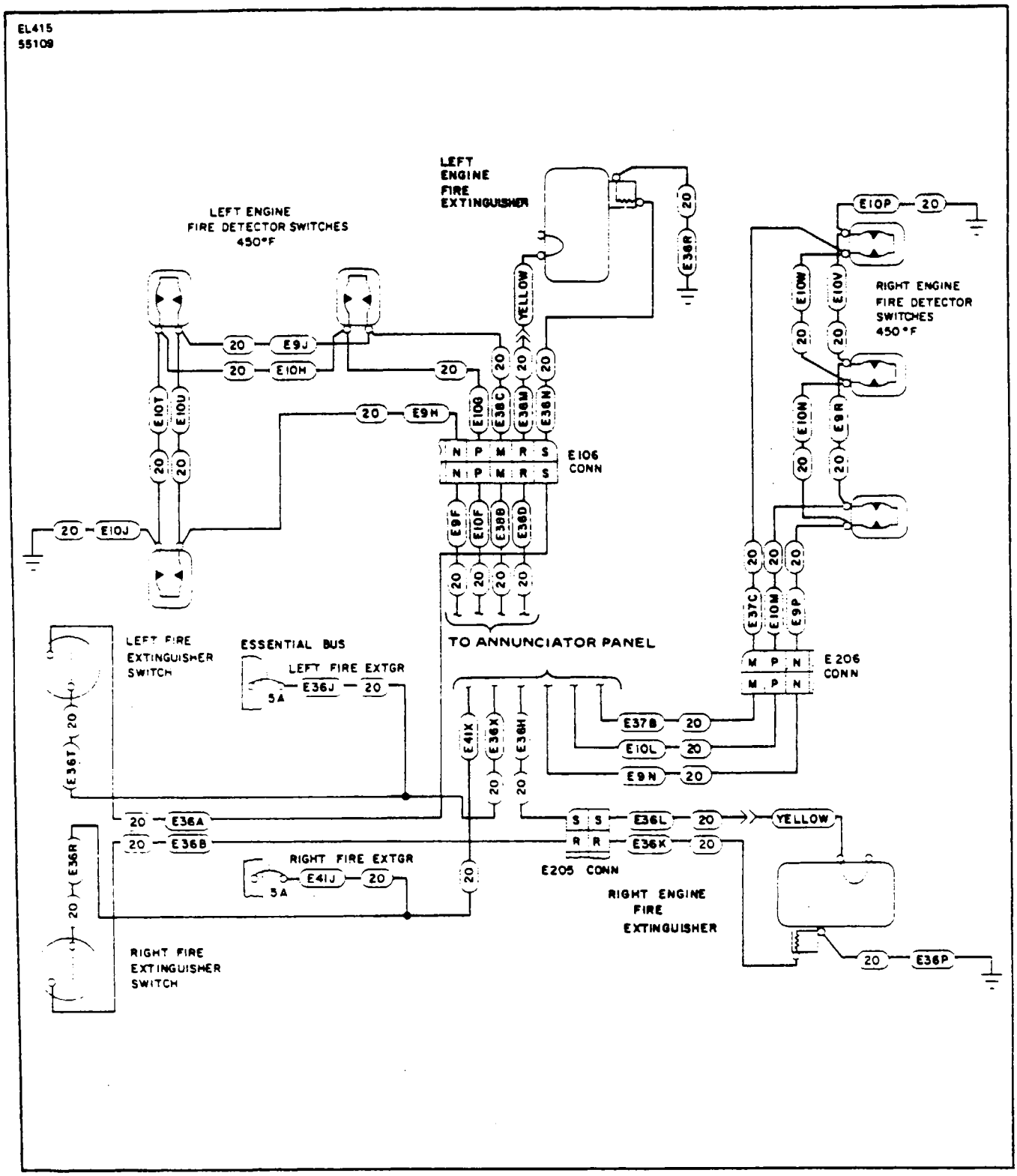

Figure 15-35 Fire Extinguishers,
PA-31T S/N 31T-7820001 to -8020092 and PA-31T1 S/N 31T-7804001 to -8004057

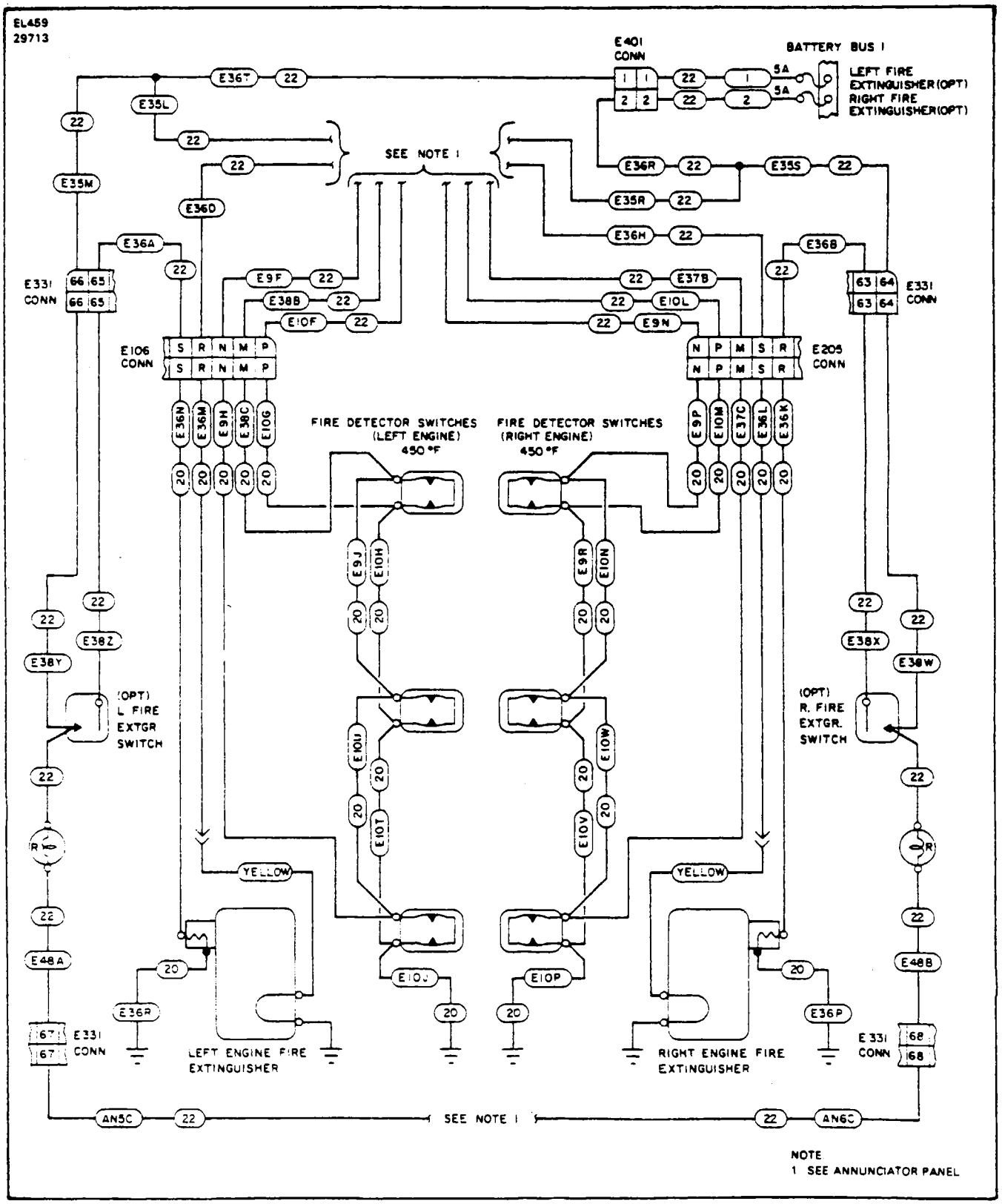

Figure 15-36. Fire Extinguishers,
PA-31T S. N 31T-8120001 and up and PA-31T1 S. N 31T-8104001 and up

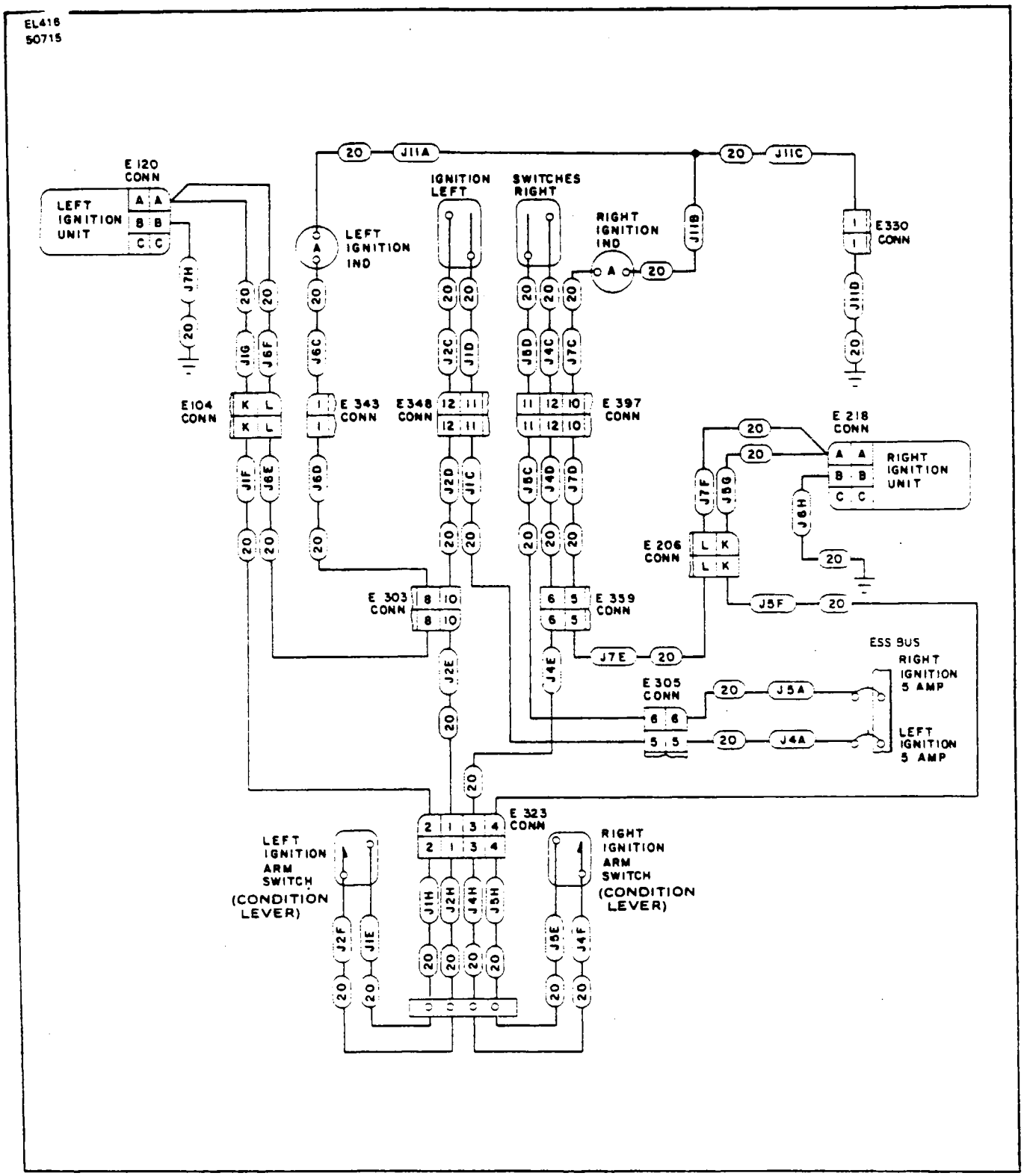

Figure 15-37. Ignition; Right and Left, PA-31T S/N 31T-7400002 to -7720007

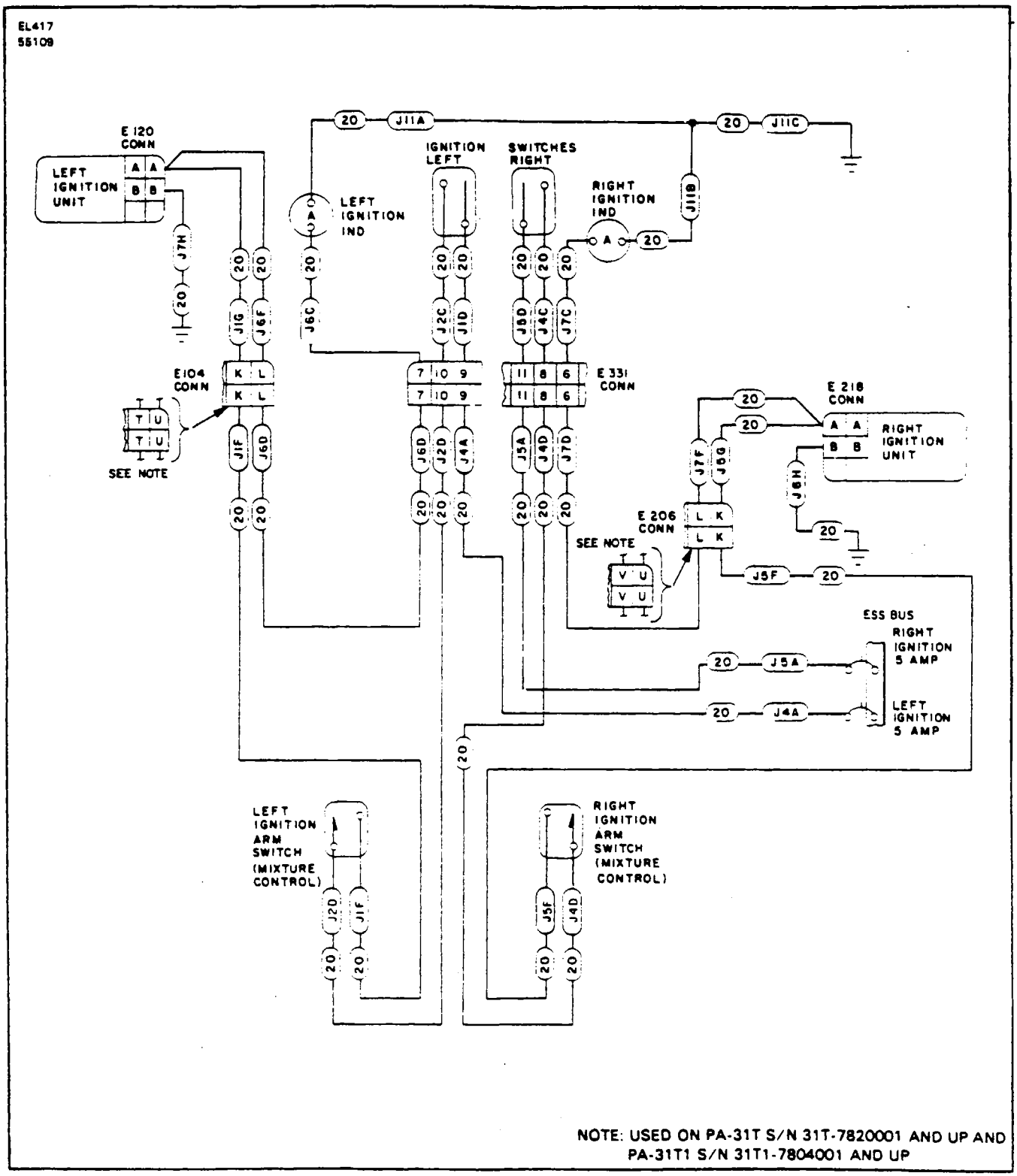

Figure 15-38. Ignition: Right and Left.
PA-31T S/N 31T-7720008 to -8020092 and PA-31T1 S/N 31T-7804001 to -8004057

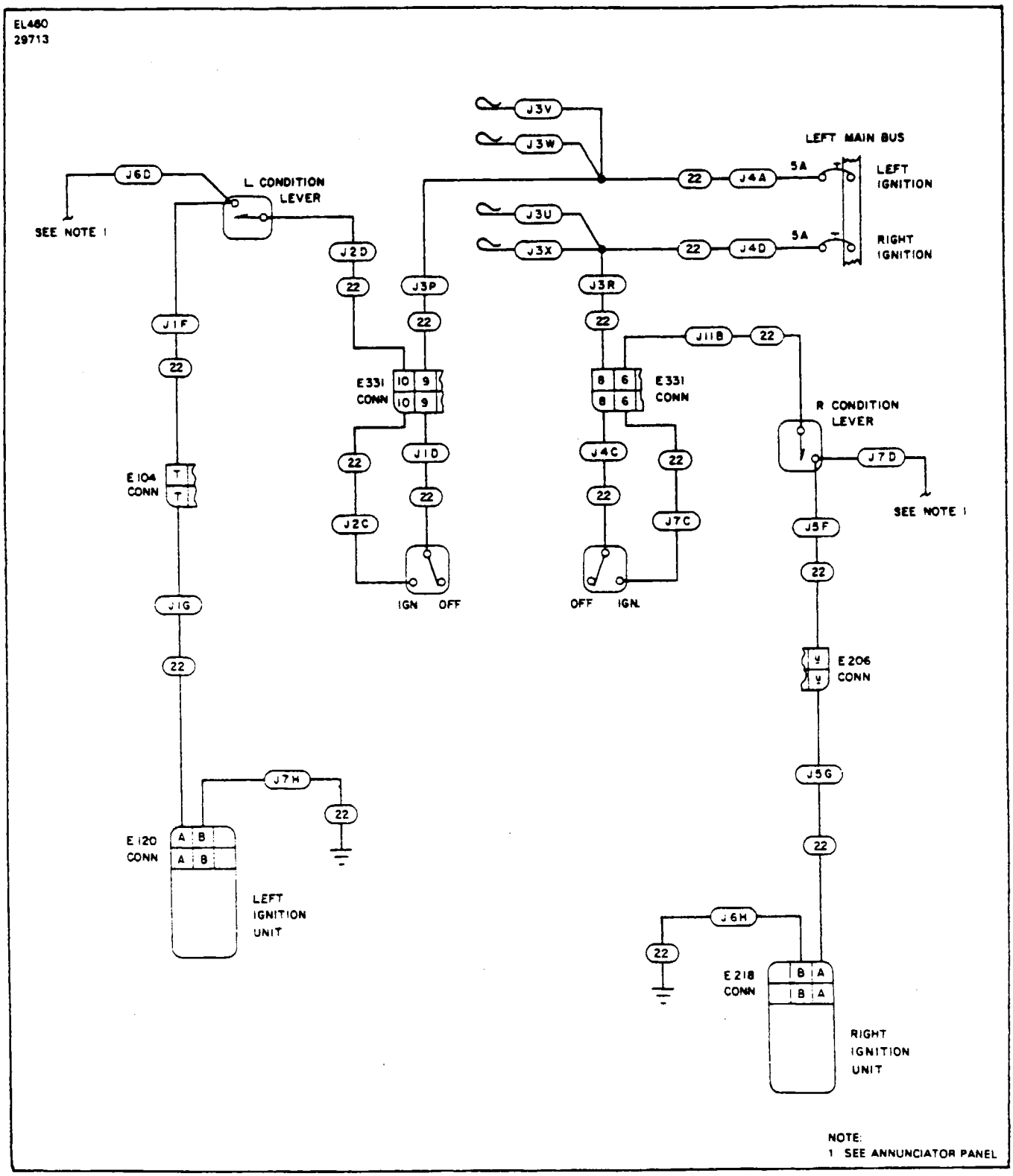

Figure 15-39. Ignition; Right and Left,
PA-31T S/N 31T-8120001 and up and PA-31T1 S/N 31T-8104001 and up

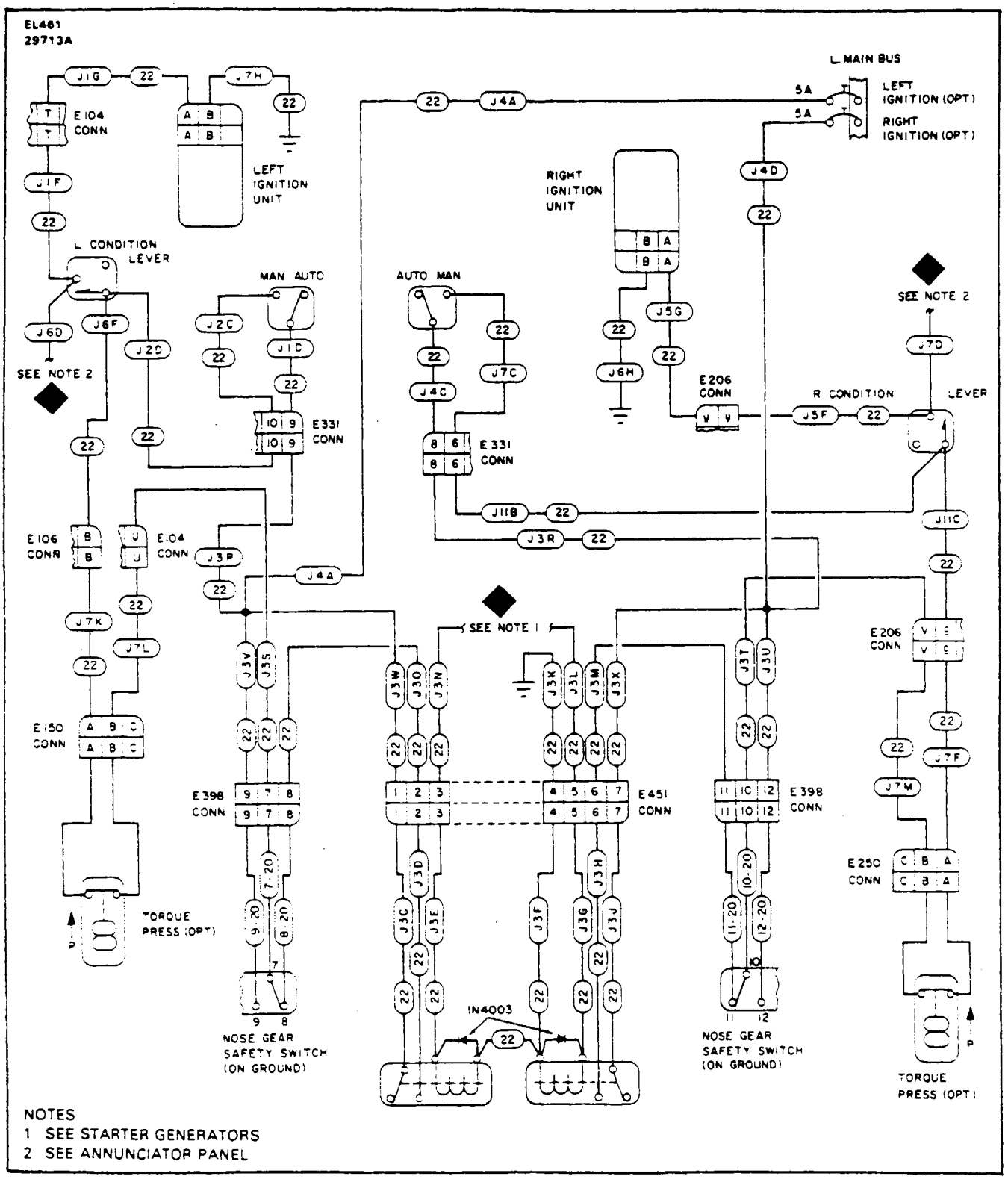

Figure 15-40. Ignition (Opt.): Right and Left.
PA-31T S/N 31T-8120001 and up and PA-31T1 S/N 31T-8104001 and up

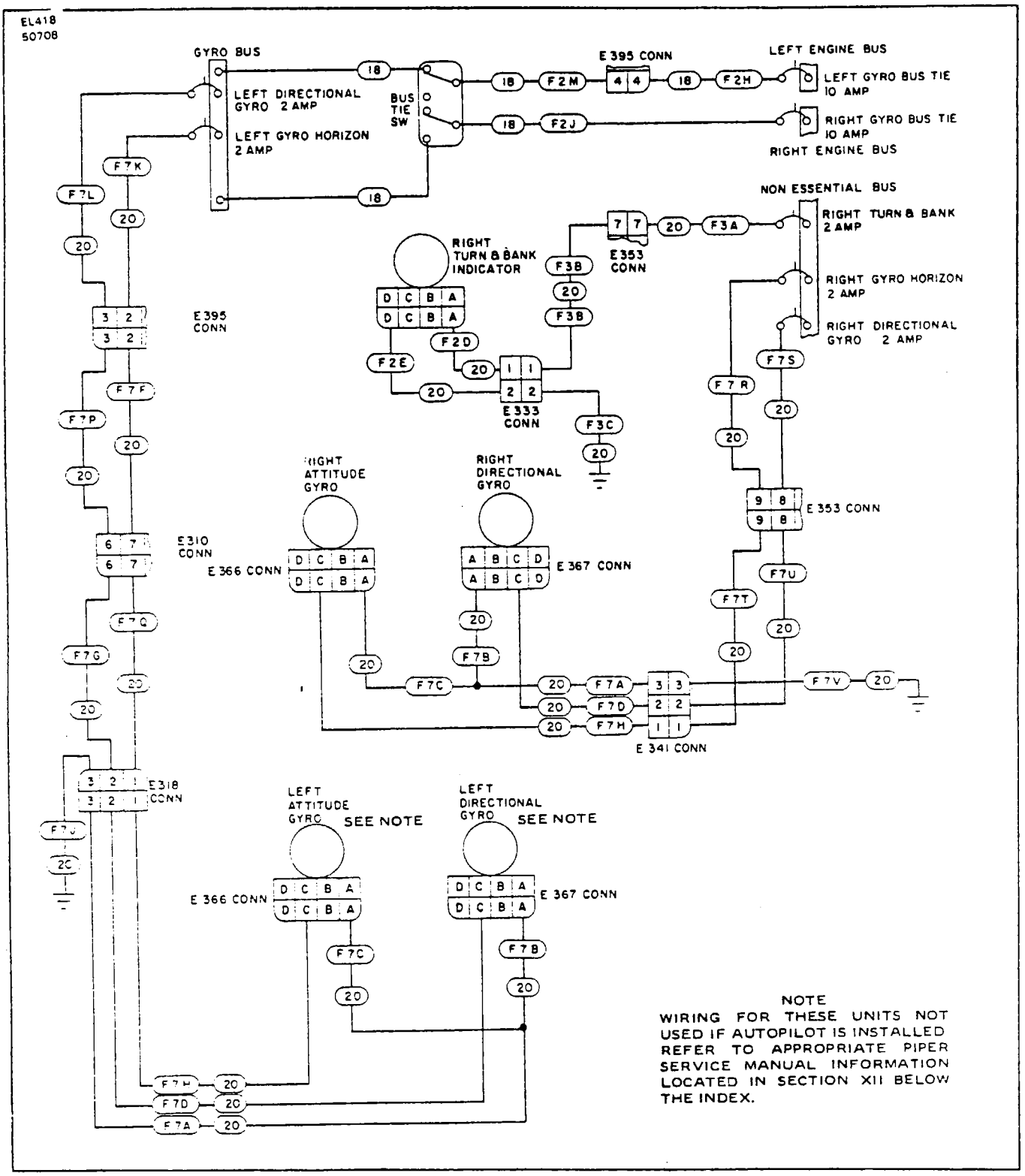

Figure 15-41 Attitude Gyro, Directional Gyro and Turn and Bank; Right and Left.
PA-31T S/N 31T-7400002 to -7720007

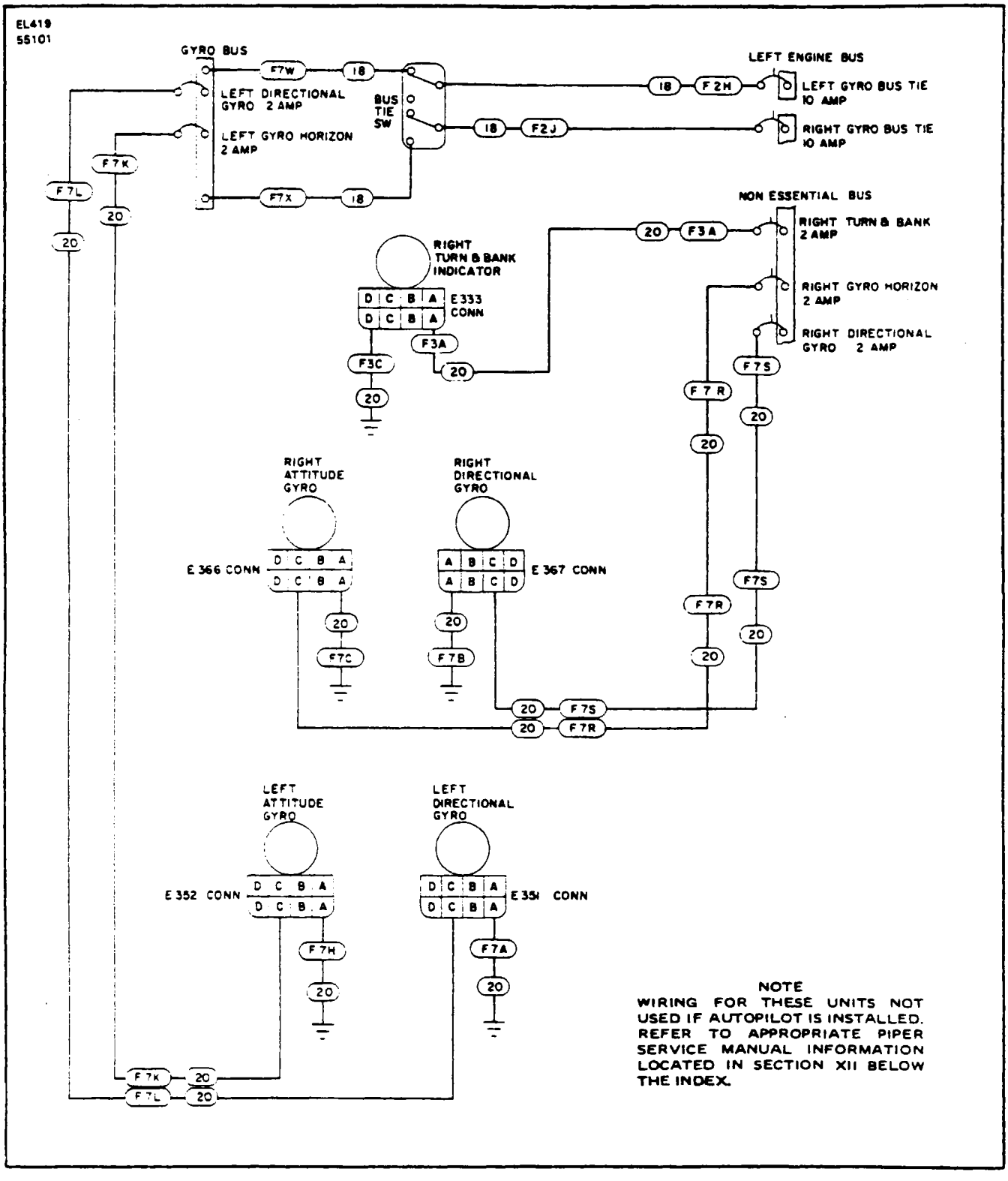

Figure 15-42. Attitude Gyro, Directional Gyro and Turn and Bank: Right and Left. PA-31T S/N 31T-7720008 to -8020092 and PA-31T1 S/N 31T-7804001 to -8004057

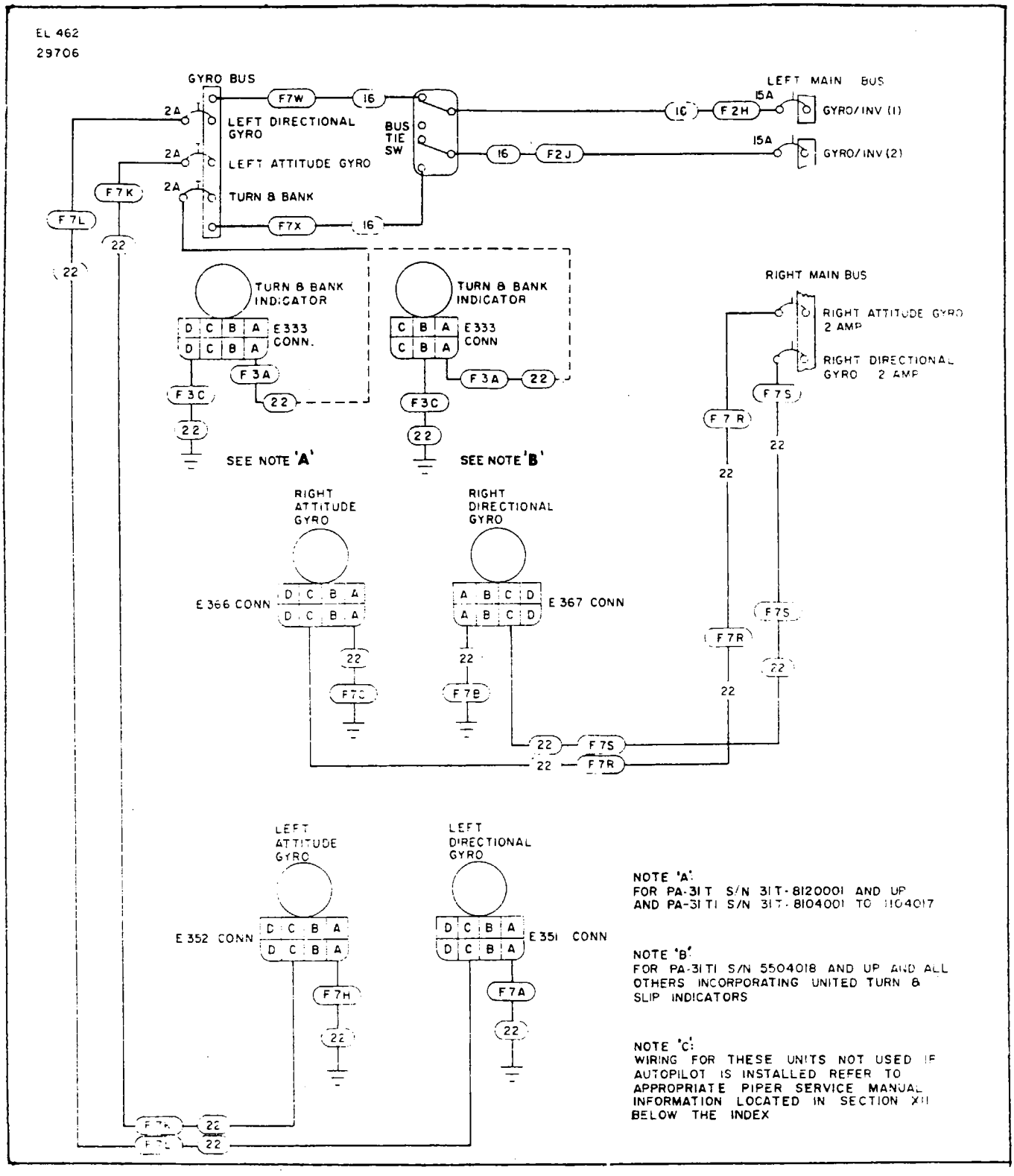

Figure 15-43 Attitude Gyro, Directional Gyro and Turn and Bank; Right and Left. PA-31T S/N 31T-8120001 and up and PA-31TI S/N 31T-8104001 and up

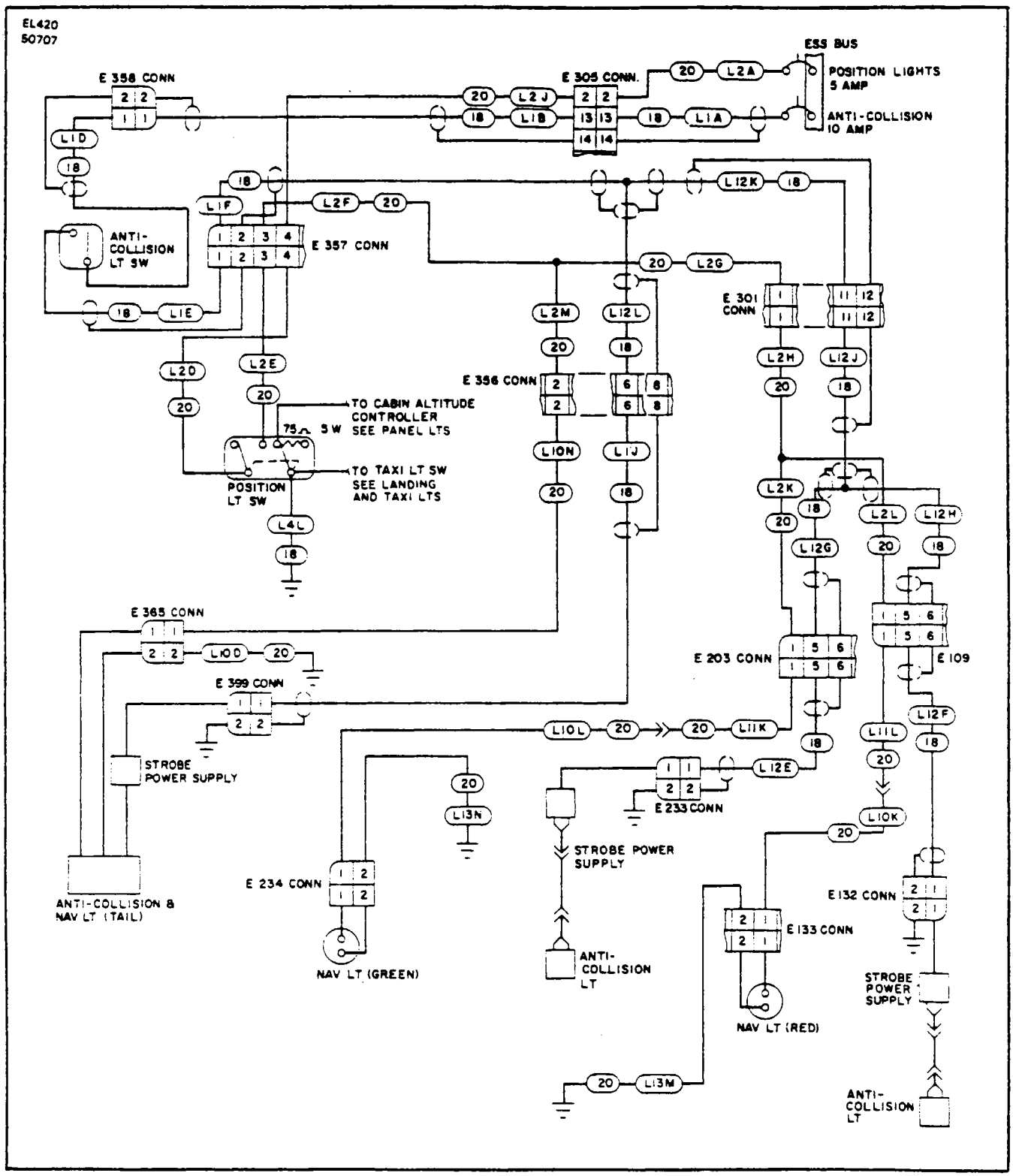

Figure 15-44. Position and Strobe Lights, PA-31T S/N 31T-7400002 to -7720007

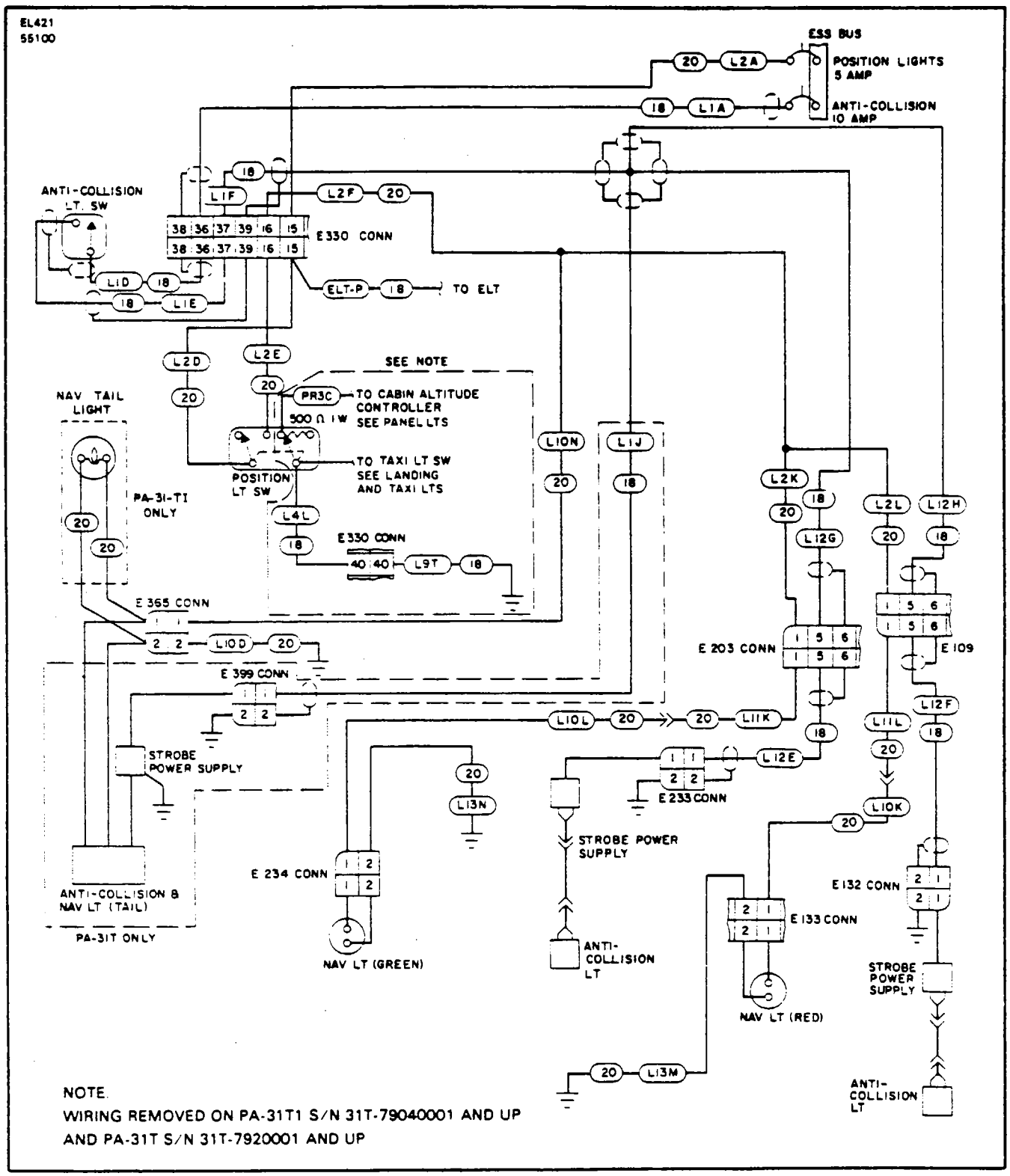

Figure 15-45. Position and Strobe Lights,
PA-31T S/N 31T-7720008 to -8020092 and PA-31T1 S/N 31T-7804001 to -8004057

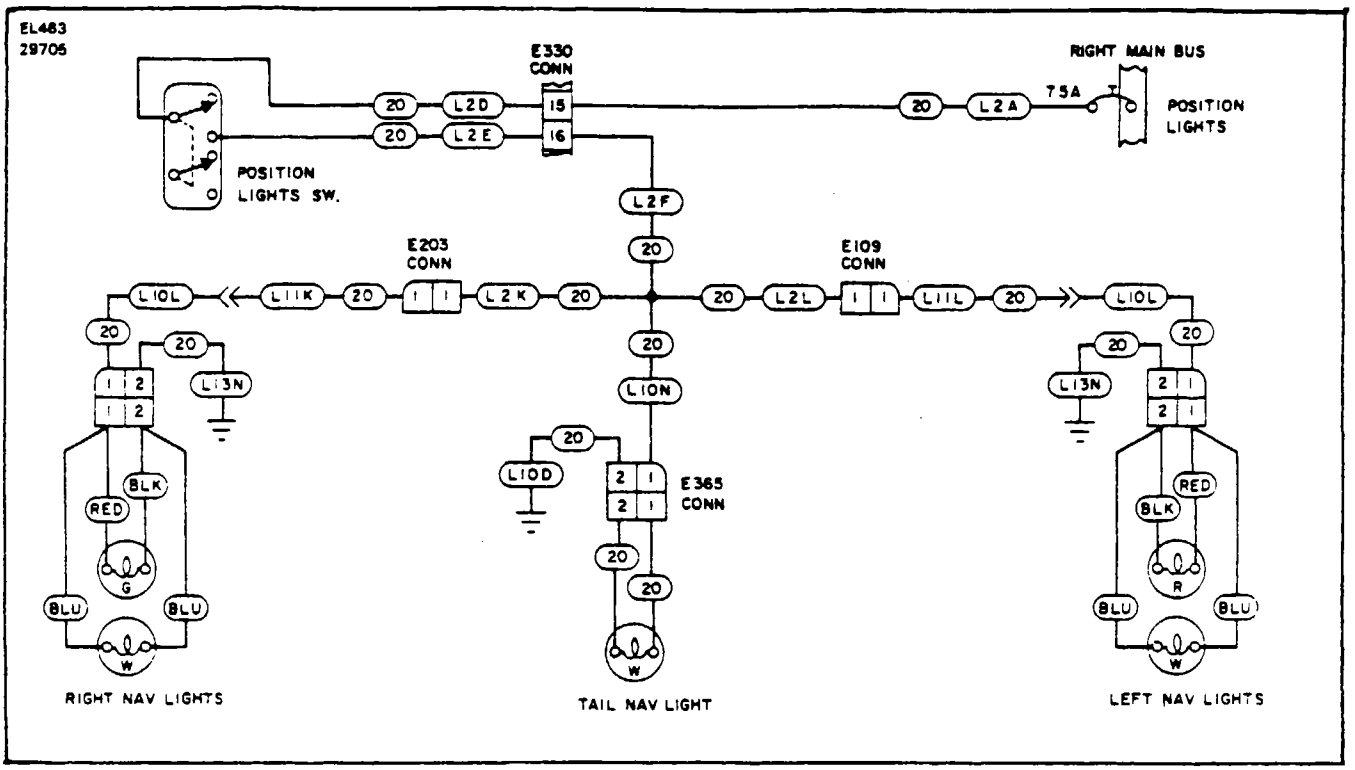

Figure 15-46. Position Lights,
PA-31T S/N 31T-8120001 and up and PA-31T1 S/N 31T-8104001 and up

INTENTIONALLY LEFT BLANK

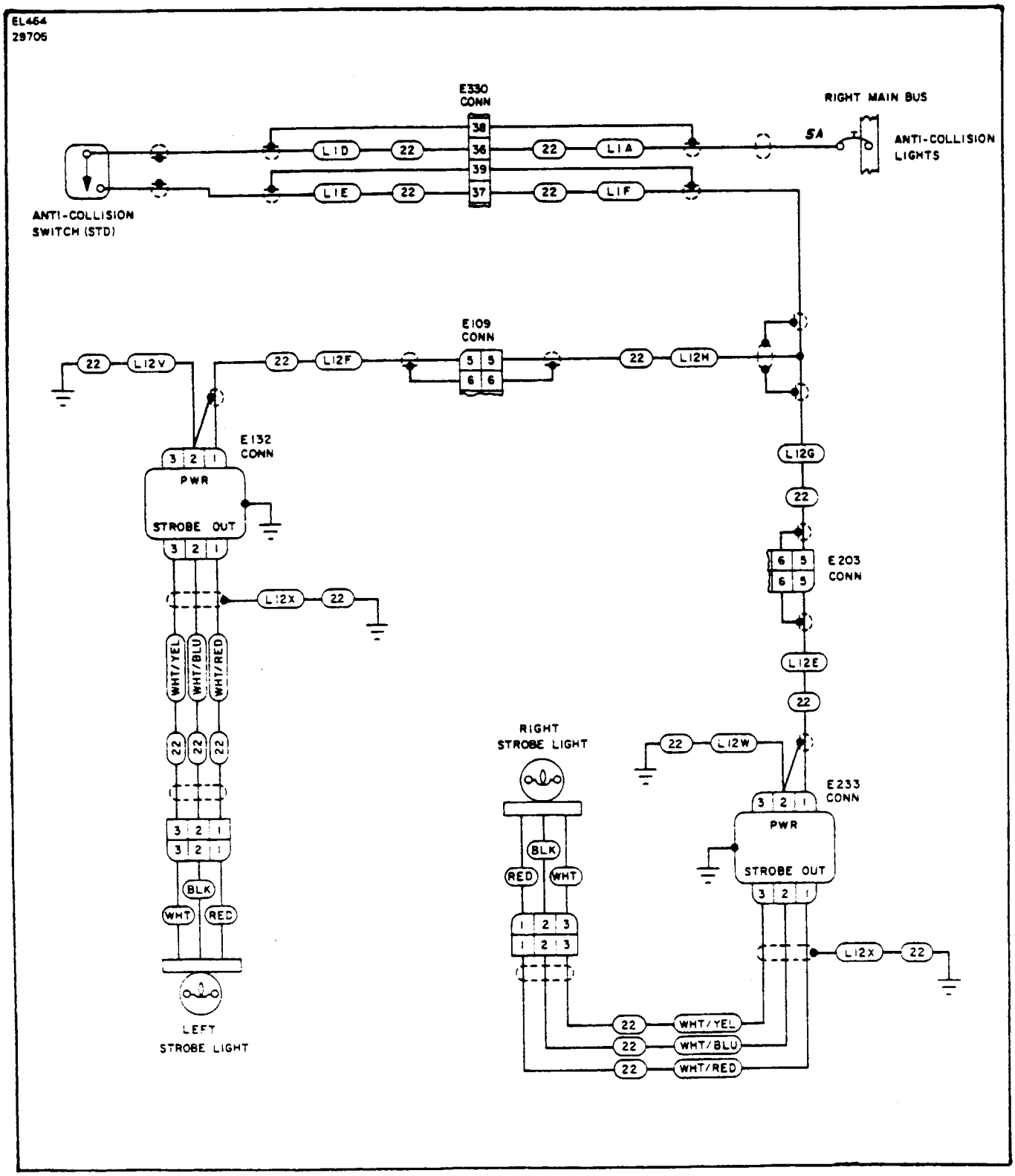

Figure 15-47. Anti-Collision Lights.
PA-31T S/N 31T-8120001 and up and PA-31T1 S/N 31T-8104001 and up

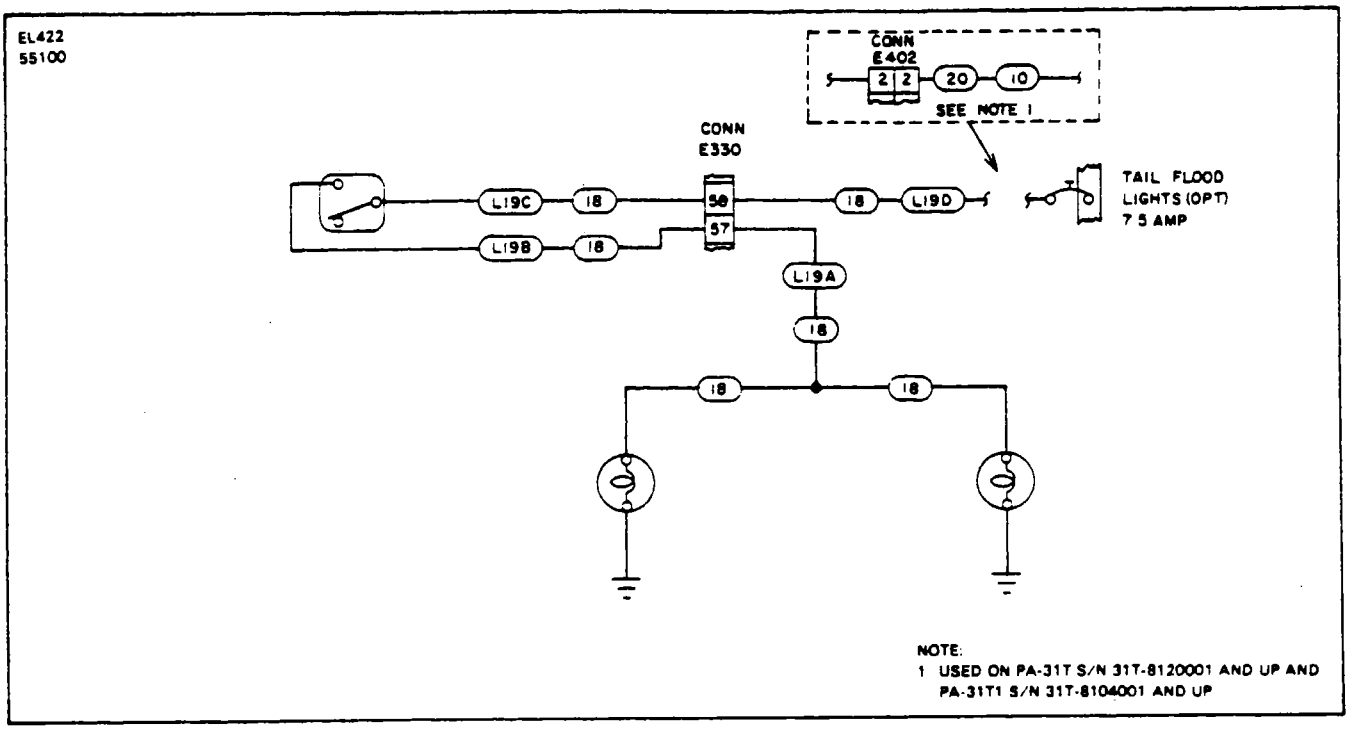

Figure 15-48. Tail Flood Lights,
PA-31T S/N 31T-8020001 and up and PA-31T1 S/N 31T-8004001 and up

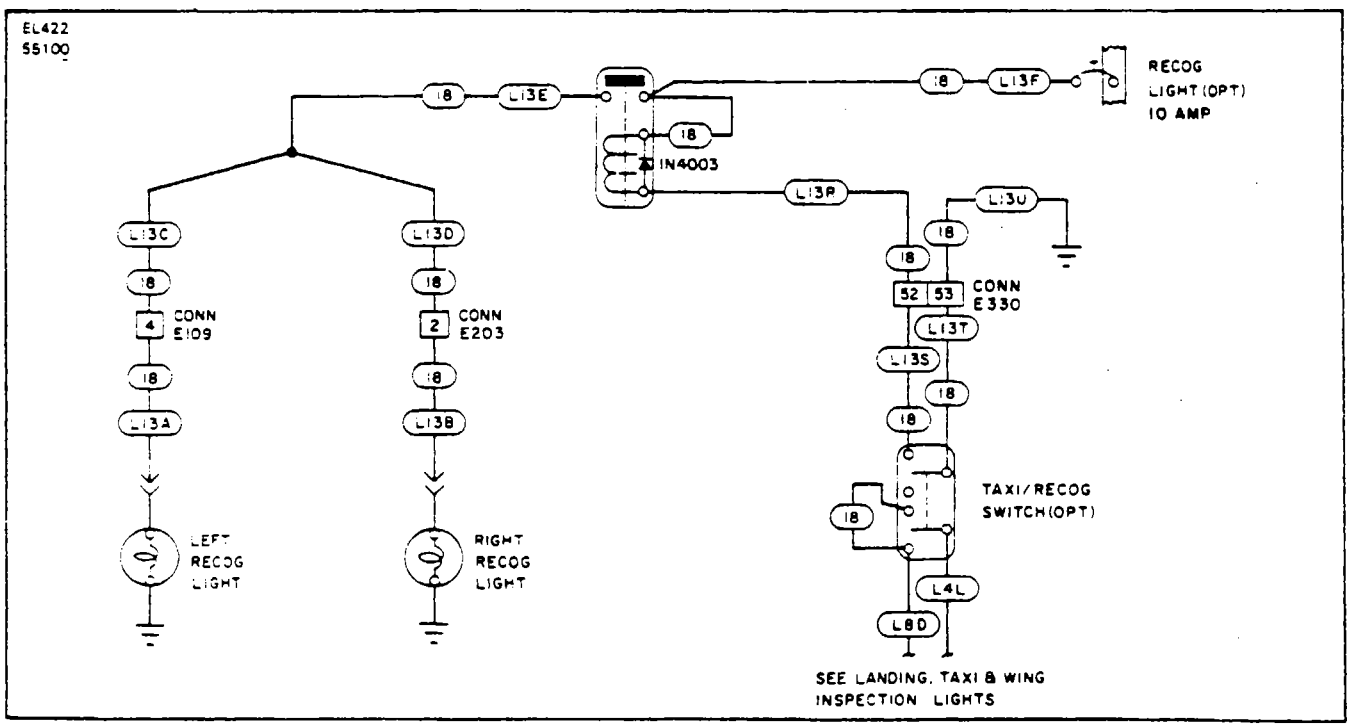

Figure 15-49. Recognition Lights,
PA-31T S/N 31T-8020001 and up and PA-31T1 S/N 31T-8004001 and up

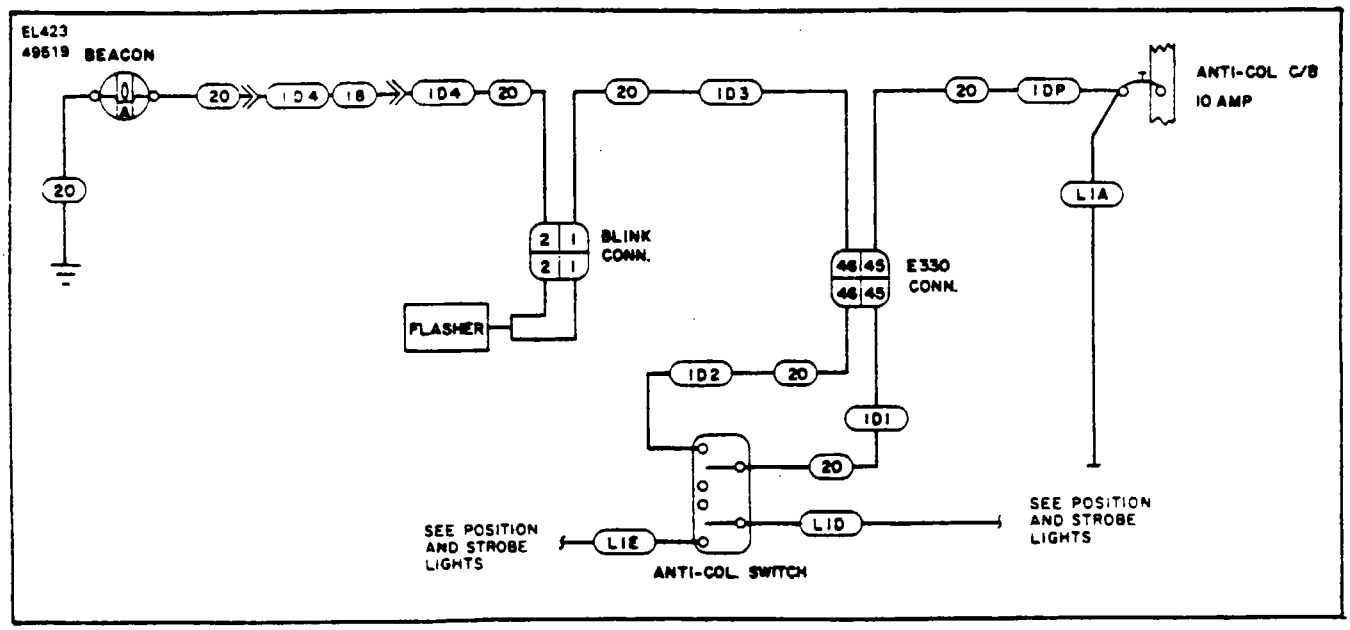

Figure 15-50. Anti-Collision Beacon.
PA-31T S/N 31T-7920021 to -8020092 and PA-31T1 S/N 31T-7904006 to -8004057

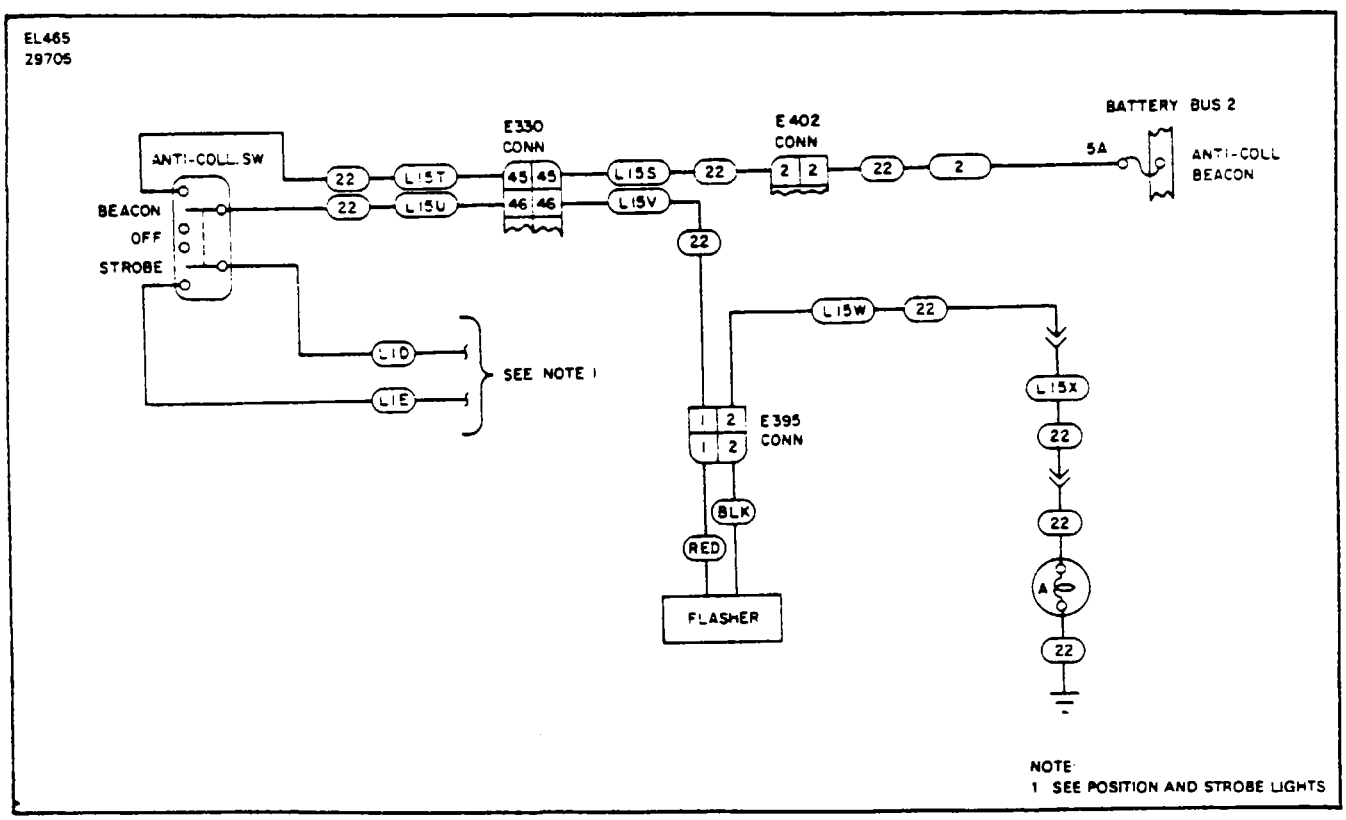

Figure 15-51 Anti-Collision Beacon.
PA-31T S/N 31T-81200001 and up and PA-31T1 S/N 31T-8104001 and up

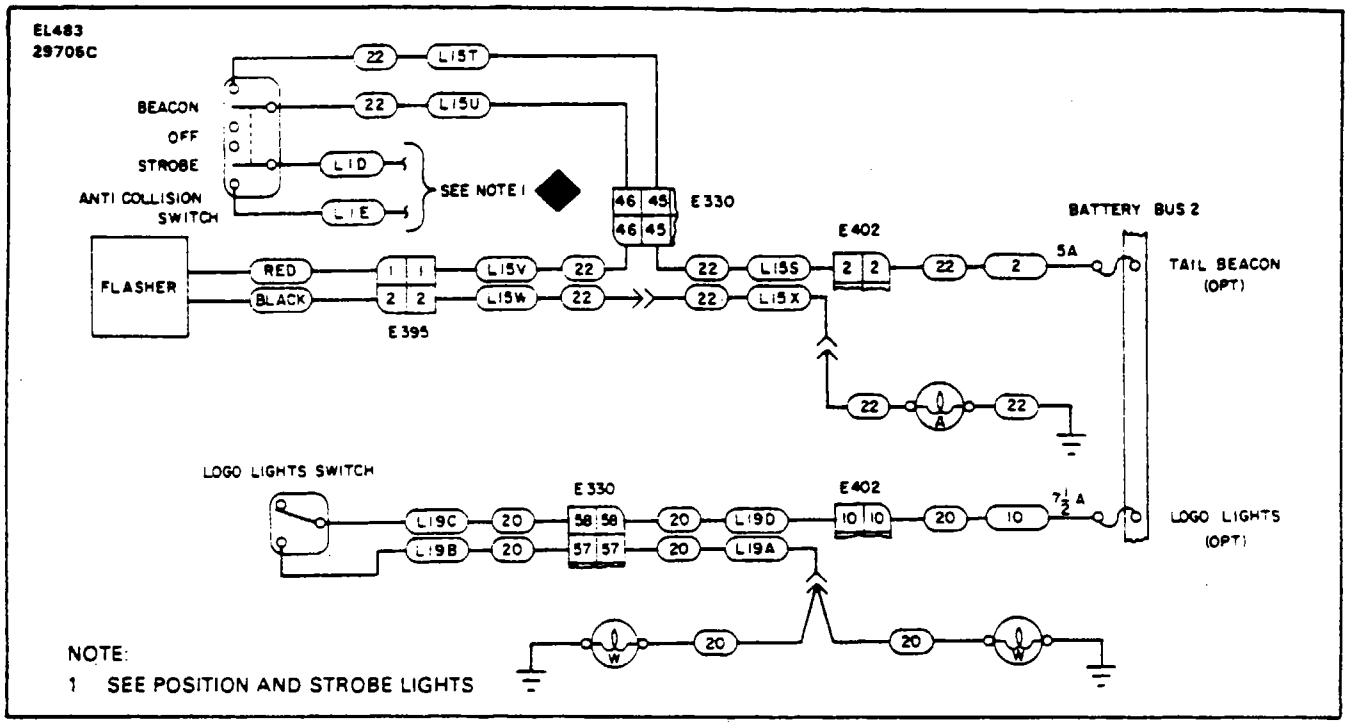

Figure 15-51a. Ground Recognition Beacon, Logo Lights PA-31T S/N 31T-8120001 and up and PA-31T1 S/N 31T-8104001 and up

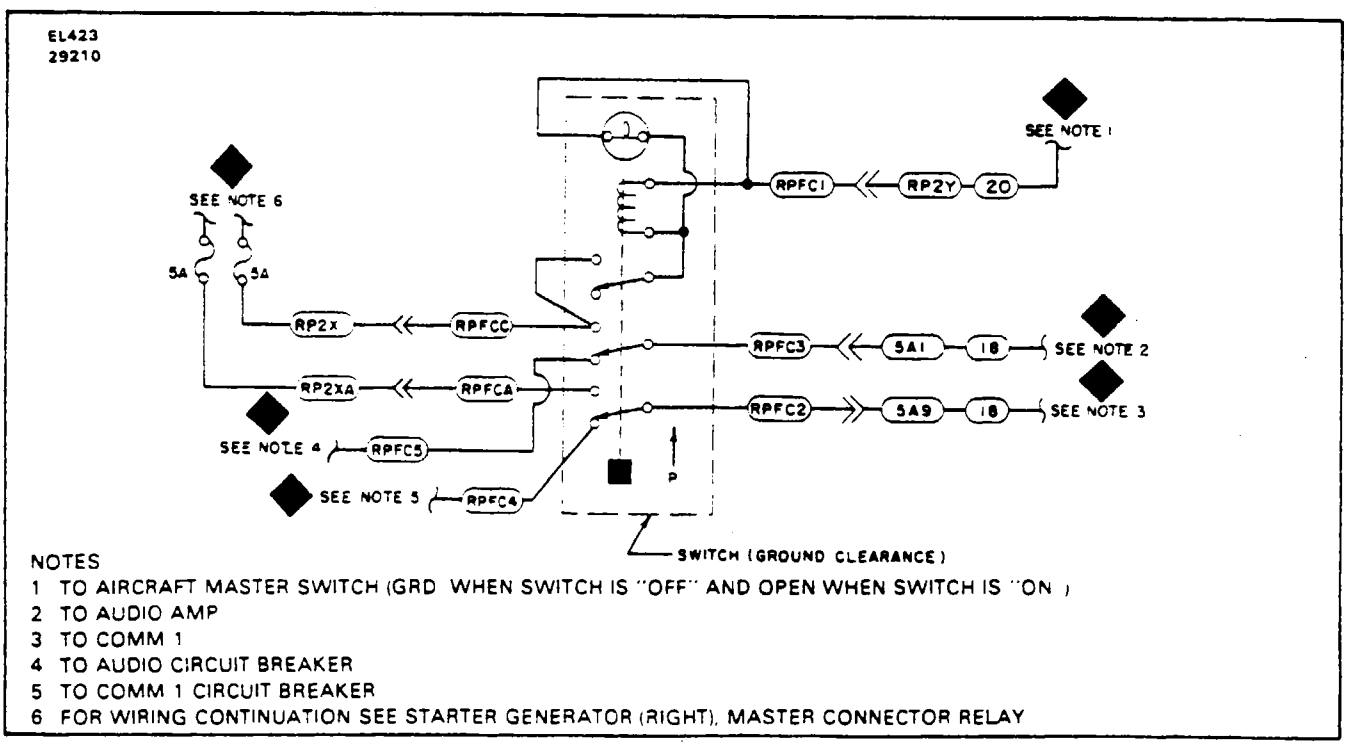

Figure 15-52. Ground Clearance Switch

THIS PAGE INTENTIONALLY LEFT BLANK

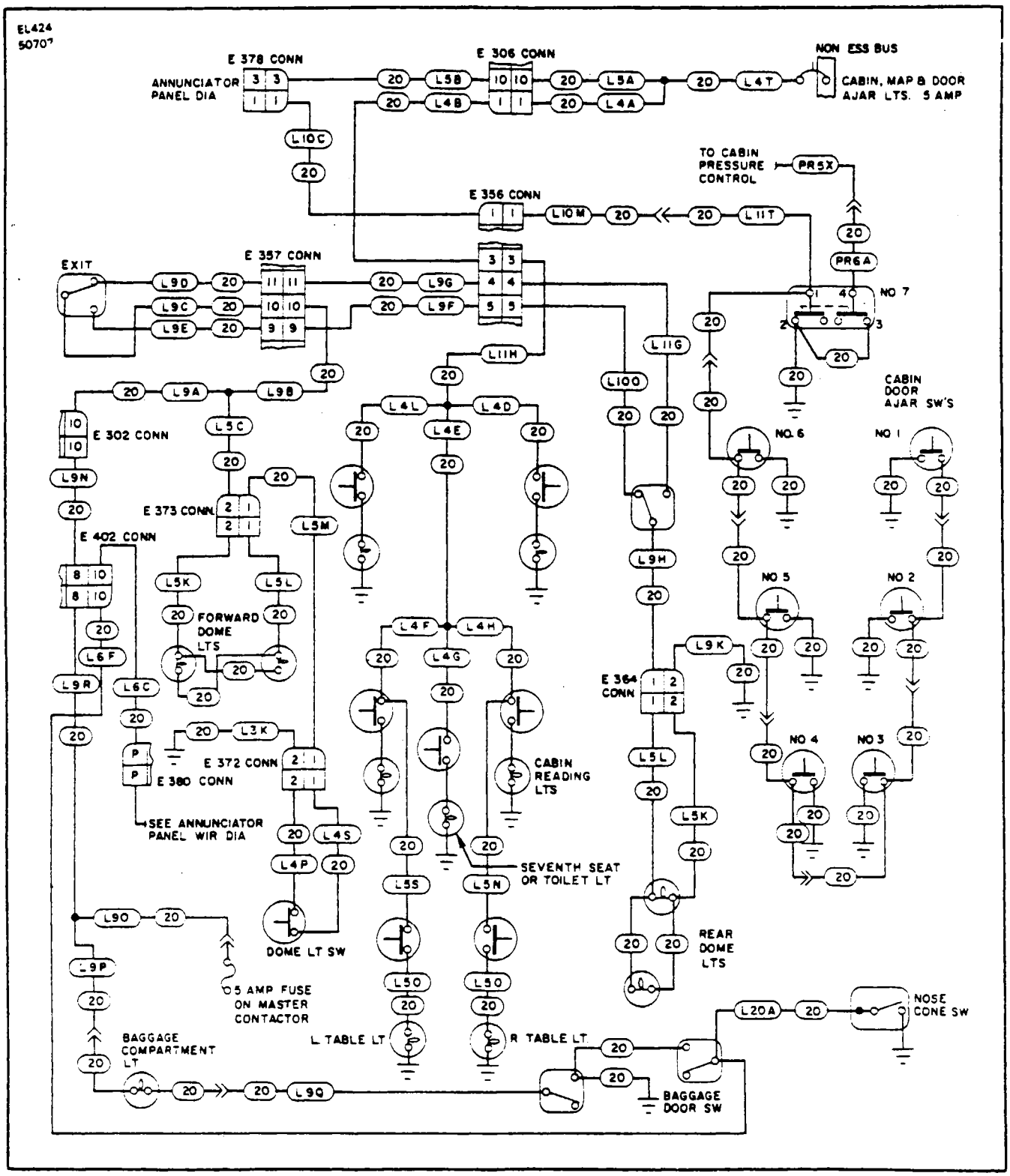

Figure 15-53. Baggage, Dome, Map, Ajar, Toilet and Reading Lights, PA-31T S/N 31T-7400002 to -7520043

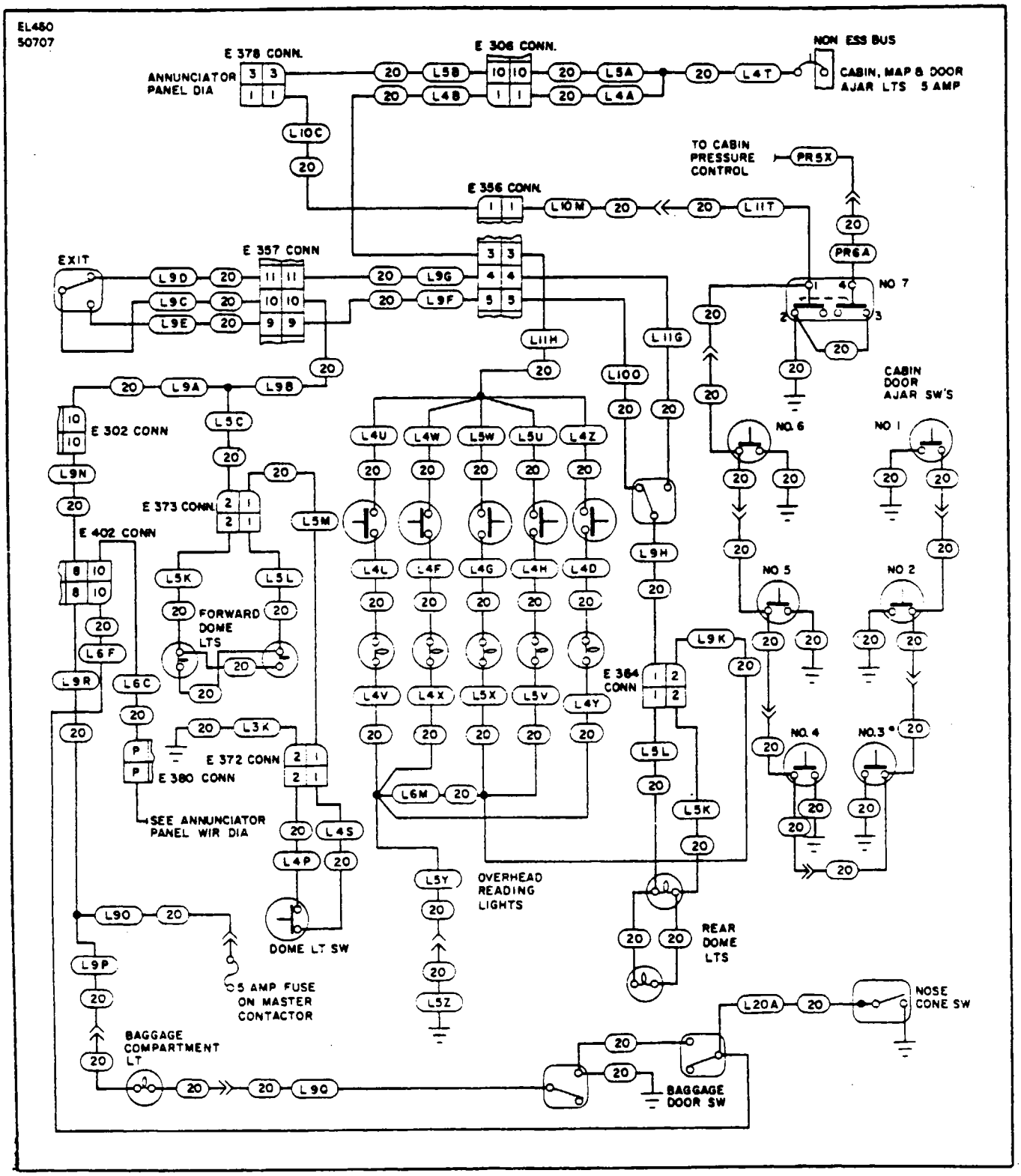

Figure 15-54. Baggage, Dome, Ajar and Reading Lights, PA-31T S/N 31T-7620001 to -7720007

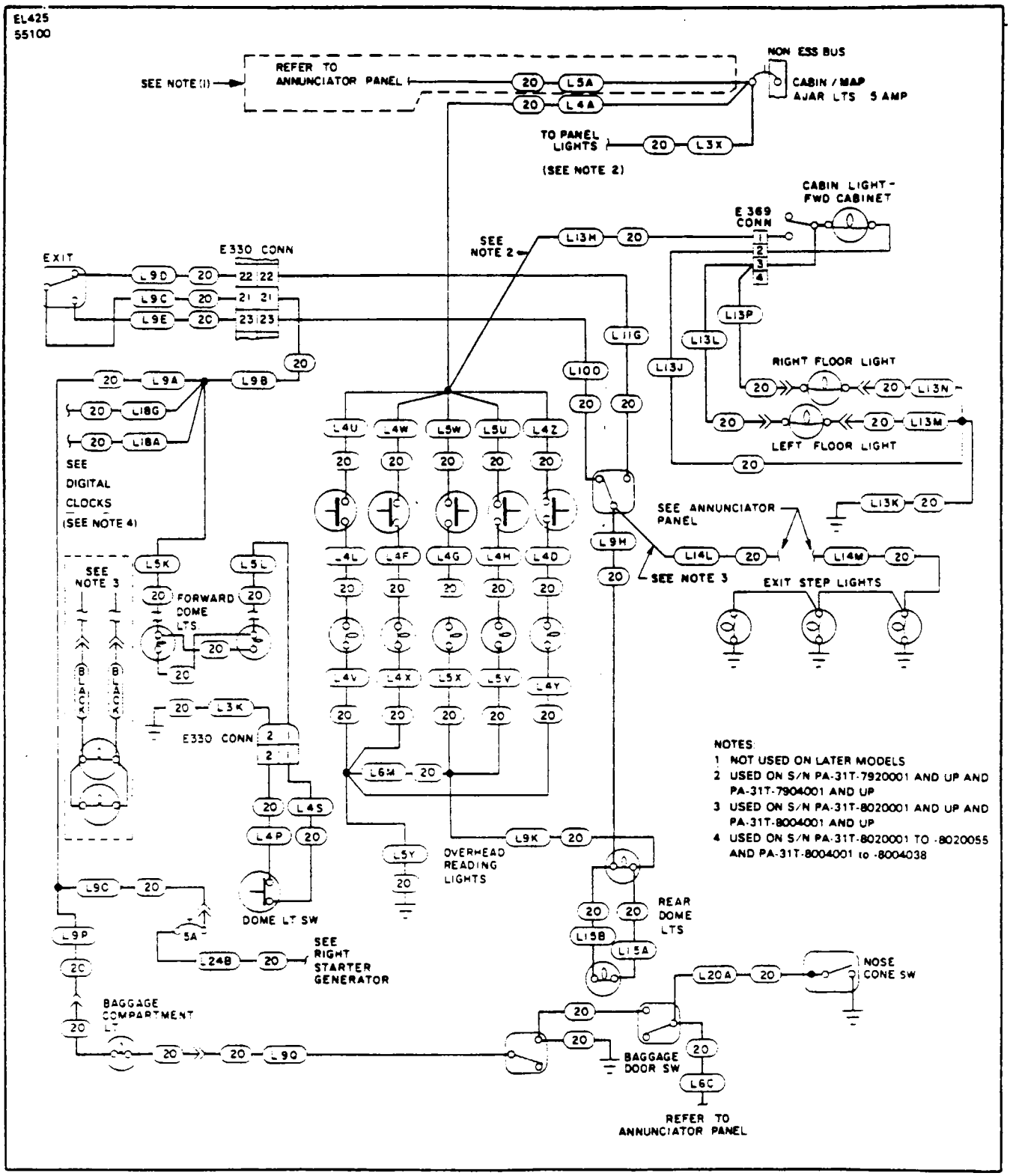

Figure 15-55. Baggage, Dome, Ajar, Floor, Exit and Reading Lights, PA-31T S/N 31T-7720008 to -8020092 and PA-31T1 S/N 31T-7804001 to -8004057

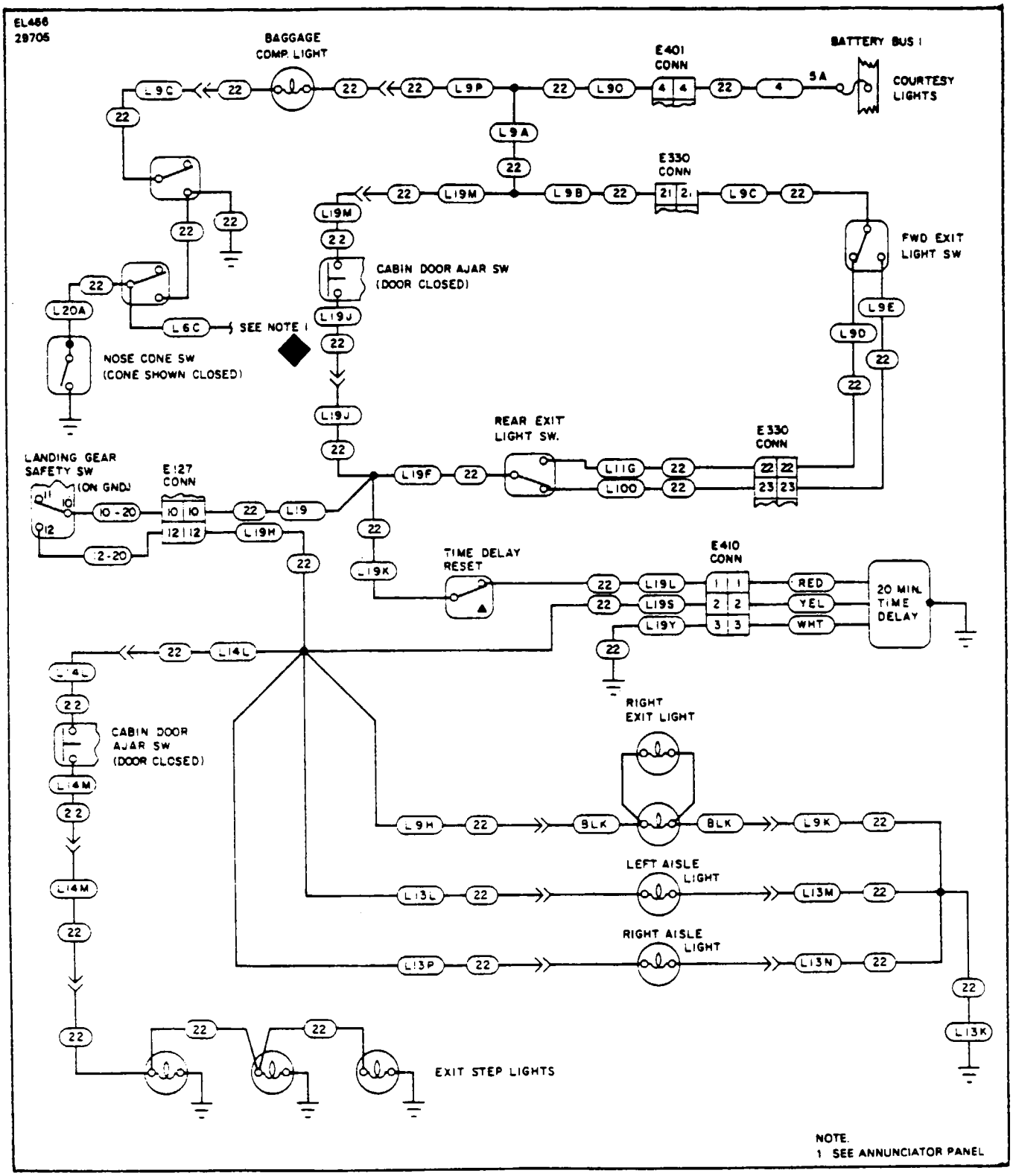

Figure 15-56 Baggage, Ajar, Aisle, Exit and Time Delay Lights, PA-31T S/N 31T-8120001 and up and PA-31T1 S/N 31T-8104001 and up

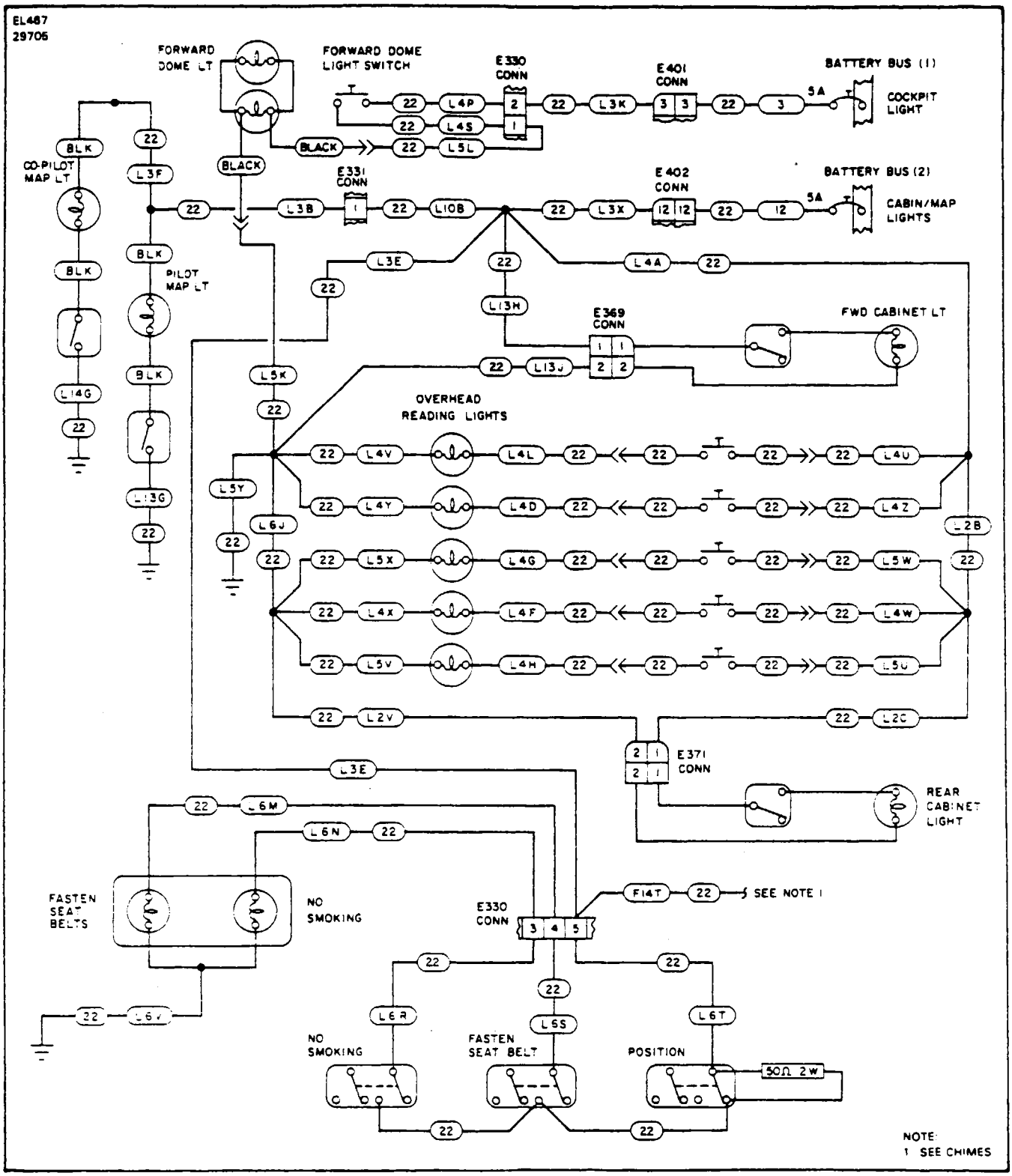

Figure 15-57. Dome, Map, Cabinet, Overhead, No Smoking and Seat Belt Lights, PA-31T S/N 31T-8120001 and up and PA-31T1 S/N 31T-8104001 and up

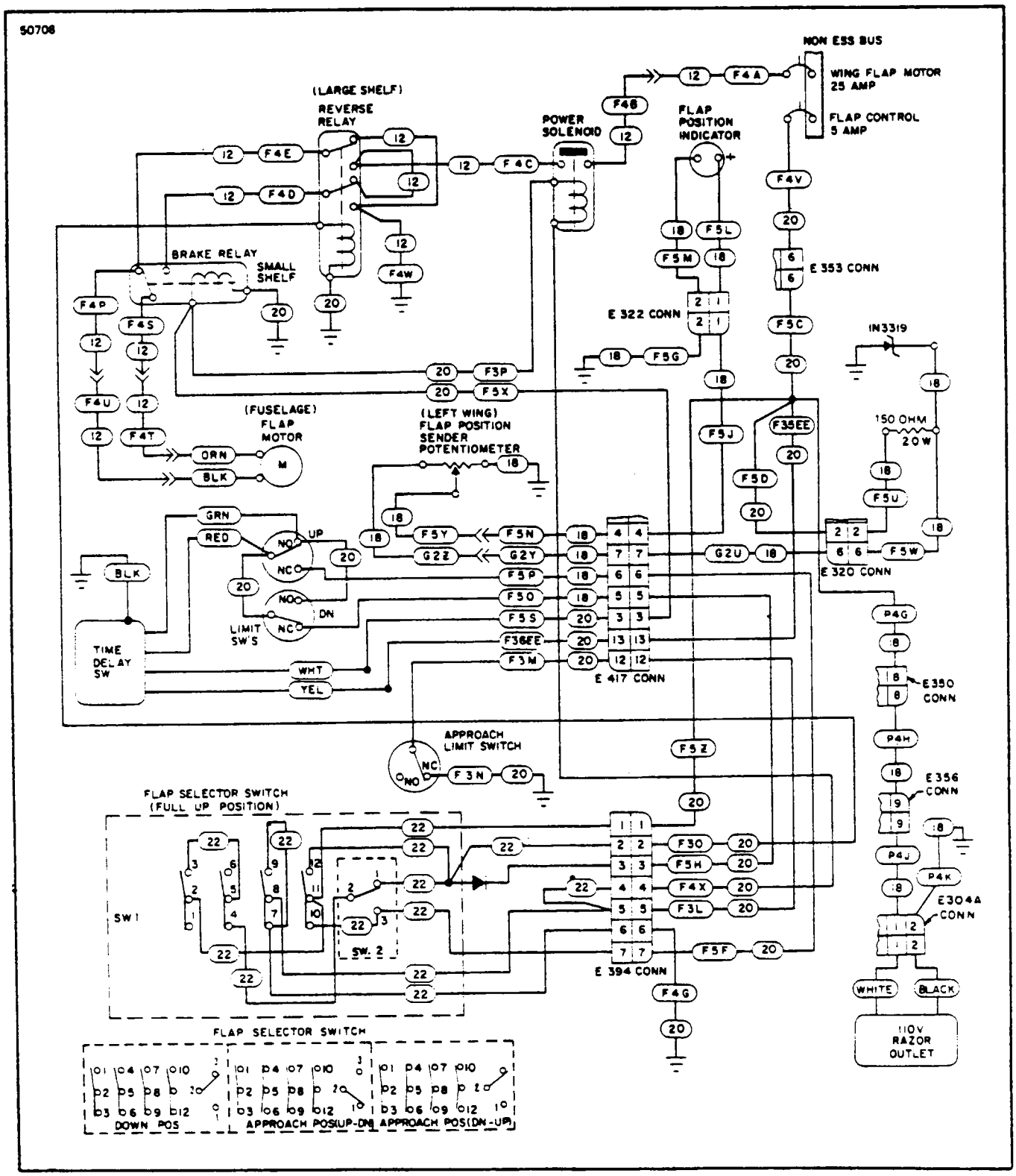

Figure 15-58. Wing Flap Motor and Control/Razor Outlet, PA-31T S/N 31T-7400002 to -7520008

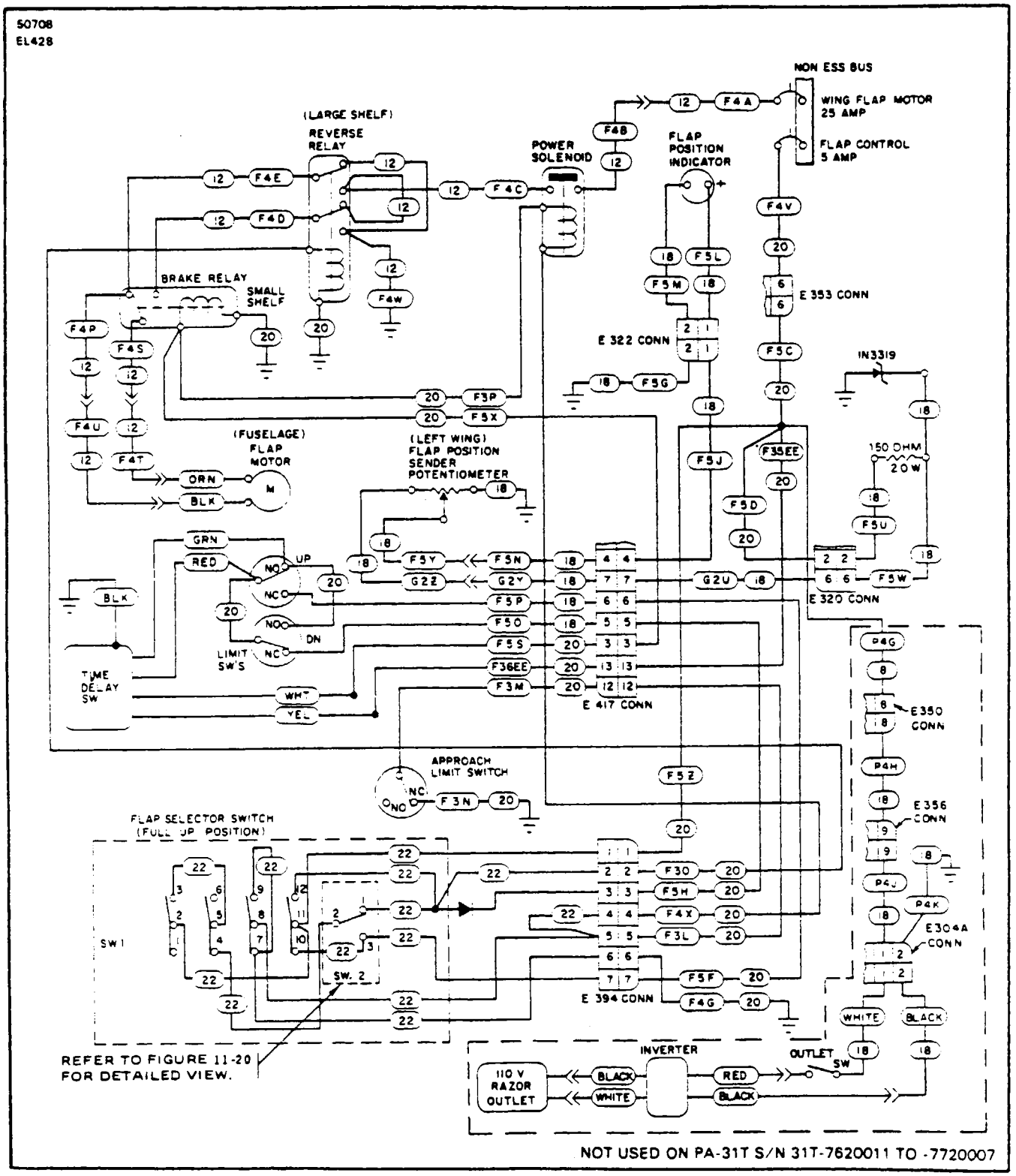

Figure 15-59. Wing Flap Motor and Control/Razor Outlet, PA-31T S/N 31T-7520009 to -7720007

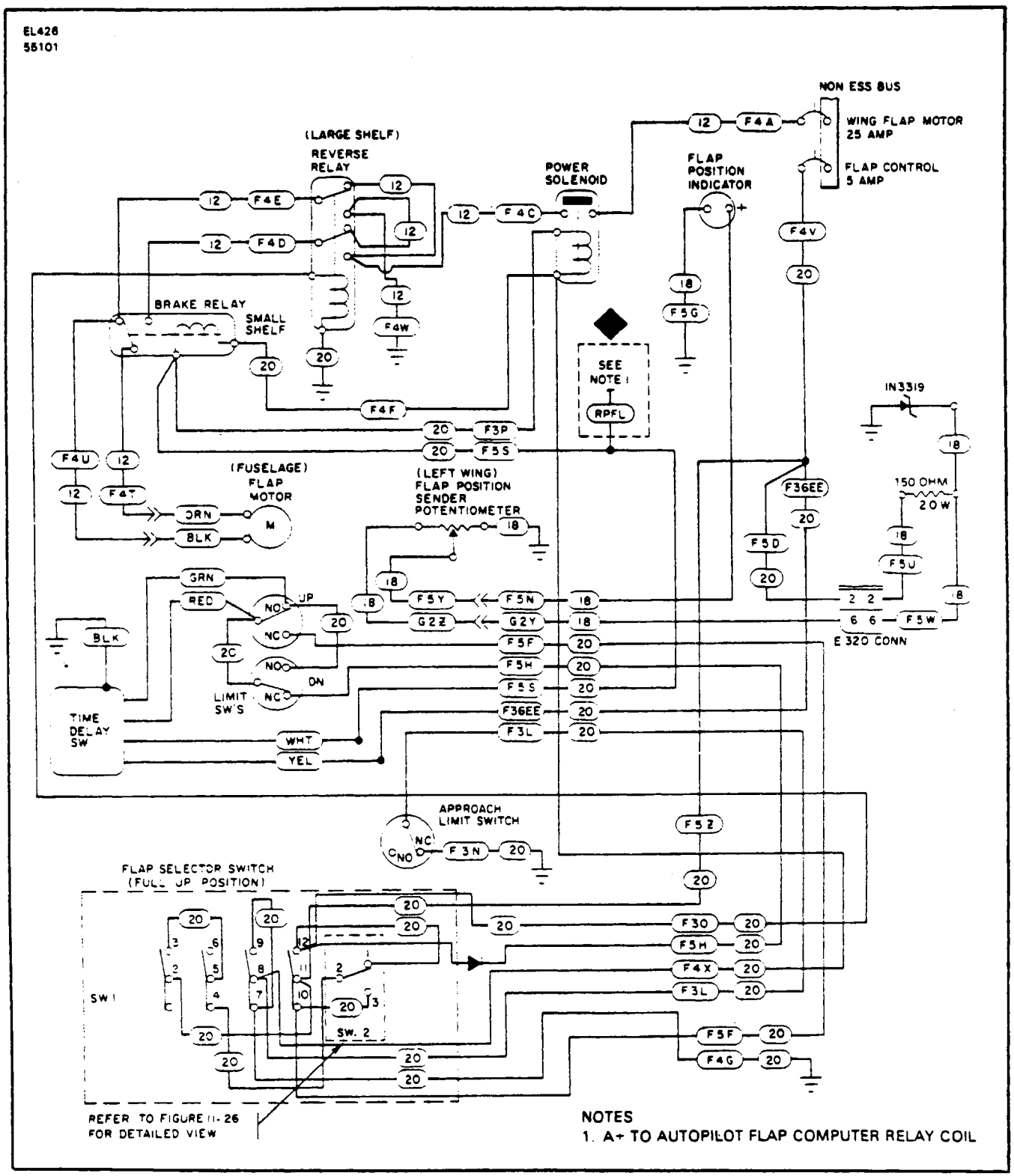

Figure 15-60. Wing Flap Motor and Control,
PA-31T S/N 31T-7720008 to -7720069

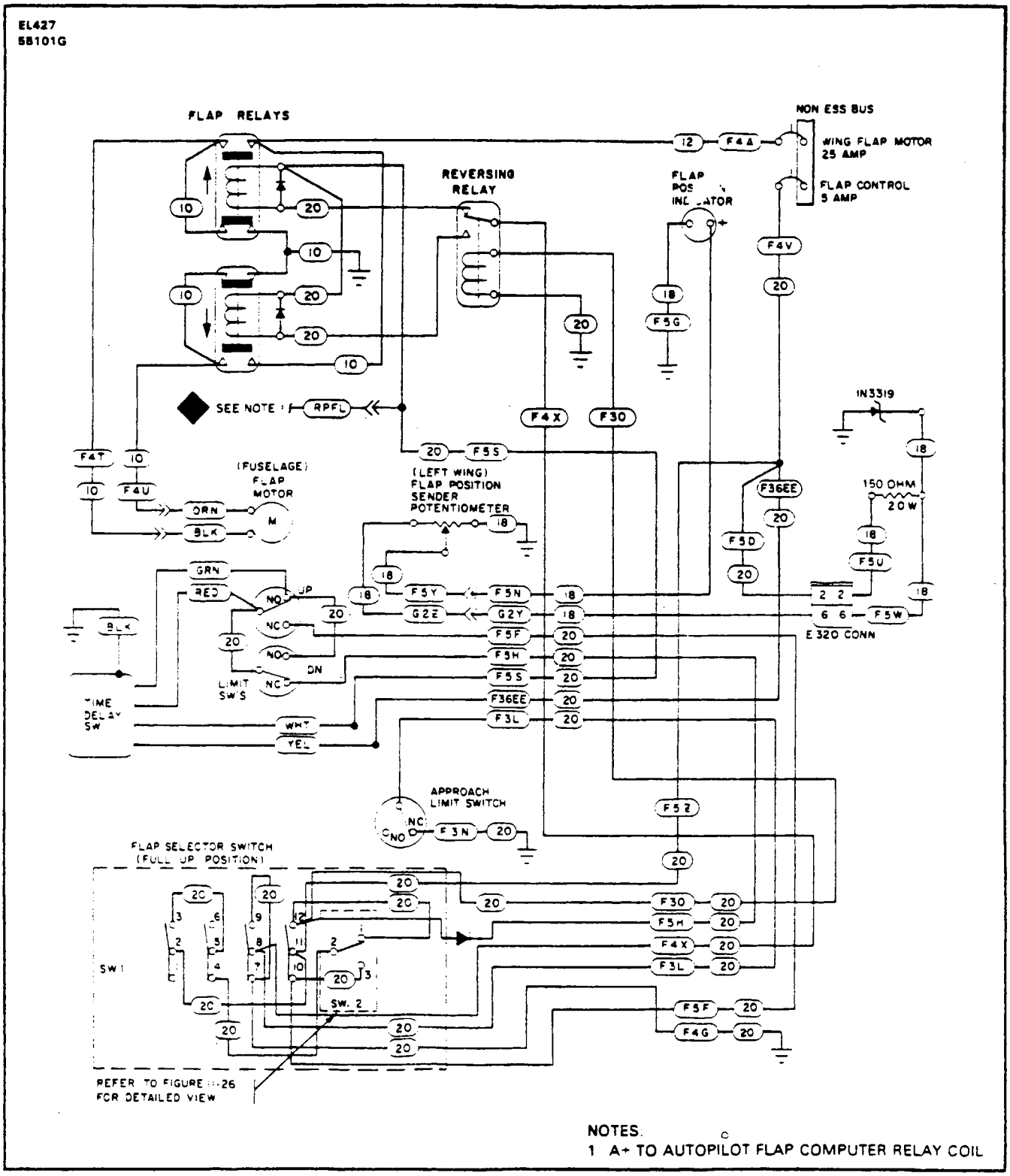

Figure 15-61 Wing Flap Motor and Control,
PA-31T S/N 31T-7820001 to 7820086 and PA-31T1 S/N 31T1-7804001 to 7804011

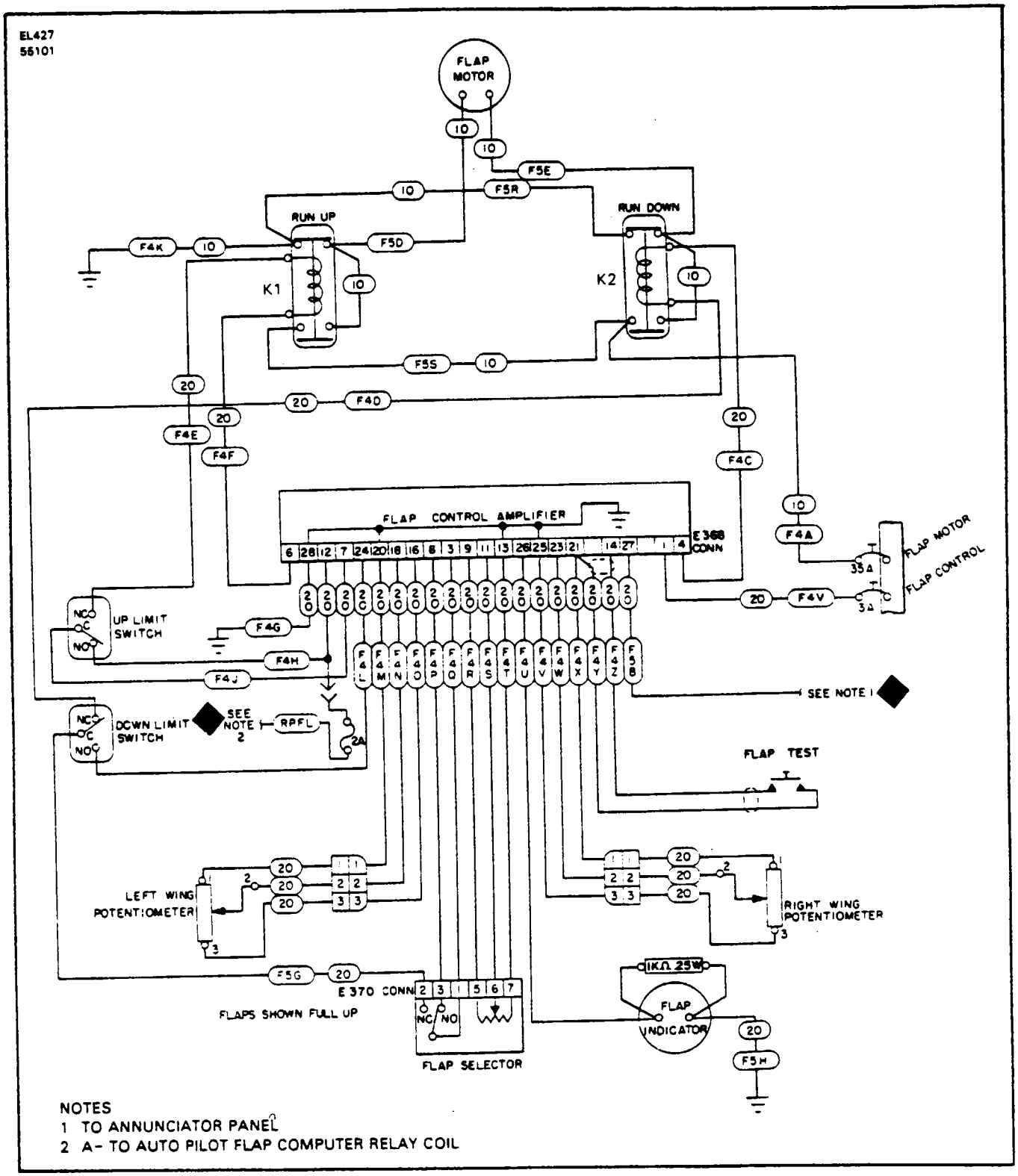

Figure 15-62. Wing Flap Motor and Control (Calco), PA-31T S/N 31T-7820087 to -8020092 and PA-31T1 S/N 31T-7904001 to -8004057

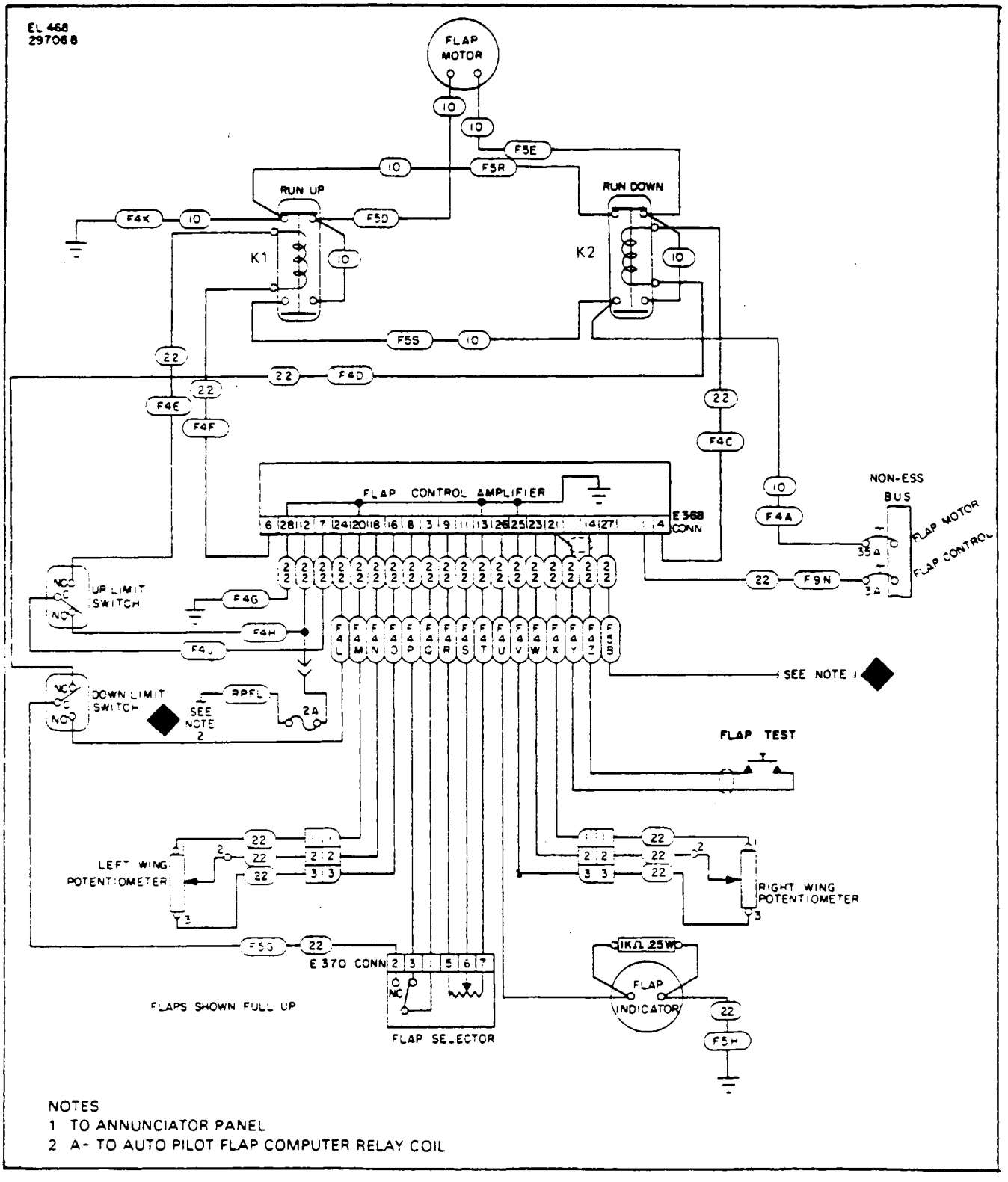

Figure 15-63. Wing Flap Motor and Control (Calco).
PA-31T S/N 31T-8120001 and up and PA-31T1 S/N 31T-8104001 and up

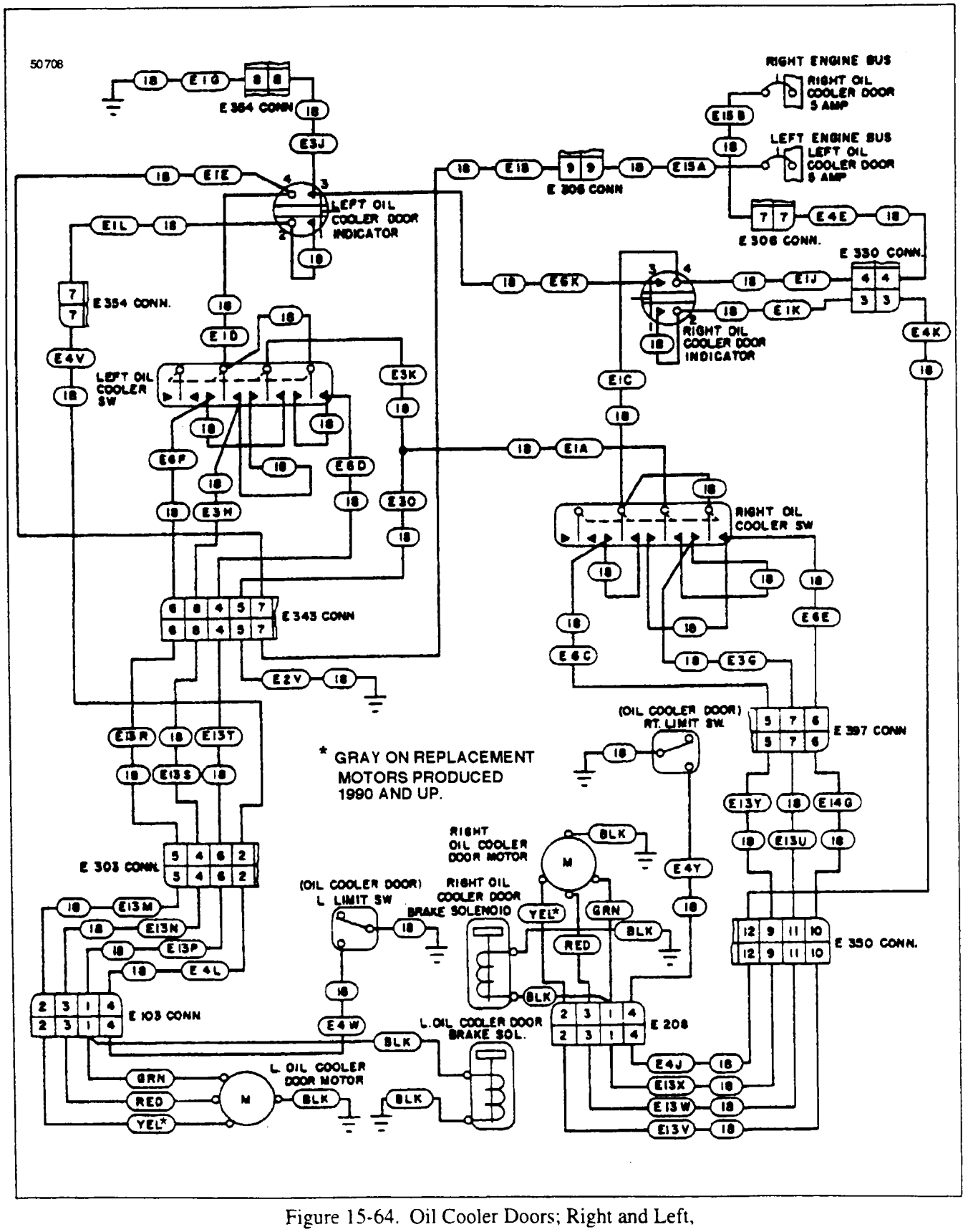

Figure 15-64. Oil Cooler Doors; Right and Left,
PA-31T S/N 31T-7400002 to -7720007

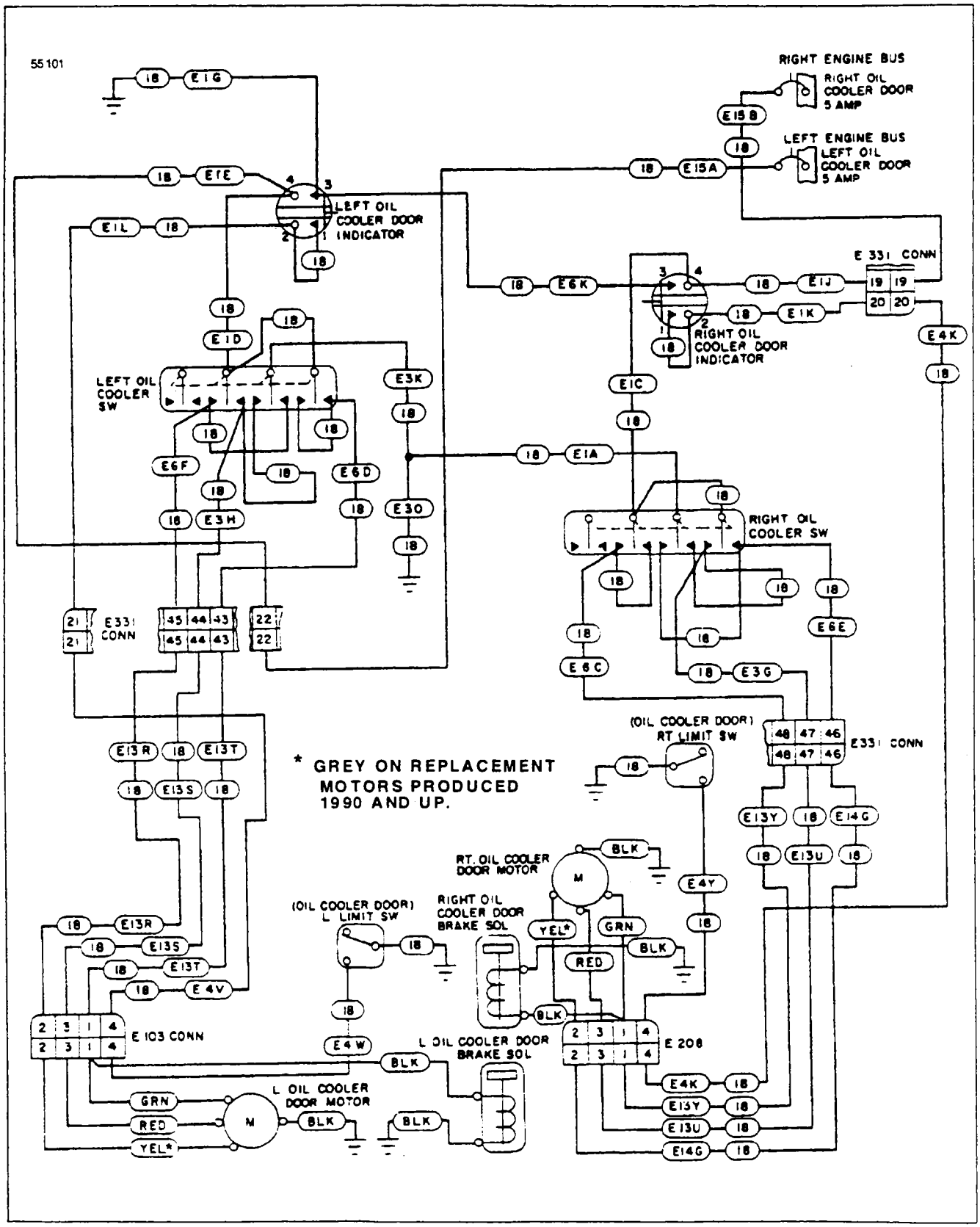

Figure 15-65. Oil Cooler Doors; Right and Left, PA-31T S/N 31T-7720008 to -7720069

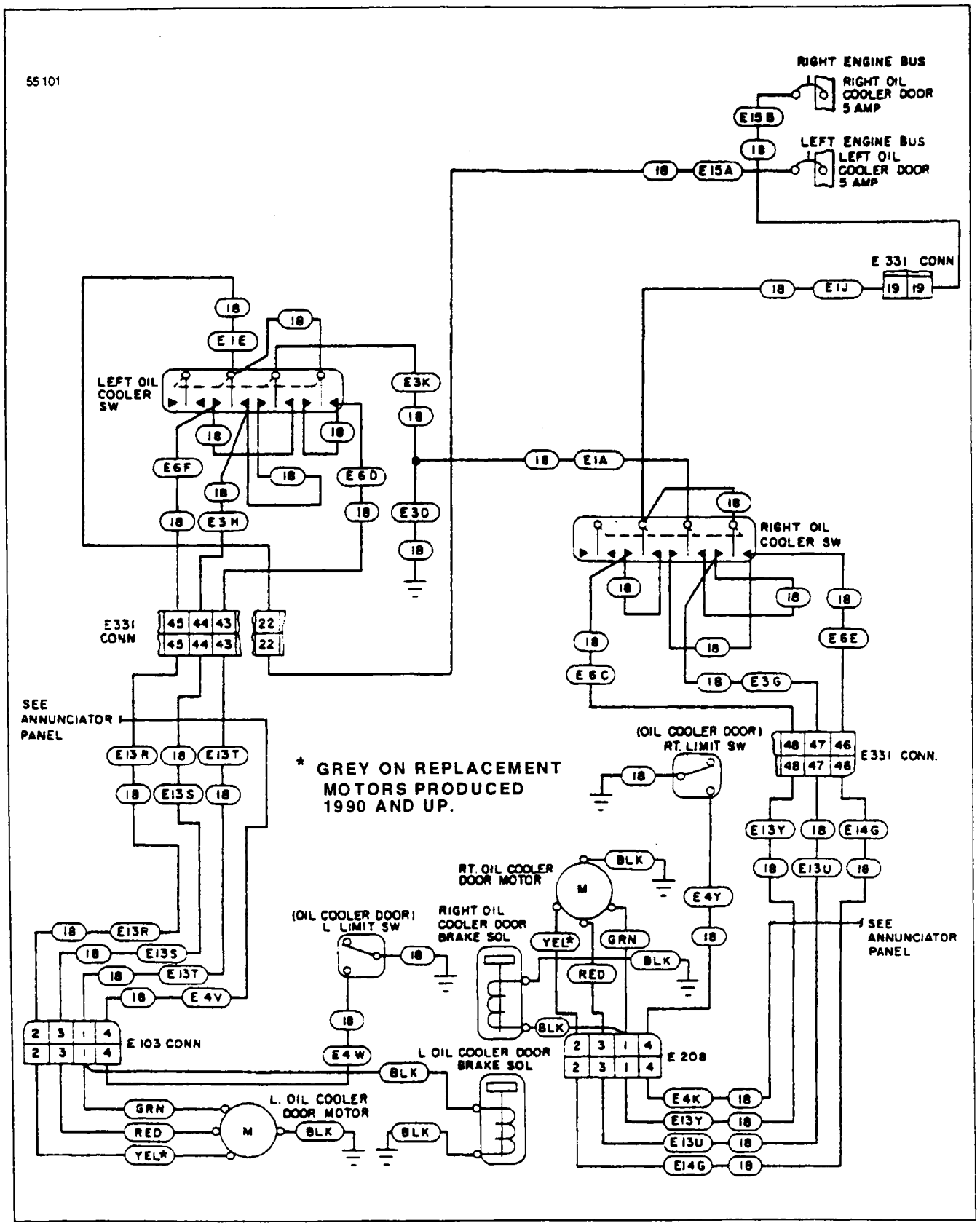

Figure 15-66. Oil Cooler Doors; Right and Left.
PA-31T S/N 31T-7820001 to -8020092 and PA-31T1 S/N 31T-7804001 to -8004057

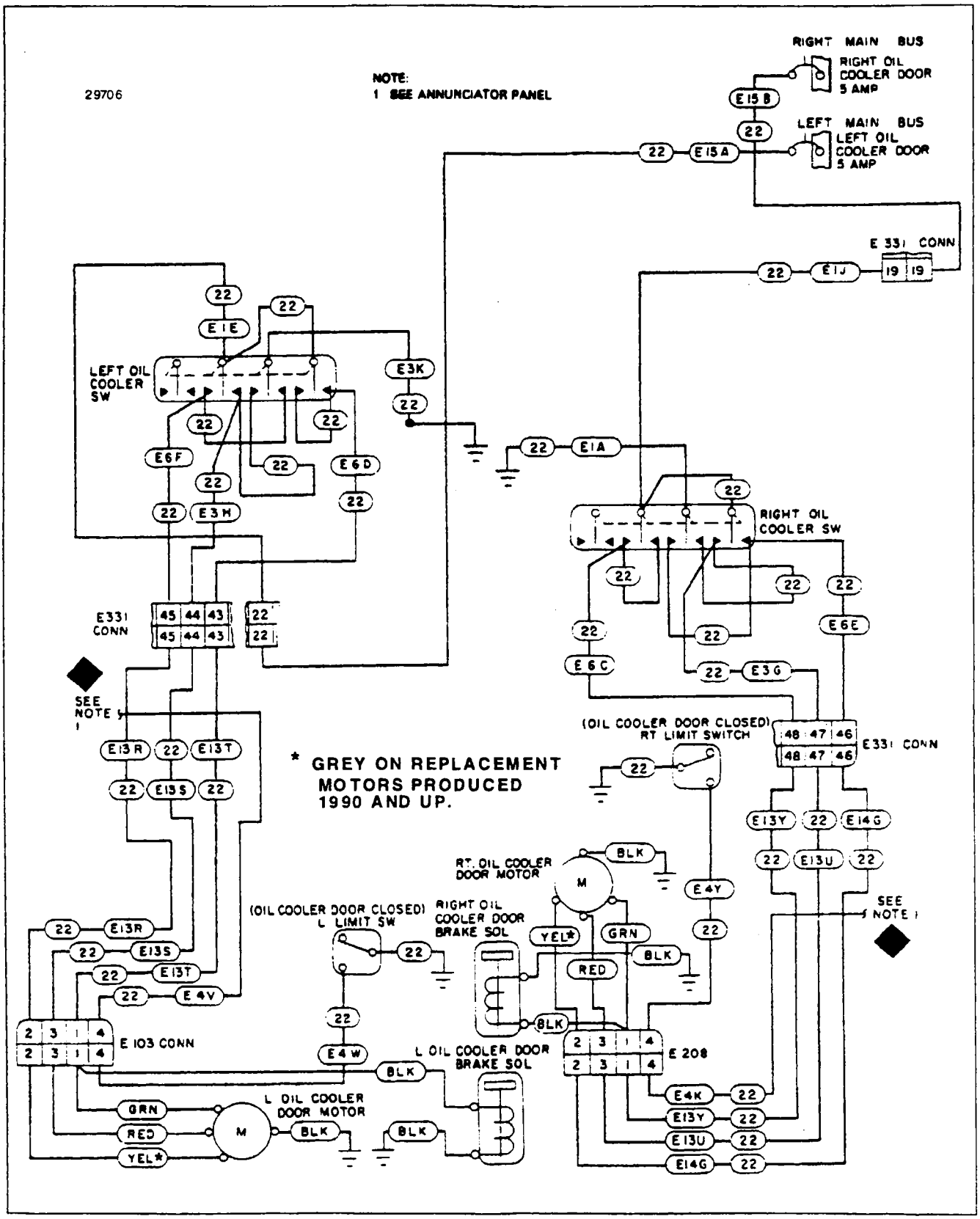

Figure 15-67. Oil Cooler Doors; Right and Left,
PA-31T S/N 31T-8120001 & up and PA-31T1 S/N 31T-8104001 to -8304003; 31T-1104004 to -1104007

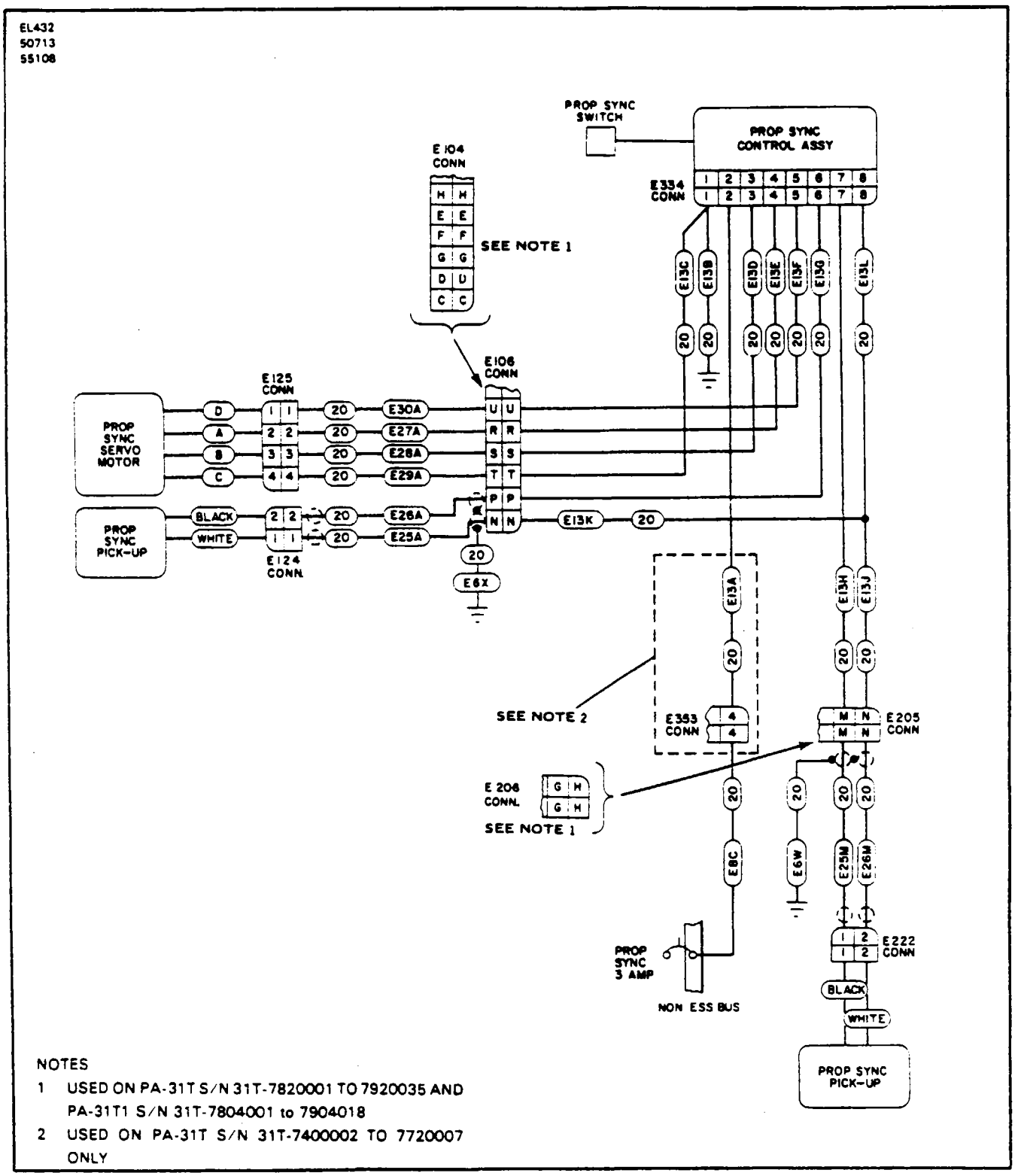

Figure 15-68. Prop. Sync.,
PA-31T S/N 31T-7400002 to 7920035 and PA-31T1 S/N 31T1-7804001 to 7904018

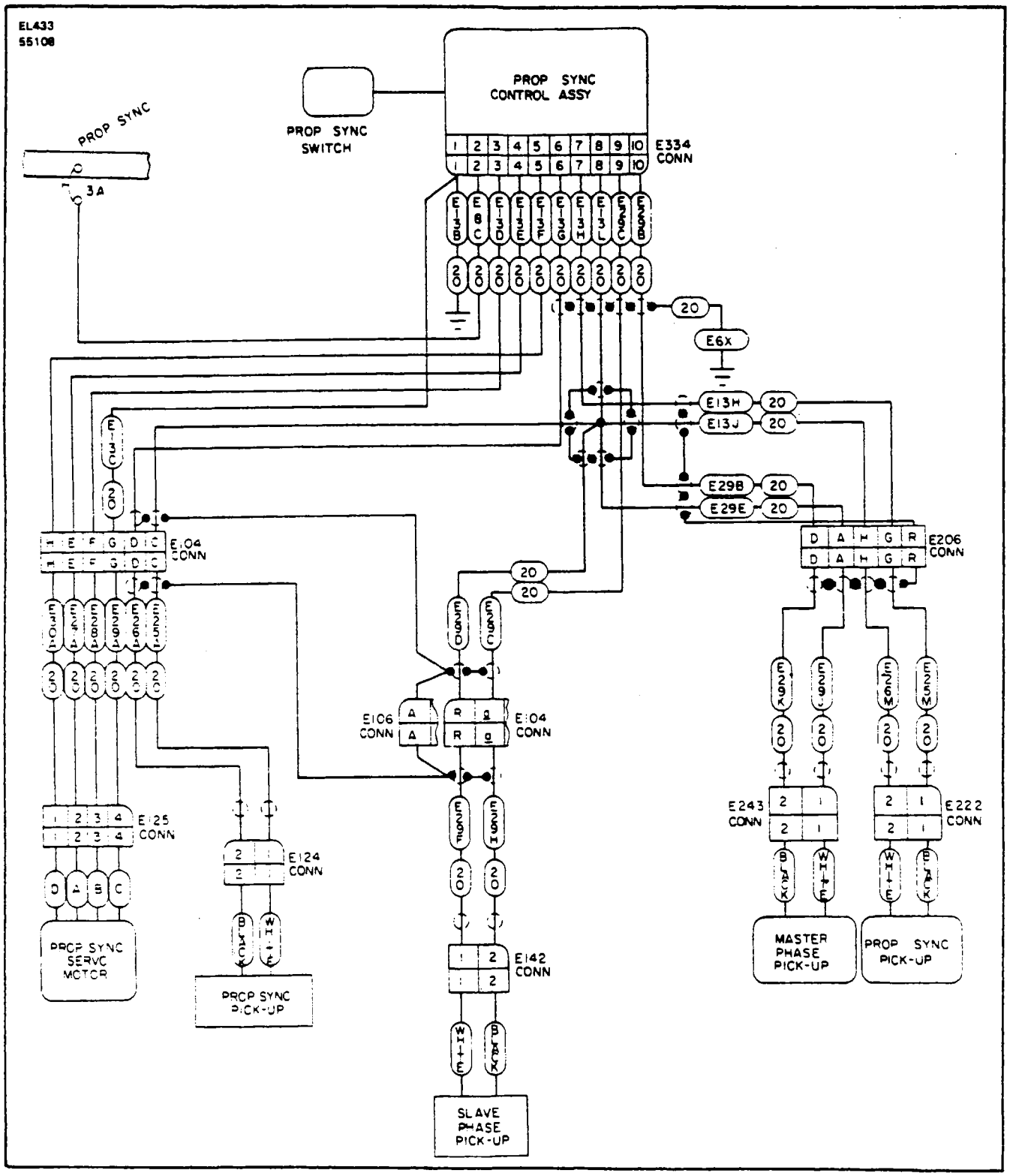

Figure 15-69. Prop. Sync.
PA-31T S/N 31T-7920036 to -8020092 and PA-31T1 S/N 31T-7904019 to -8004057

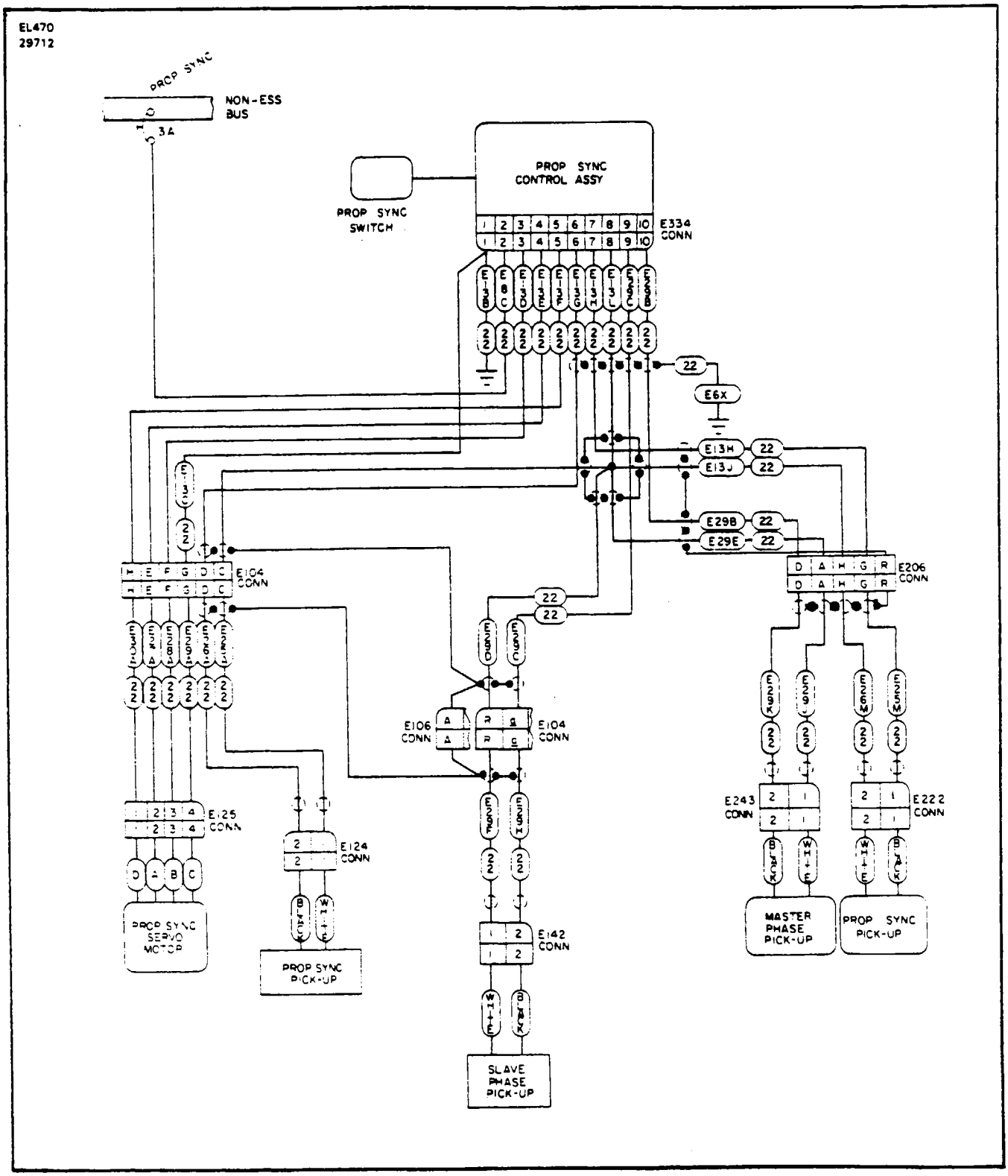

Figure 15-70. Prop. Sync.
PA-31T S/N 31T-8120001 and up and PA-31T1 S/N 31T-8104001 and up

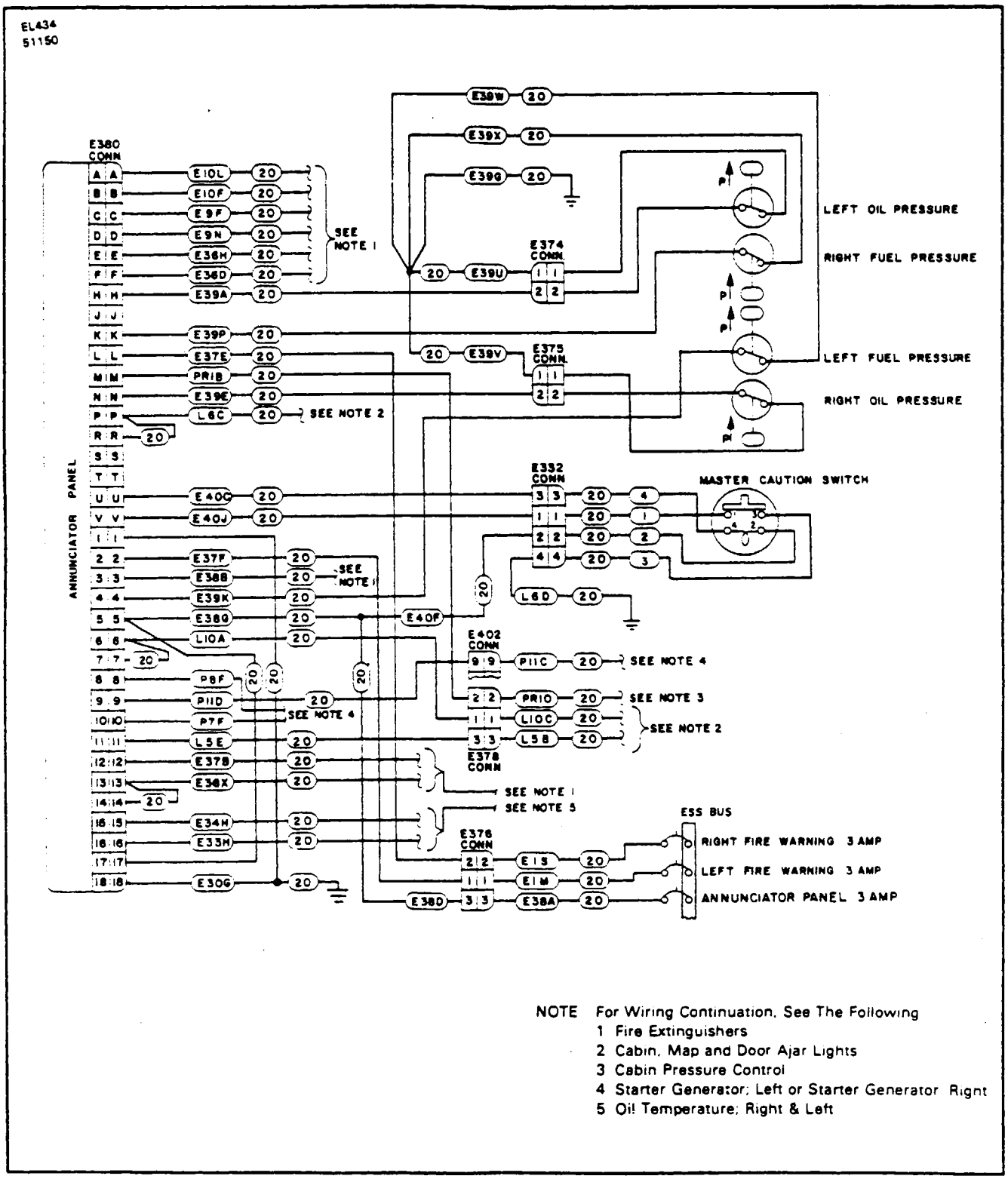

Figure 15-71. Annunciator Panel.
PA-31T S/N 31T-7400002 to -7720007

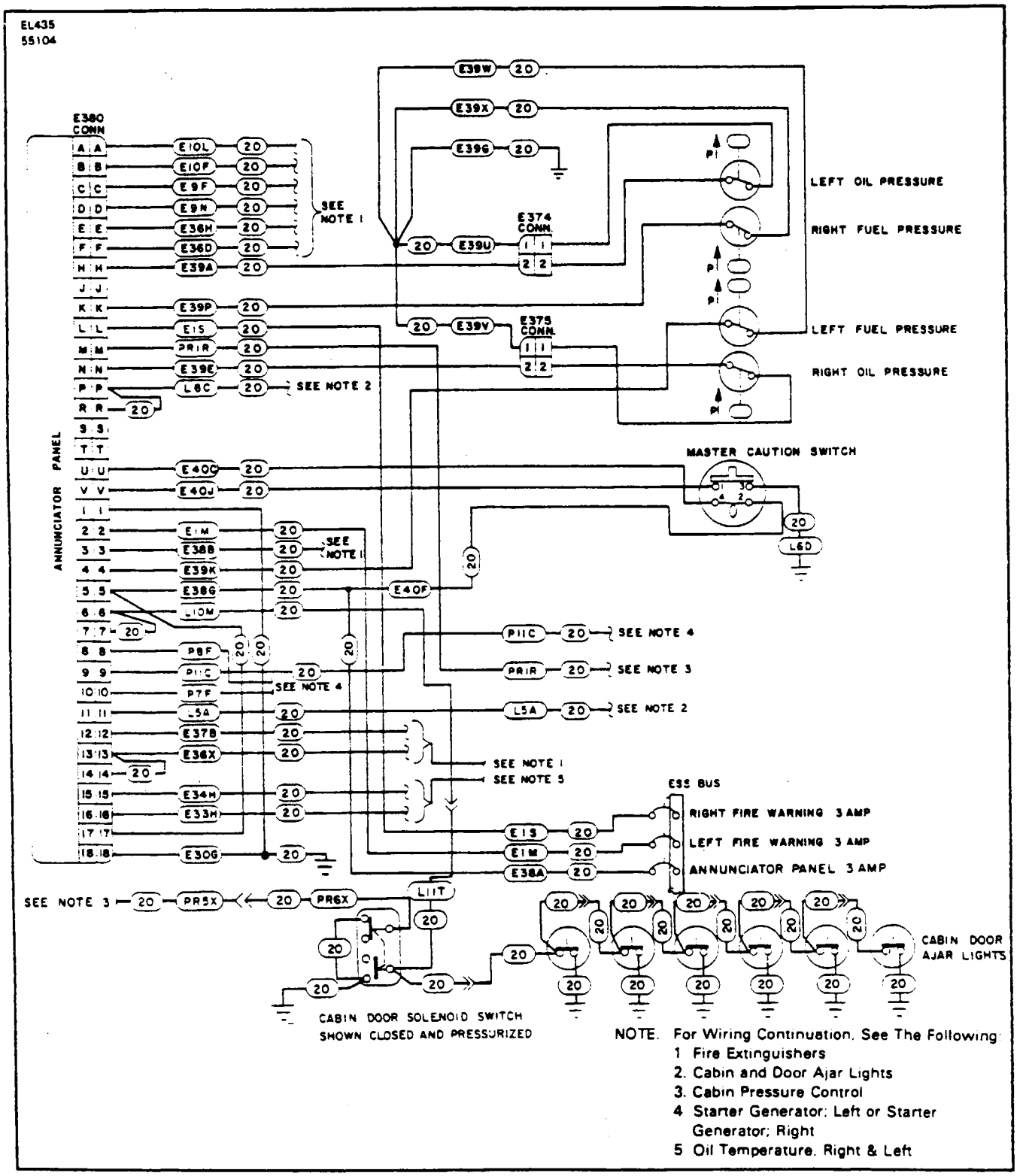

Figure 15-72. Annunciator Panel, PA-31T S/N 31T-7720008 to -7720069

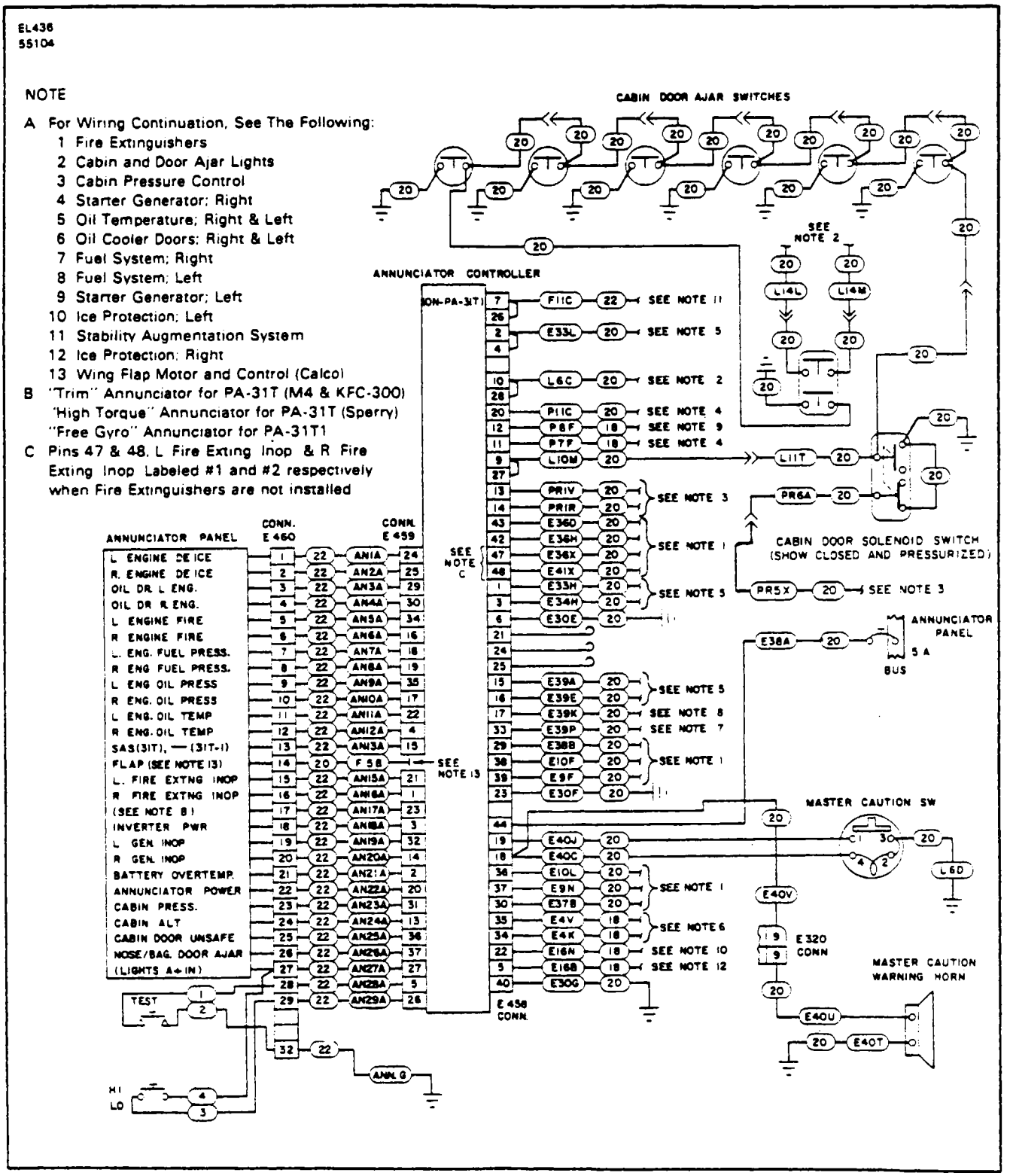

Figure 15-73. Annunciator Panel.
PA-31T S/N 31T-7820001 to -8020092 and PA-31T1 S/N 31T-7804001 to -8004057

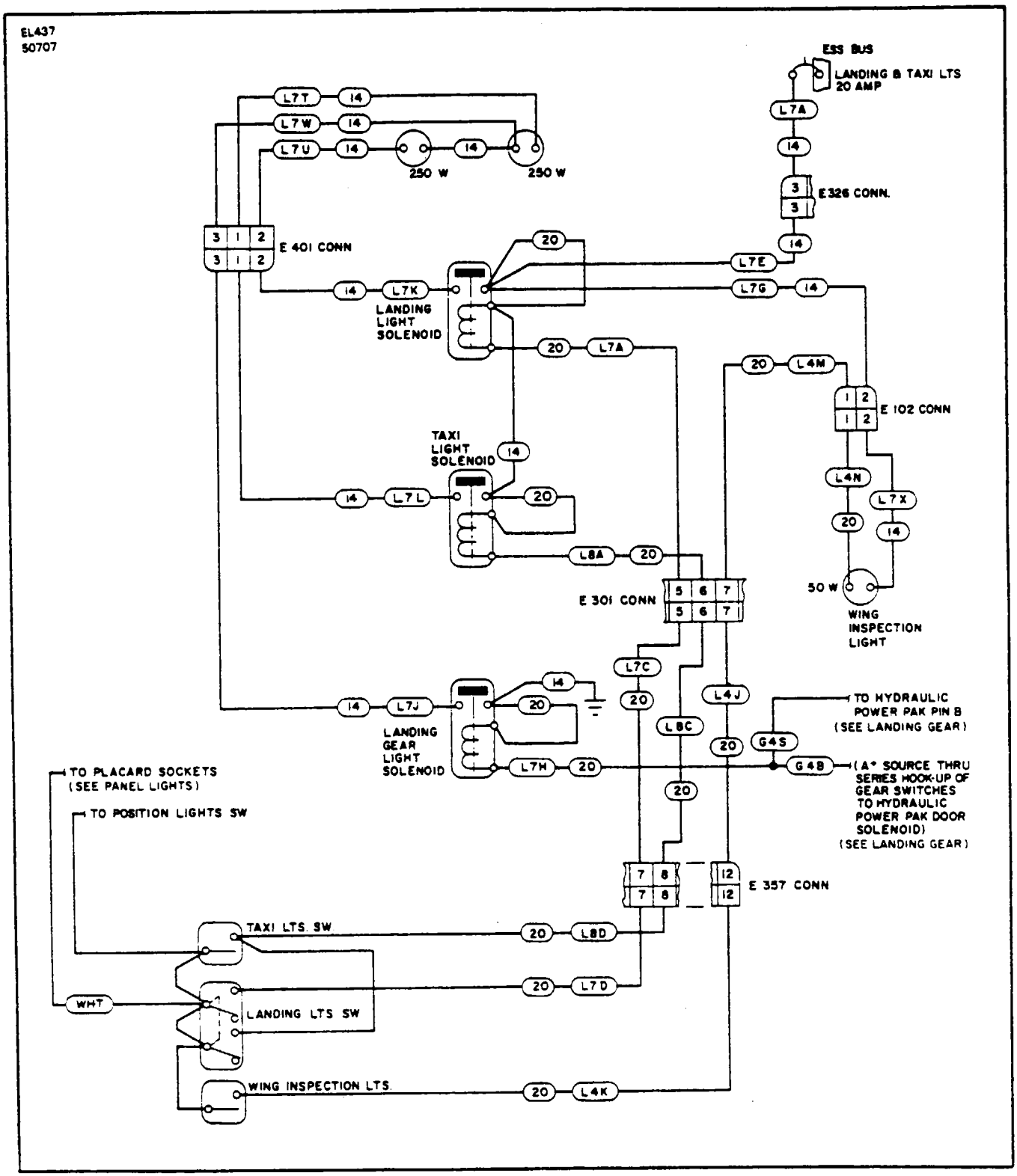

Figure 15-74. Landing, Taxi and Wing Inspection Lights, PA-31T S/N 31T-7400002 to 7720007

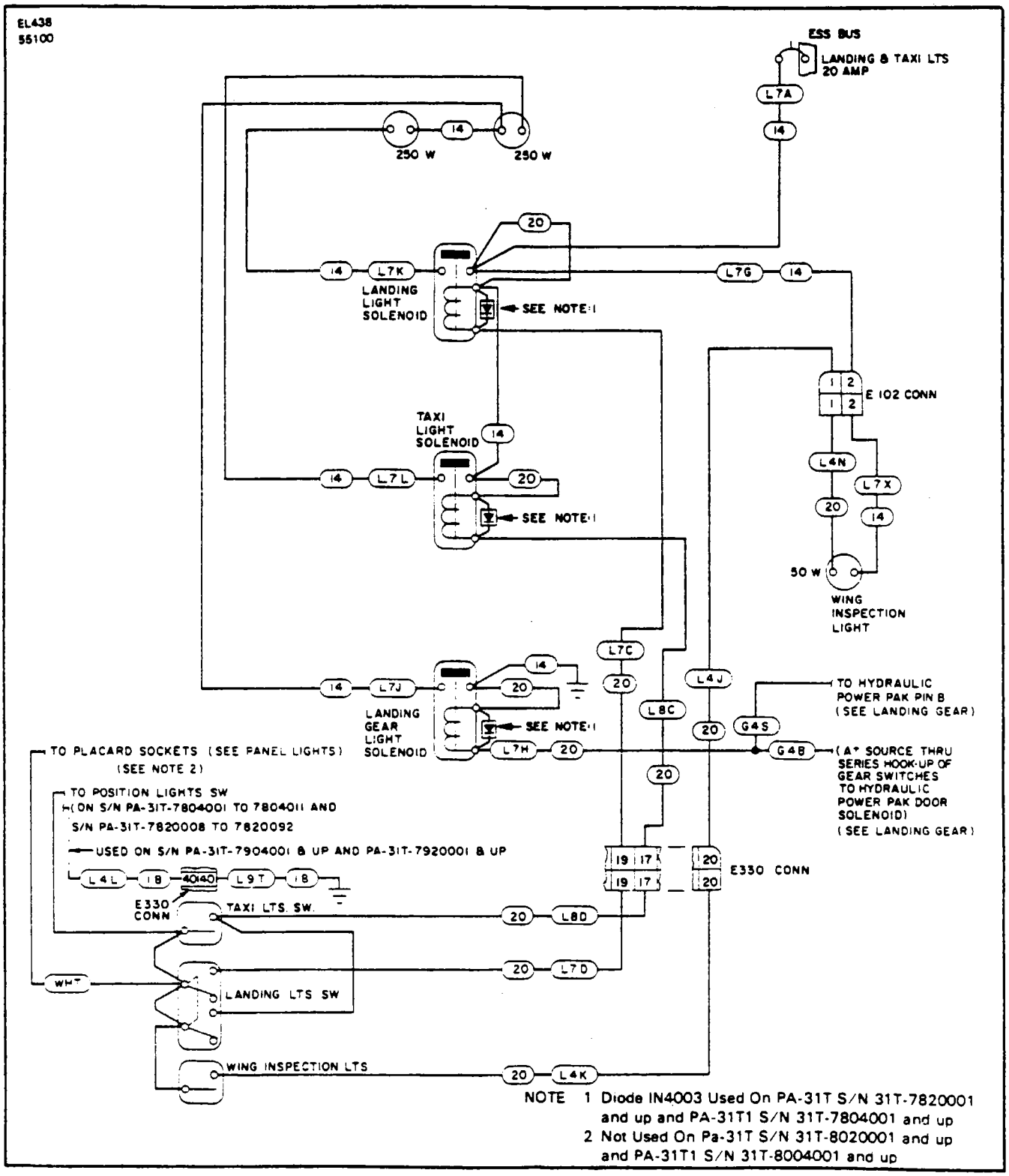

Figure 15-75. Landing, Taxi and Wing Inspection Lights.
PA-31T S/N 31T-7720008 to -8020092 and PA-31T1 S/N 31T-7804001 to -8004057

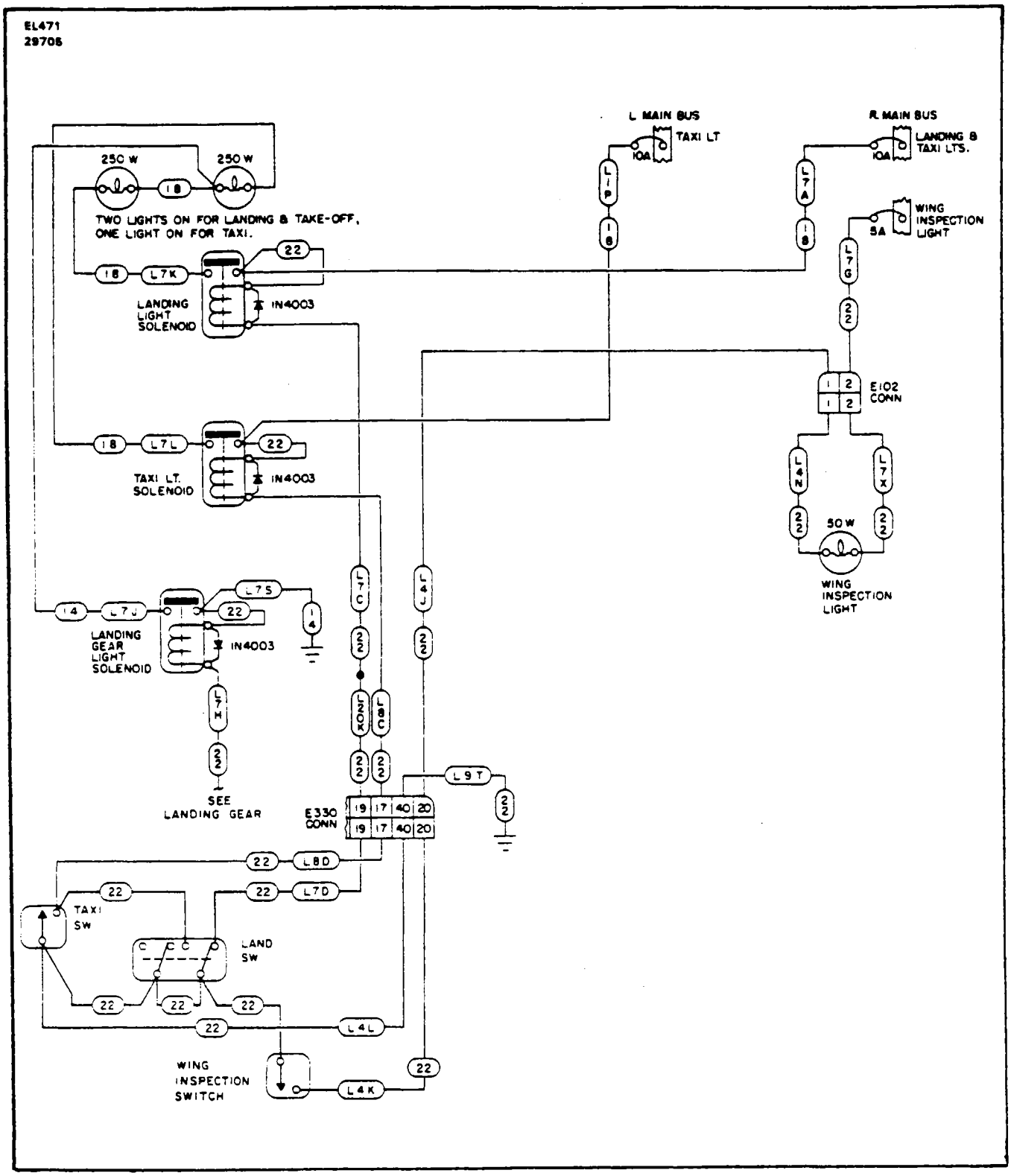

Figure 15-76. Landing, Taxi and Wing Inspection Lights.
PA-31T S/N 31T-8120001 and up and PA-31T1 S/N 31T-8104001 and up

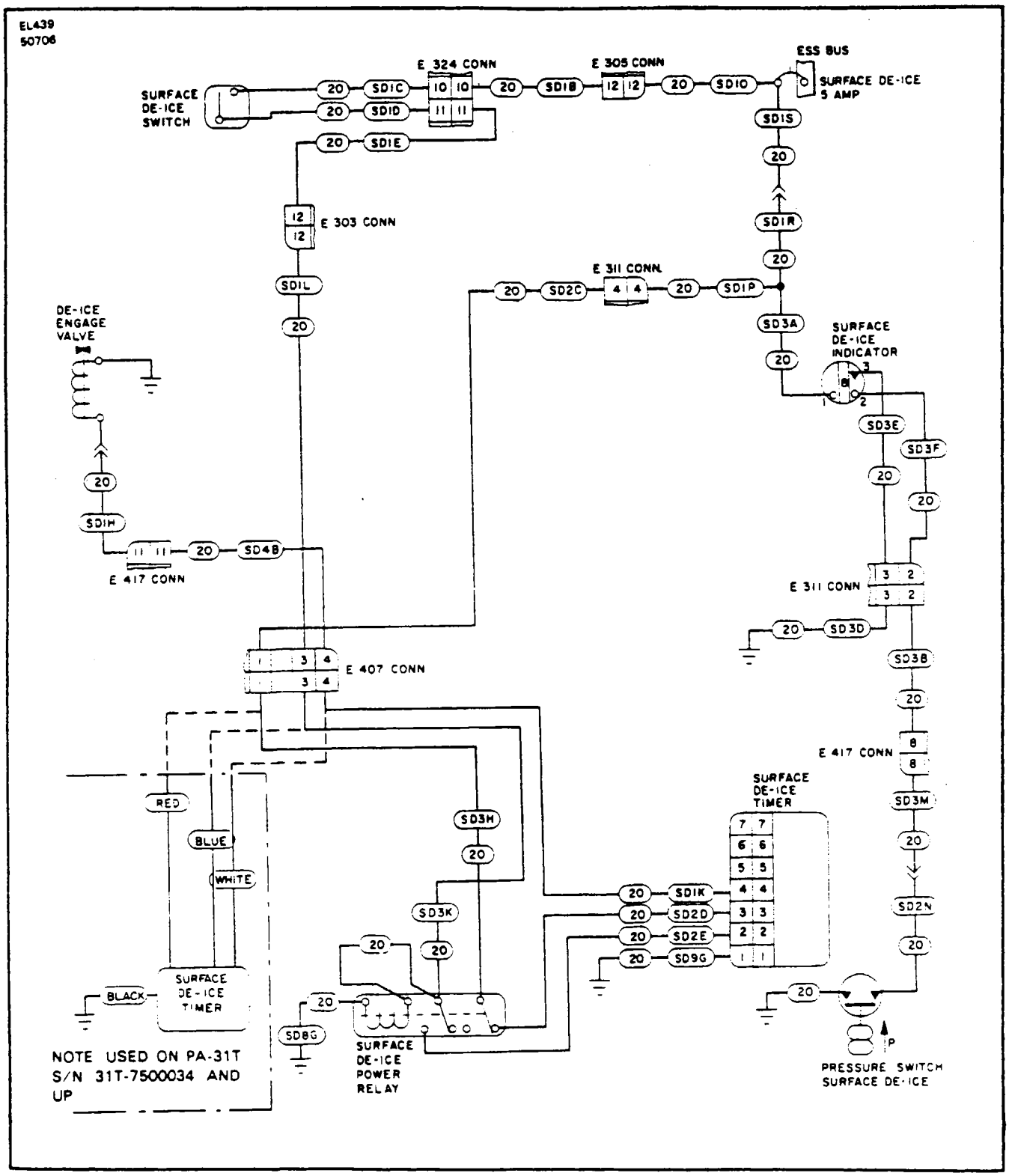

Figure 15-77. Surface Deice, PA-31T S/N 31T-7400002 to -7720007

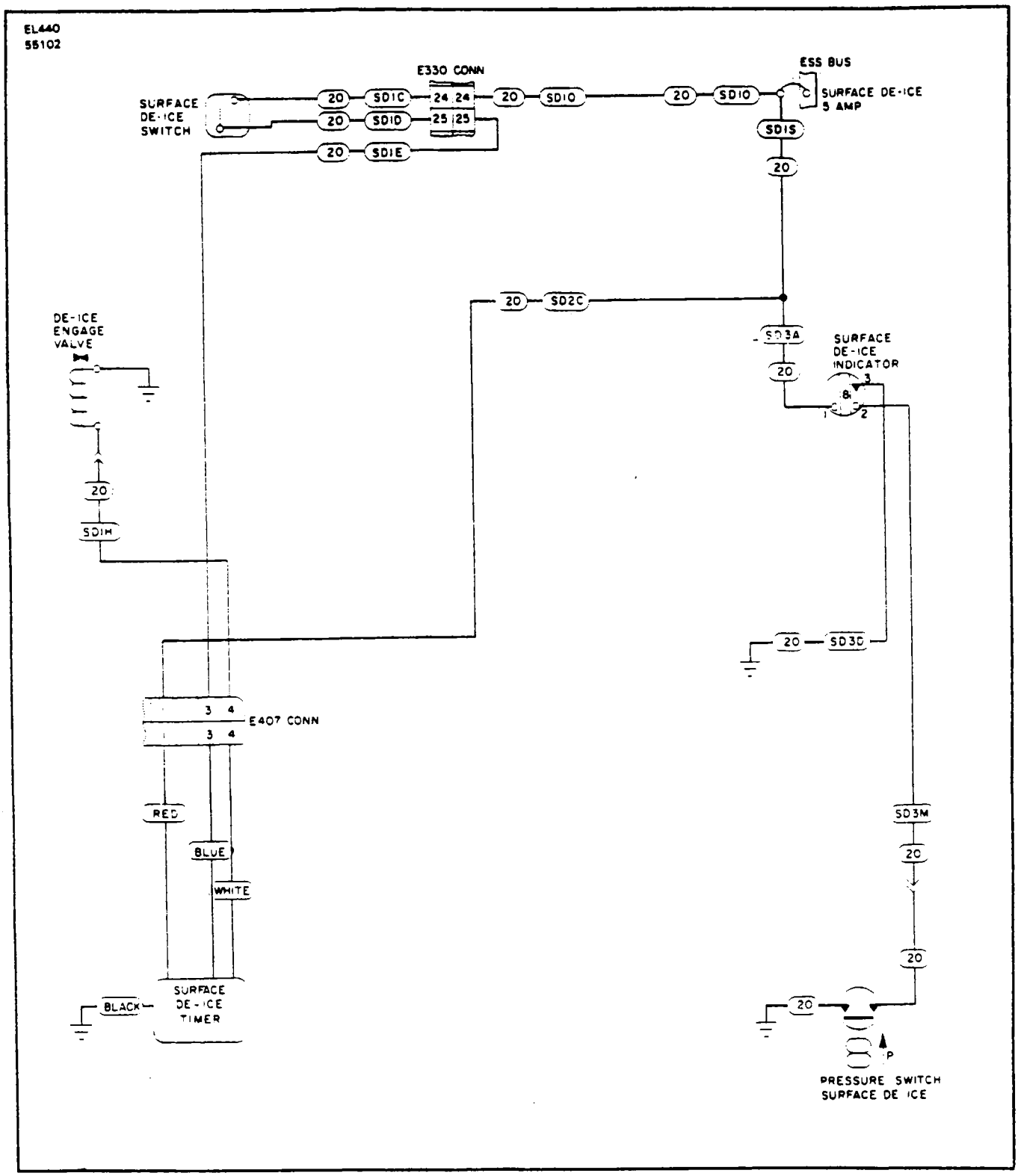

Figure 15-78. Surface Deice.
PA-31T S/N 31T-7720008 to -8020092 and PA-31T1 S/N 31T-7804001 to -8004057

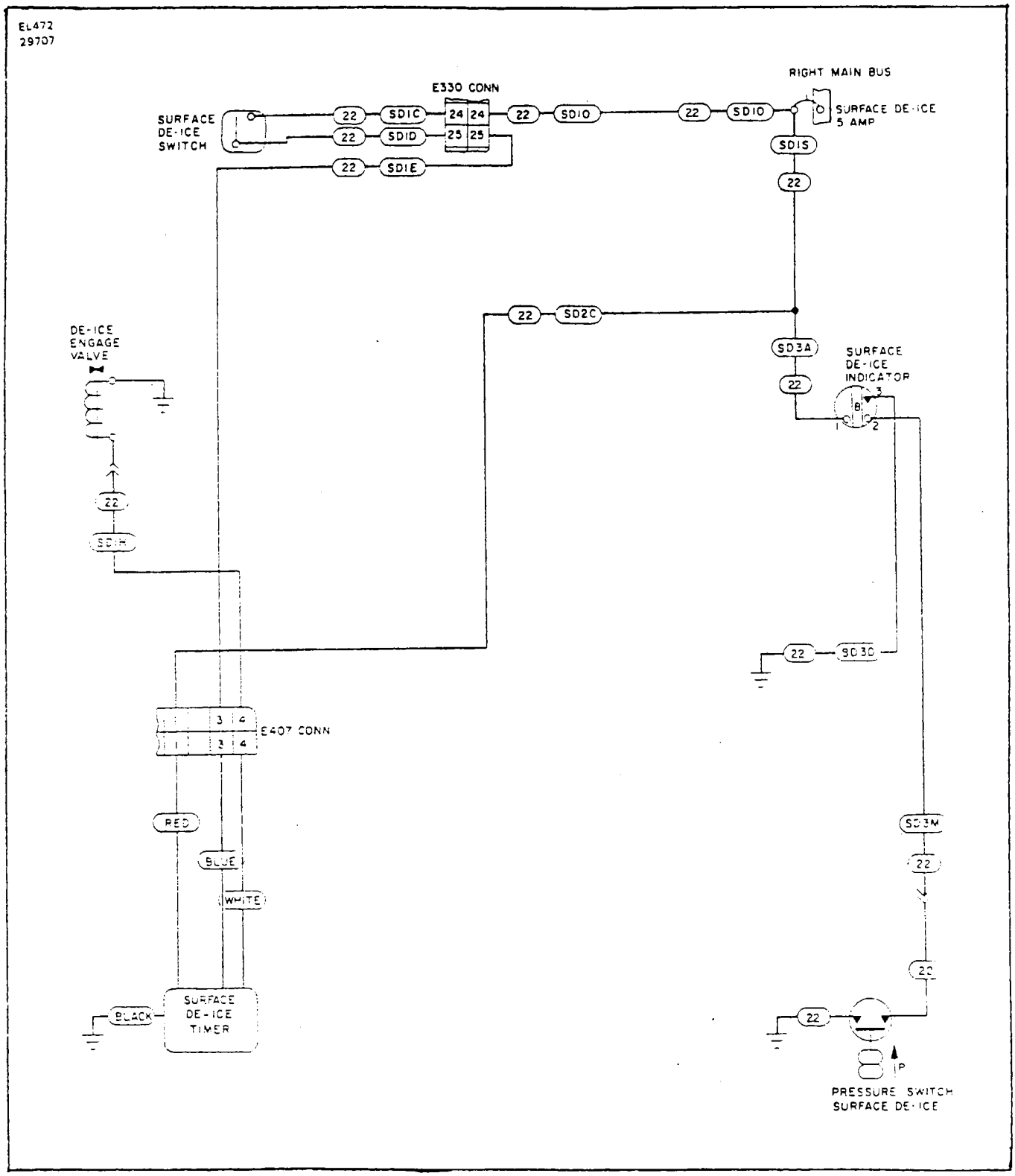

Figure 15-79. Surface Deice.
PA-31T S/N 31T-8120001 and up and PA-31T1 S/N 31T-8104001 and up

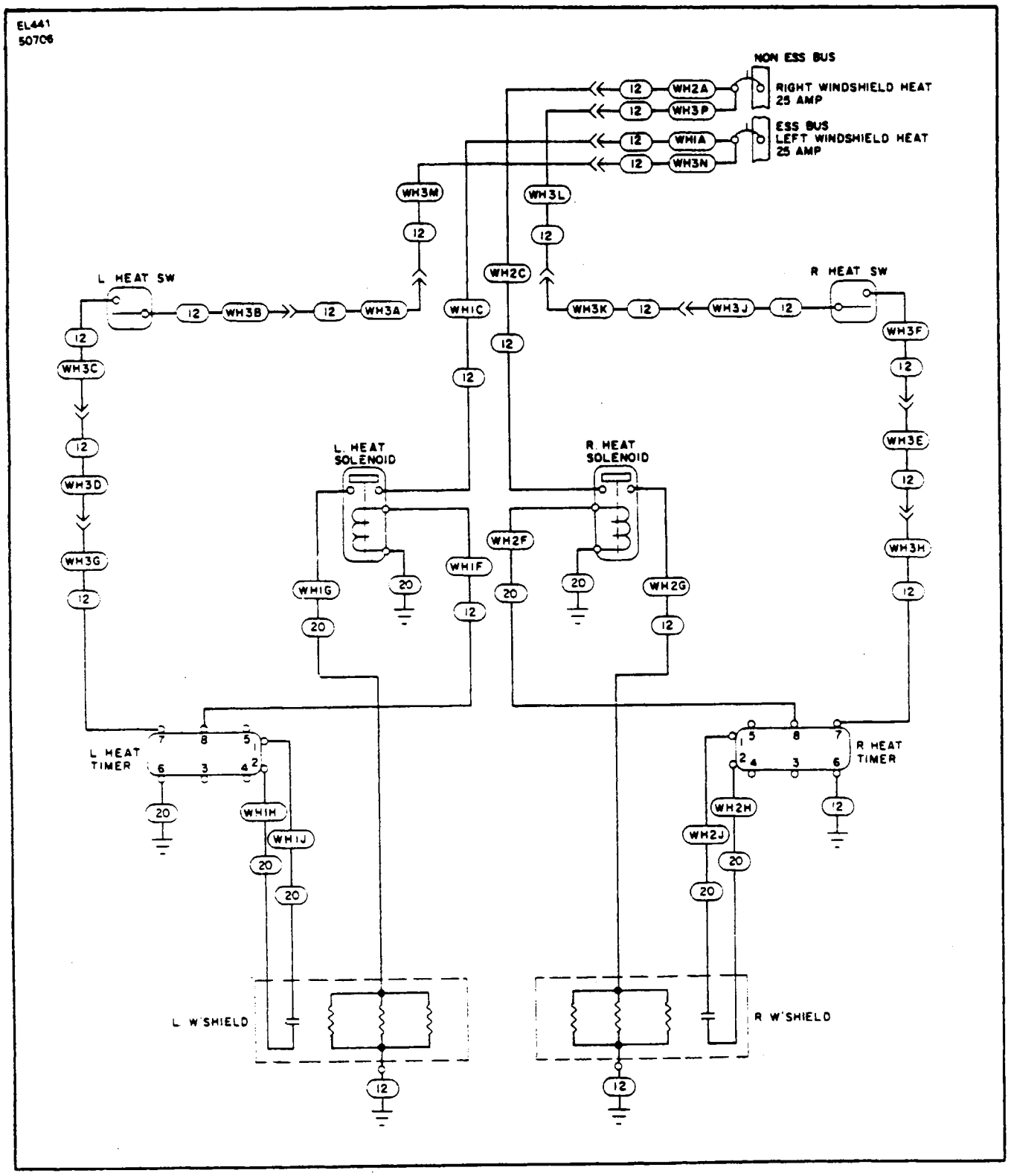

Figure 15-80. Windshield Heat; Right and Left.
PA-31T S/N 31T-7400002 to -7720007

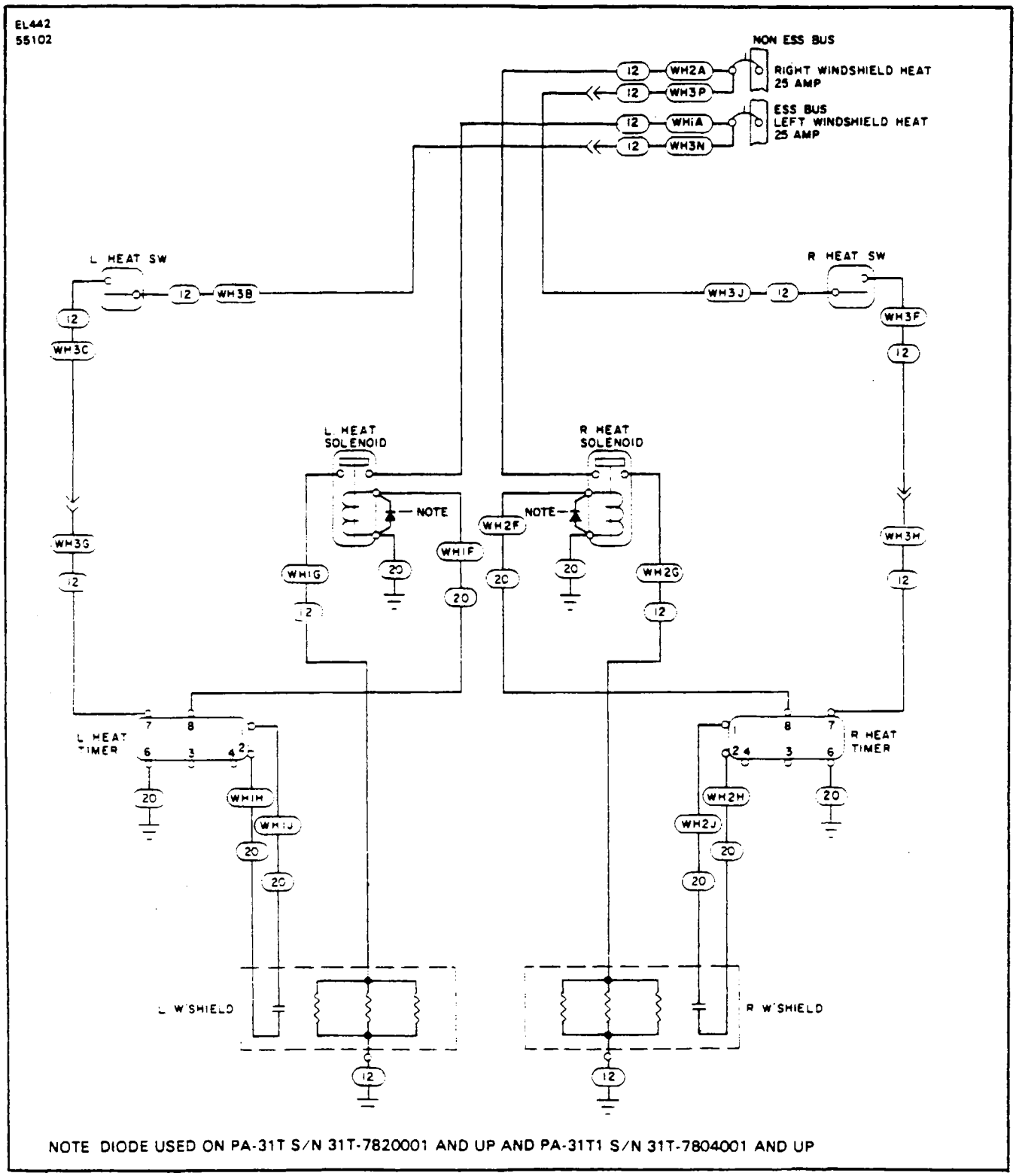

Figure 15-81. Windshield Heat; Right and Left.
PA-31T S/N 31T-7720008 to 7920094 and PA-31T1 S/N 31T-7804001 to 7904057

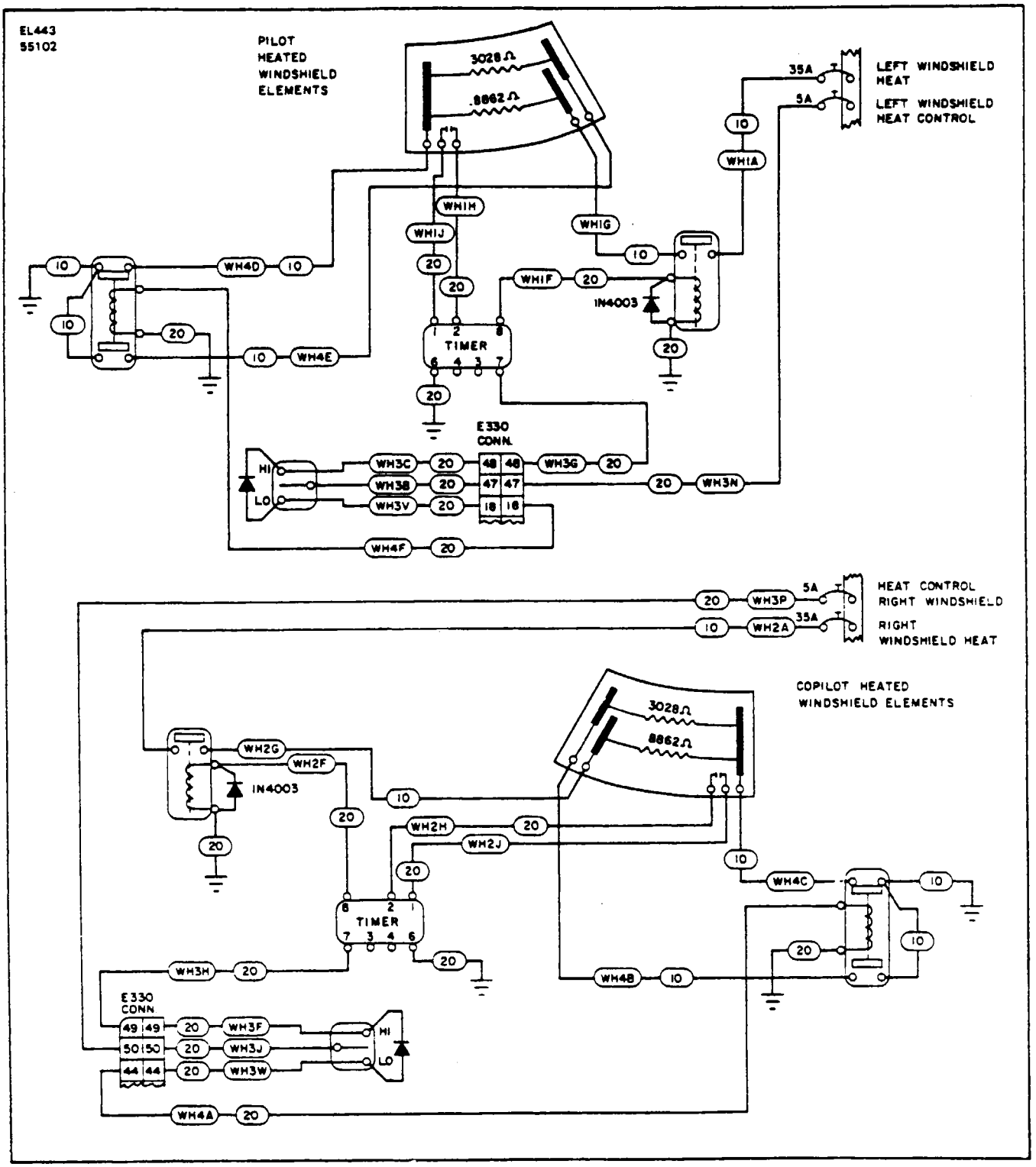

Figure 15-82. Windshield Heat: Right and Left.
PA-31T S/N 31T-8020001 to -8020092 and PA-31T1 S/N 31T-8004001 to -8004057

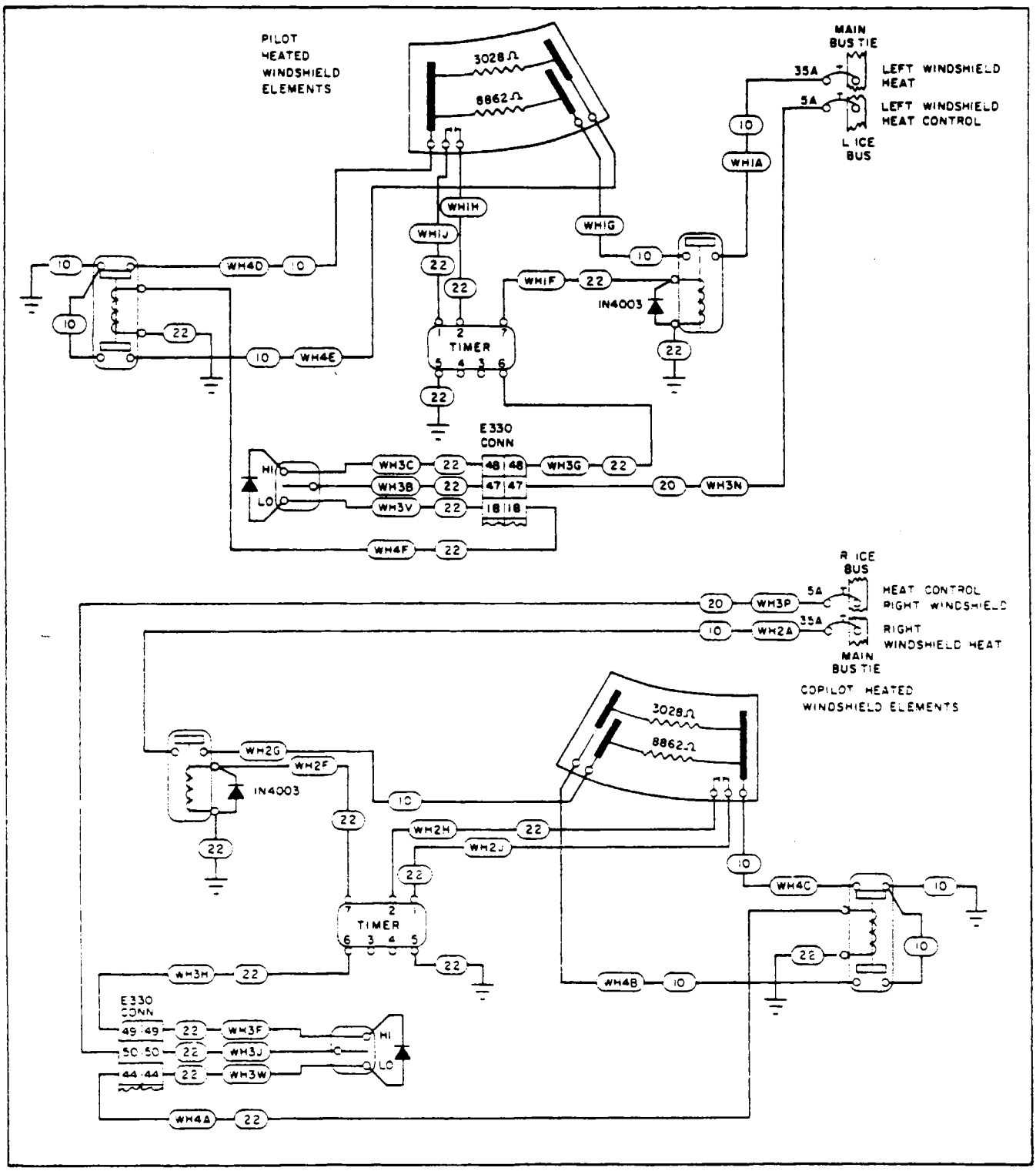

Figure 15-83. Windshield Heat; Right and Left,
PA-31T S/N 31T-8120001 and up and PA-31T1 S/N 31T-8104001 and up

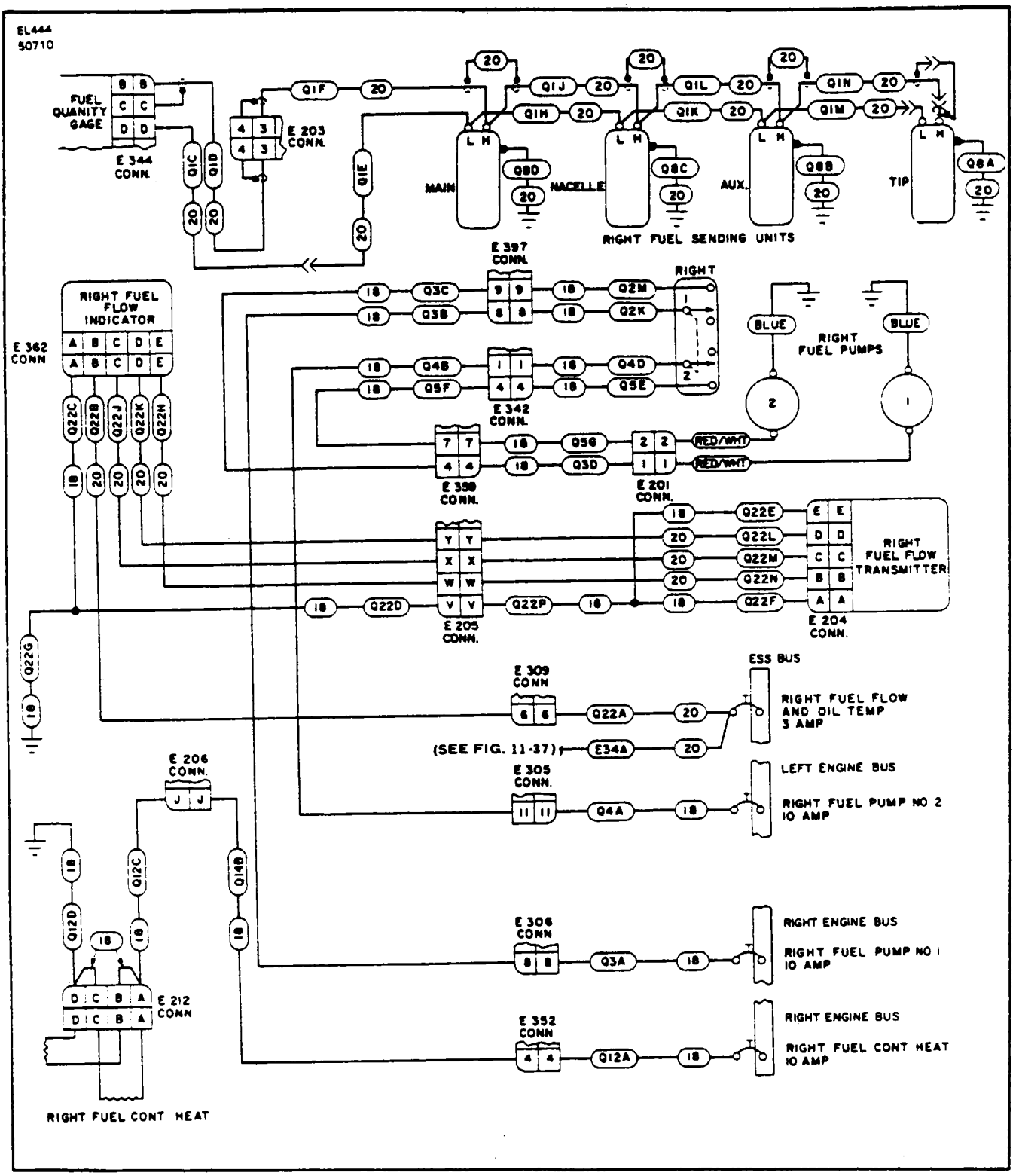

Figure 15-84. Fuel System; Right,
PA-31T S/N 31T-7400002 to -7720007

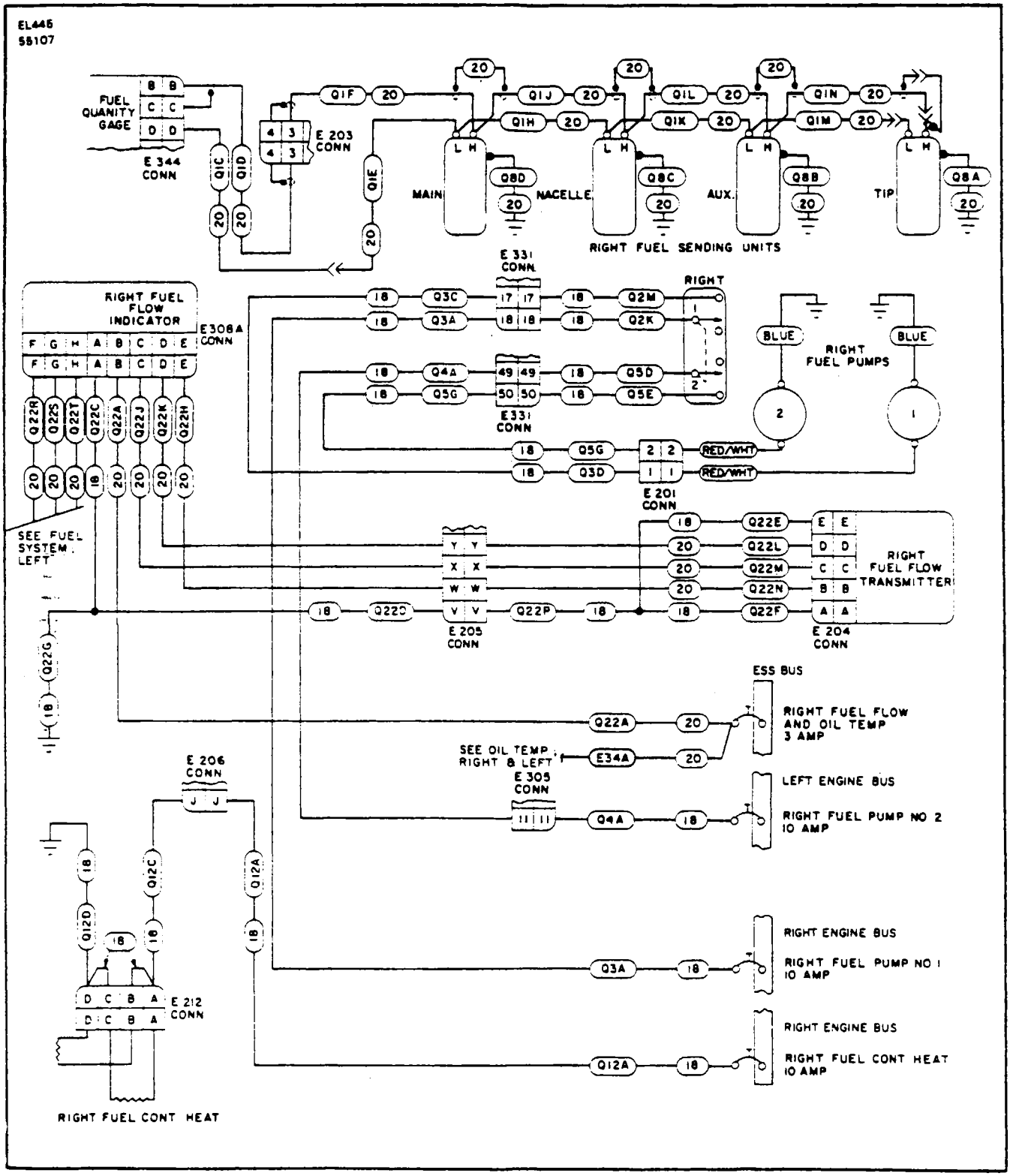

Figure 15-85. Fuel System: Right.
PA-31T S/N 31T-7720008 to -7720069

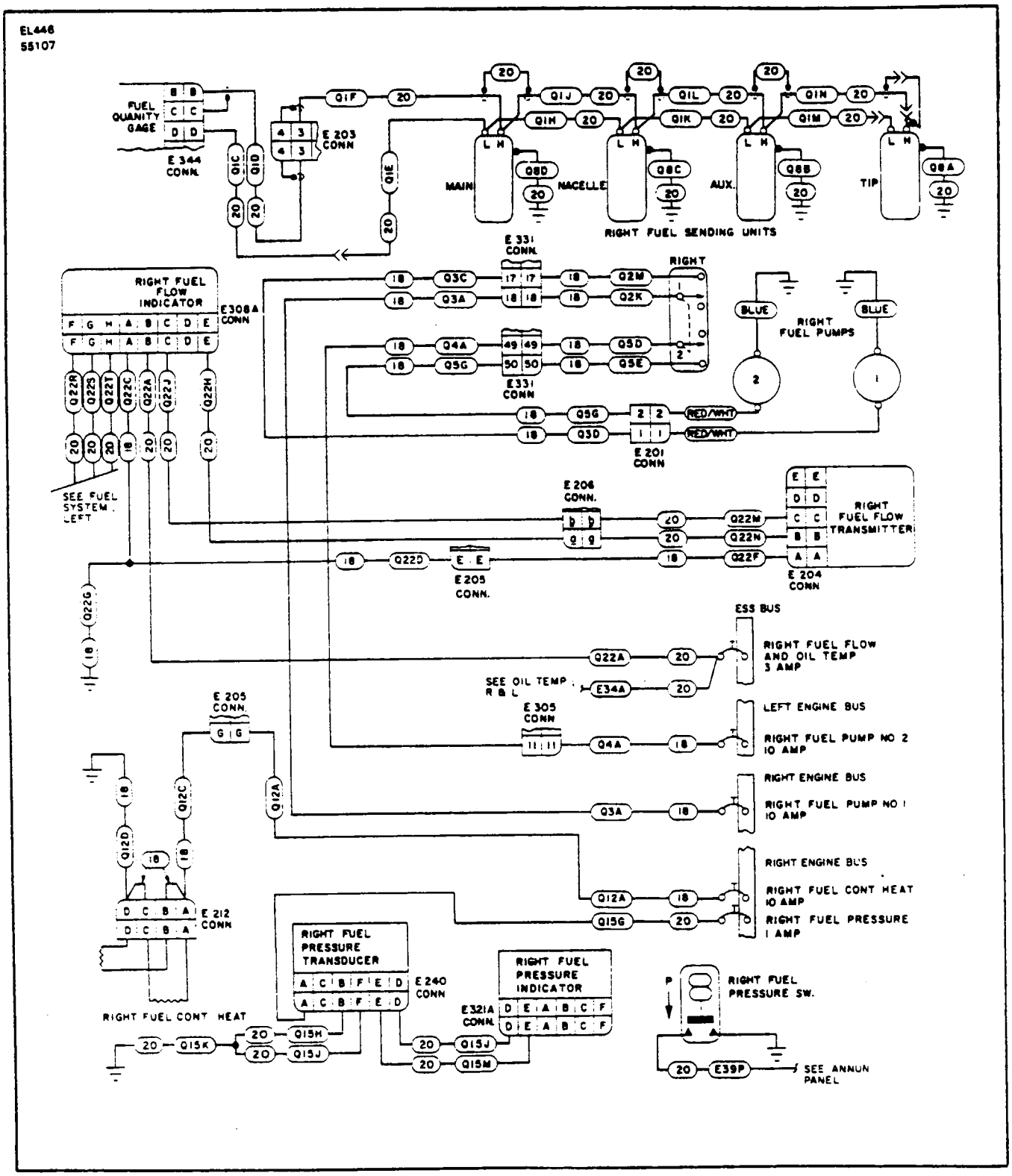

Figure 15-86. Fuel System: Right,
PA-31T S/N 31T-7820001 to -8020092 and PA-31T1 S/N 31T-7804001 to -8004057

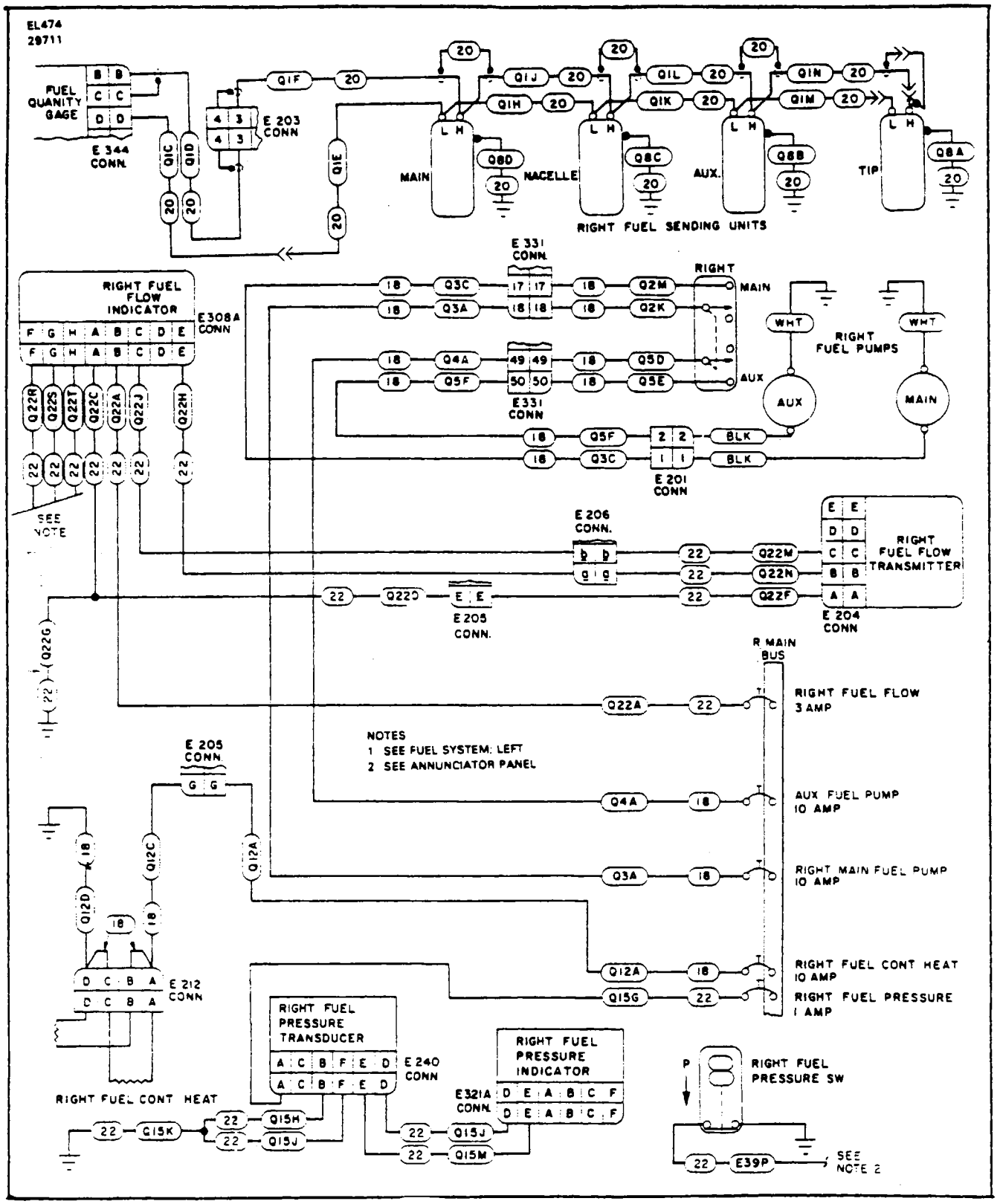

Figure 15-87. Fuel System; Right.
PA-31T S/N 31T-8120001 and up and PA-31T1 S/N 31T-8104001 and up

THIS PAGE INTENTIONALLY LEFT BLANK

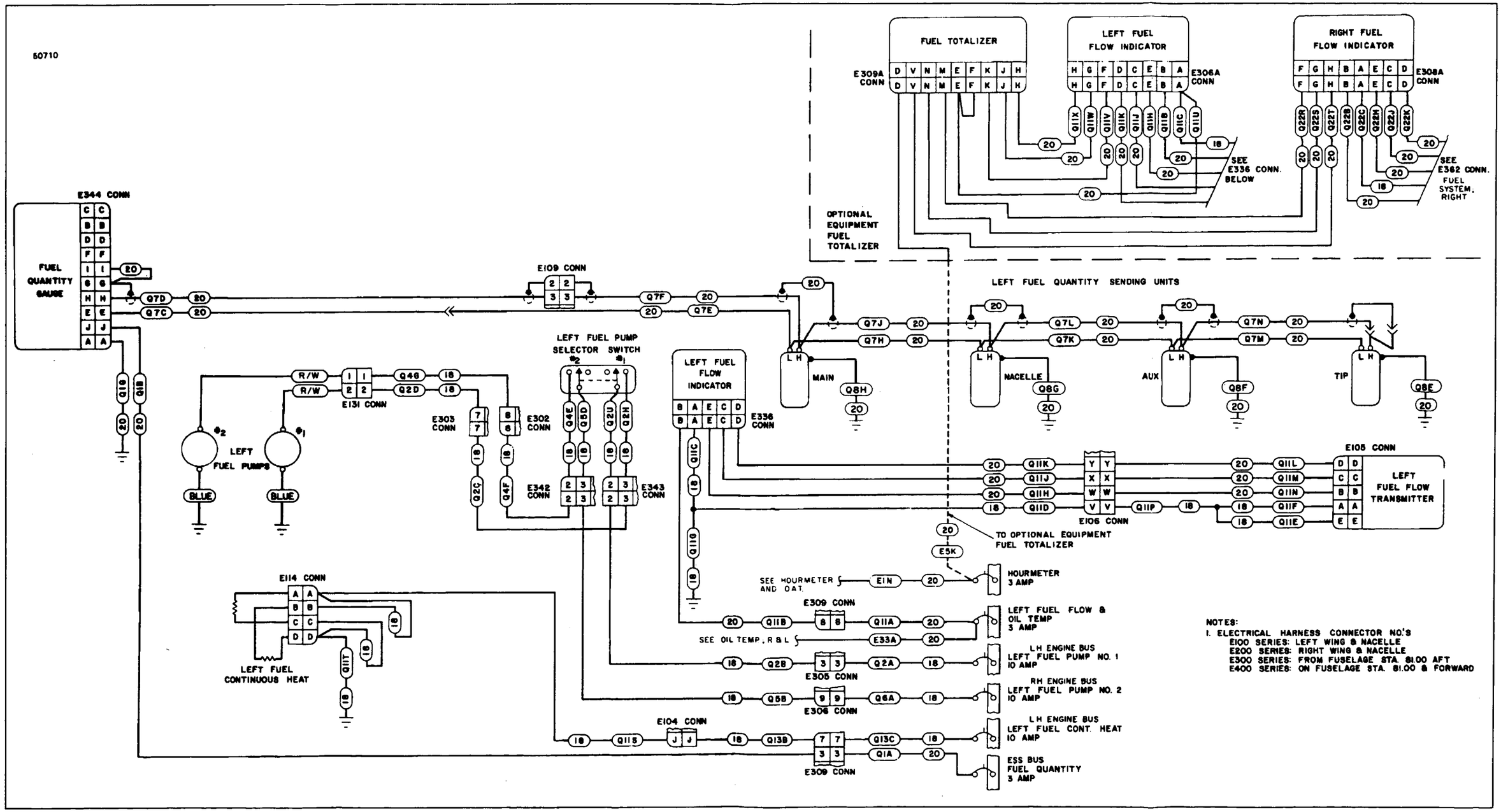

Figure 15-88. Fuel System - Left,
PA-31T S/N 31T-7400002 to -7720007

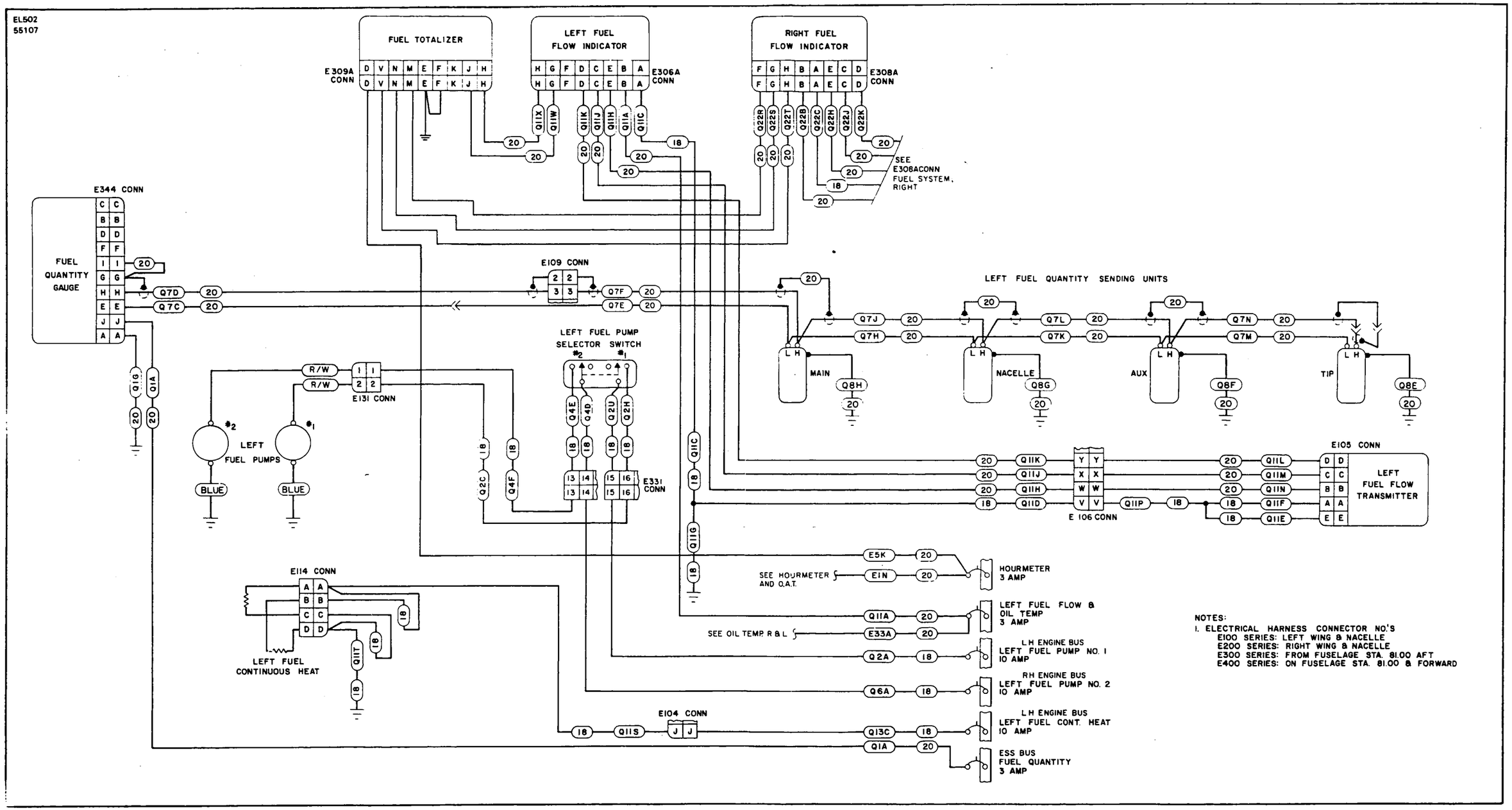

Figure 15-89. Fuel System; Left,
PA-31T S/N 31T-7720008 to -7720069

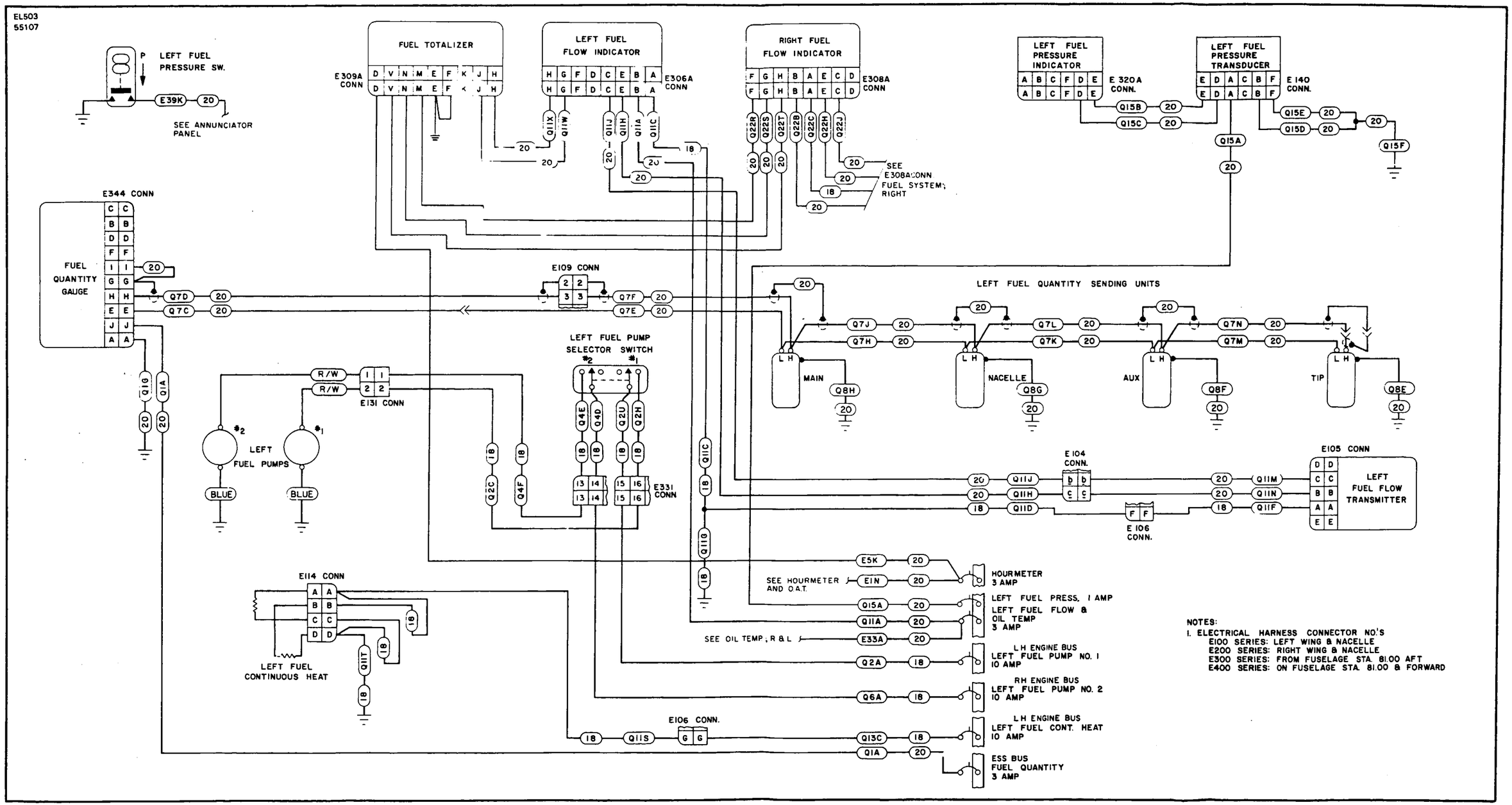

Figure 15-90. Fuel System; Left,
PA-31T S/N 31T-7820001 to -8020092 and PA-31T1 S/N 31T-7804001 to -8004057

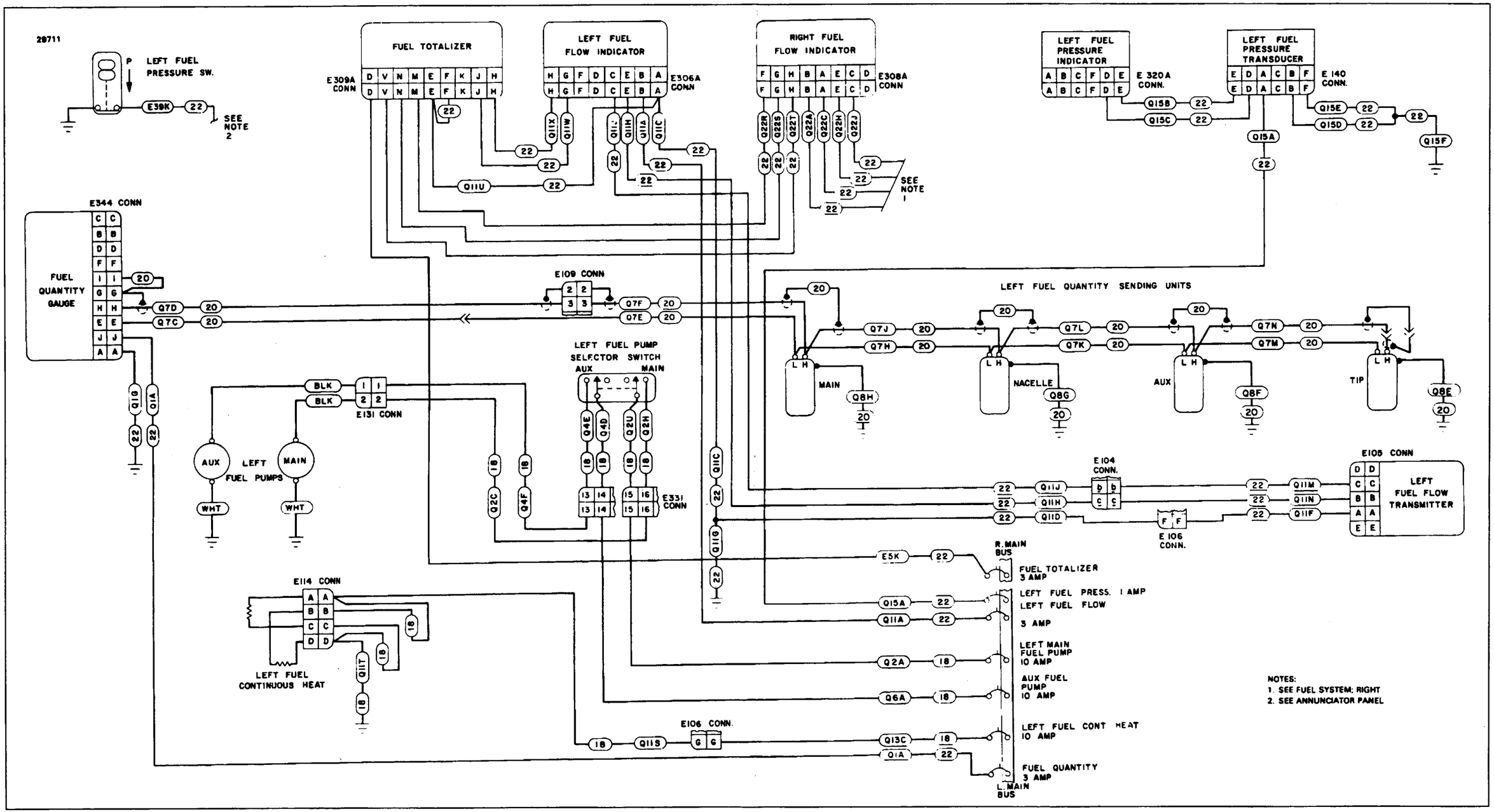

Figure 15-91. Fuel System - Left,
PA-31T S/N 31T-8120001 & up and PA-31T1 S/N 31T-8104001 & up

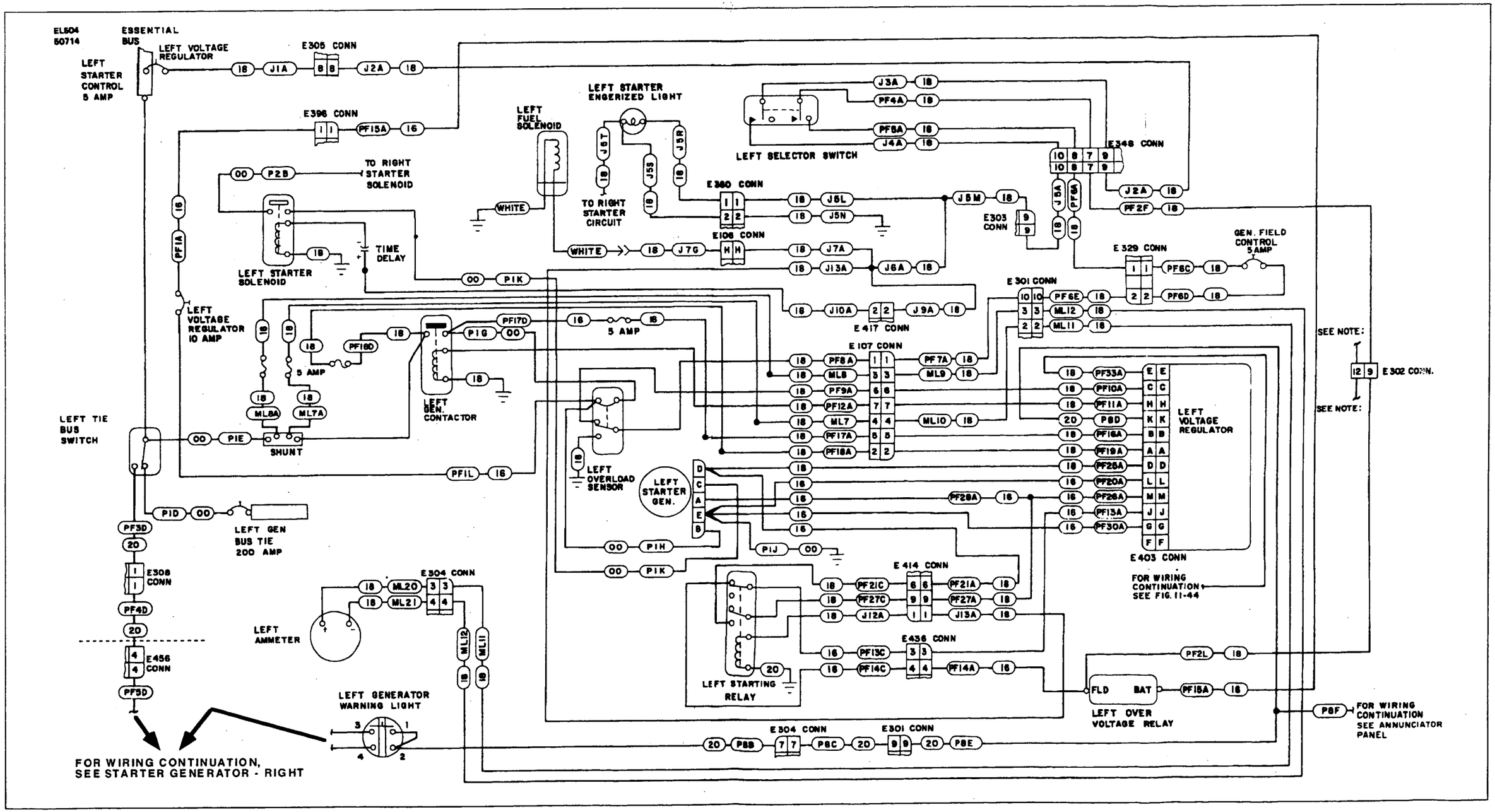

Figure 15-92. Starter Generator - Left.
PA-31T S/N 31T-7400002 to -7720007

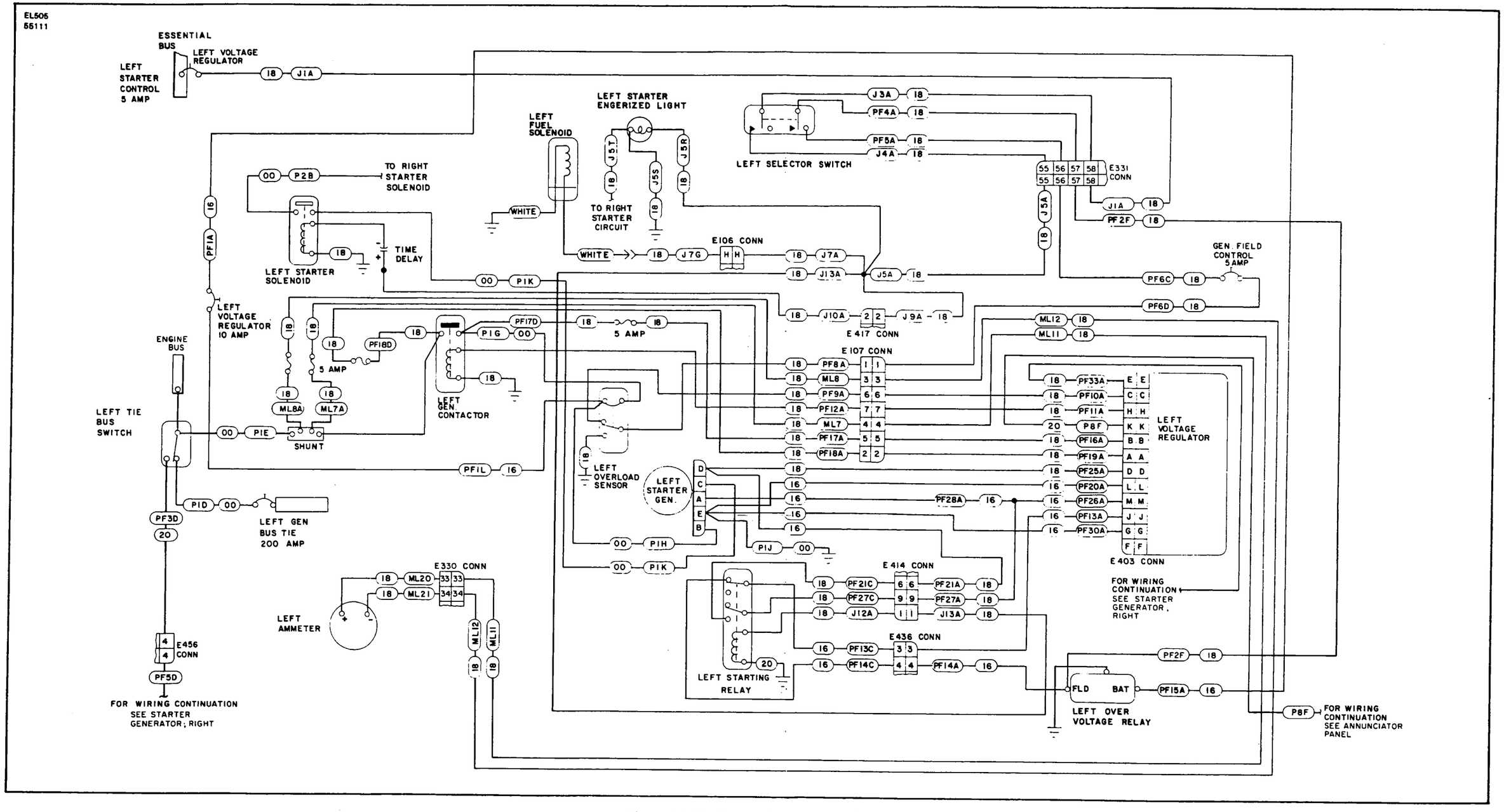

Figure 15-93. Starter Generator; Left, PA-31T S/N 31T-7720008 to 7720069

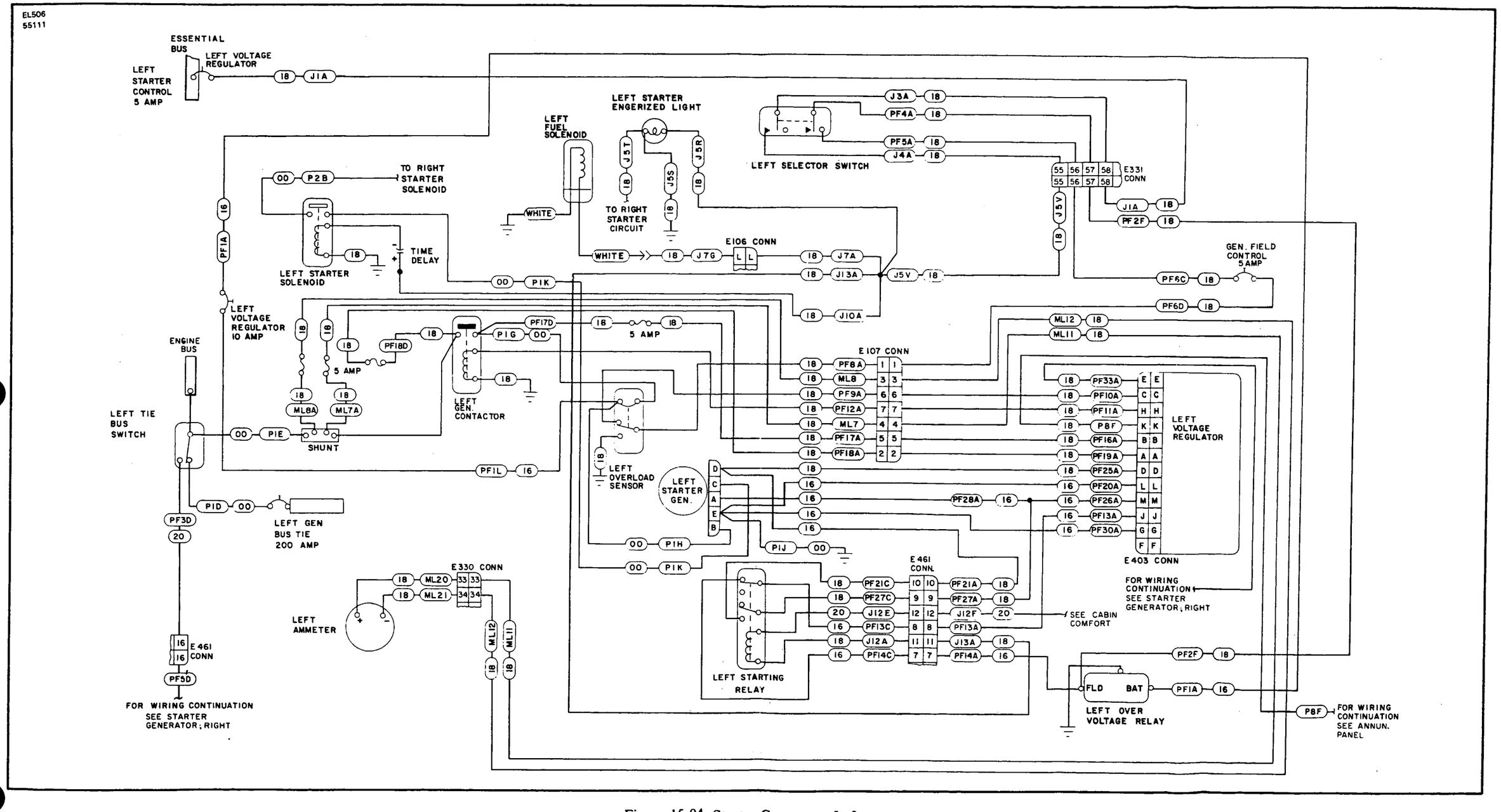

Figure 15-94. Starter Generator; Left,
PA-31T S/N 31T-7820001 to 7920094 and PA-31T1 S/N 31T-7804001 to 7904057

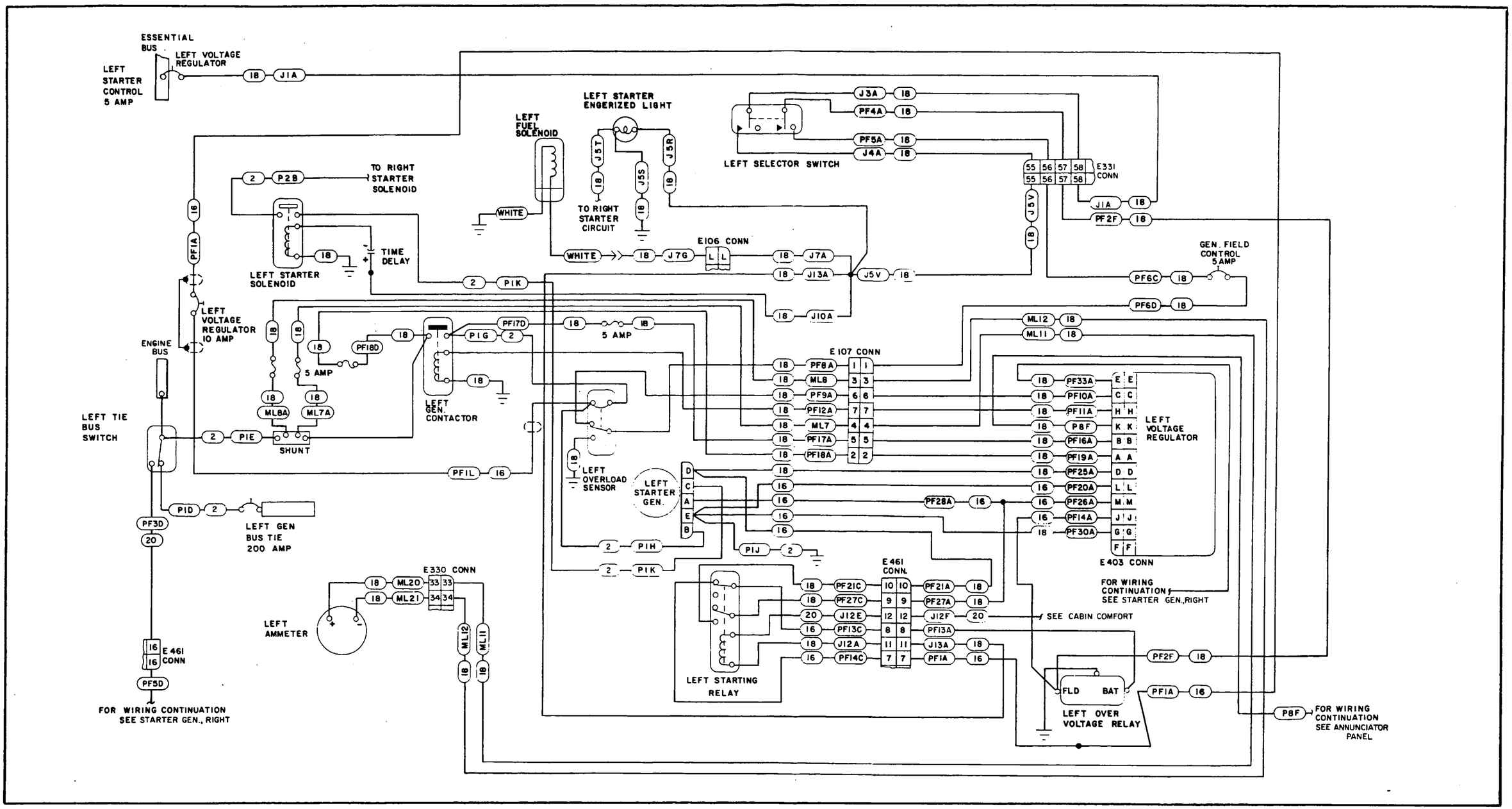

Figure 15-95. Starter Generator; Left,
PA-31T S/N 31T-8020001 to -8020092 and PA-31T1 S/N 31T-8004001 to -8004057

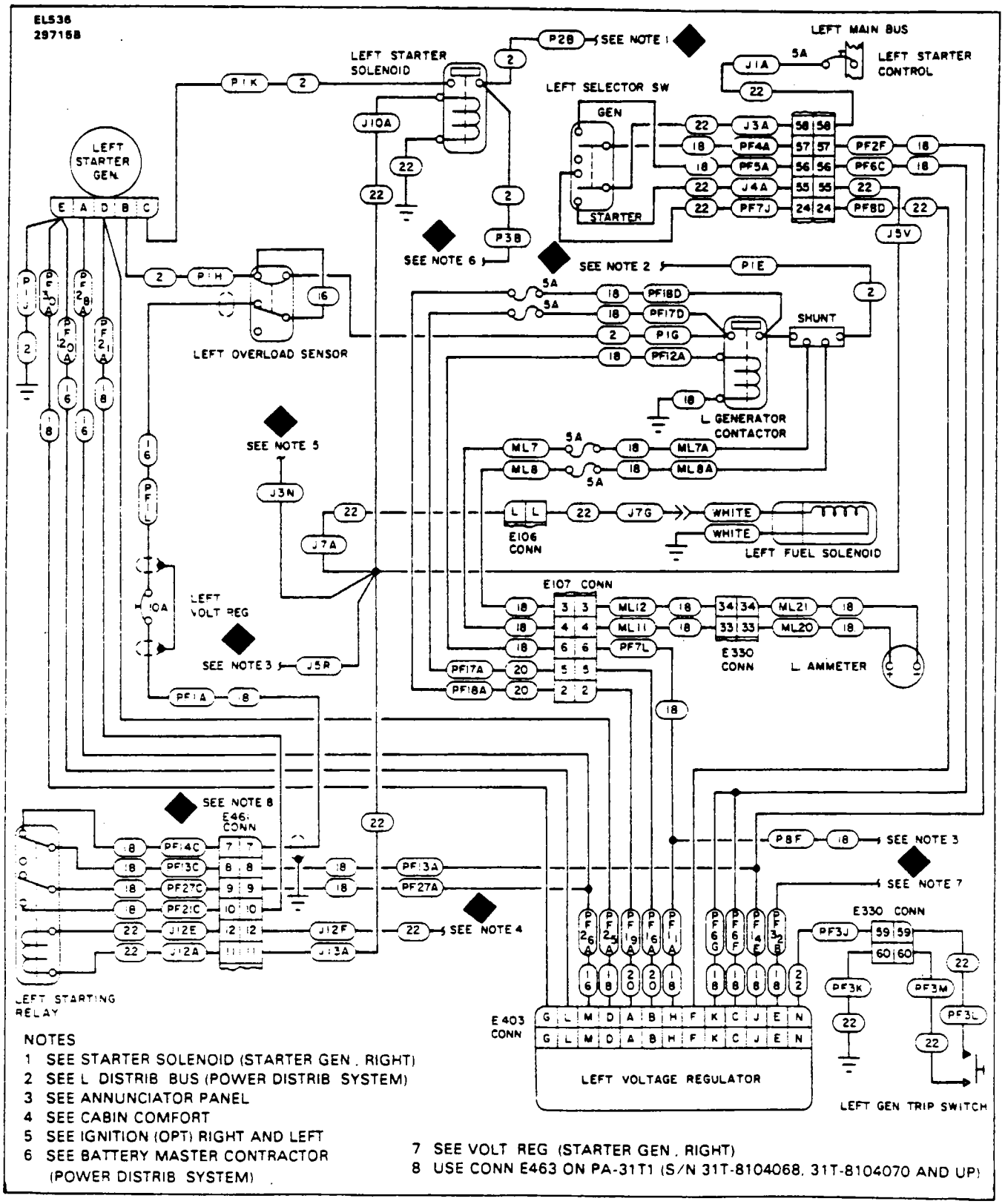

Figure 15-96. Starter Generator; Left,
PA-31T S/N 31T-8120001 and up and PA-31T1 S/N 31T-8104001 and up

INTENTIONALLY LEFT BLANK

7E12

THIS PAGE INTENTIONALLY LEFT BLANK

THIS PAGE INTENTIONALLY LEFT BLANK

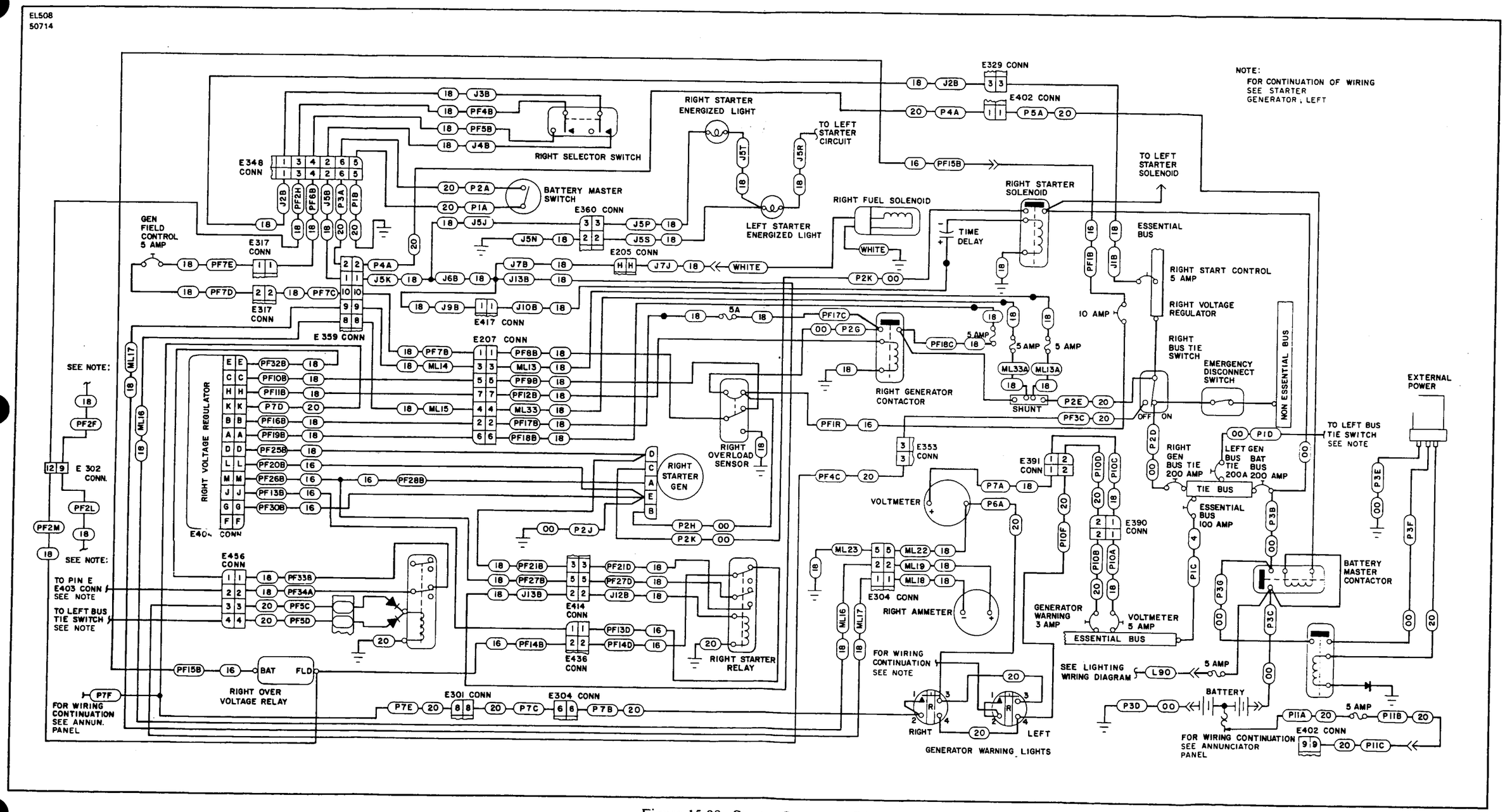

Figure 15-98. Starter Generator; Right, PA-31T S/N 31T-7400002 to -7720007

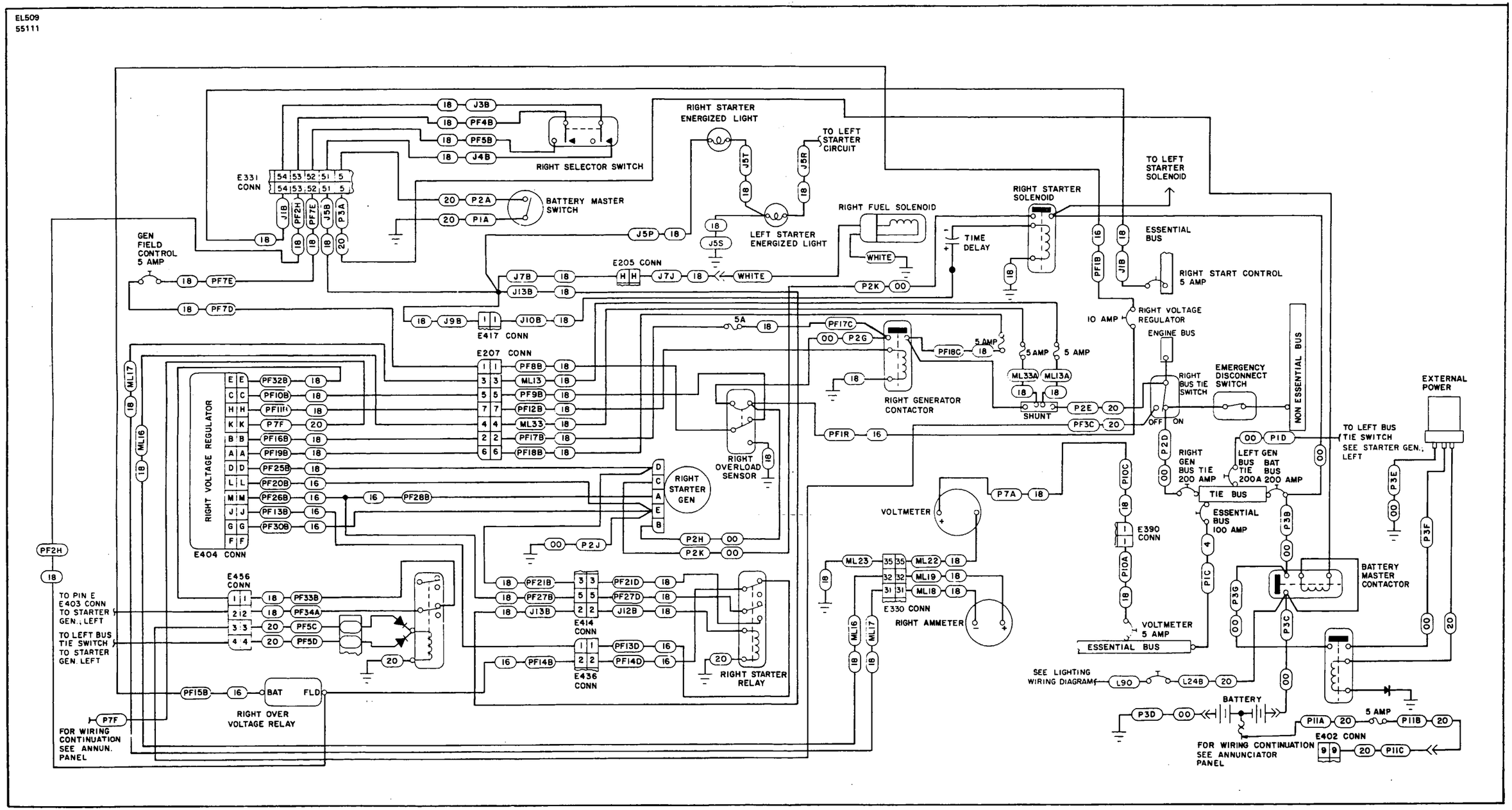

Figure 15-99. Starter Generator; Right.
PA-31T S/N 31T-7720008 to 7720069

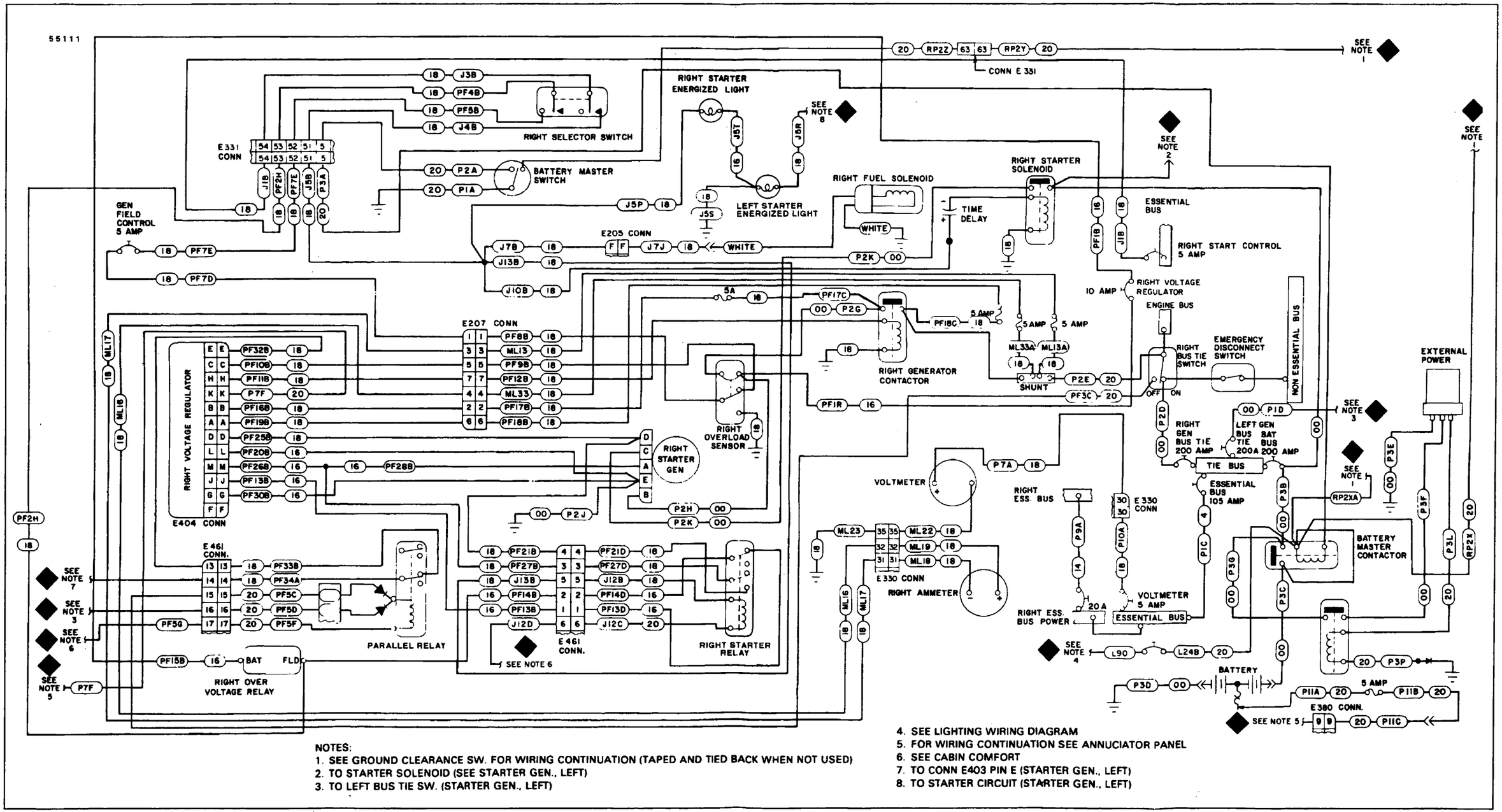

Figure 15-100. Starter Generator - Right,
PA-31T S/N 31T-7820001 to -7920094 and PA-31T1 S/N 31T-7804001 to -7904057

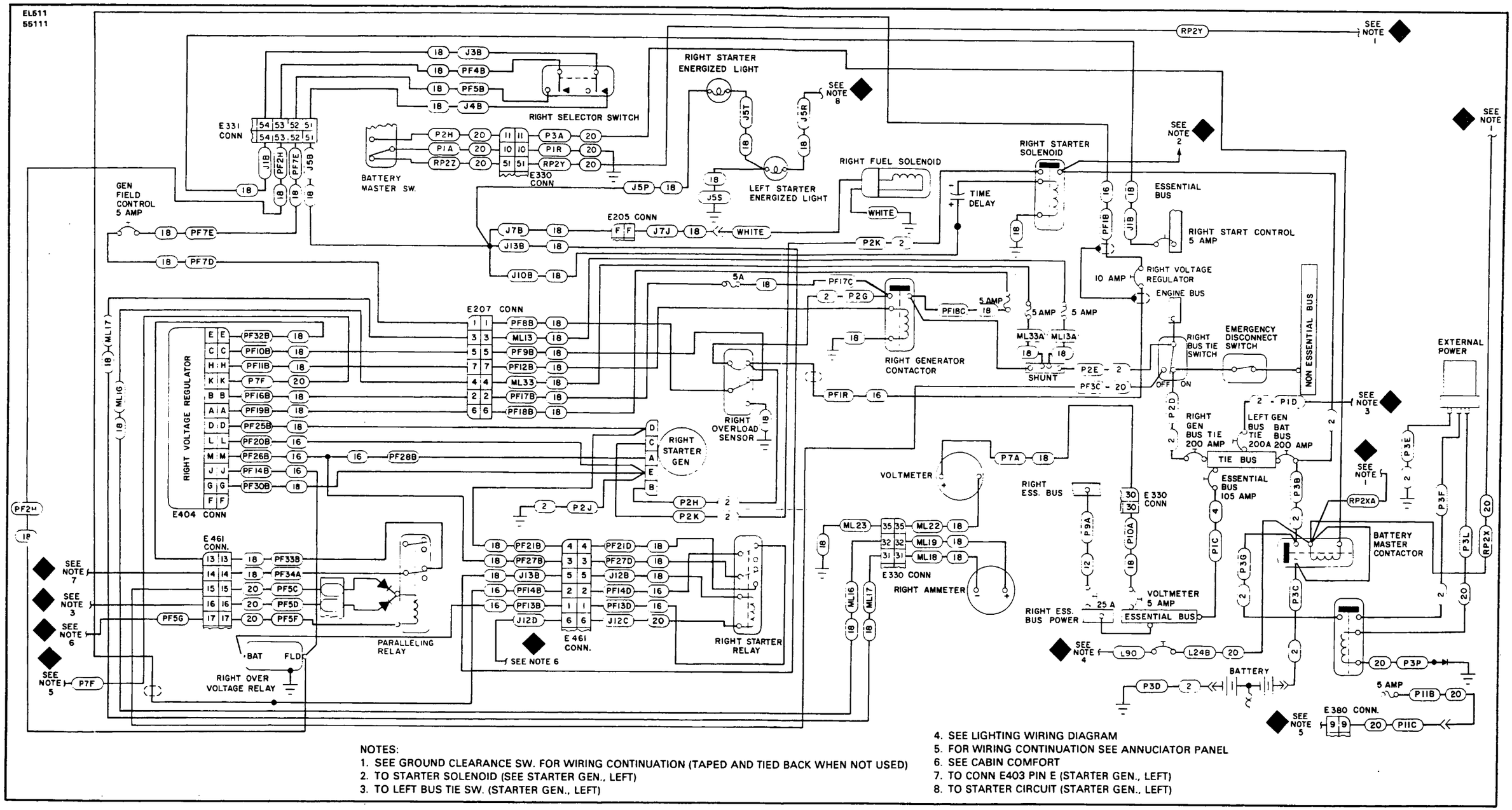

NOTES:
1. SEE GROUND CLEARANCE SW. FOR WIRING CONTINUATION (TAPED AND TIED BACK WHEN NOT USED)
2. TO STARTER SOLENOID (SEE STARTER GEN., LEFT)
3. TO LEFT BUS TIE SW. (STARTER GEN., LEFT)
4. SEE LIGHTING WIRING DIAGRAM
5. FOR WIRING CONTINUATION SEE ANNUCIATOR PANEL
6. SEE CABIN COMFORT
7. TO CONN E403 PIN E (STARTER GEN., LEFT)
8. TO STARTER CIRCUIT (STARTER GEN., LEFT)

Figure 15-101. Starter Generator; Right,
PA-31T S/N 31T-8020001 to -8020092 and PA-31T1 S/N 31T-8004001 to -8004057

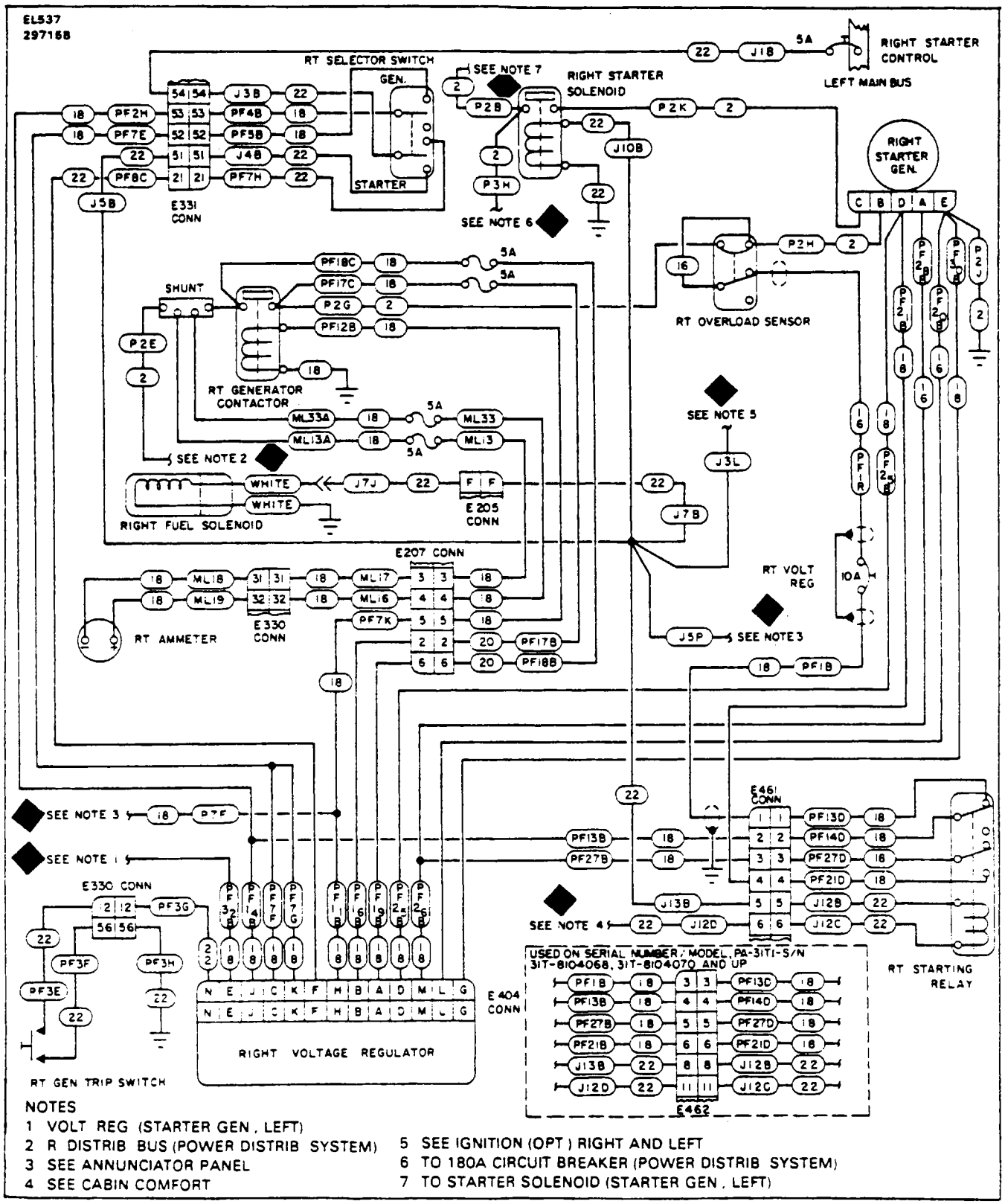

NOTES

1 VOLT REG (STARTER GEN, LEFT)
2 R DISTRIB BUS (POWER DISTRIB SYSTEM)
3 SEE ANNUNCIATOR PANEL
4 SEE CABIN COMFORT
5 SEE IGNITION (OPT) RIGHT AND LEFT
6 TO 180A CIRCUIT BREAKER (POWER DISTRIB SYSTEM)
7 TO STARTER SOLENOID (STARTER GEN, LEFT)

Figure 15-102. Starter Generator; Right, PA-31T S/N 31T-8120001 and up and PA-31T1 S/N 31T-8104001 and up

INTENTIONALLY LEFT BLANK

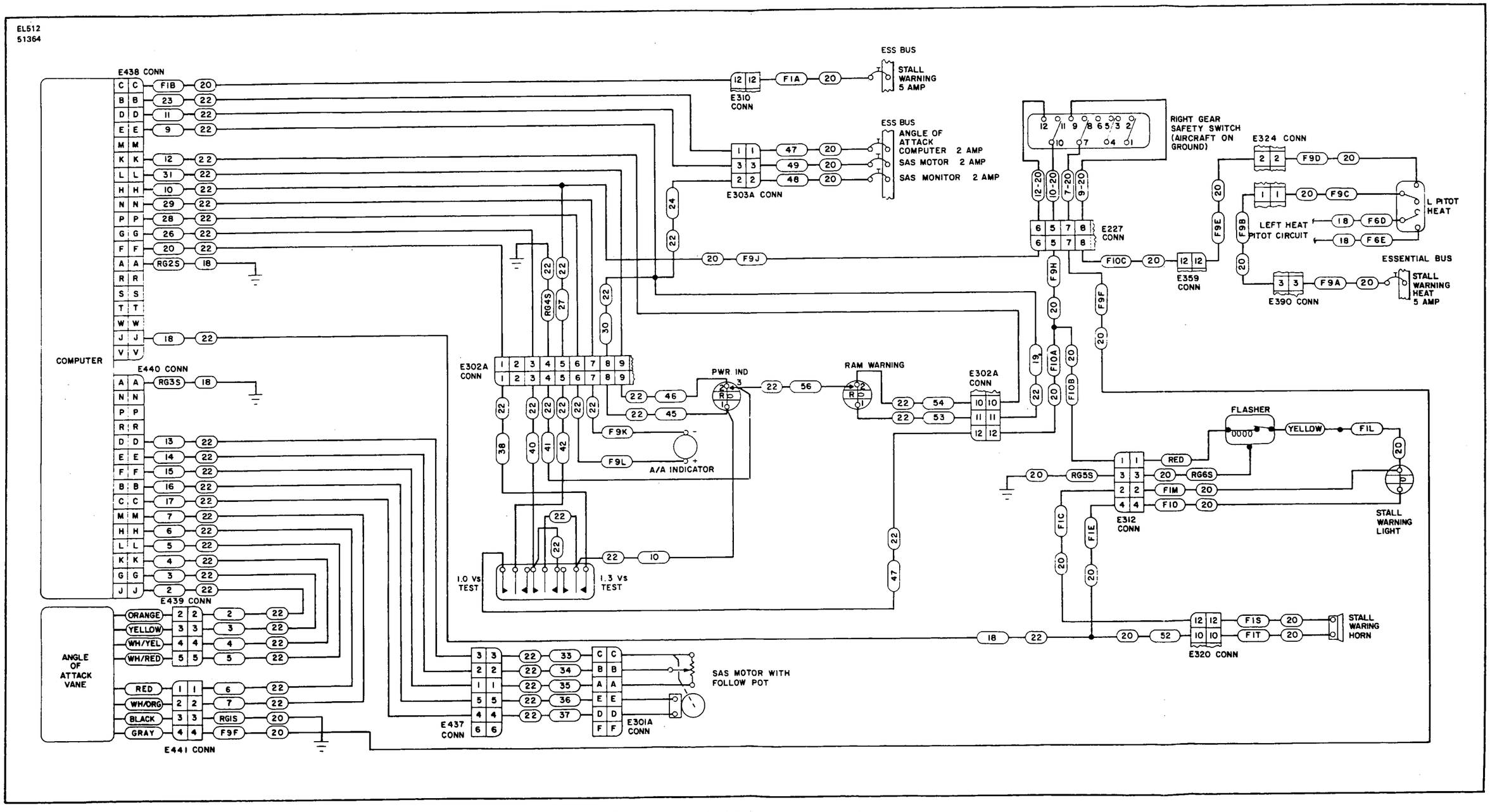

Figure 15-103. Stability Augmentation System, PA-31T S/N 31T-7400002 to 7720007

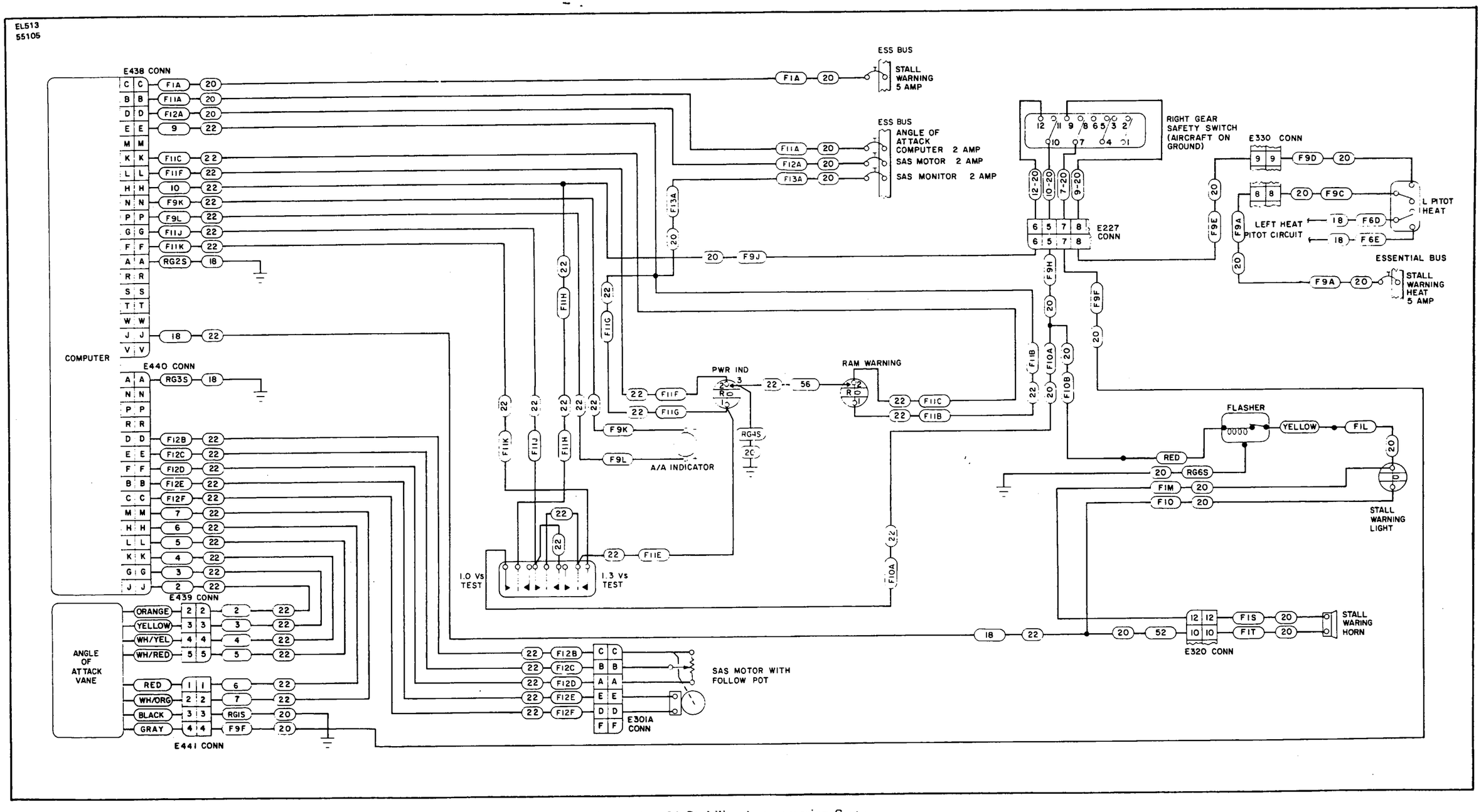

Figure 15-104. Stability Augmentation System, PA-31T S/N 31T-7720008 to 7720069

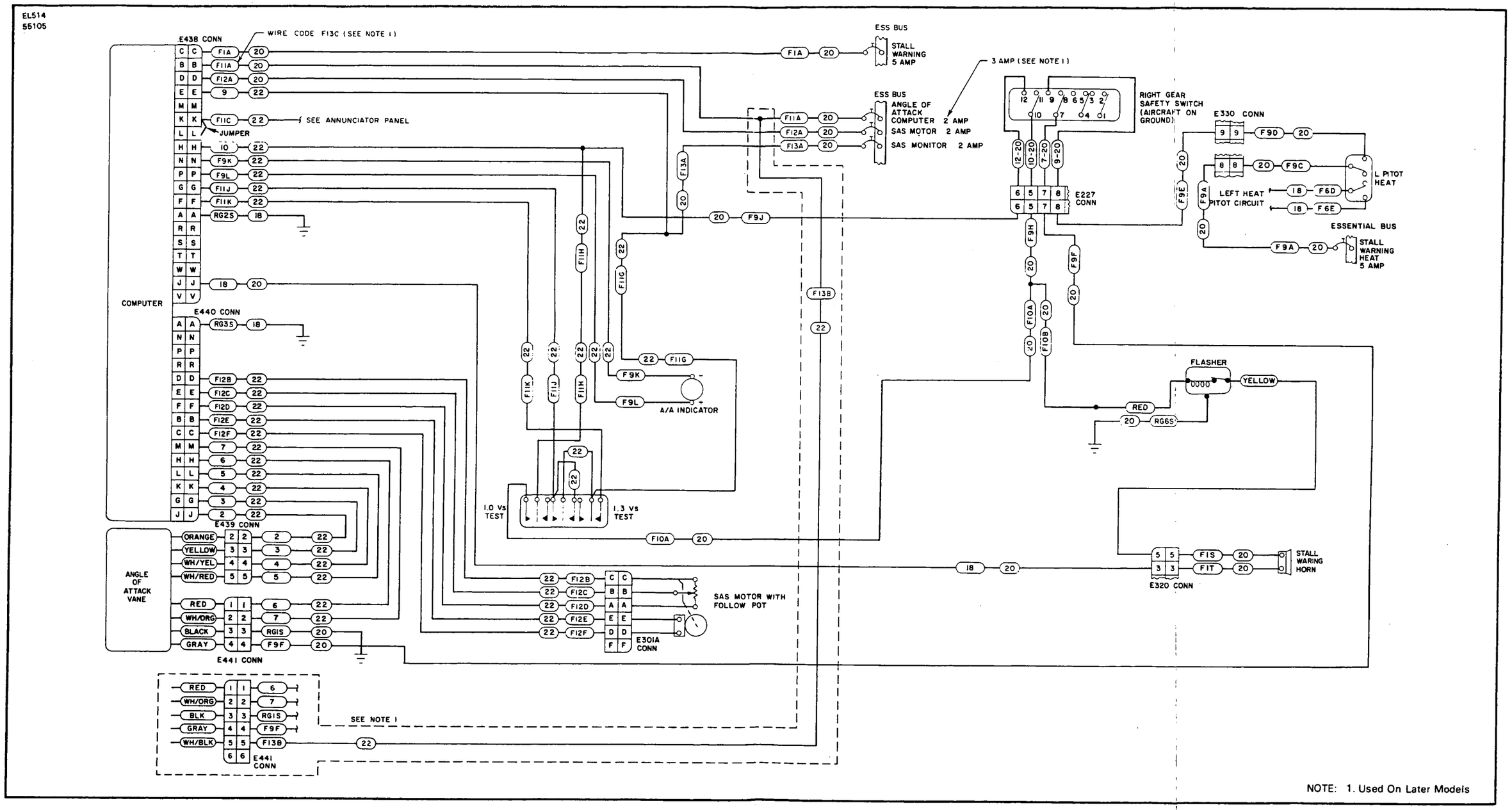

NOTE: 1. Used On Later Models

Figure 15-105. Stability Augmentation System, PA-31T S/N 31T-7820001 to -8020092

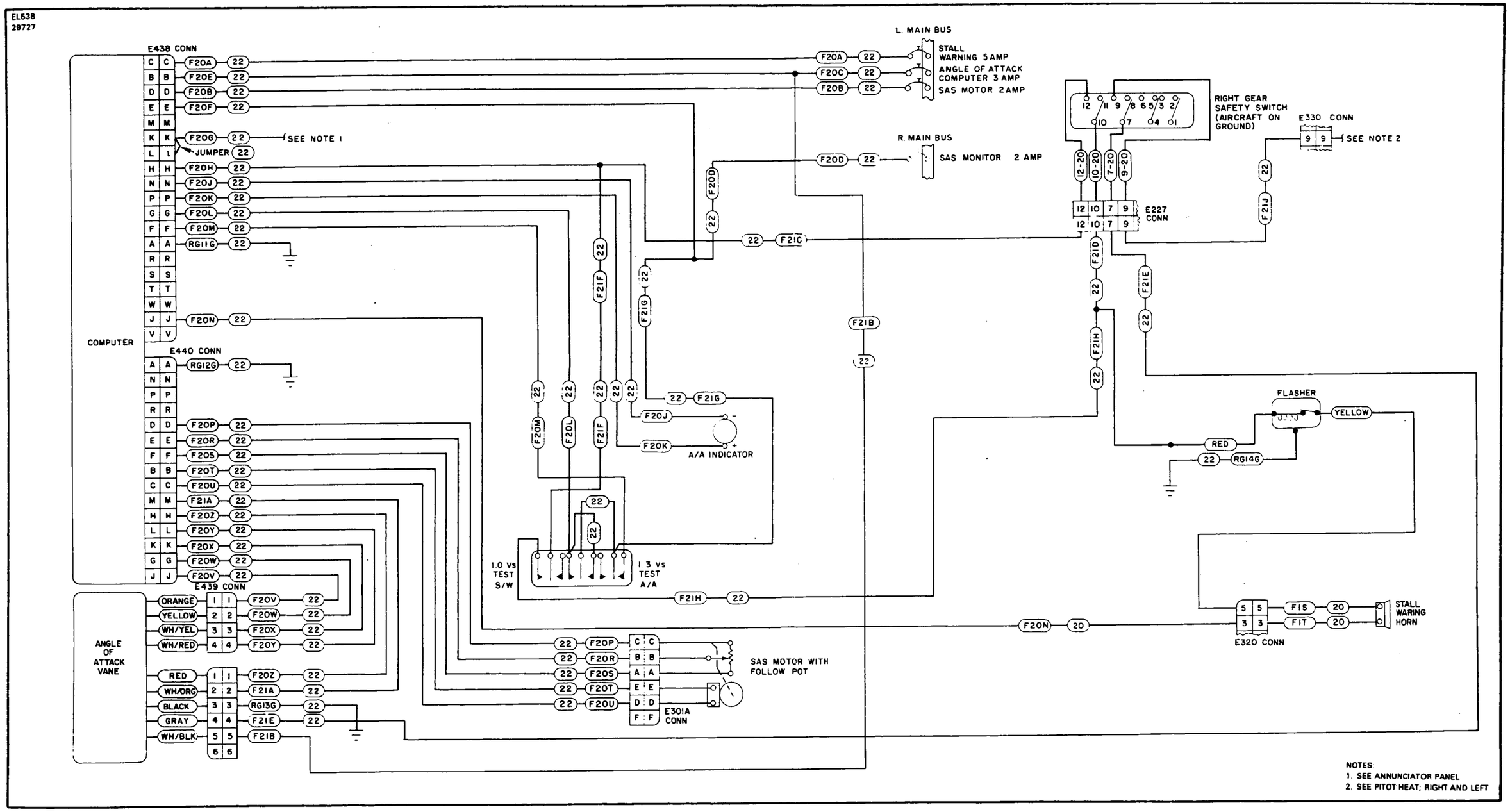

Figure 15-106. Stability Augmentation System, PA-31T S/N 31T-8120001 and up

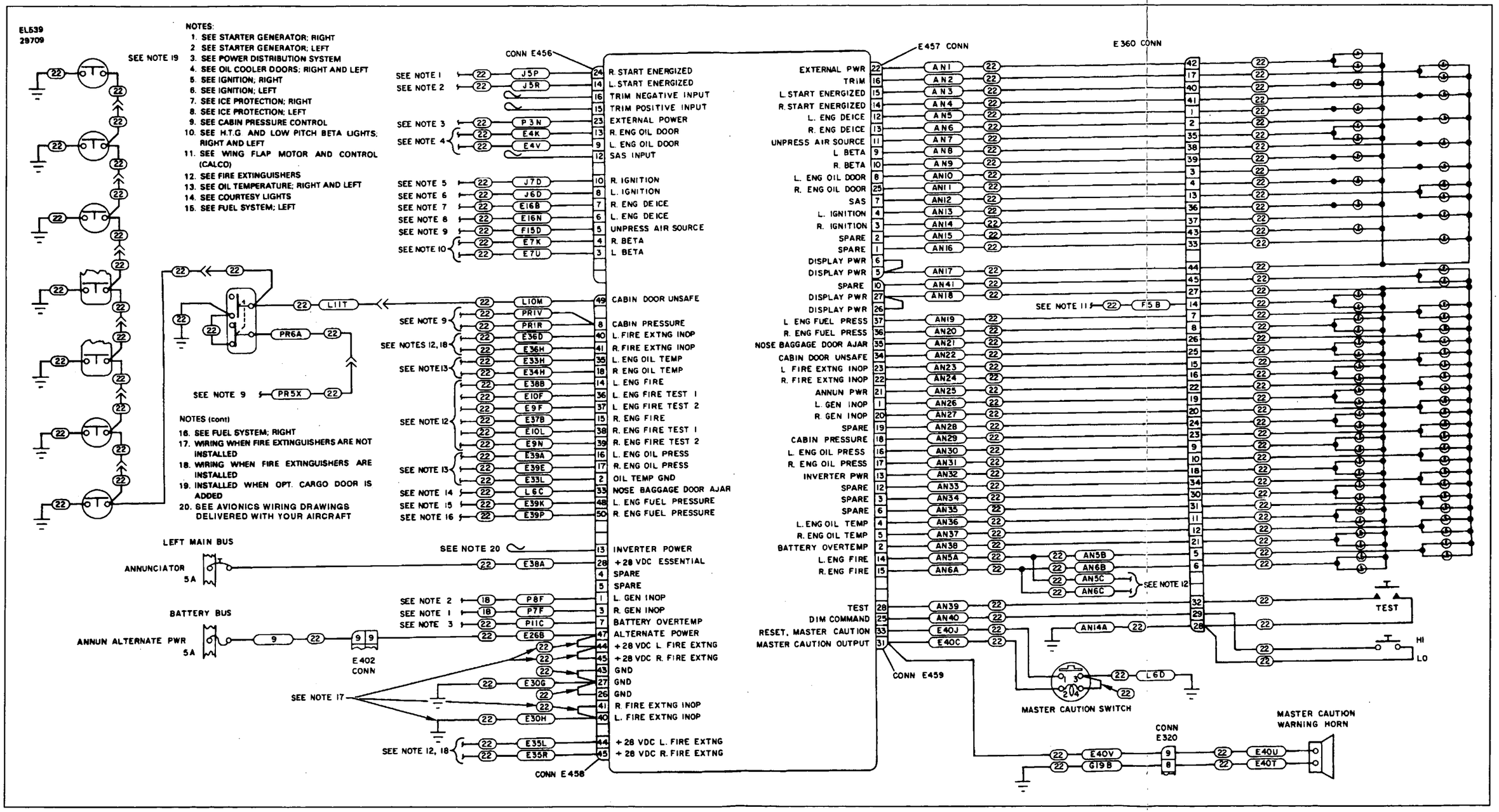

Figure 15-107. Annunciator Panel,
PA-31T S/N 31T-8120001 & up and PA-31T1 S/N 31T-8104001 to -8104067 & -8104069

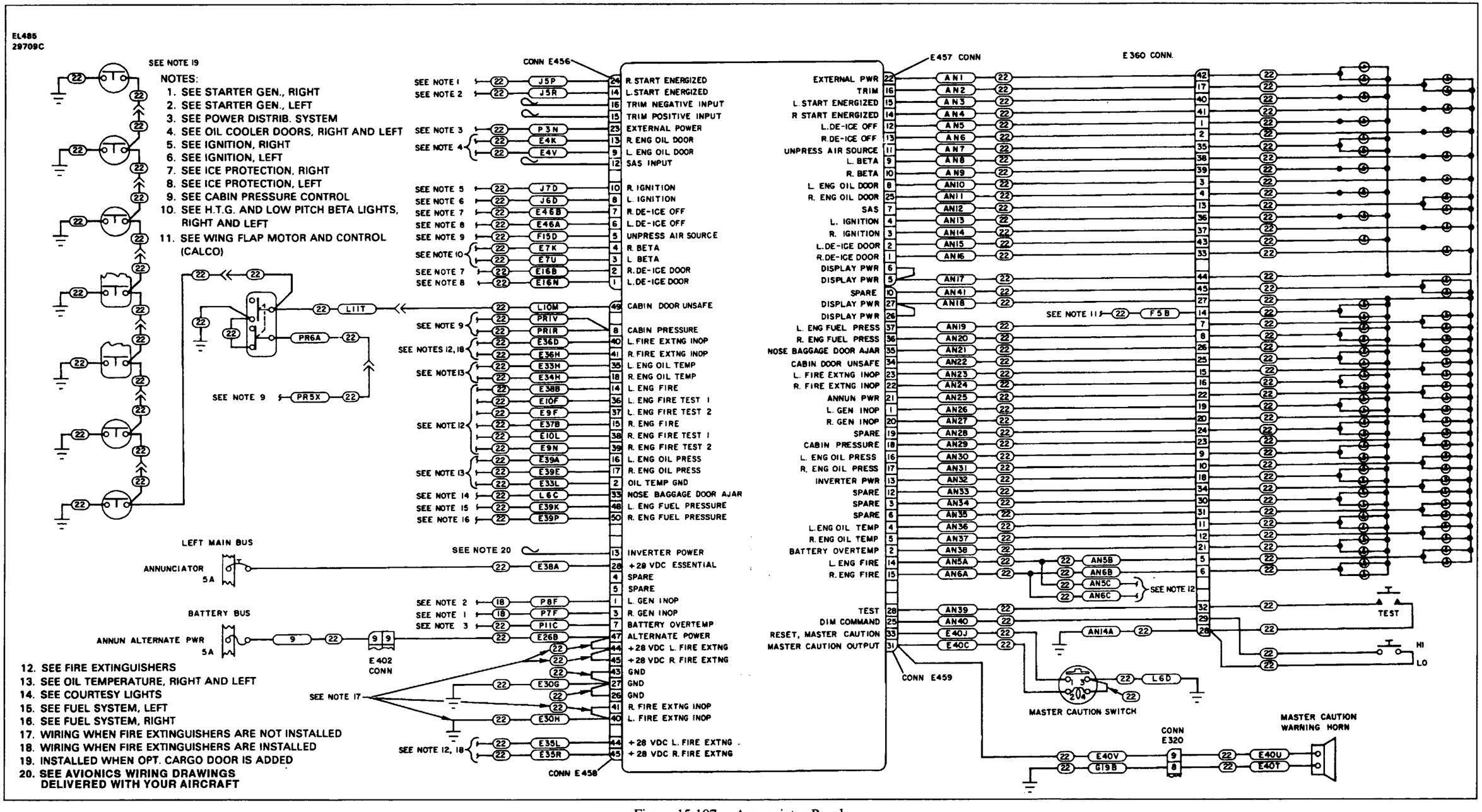

Figure 15-107a. Annunciator Panel,
PA-31T1 S/N 31T-8104068 and 31T-8104070 & up

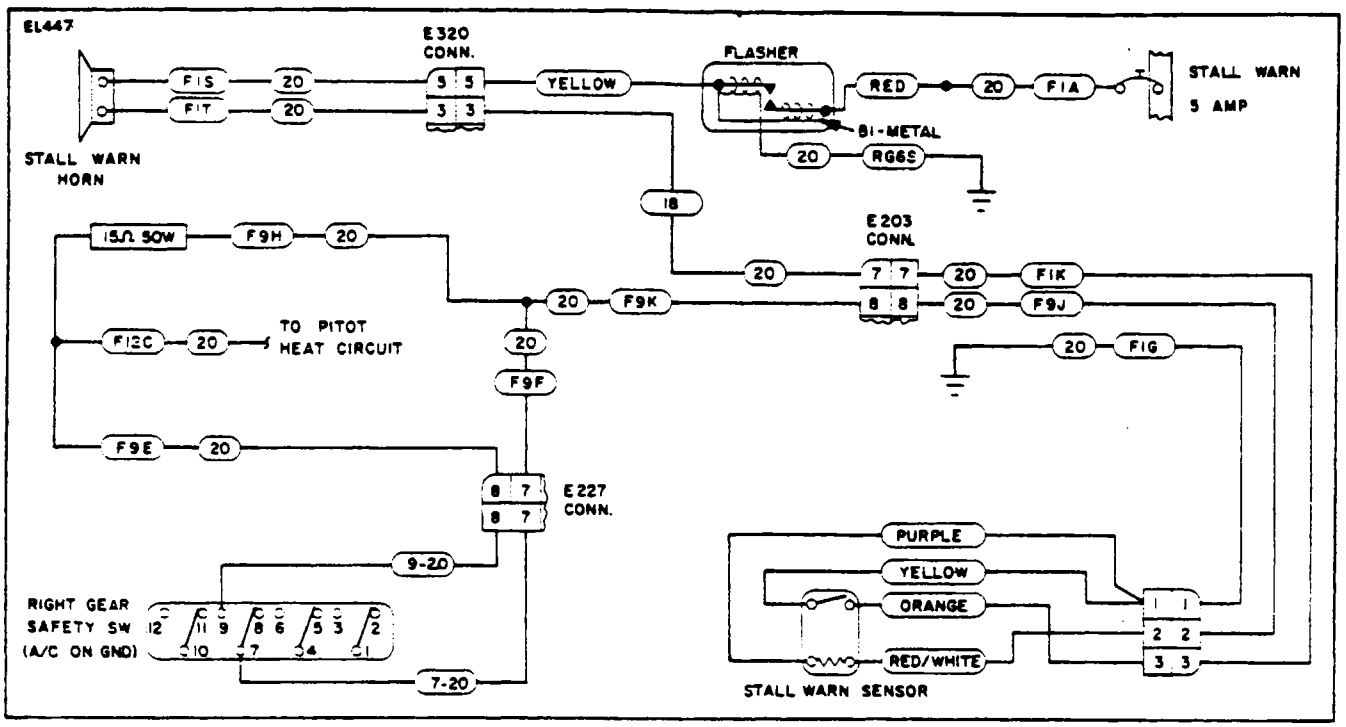

Figure 15-108. Stall Warning,
PA-31T1 S/N 31T-7804001 to 7904057

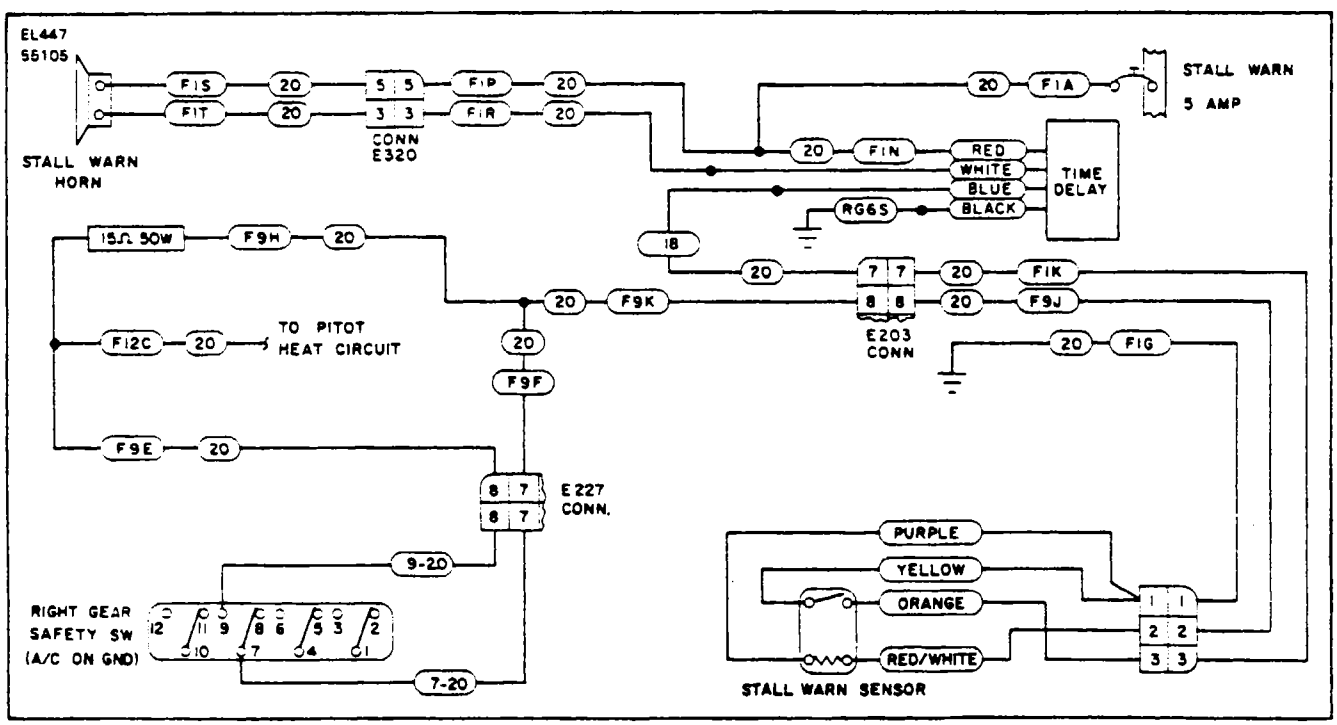

Figure 15-109. Stall Warning (With Time Delay),
PA-31T1 S/N 31T-8004001 to -8004057

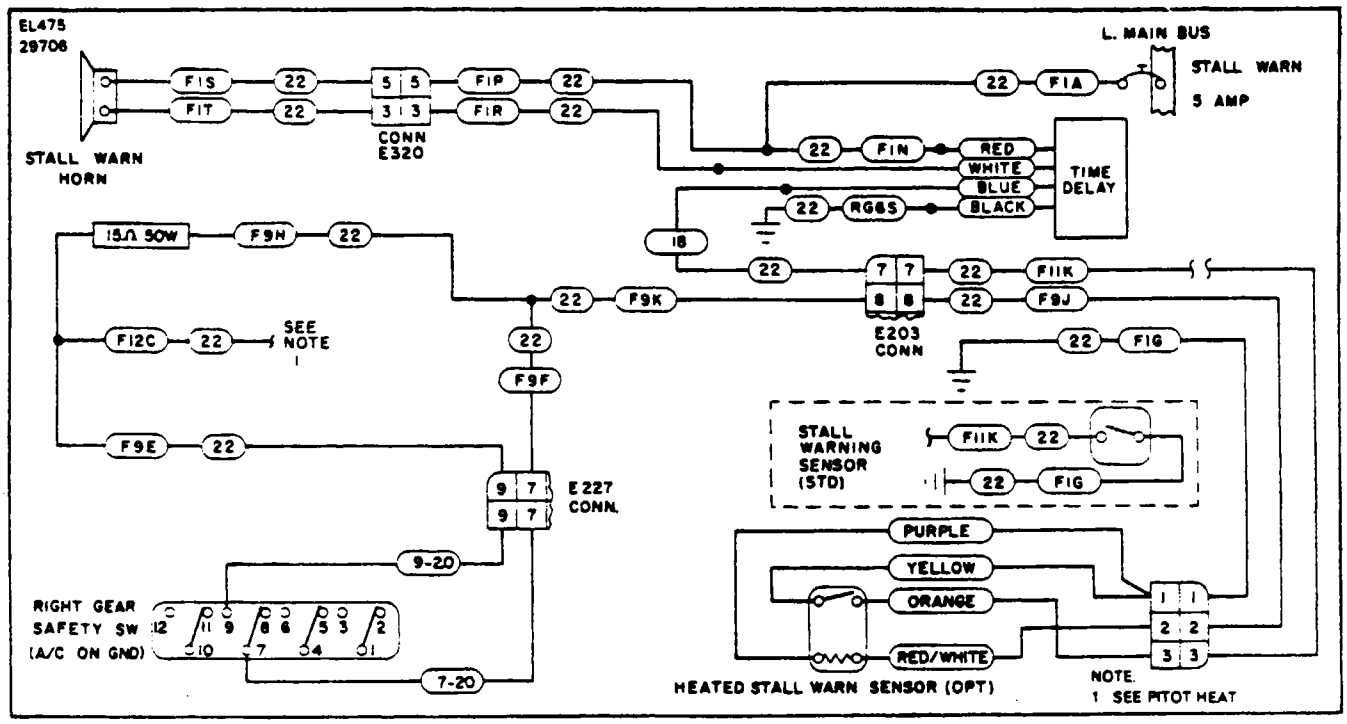

Figure 15-110. Stall Warning (With Time Delay), PA-31T1 S/N 31T-8104001 to 8104067 and include S/N 8104069

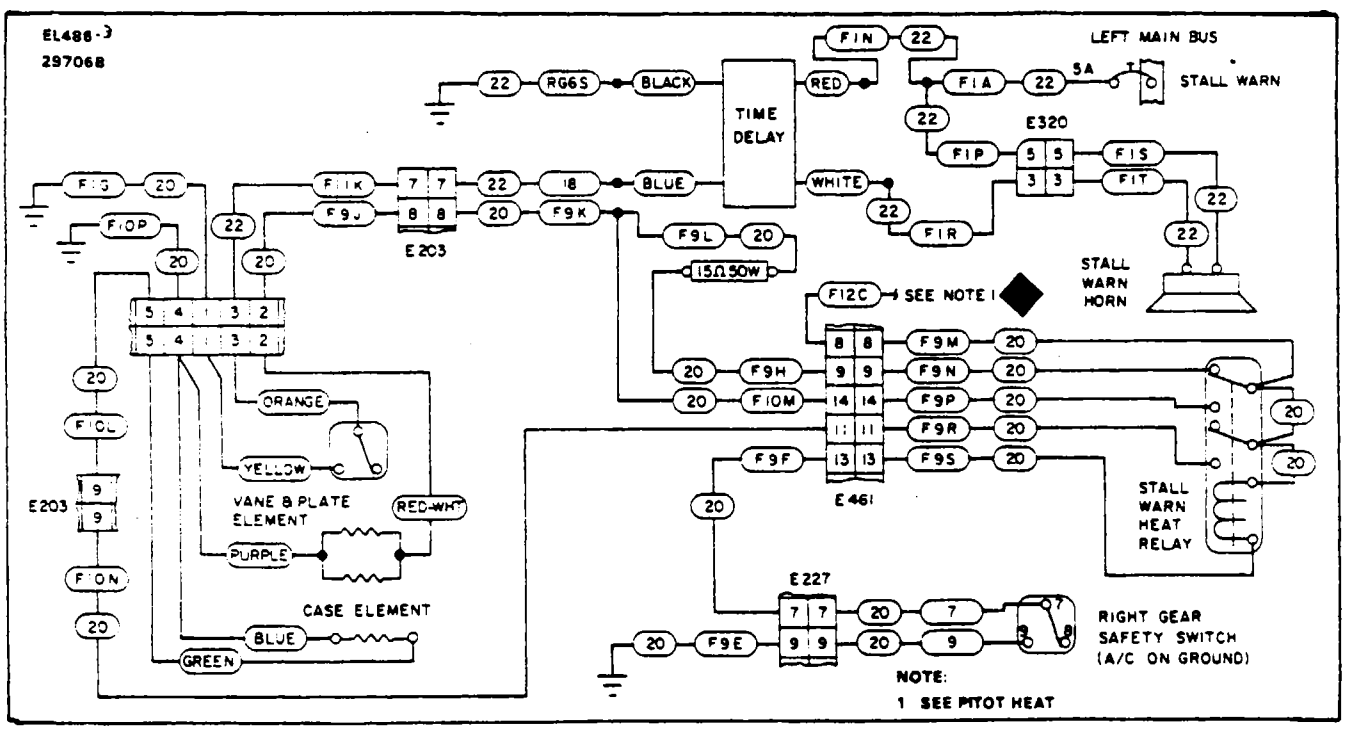

Figure 15-110a. Stall Warning (with Time Delay) PA-31T1 S/N 31T-8104068 and PA-31T1 S/N 31T-8104070 and up

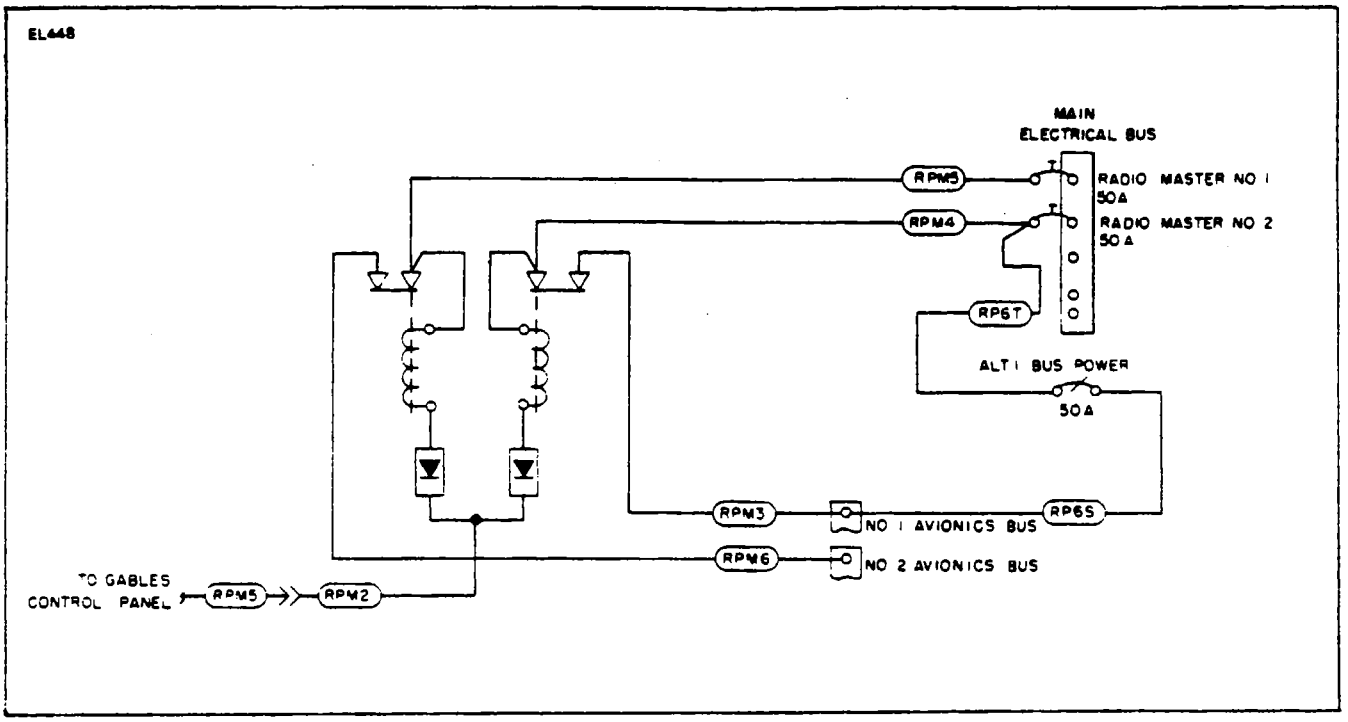

Figure 15-111. Avionics Master and Emergency Switch Circuit

INTENTIONALLY LEFT BLANK

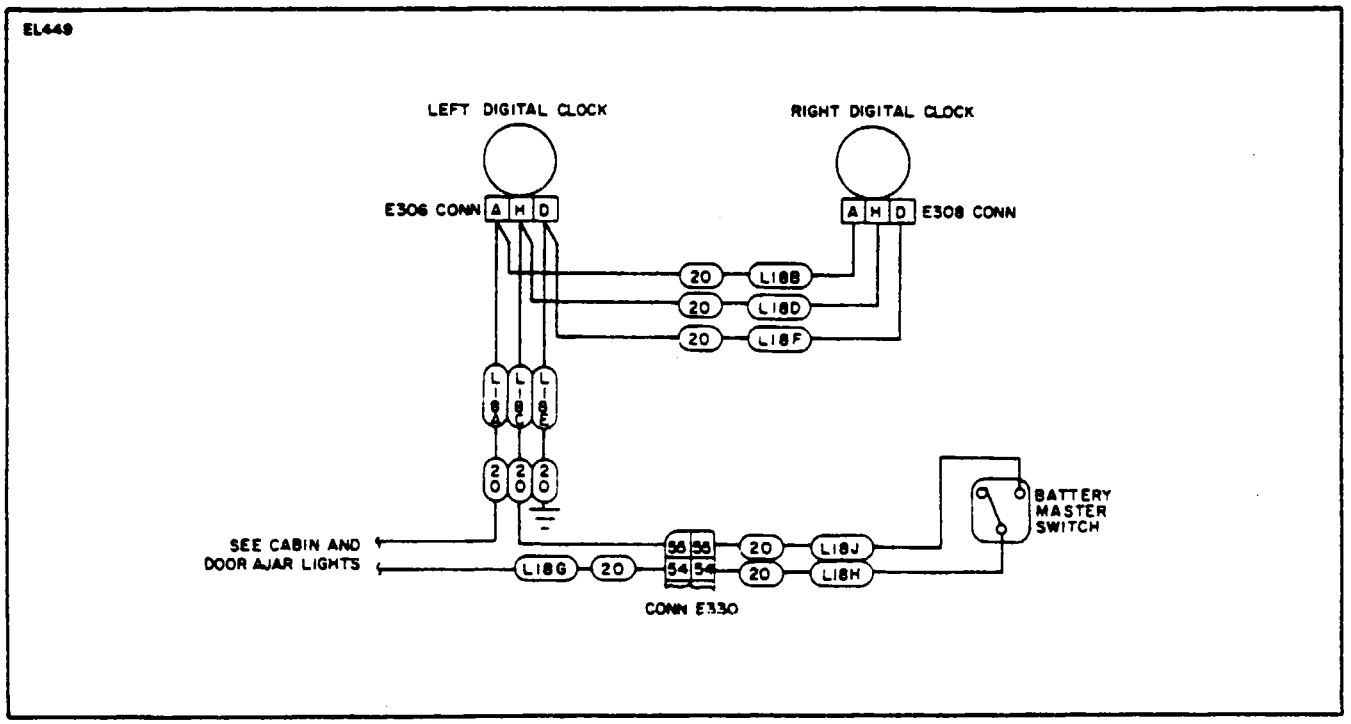

Figure 15-112. Digital Clocks,
PA-31T S/N 31T-8020001 to -8020055 and PA-31T1 S/N 31T-8004001 to -8004038

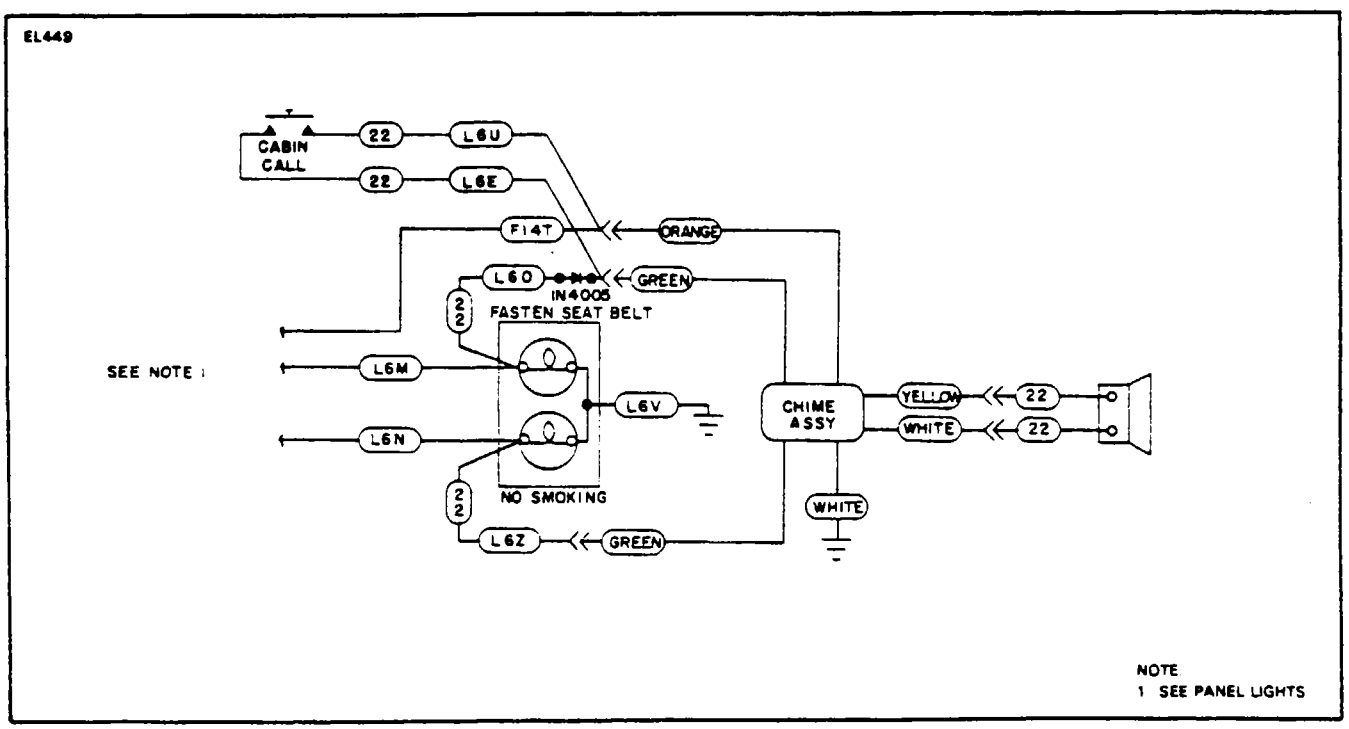

Figure 15-113. Cabin Chimes (Seat Belt, No Smoking),
PA-31T S/N 31T-8020067 and up and PA-31T1 S/N 31T-8004034 and up

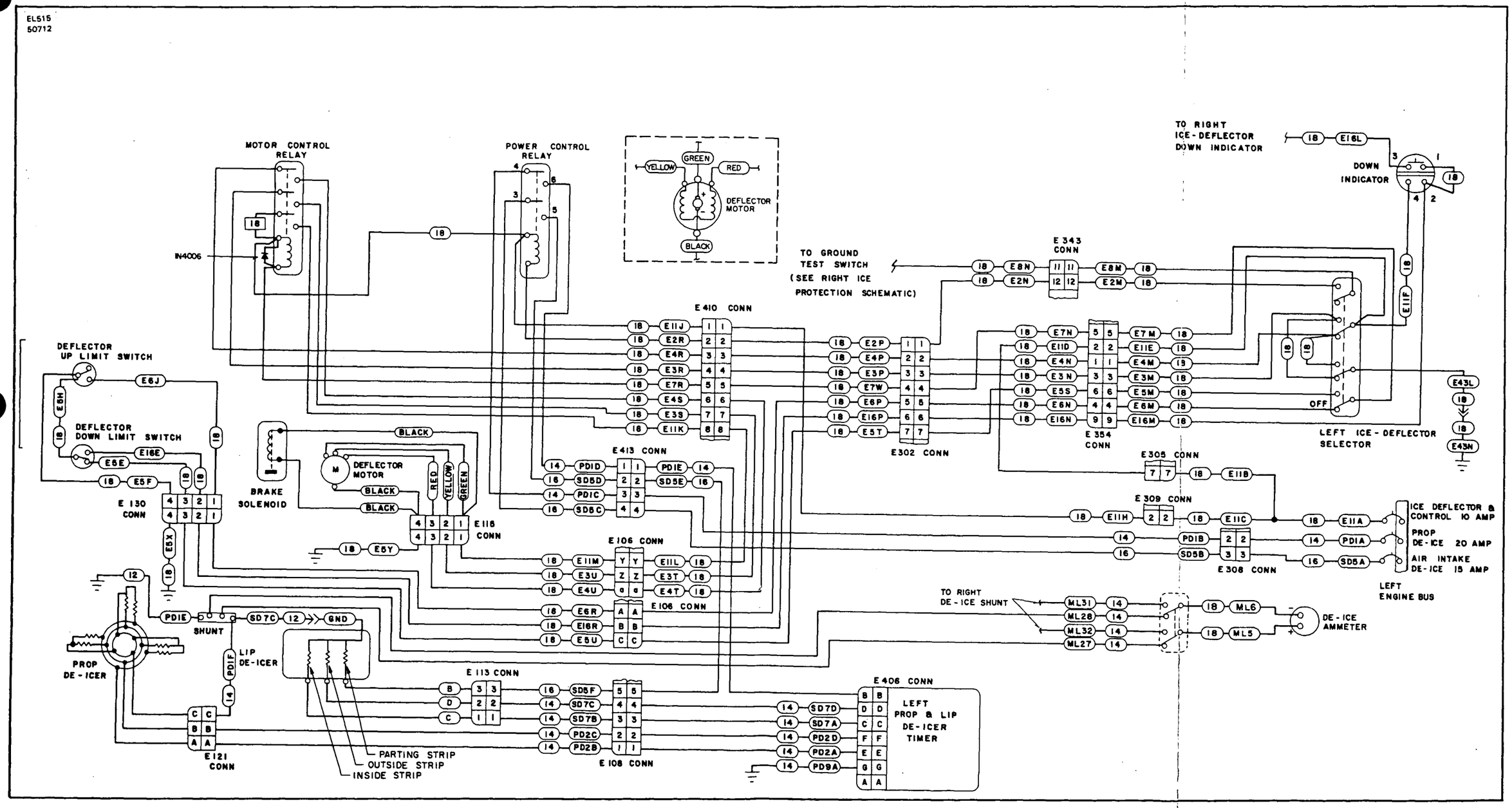

Figure 15-114.Ice Protection; Left,
PA-31T S/N 31T-7400002 to -7720007

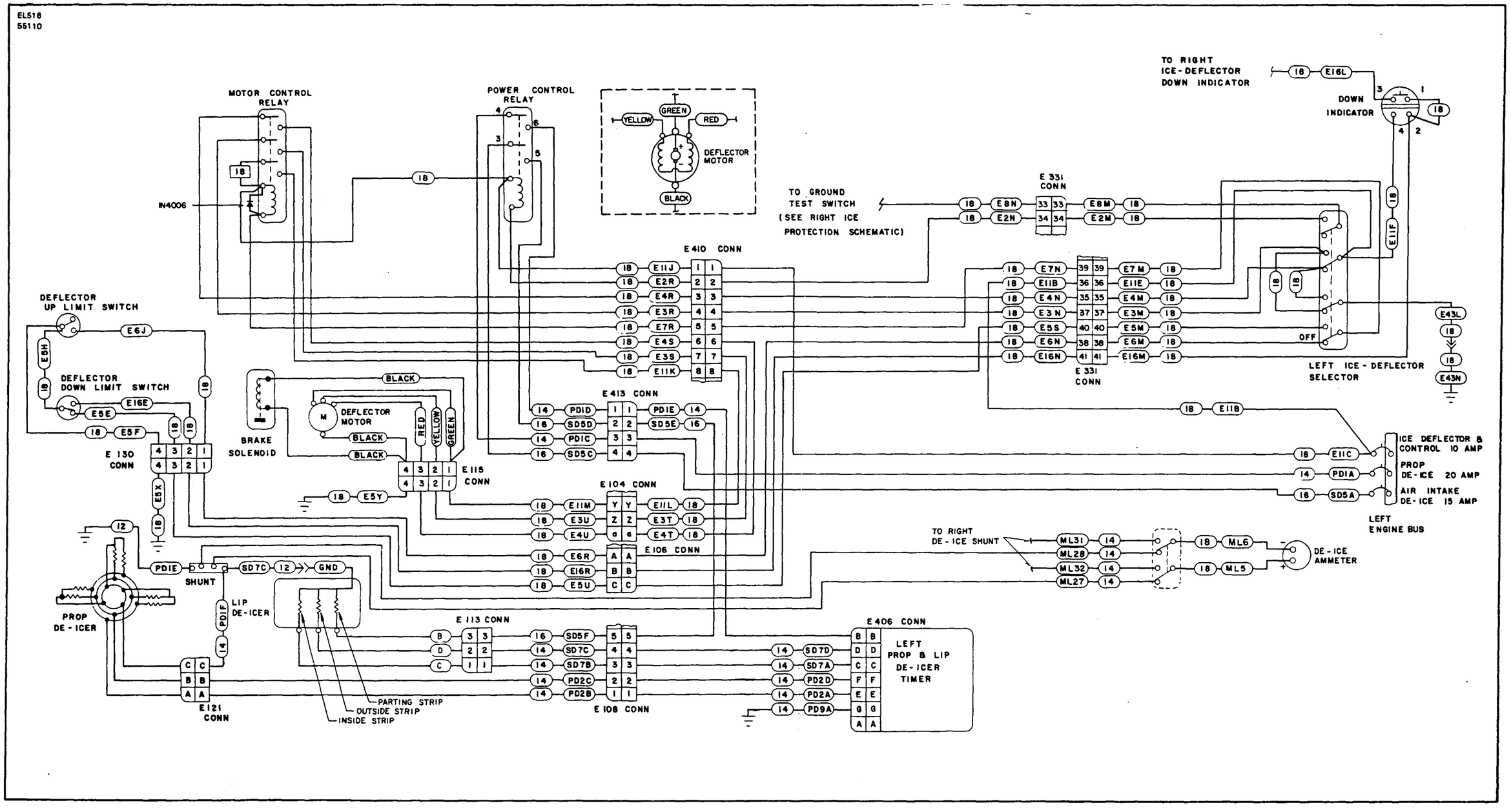

Figure 15-115. Ice Protection; Left, PA-31T S/N 31T-7720008 to -7720069

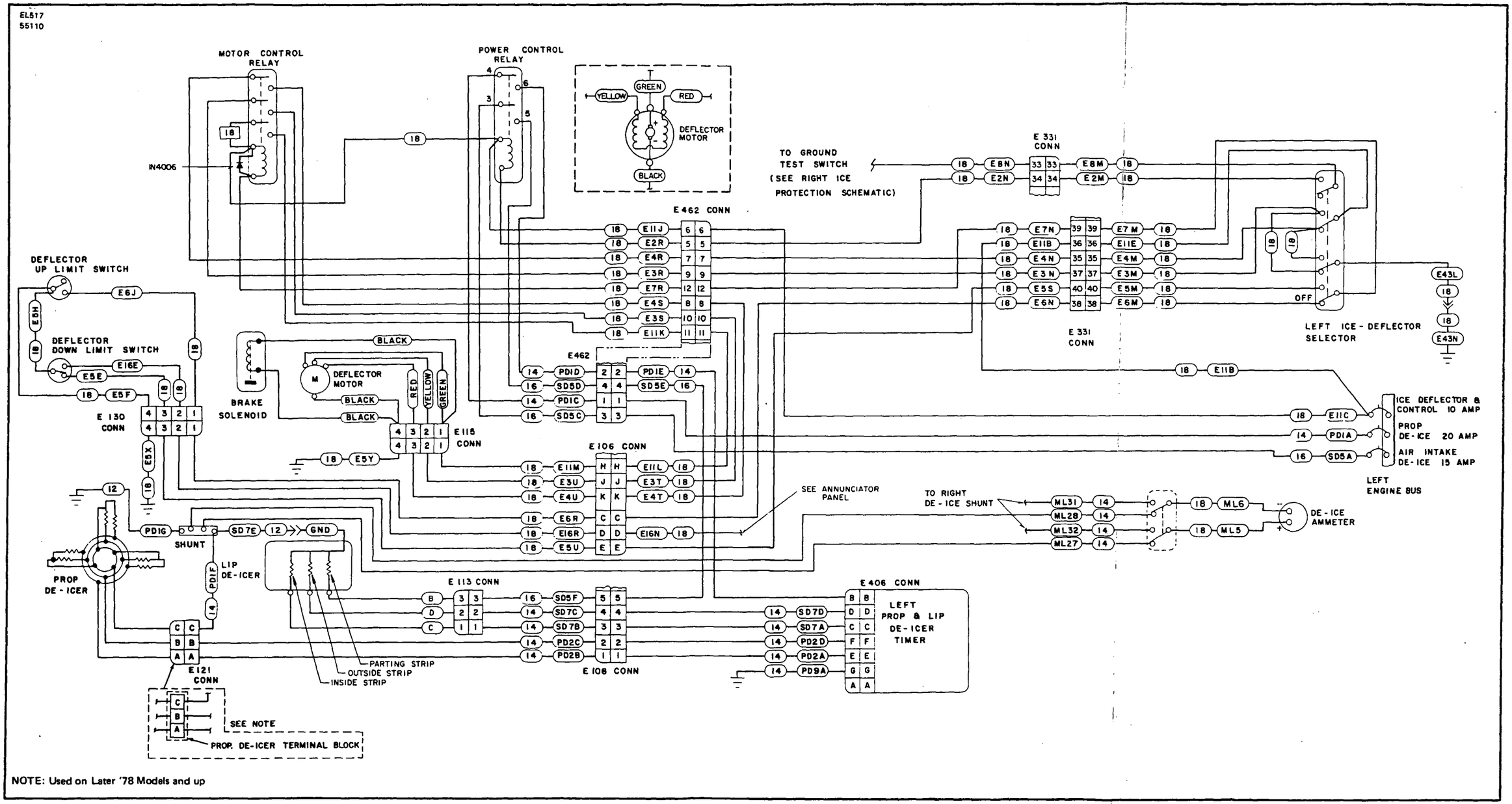

Figure 15-116. Ice Protection; Left,
PA-31T S/N 31T-7820001 to -8020092 and PA-31T1 S/N 31T-7804001 to -8004057

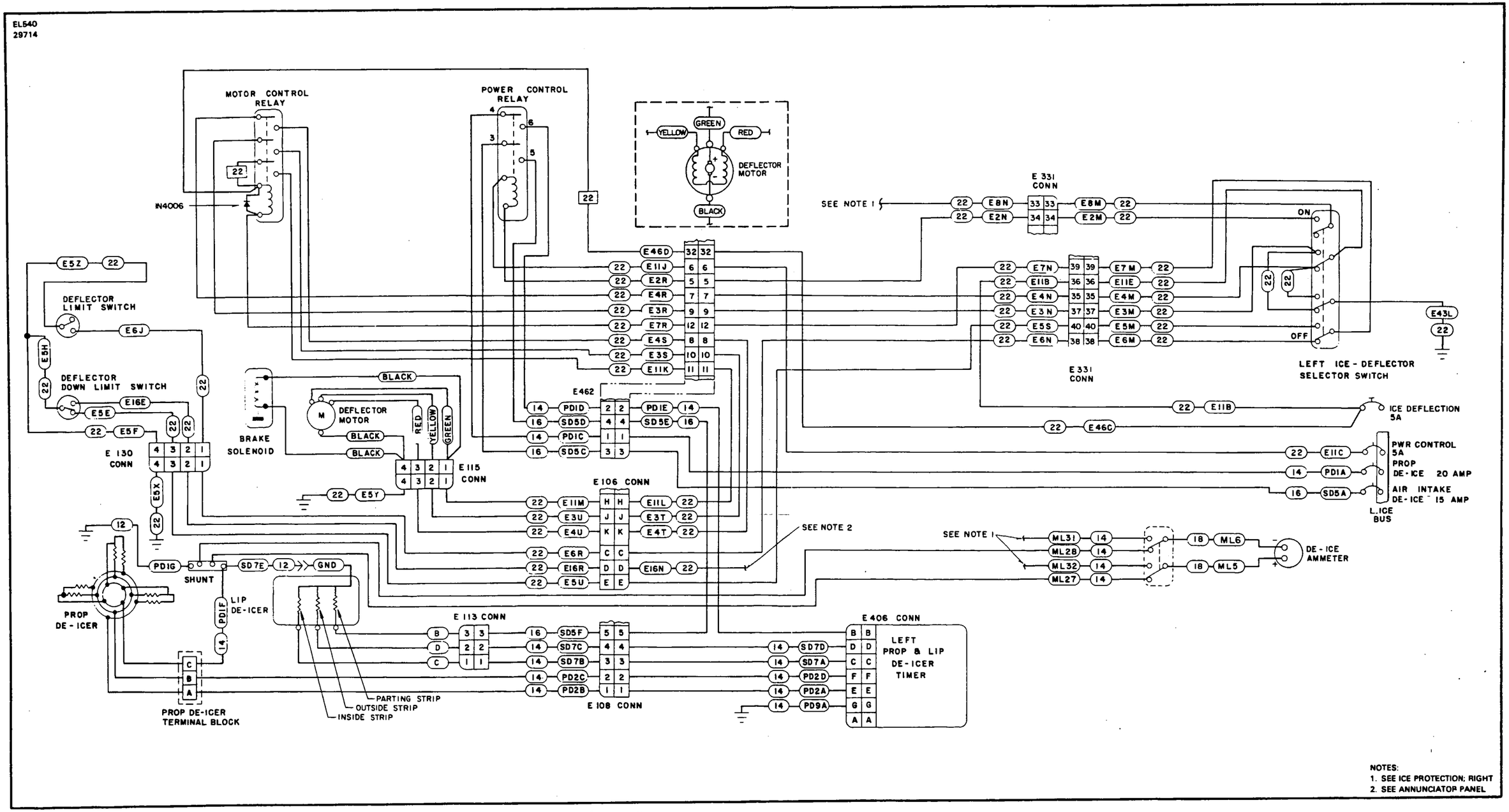

Figure 15-117. Ice Protection; Left, PA-31T S/N 31T-8120001 and up and PA-31T1 S/N 31T-8104001 and up

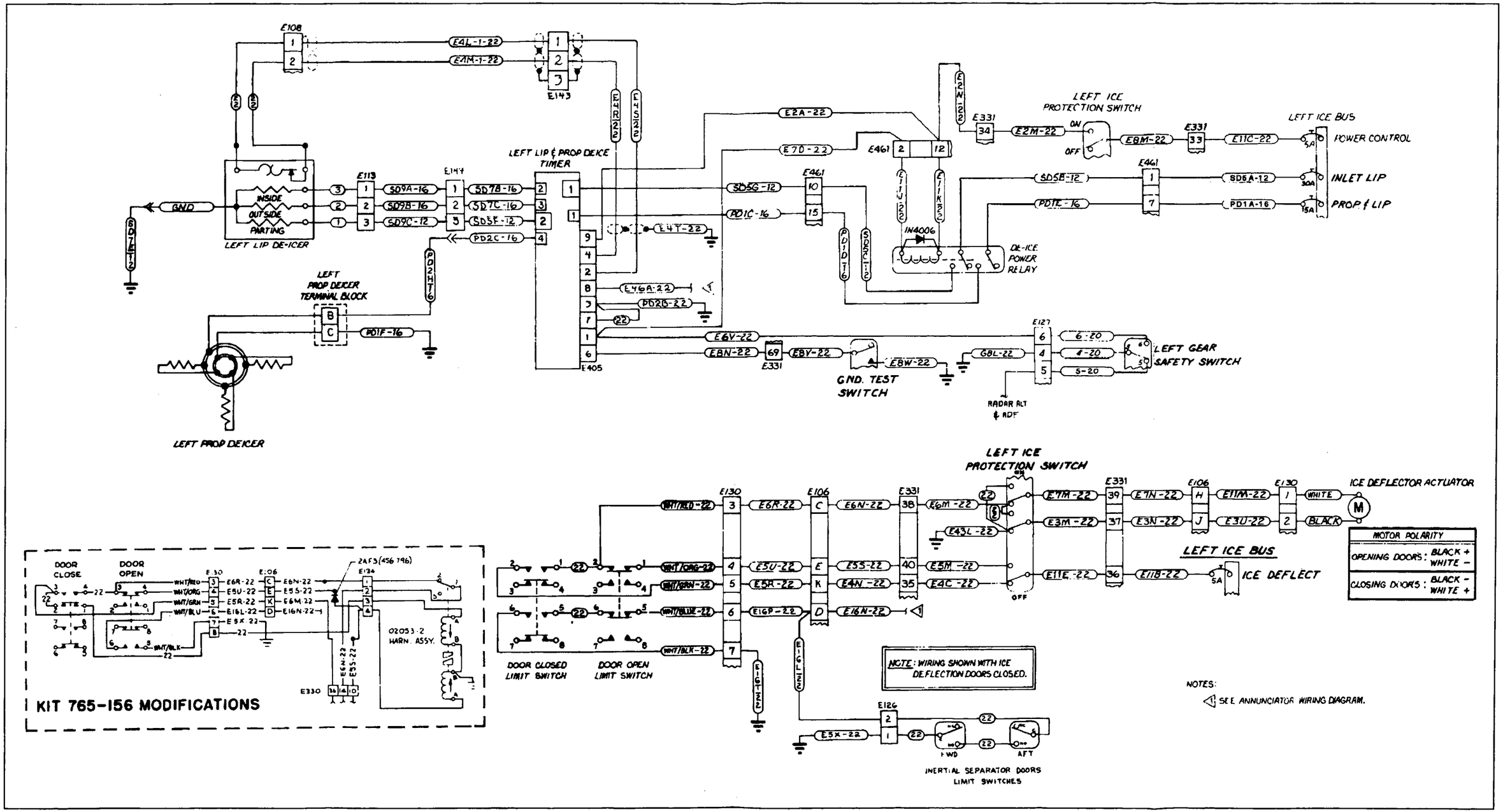

Figure 15-117a. Ice Protection - Left,
PA-31T1 S/N 31T-8304001 to -8304003 and S/N 31T-1104004 & up

THIS PAGE INTENTIONALLY LEFT BLANK

THIS PAGE INTENTIONALLY LEFT BLANK

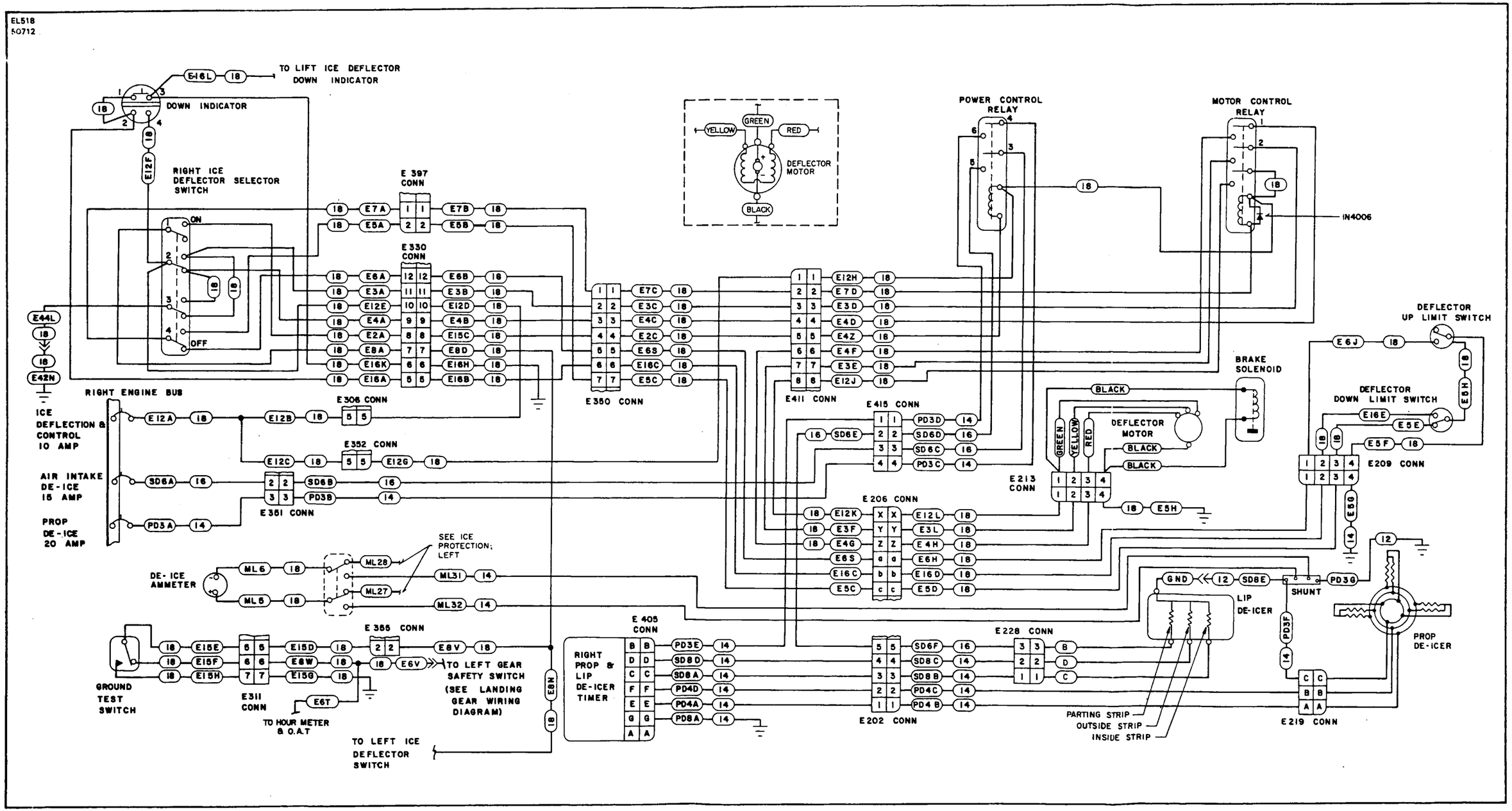

Figure 15-118. Ice Protection; Right, PA-31T S/N 31T-7400002 to -7720007

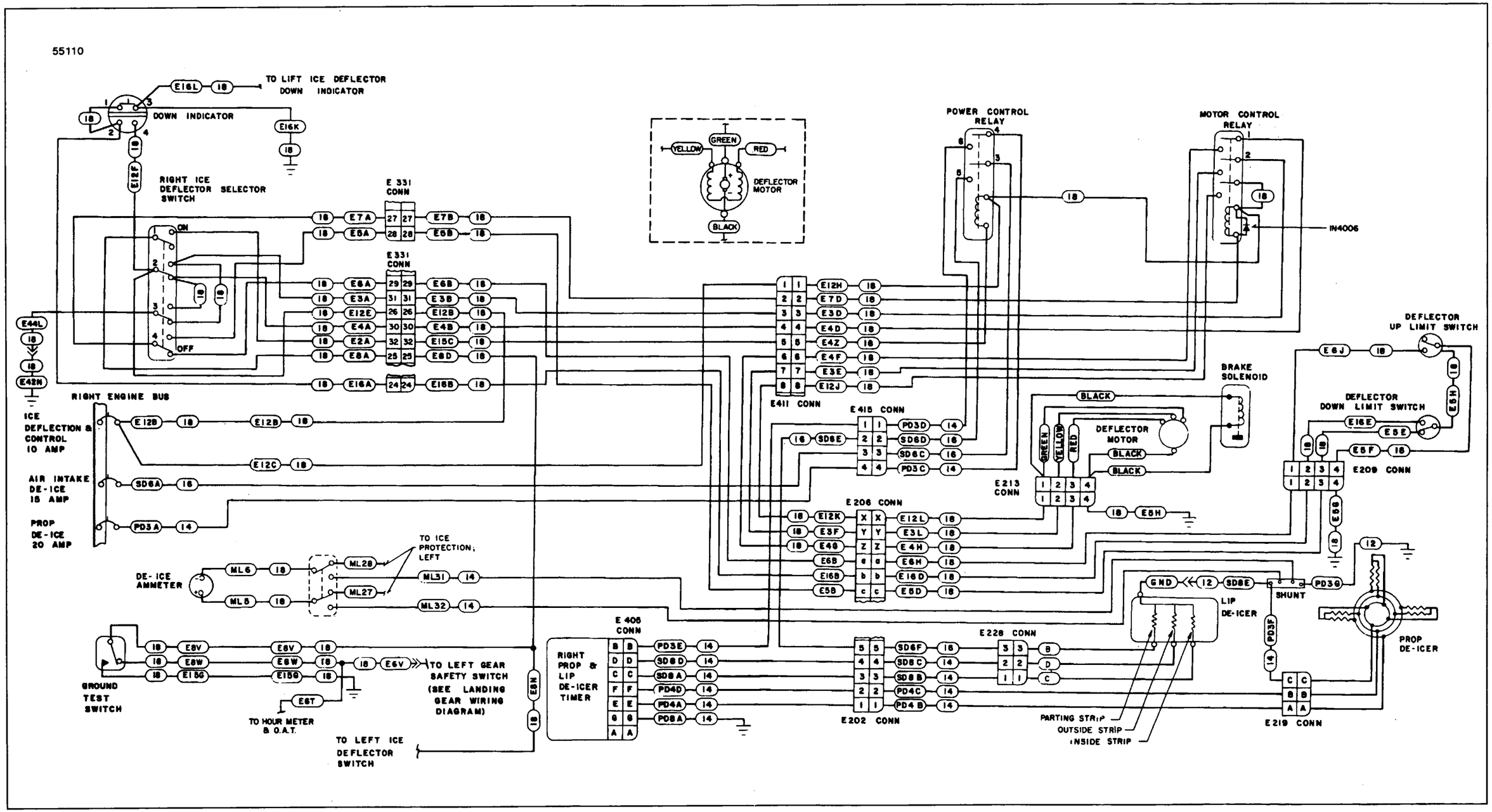

Figure 15-119. Ice Protection - Right,
PA-31T S/N 31T-7720008 to -7720069

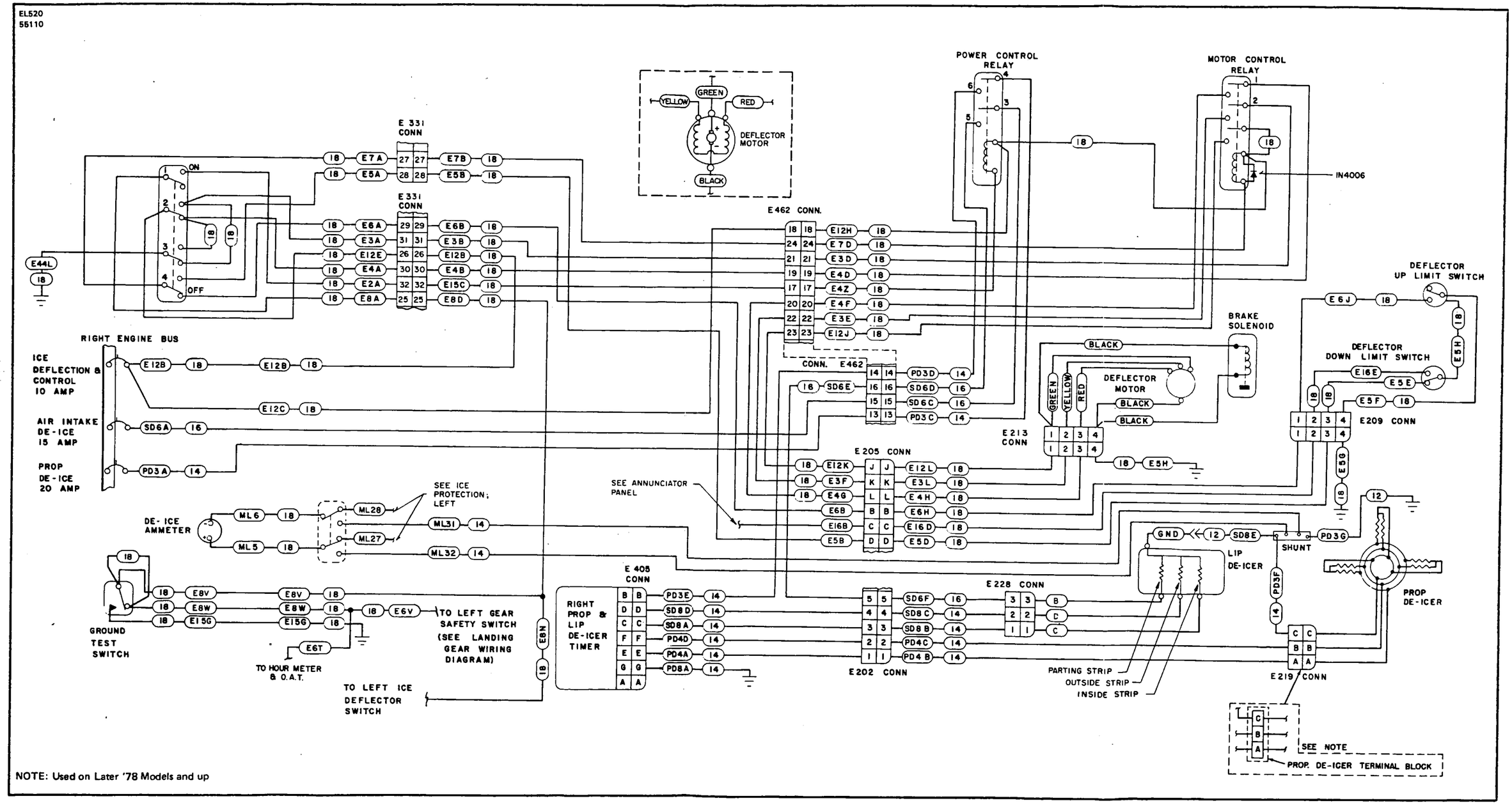

Figure 15-120. Ice Protection; Right,
PA-31T S/N 31T-7820001 to -8020092 and PA-31T1 S/N 31T-7804001 to -8004057

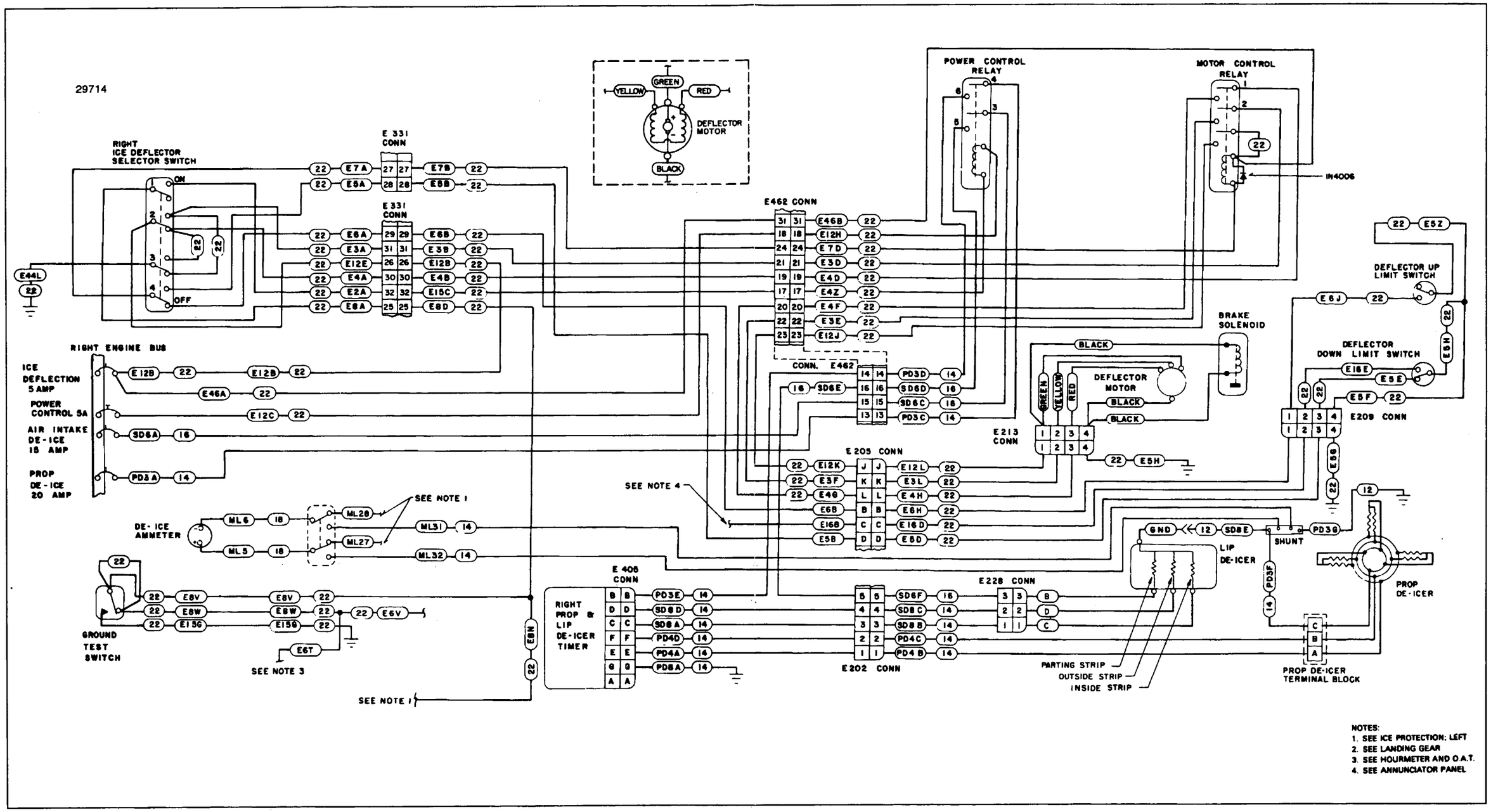

Figure 15-121. Ice Protection - Right,
PA-31T S/N 31T-8120001 & up and PA-31T1 S/N 31T-8104001 & up

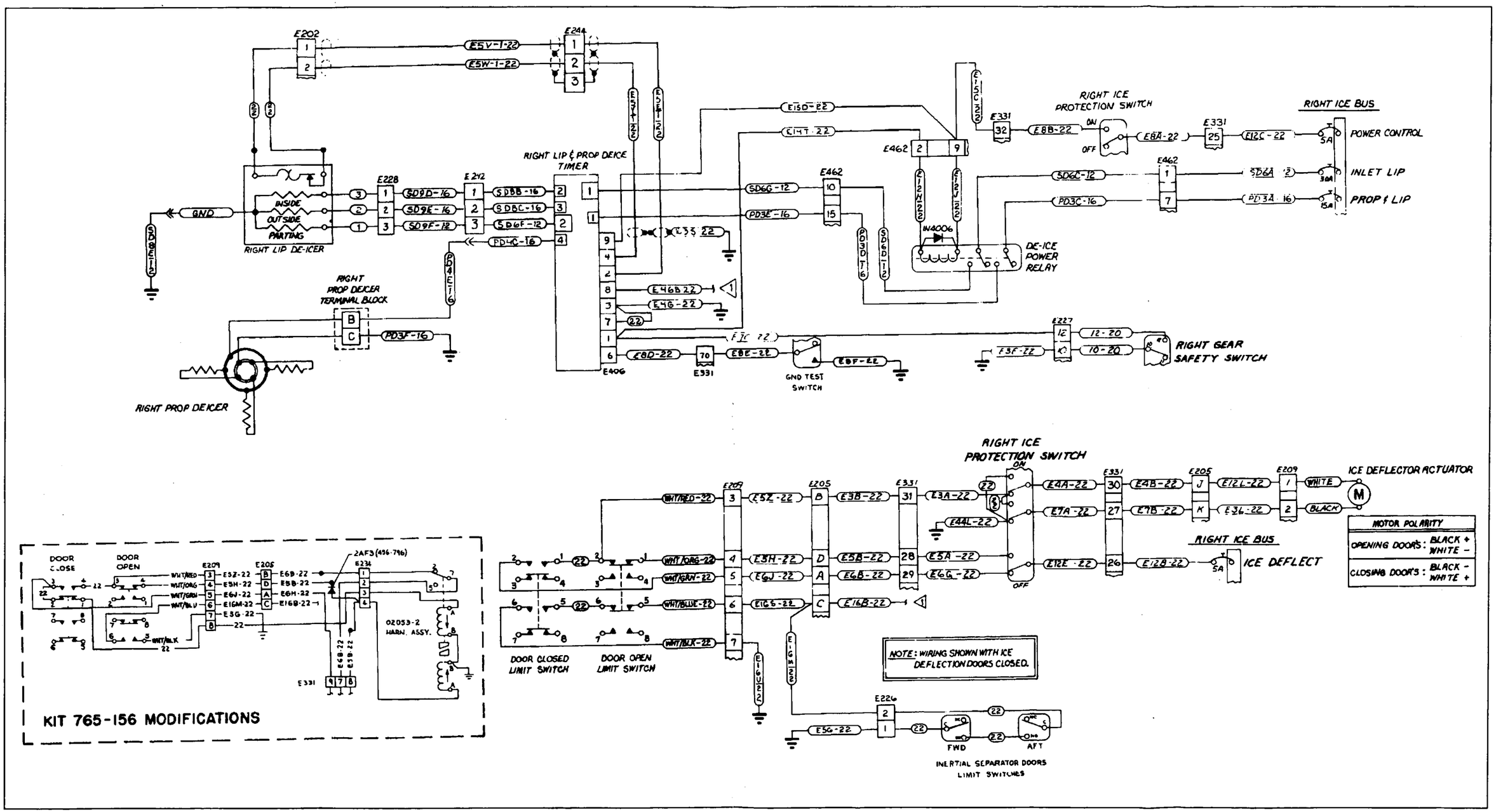

Figure 15-121a. Ice Protection - Right,
PA-31T1 S/N 31T-8304001 to -8304003 and S/N 31T-1104004 & up

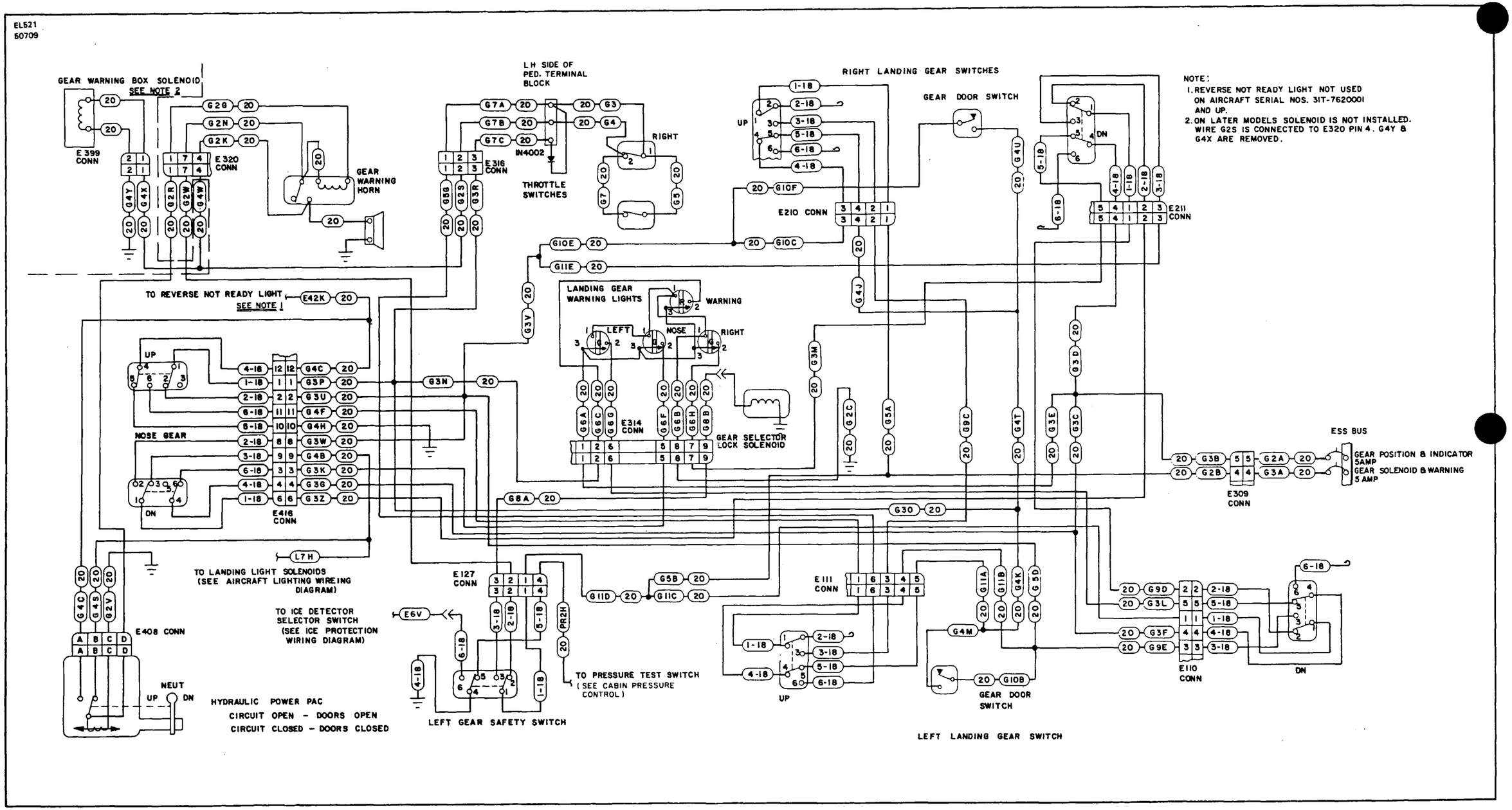

Figure 15-122. Landing Gear,
PA-31T S/N 31T-7400002 to -7720007

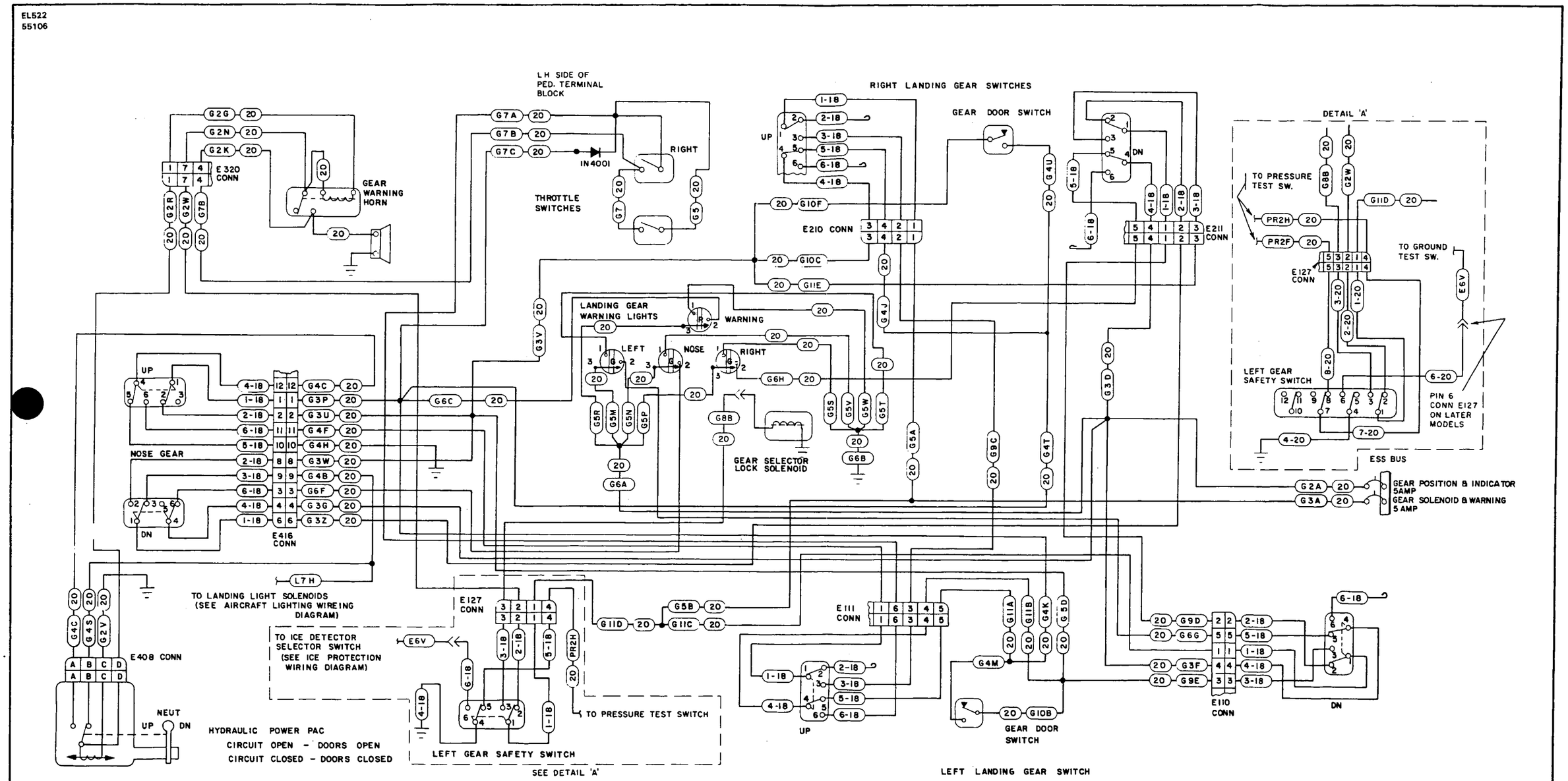

Figure 15-123. Landing Gear,
PA-31T S/N 31T-7720008 to -8020092 and PA-31T1 S/N 31T-7804001 to -8004057

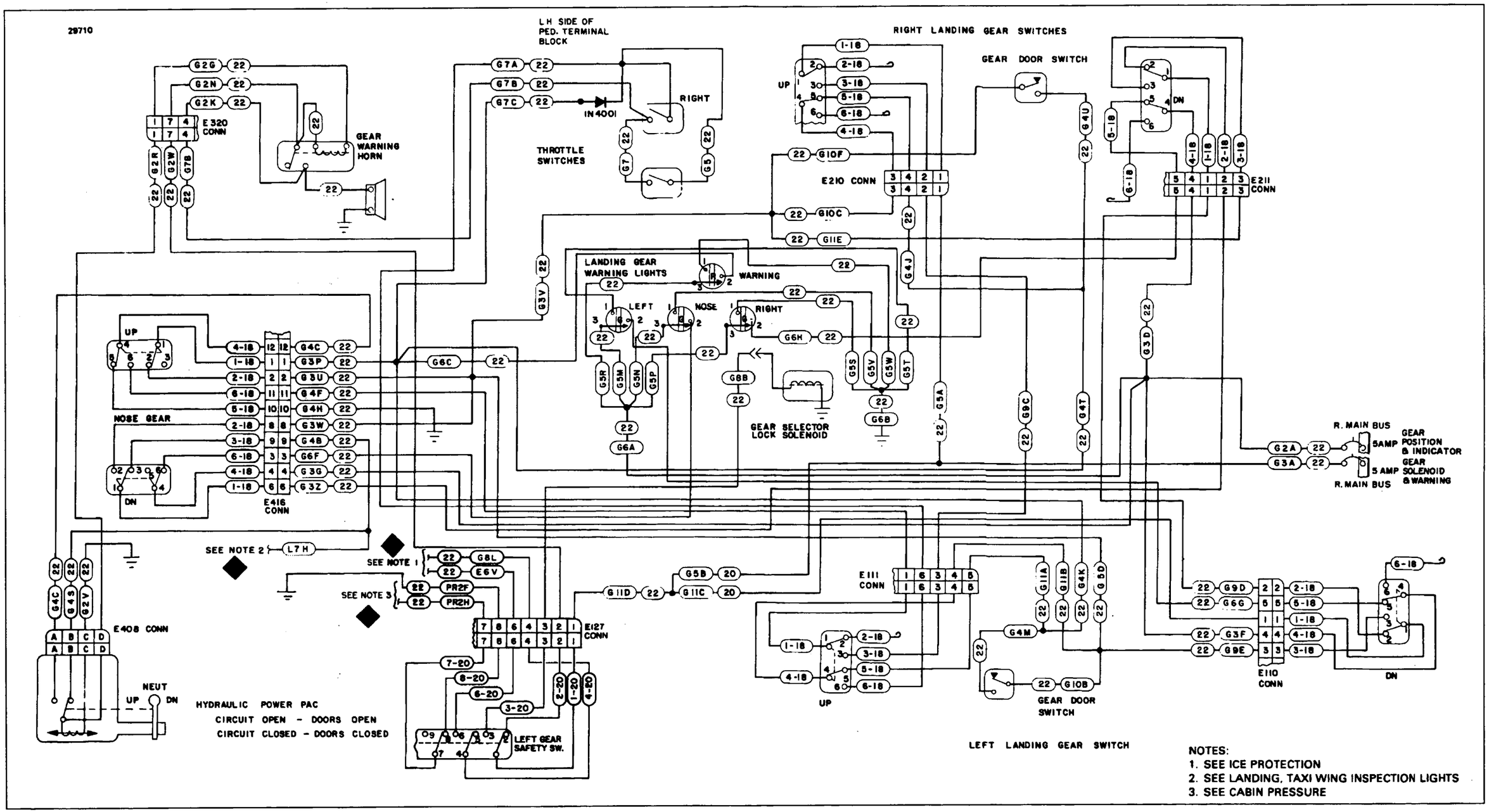

Figure 15-124. Landing Gear,
PA-31T S/N 31T-8120001 & up and PA-31T1 S/N 31T-8104001 to -8304003; -1104004 & up

EL523
50713

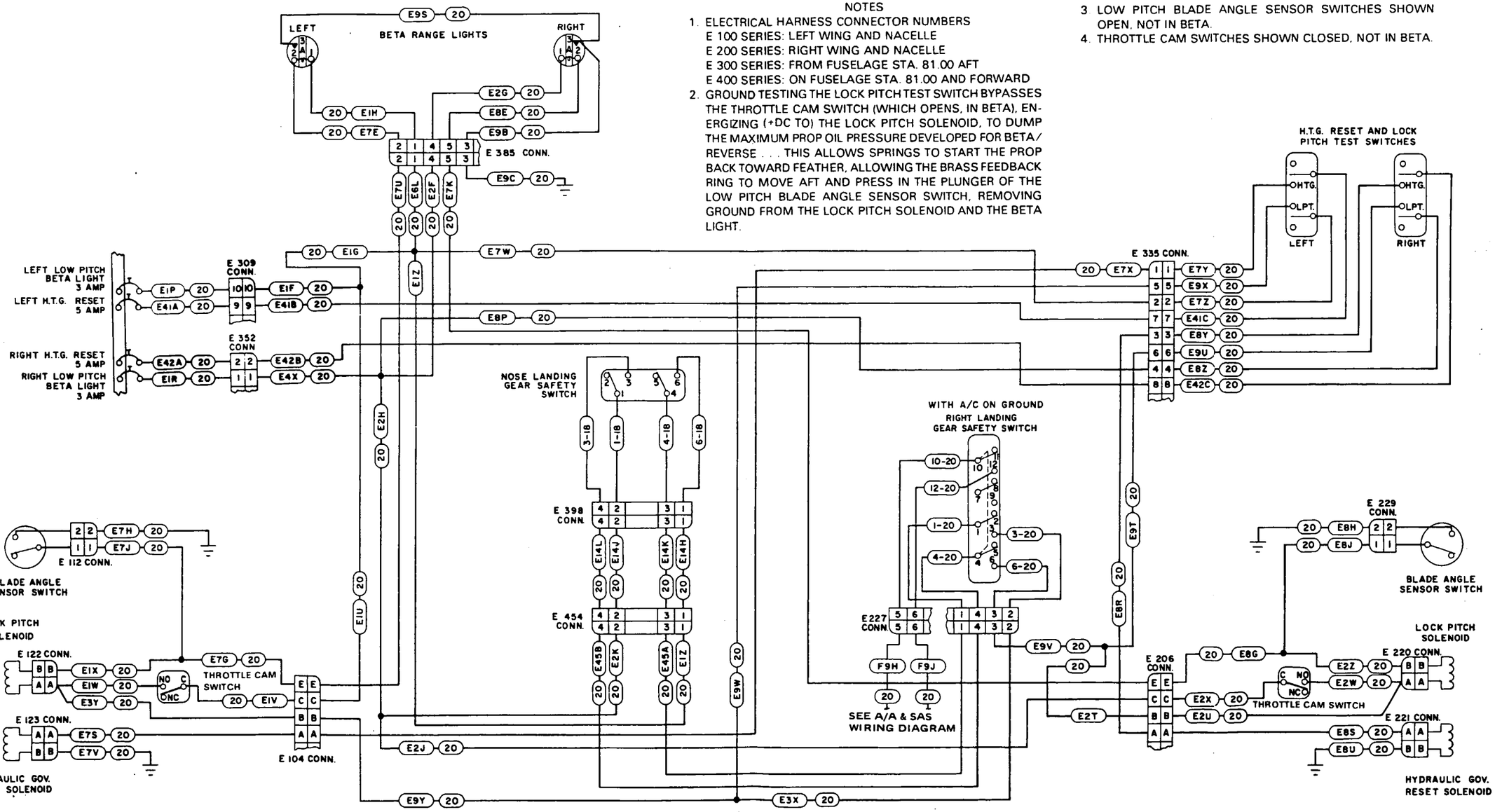

NOTES

1. ELECTRICAL HARNESS CONNECTOR NUMBERS
   E 100 SERIES: LEFT WING AND NACELLE
   E 200 SERIES: RIGHT WING AND NACELLE
   E 300 SERIES: FROM FUSELAGE STA. 81.00 AFT
   E 400 SERIES: ON FUSELAGE STA. 81.00 AND FORWARD
2. GROUND TESTING THE LOCK PITCH TEST SWITCH BYPASSES THE THROTTLE CAM SWITCH (WHICH OPENS, IN BETA), ENERGIZING (+DC TO) THE LOCK PITCH SOLENOID, TO DUMP THE MAXIMUM PROP OIL PRESSURE DEVELOPED FOR BETA/REVERSE . . . THIS ALLOWS SPRINGS TO START THE PROP BACK TOWARD FEATHER, ALLOWING THE BRASS FEEDBACK RING TO MOVE AFT AND PRESS IN THE PLUNGER OF THE LOW PITCH BLADE ANGLE SENSOR SWITCH, REMOVING GROUND FROM THE LOCK PITCH SOLENOID AND THE BETA LIGHT.
3. LOW PITCH BLADE ANGLE SENSOR SWITCHES SHOWN OPEN, NOT IN BETA.
4. THROTTLE CAM SWITCHES SHOWN CLOSED, NOT IN BETA.

Figure 15-125. H.T.G. and Low Pitch Beta Lights; Right and Left, PA-31T S/N 31T-7400002 to -7720007

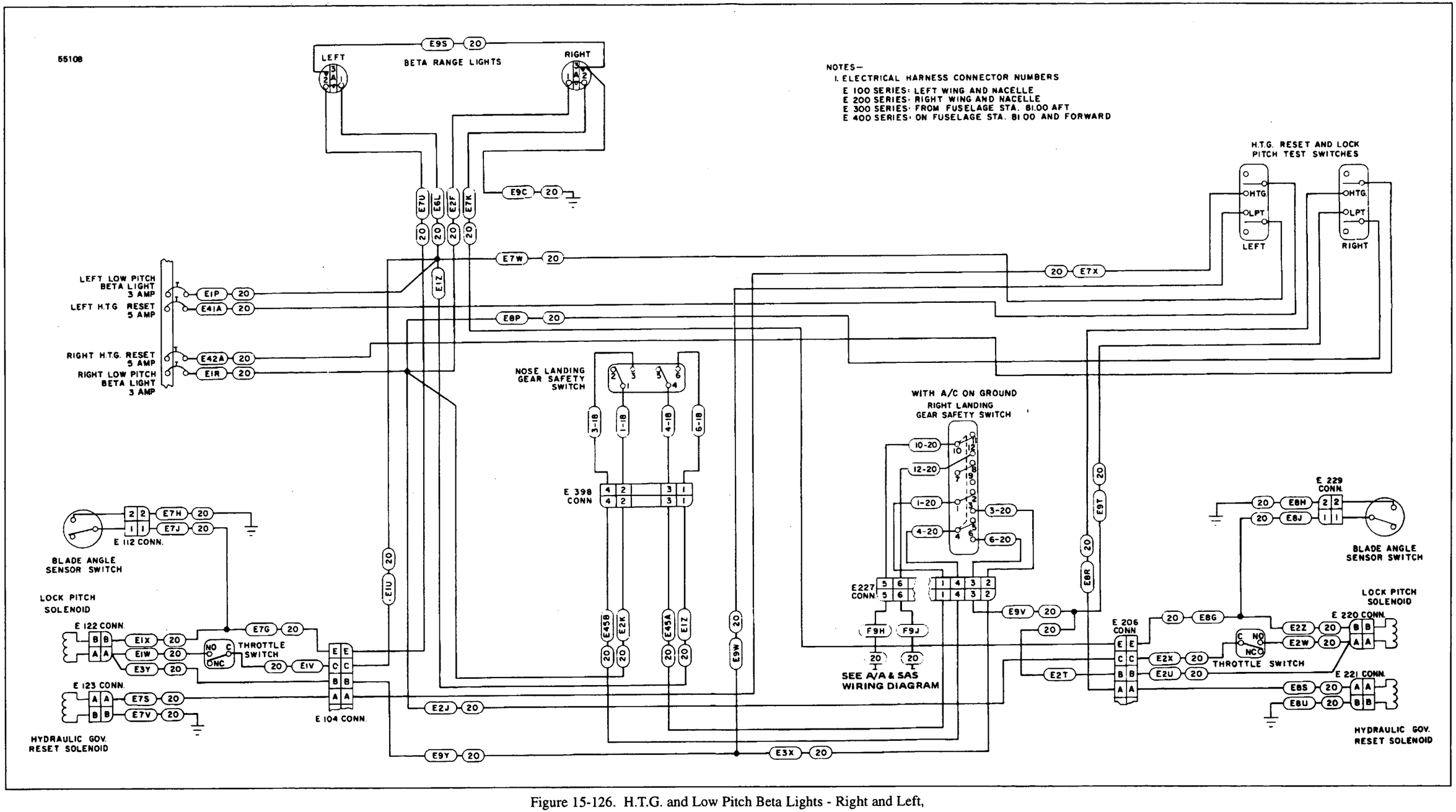

Figure 15-126. H.T.G. and Low Pitch Beta Lights - Right and Left,
PA-31T S/N 31T-7720008 to -7720069

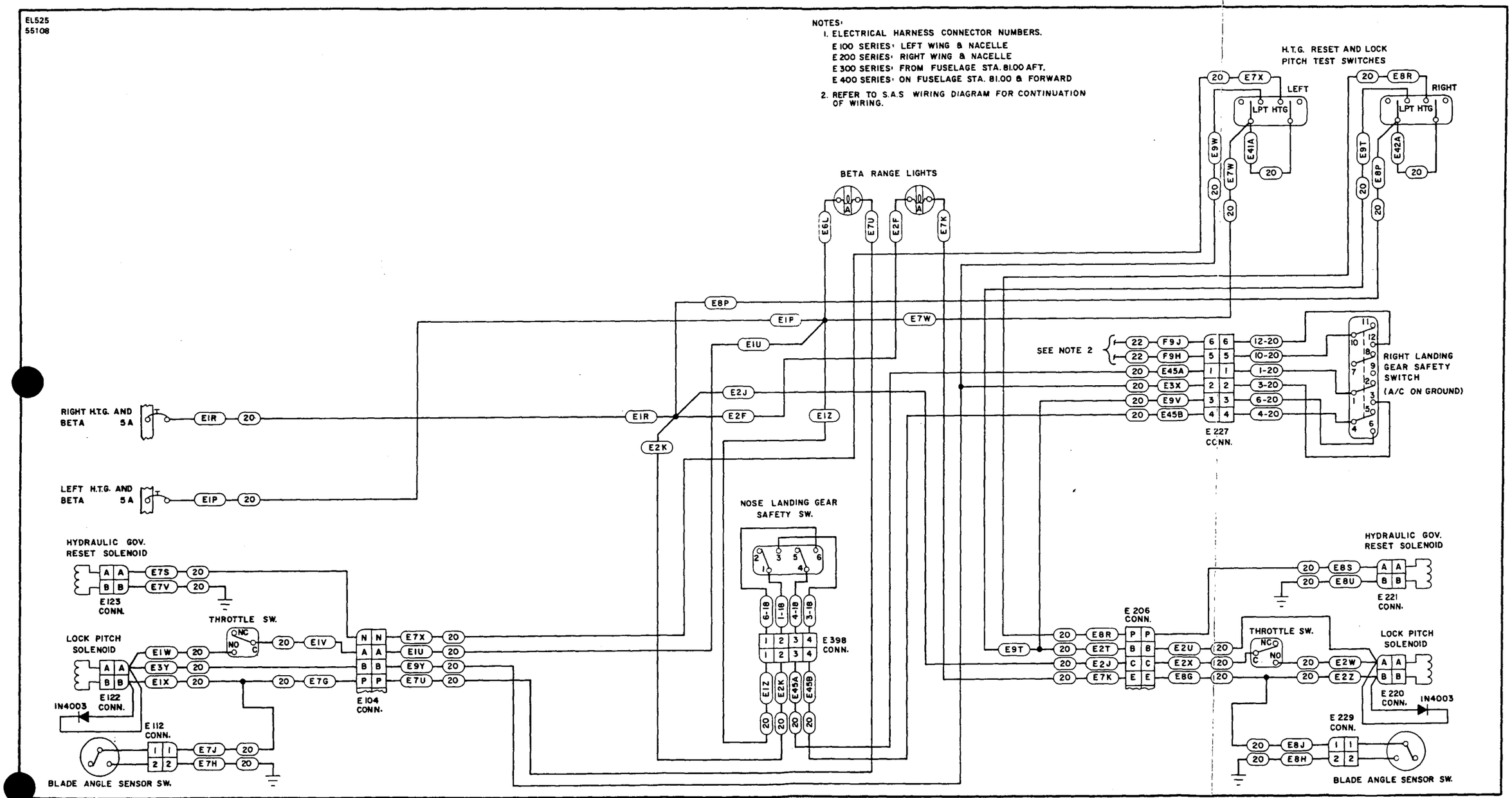

Figure 15-127. H.T.G. and Low Pitch Beta Lights; Right and Left,
PA-31T S/N 31T-7820001 to -8020092 and PA-31T1 S/N 31T-7804001 to -8004057

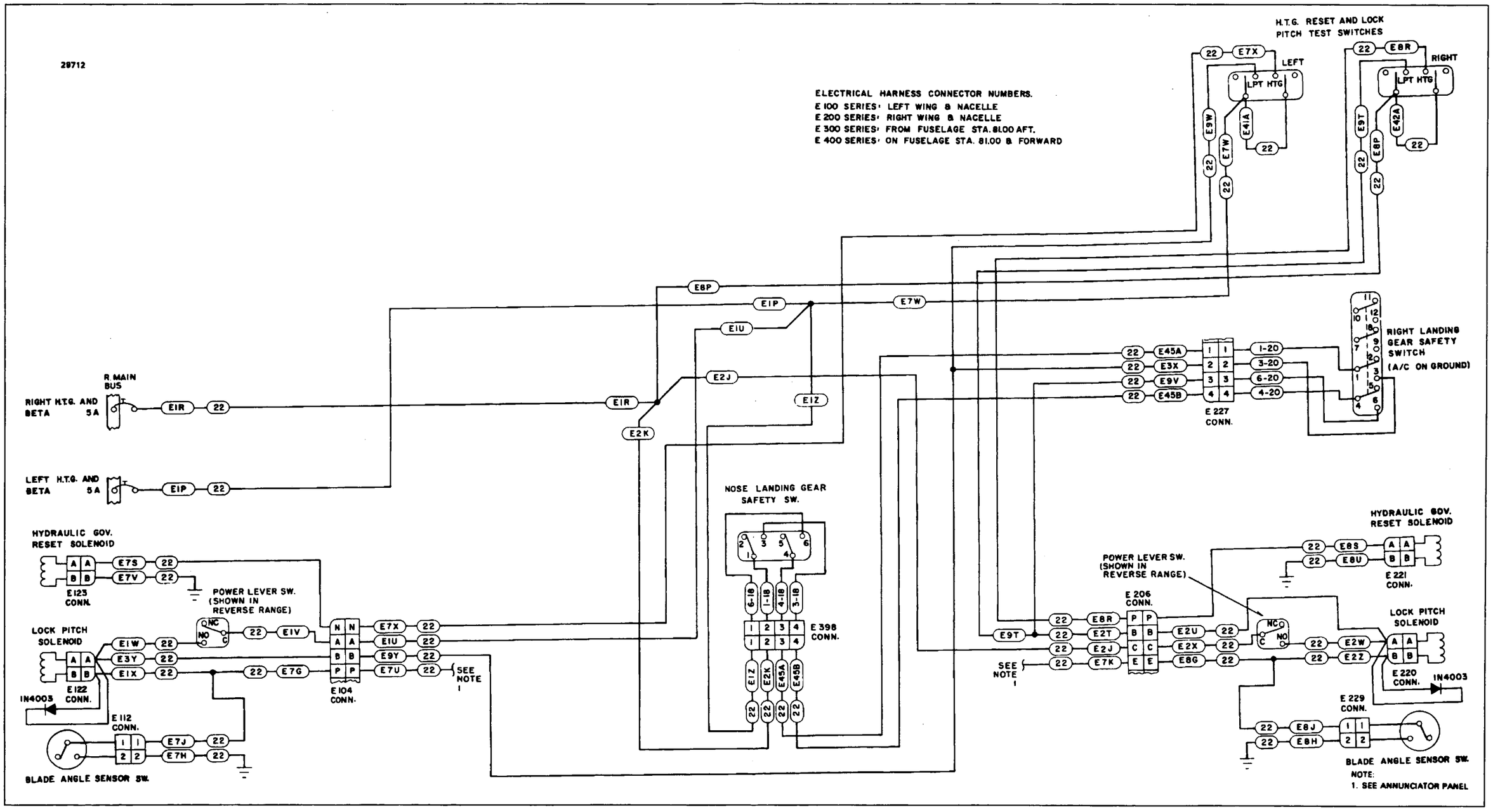

Figure 15-9128. H.T.G. and Low Pitch Beta Lights - Right and Left, PA-31T S/N 31T-8120001 & up and PA-31T1 S/N 31T-8104001 & up

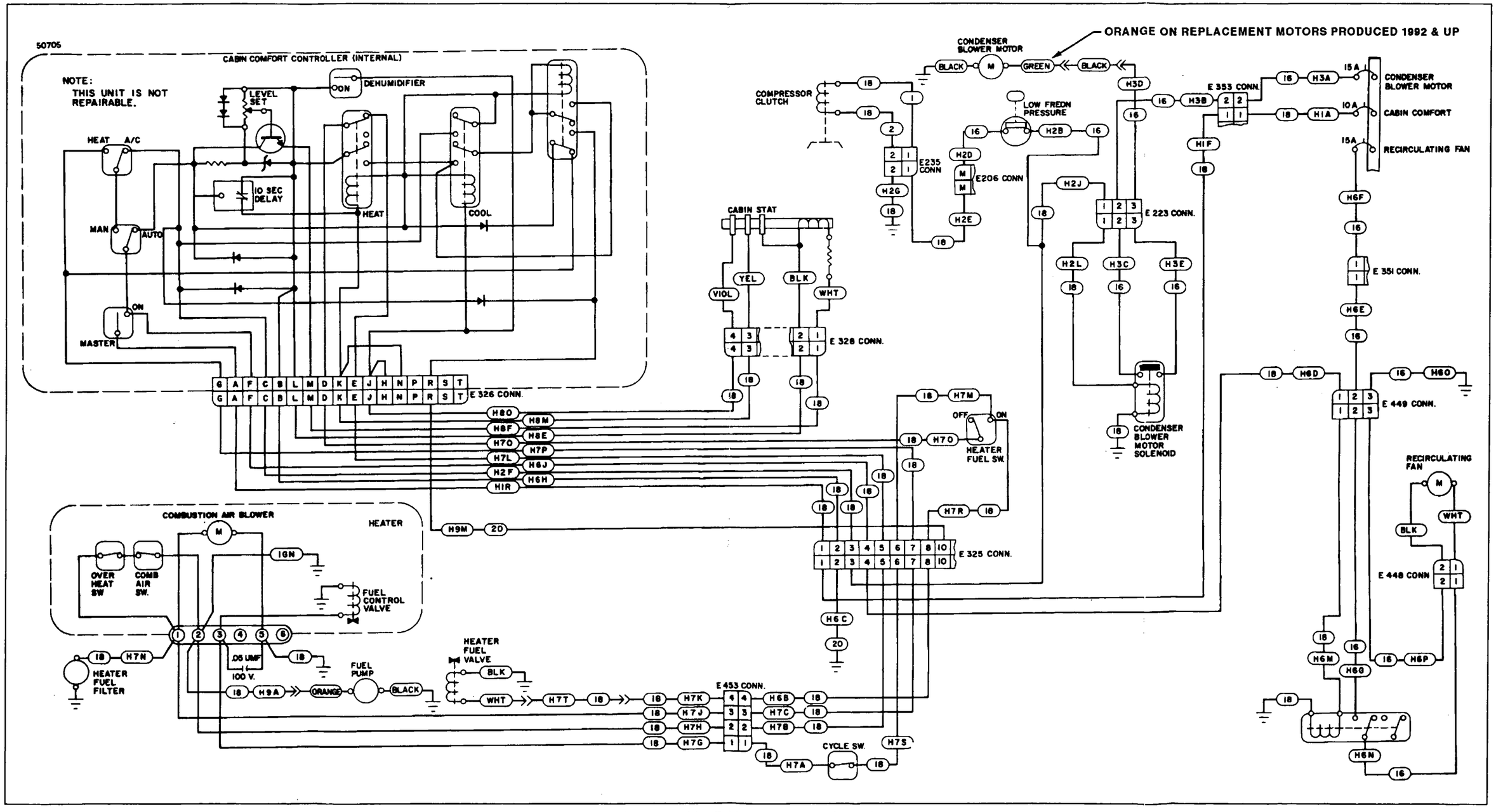

Figure 15-129. Cabin Temperature Control,
PA-31T S/N 31T-7400002 to -7720007

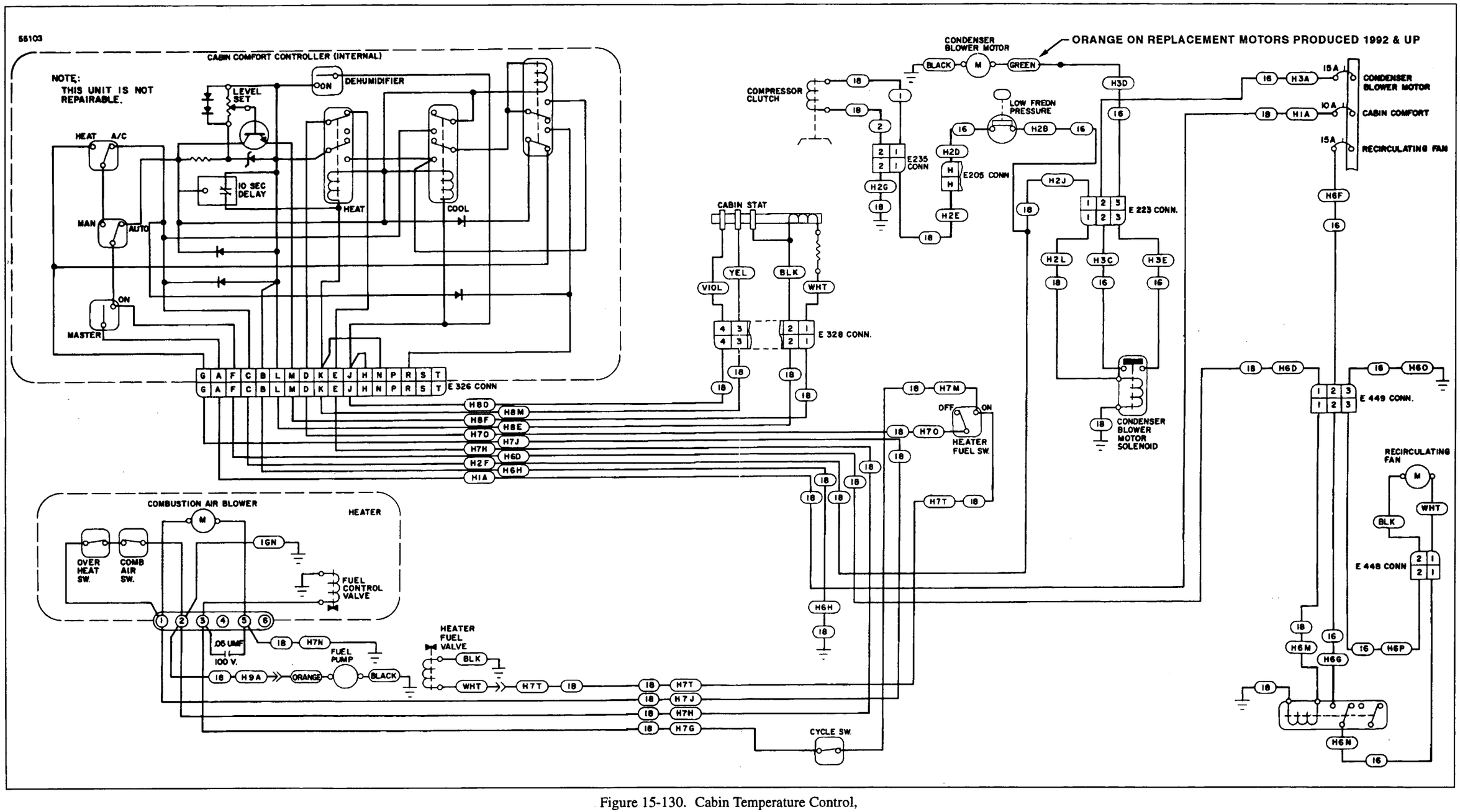

Figure 15-130. Cabin Temperature Control,
PA-31T S/N 31T-7720008 to -7720069

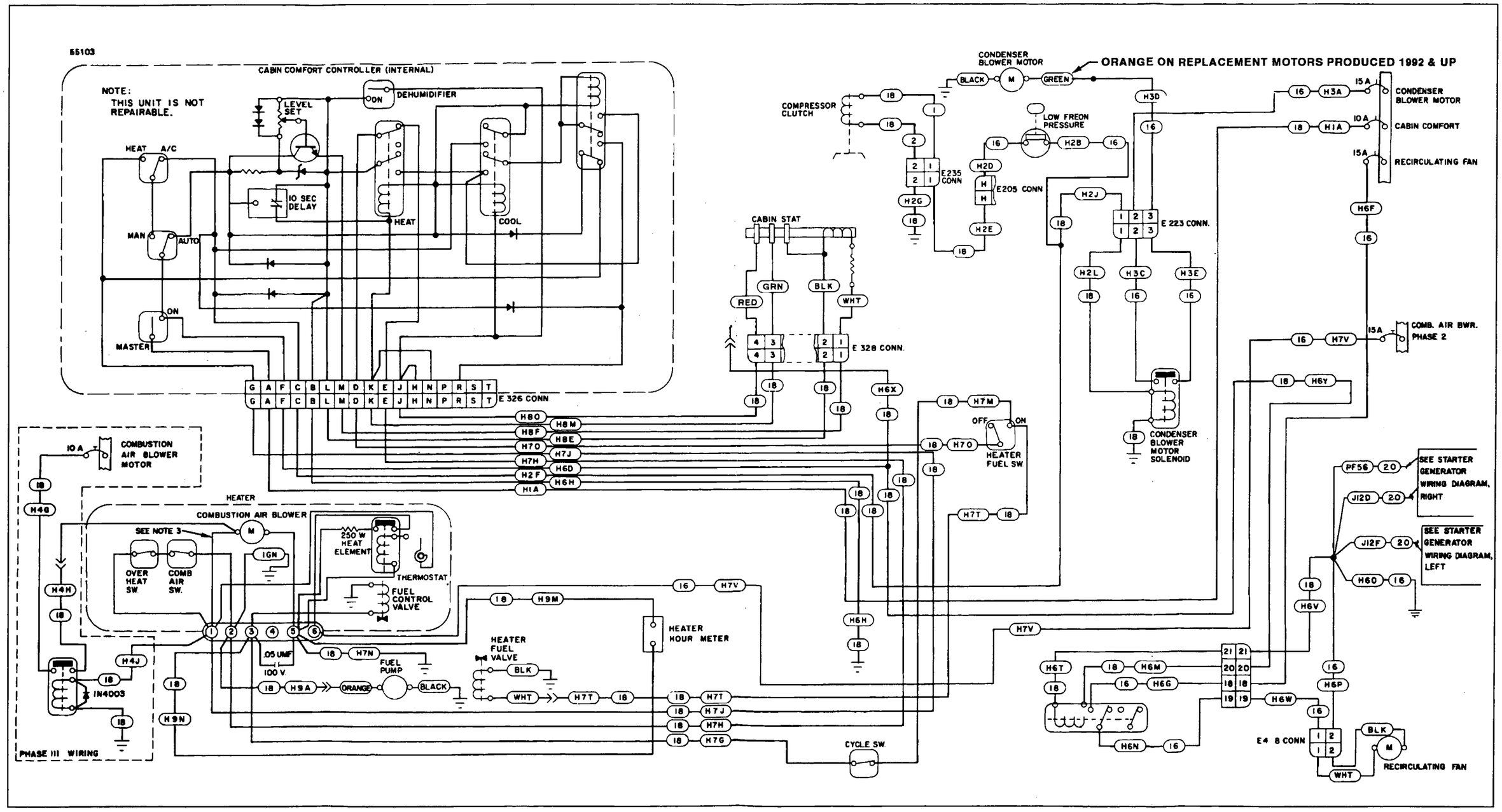

Figure 15-131. Cabin Temperature Control,
PA-31T S/N 31T-7820001 to -7920005 and PA-31T1 S/N 31T-7804001 to -7804011

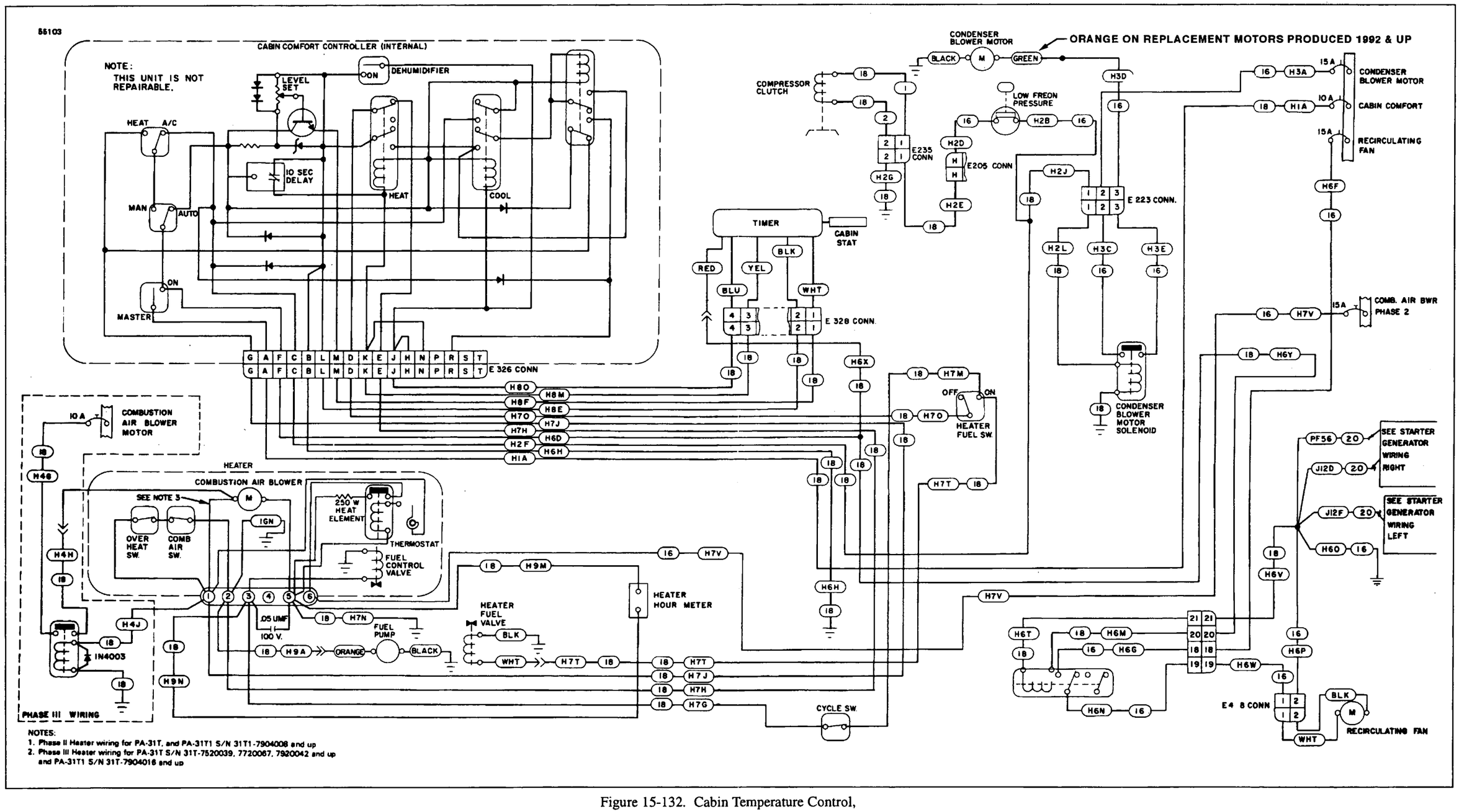

Figure 15-132. Cabin Temperature Control,
PA-31T S/N 31T-7920006 to -7920094 and PA-31T1 S/N 31T-7904001 to -7904057

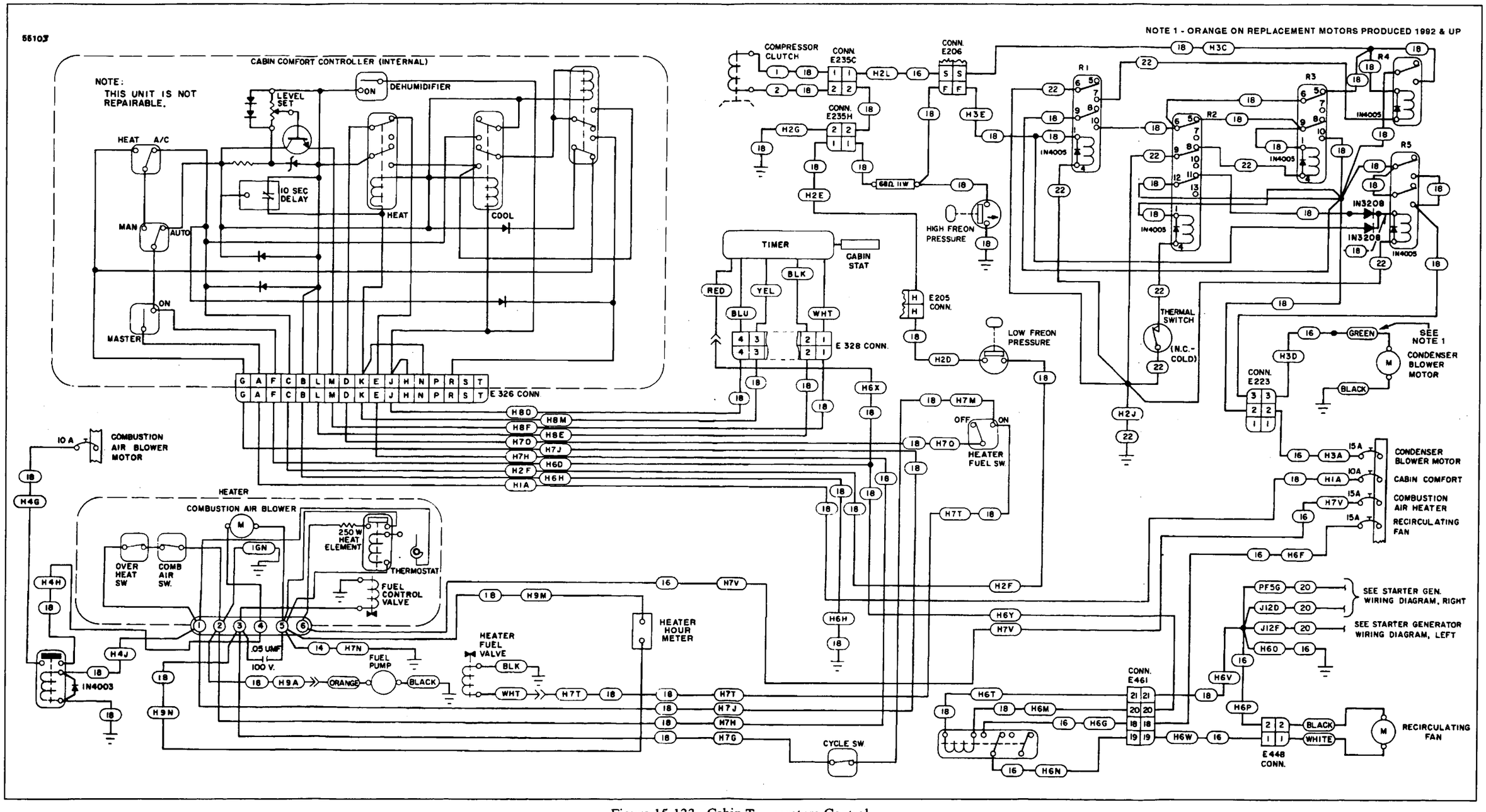

Figure 15-133. Cabin Temperature Control,
PA-31T S/N 31T-8020001 to -8020092 and PA-31T1 S/N 31T-8004001 to -8004057

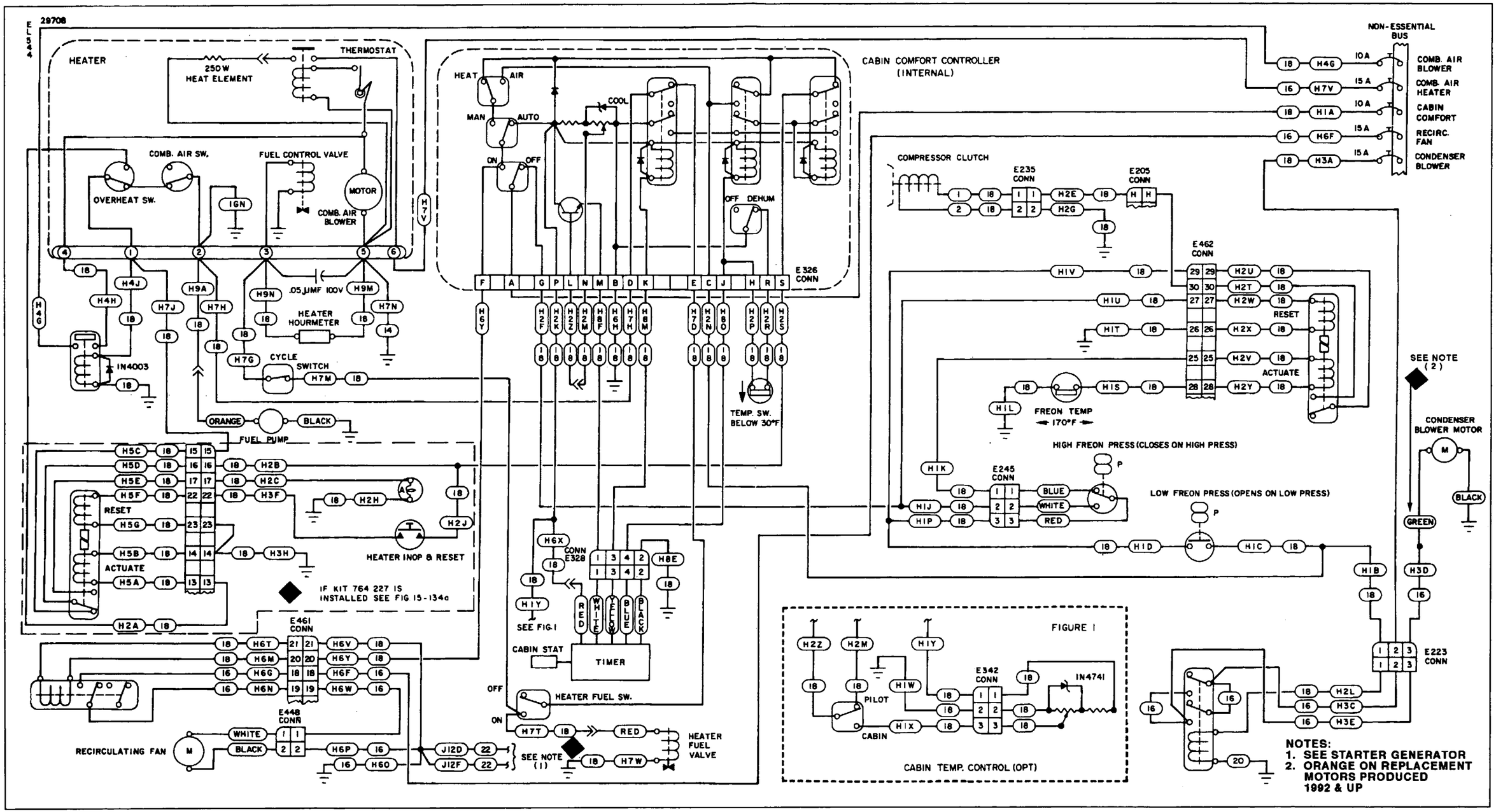

Figure 15-134. Cabin Comfort,
PA-31T S/N 31T-8120001 to -8120060 and PA-31T1 S/N 31T-8104001 to -8104062

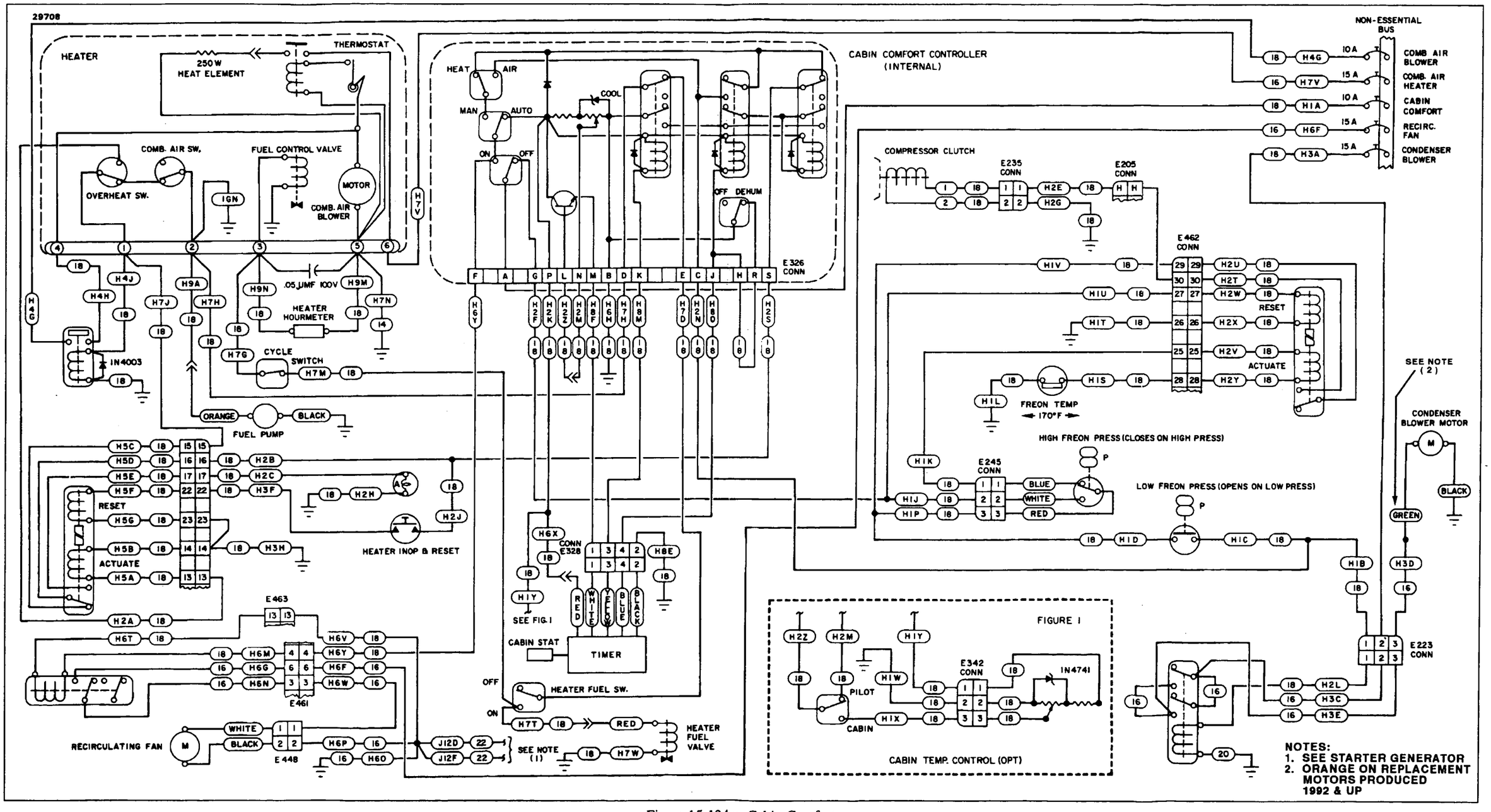

Figure 15-134a. Cabin Comfort,
PA-31T S/N 31T-8120061 & up and PA-31T1 S/N 31T-8104063 & up

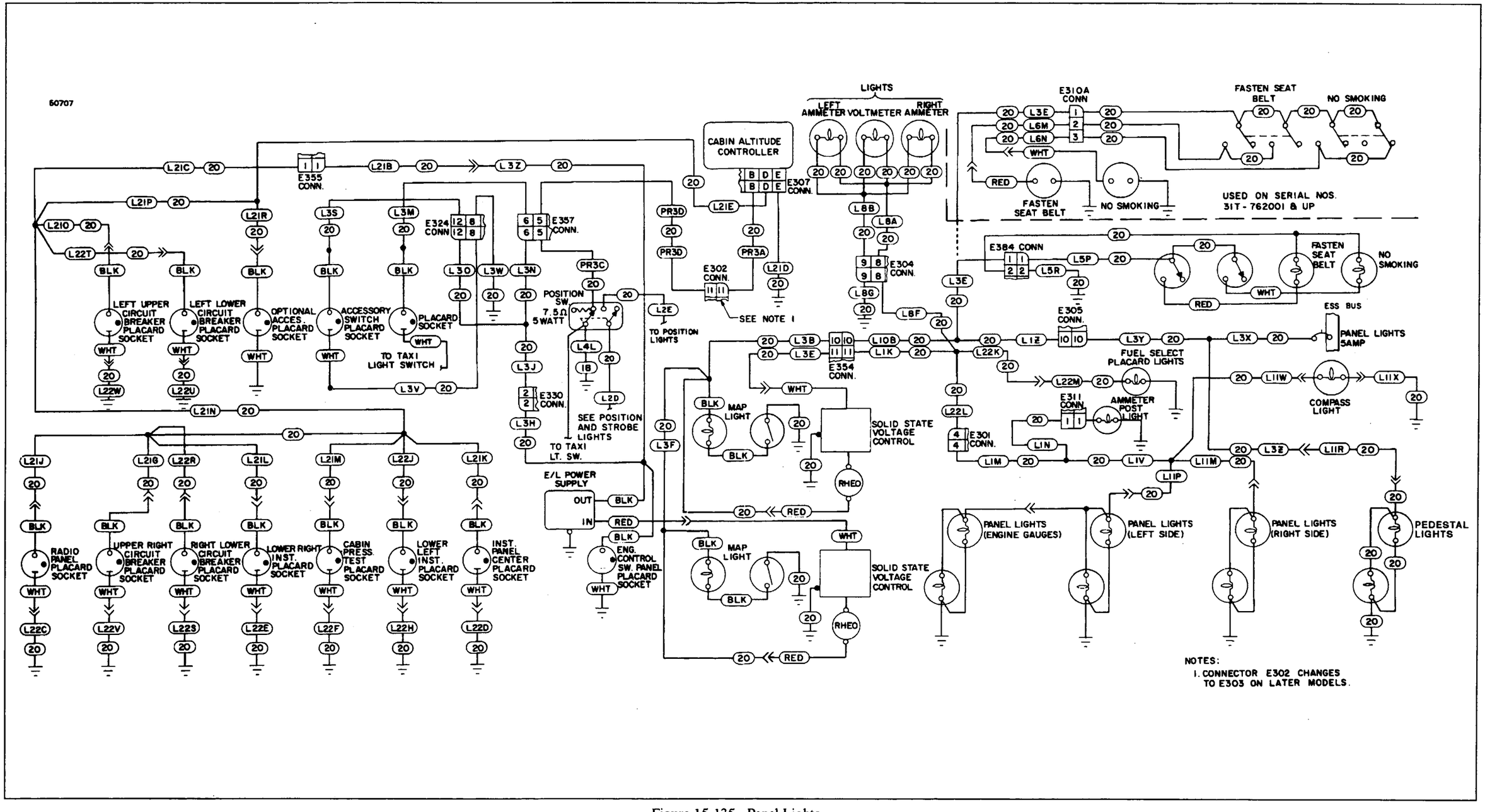

Figure 15-135. Panel Lights,
PA-31T S/N 31T-7400002 to -7720007

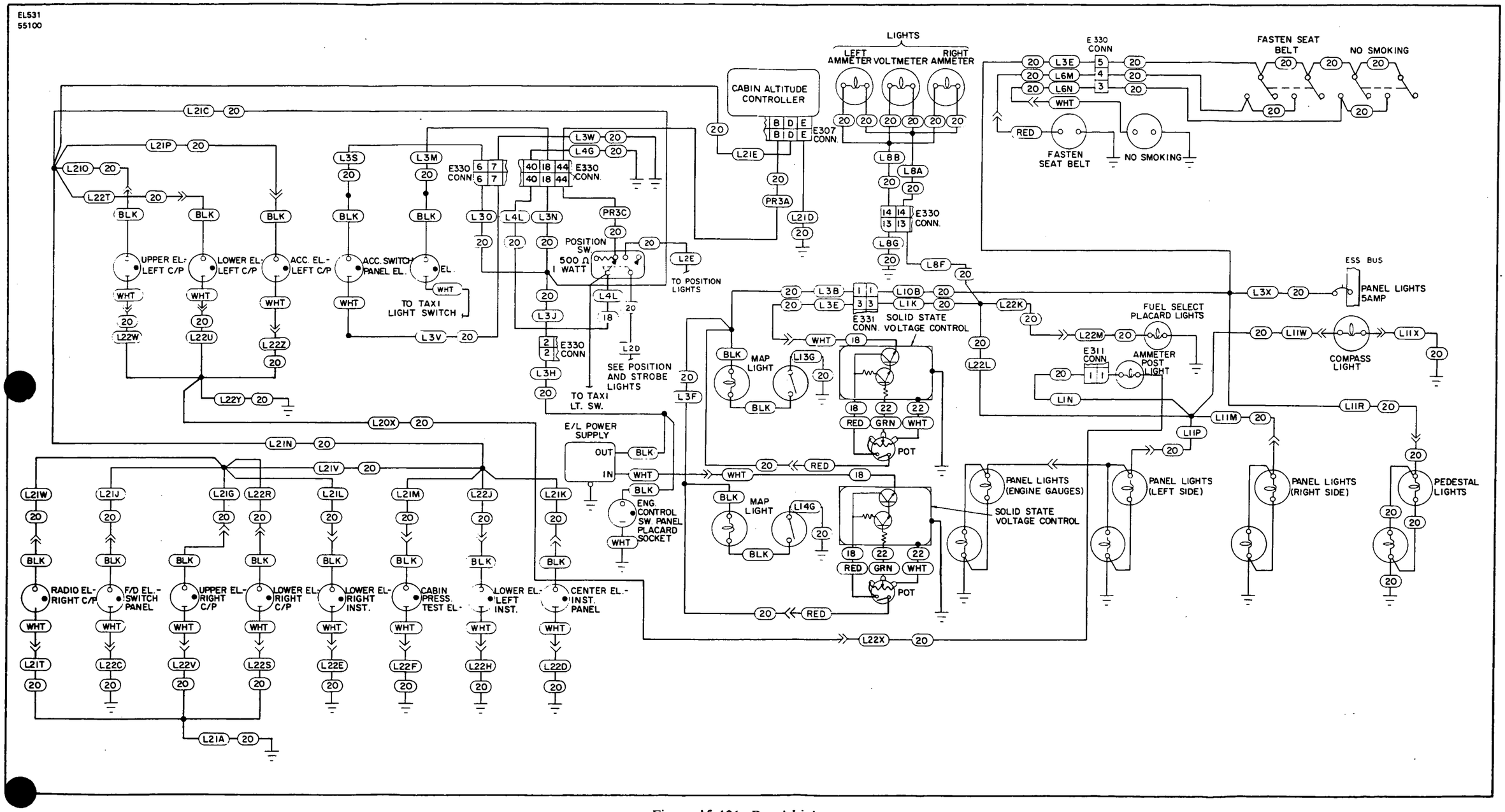

Figure 15-136. Panel Lights.
PA-31T S/N 31T-7720008 to 7720069

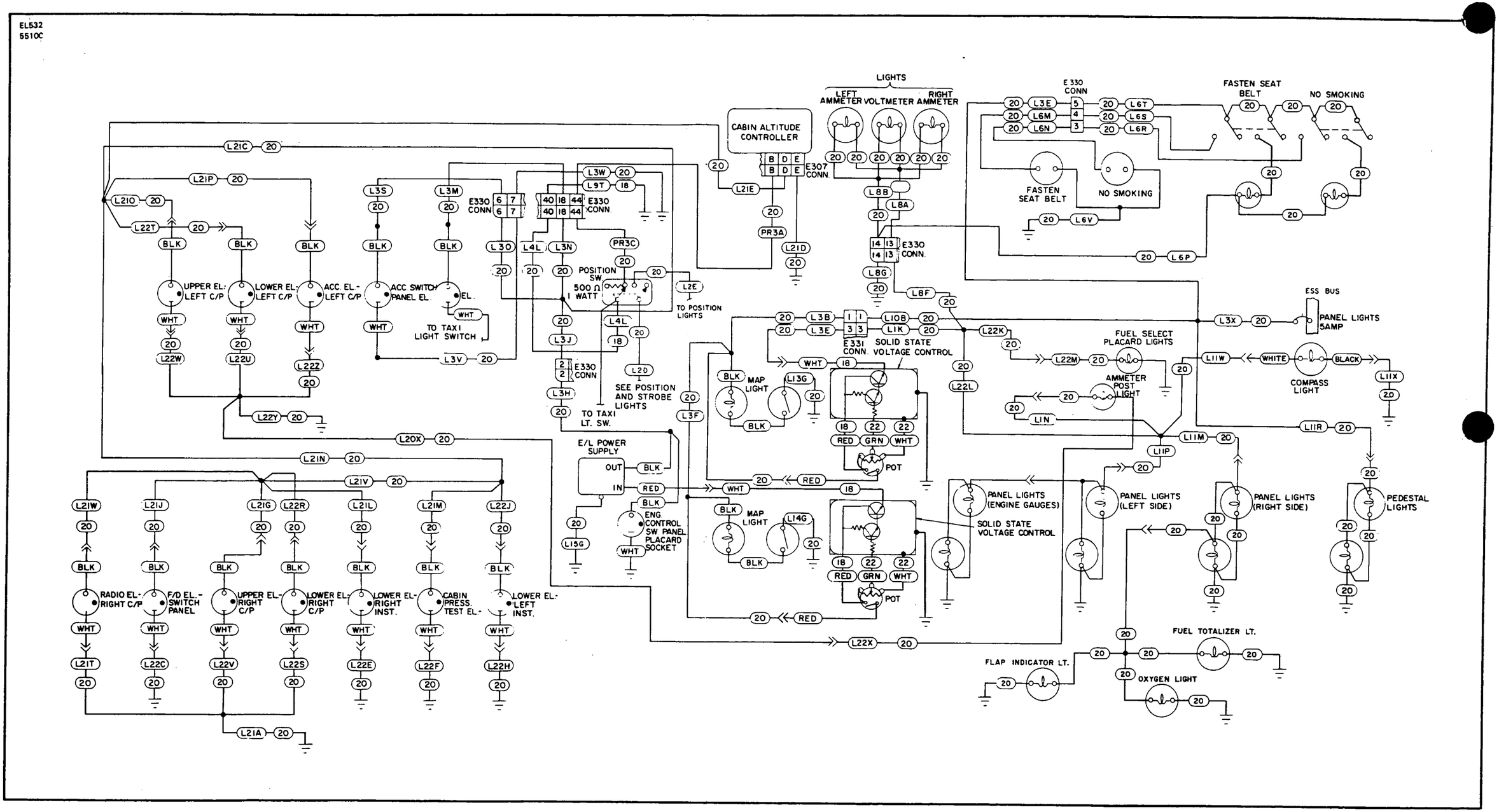

Figure 15-137. Panel Lights,
PA-31T S/N 31T-7820001 to 7820092 and PA-31T1 S/N 31T-7804001 to 7804011

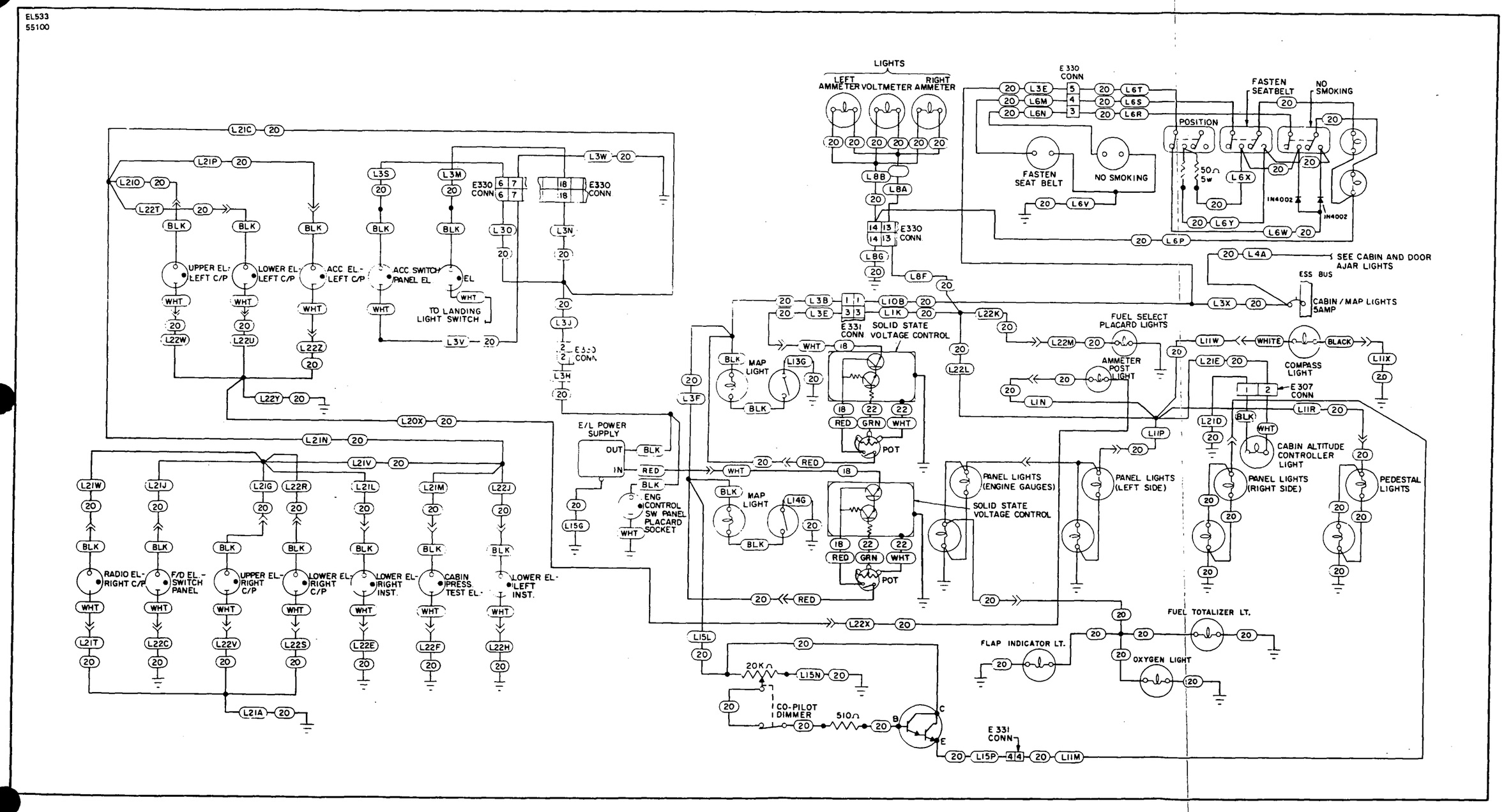

Figure 15-138. Panel Lights,
PA-31T S/N 31T-7920001 to 7920094 and PA-31T1 S/N 31T-7904001 to 7904057

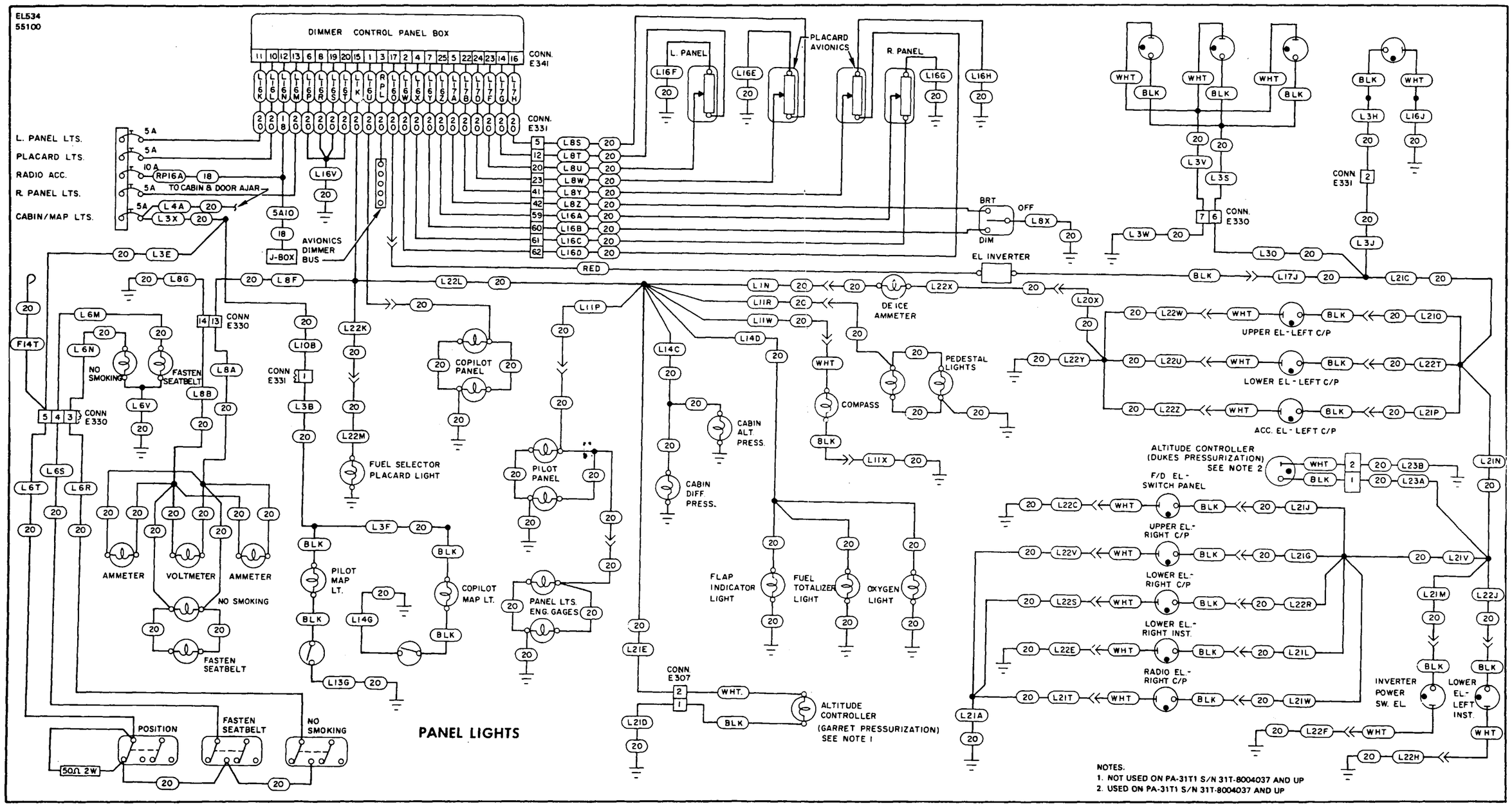

Figure 15-139. Panel Lights,
PA-31T S/N 31T-8020001 to -8020092 and PA-31T1 S/N 31T-8004001 to -8004057

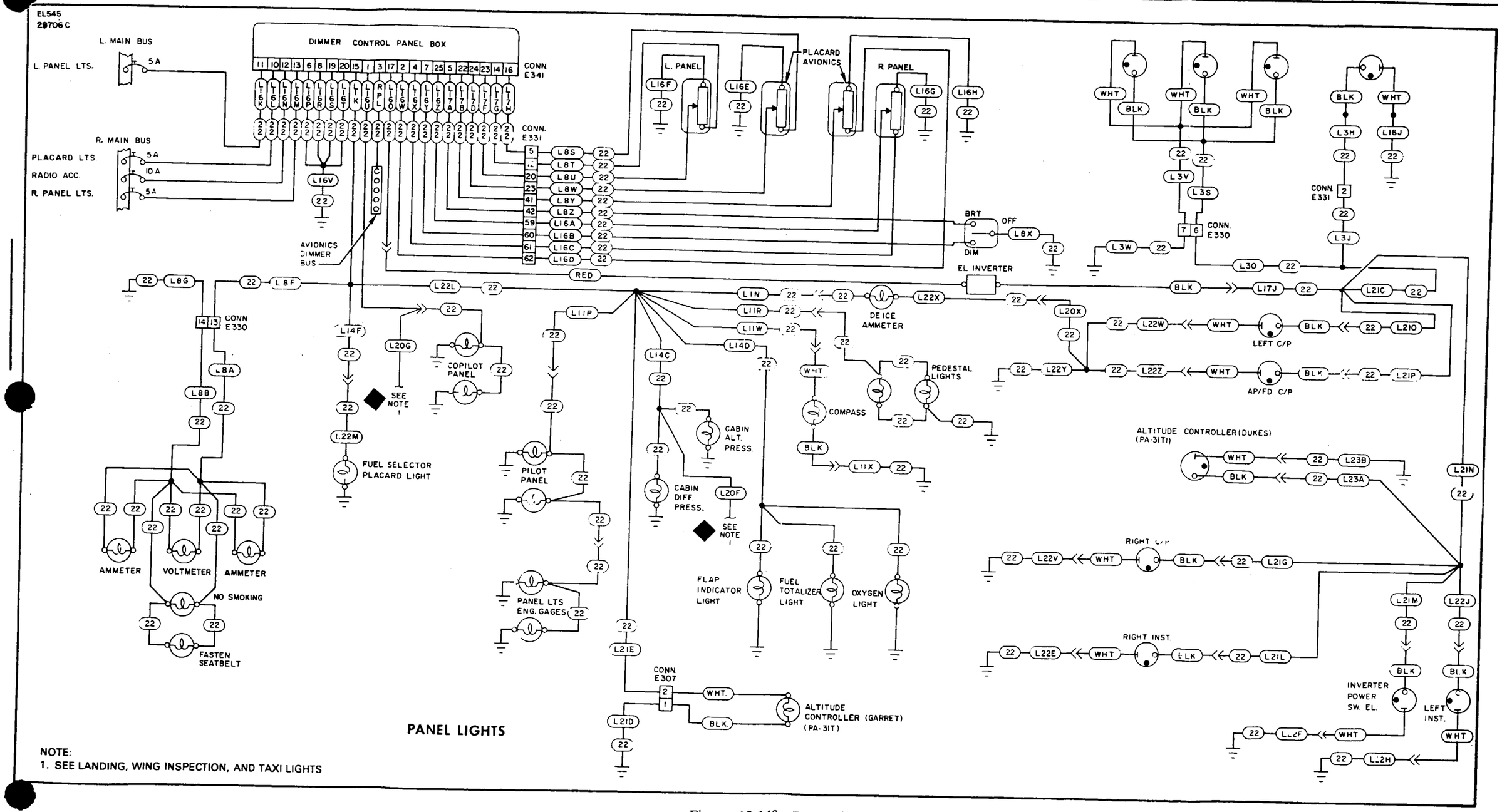

Figure 15-140. Panel Lights,
PA-31T S/N 31T-8120001 and up and PA-31T1 S/N 31T-8104001 and up

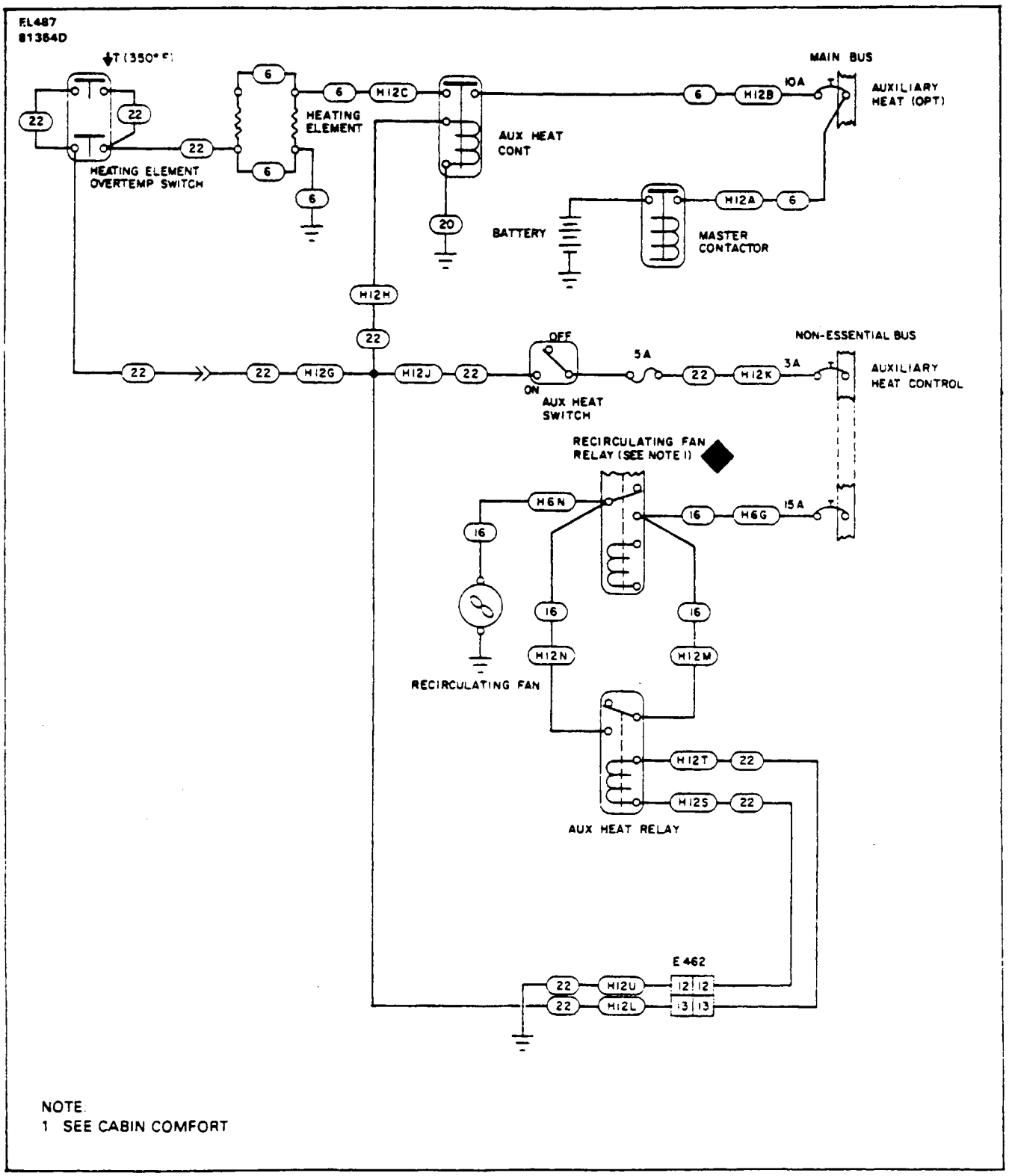

Figure 15-141. Auxiliary Heat (Optional)

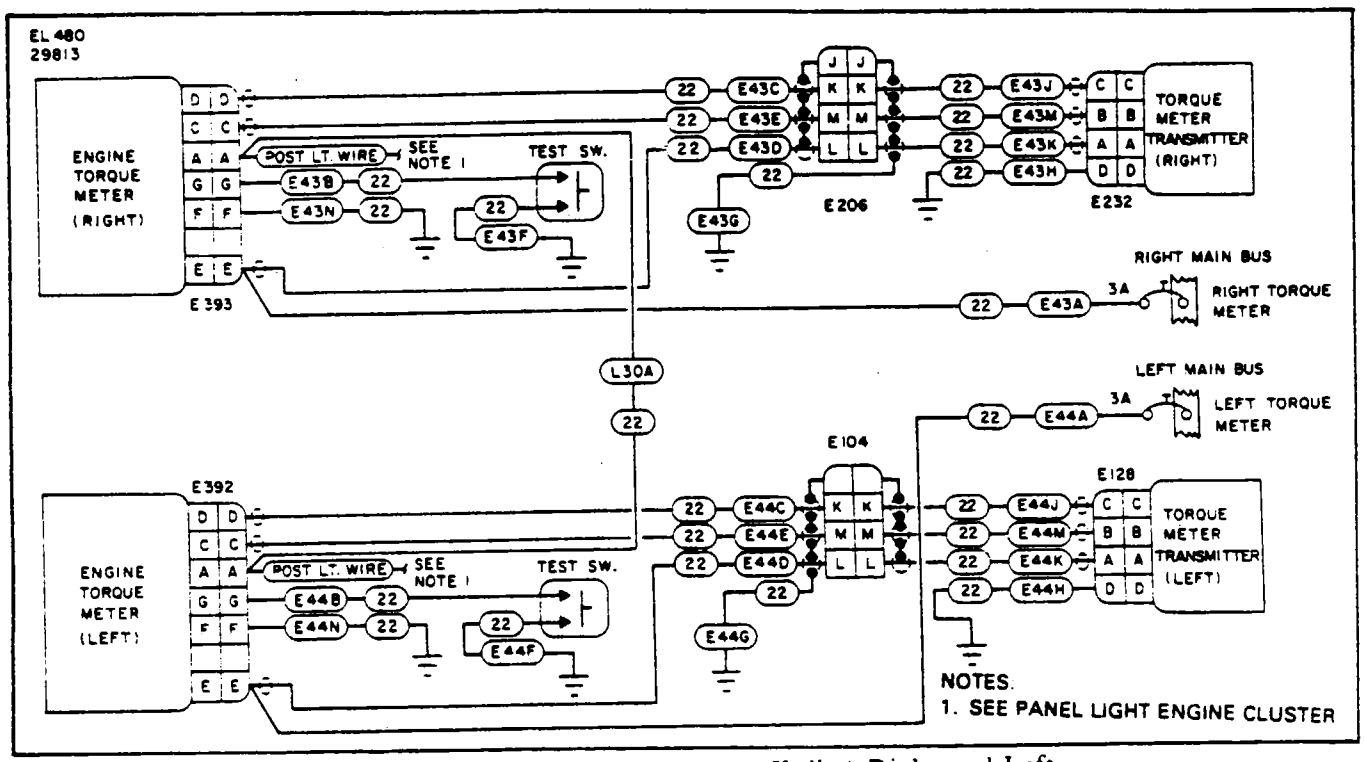

Figure 15-142. Torque System (Weston Kulite) Right and Left

INTENTIONALLY LEFT BLANK

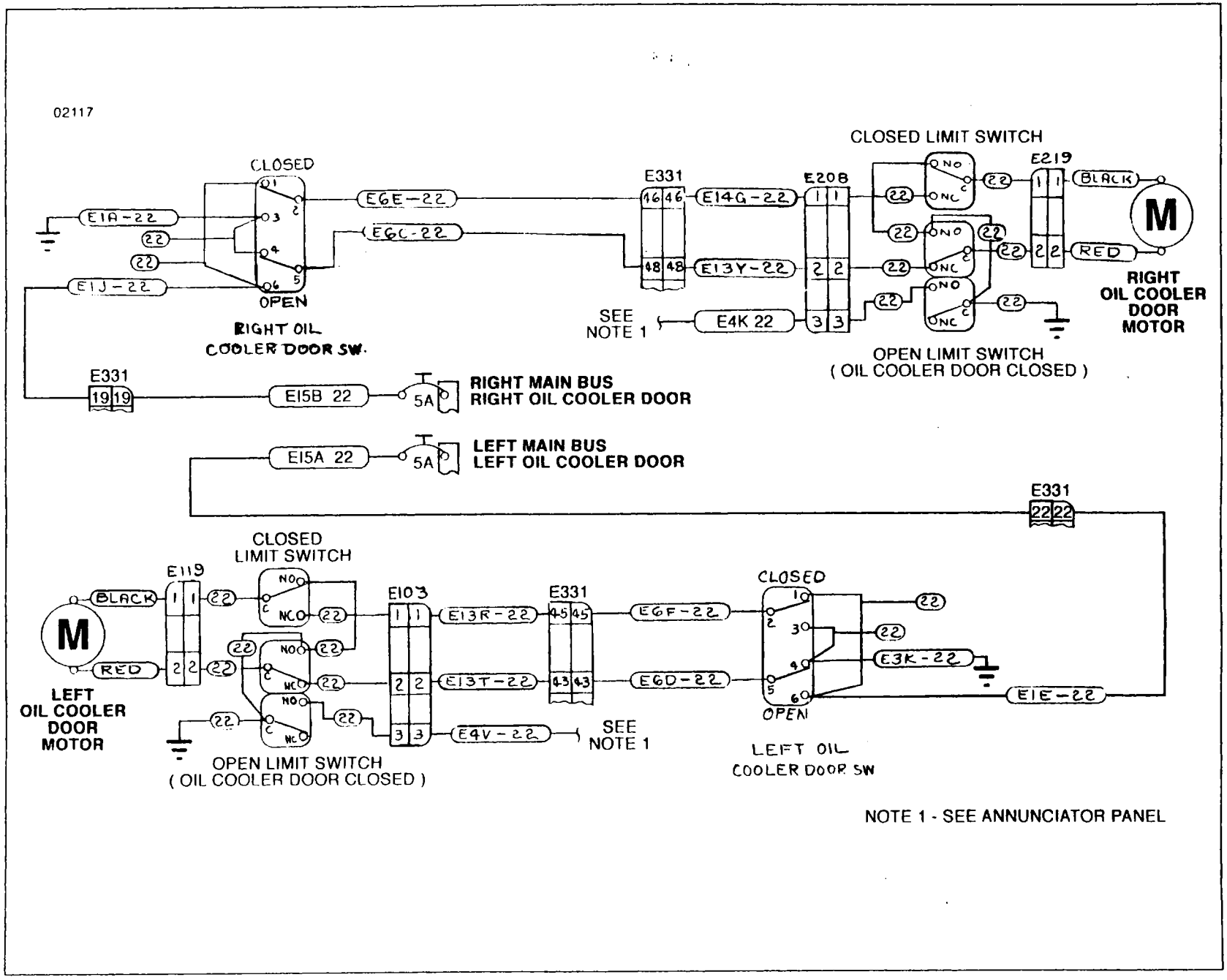

Figure 15-143. Oil Cooler Doors - Right and Left, PA-31T1 S/N 31T-1104008 & up

PAGES 7I10 THRU 7L24 INTENTIONALLY BLANK

Cheyenne

AIRPLANE

SERVICE MANUAL

CARD 8 OF 8

PA-31T CHEYENNE

PA-31T CHEYENNE II

PA-31T1 CHEYENNE I

PA-31T1 CHEYENNE IA

PA-31T2 CHEYENNE II XL

PIPER AIRCRAFT CORPORATION

PART NUMBER 753 826

8A1

JULY 2, 1984
INTERIM REVISION: OCTOBER 15, 1997

SERIAL NUMBER INFORMATION

PA-31T, CHEYENNE

Serial Numbers 31T-7400002 to 31T-7720069 inclusive.

PA-31T, CHEYENNE II

Serial Numbers 31T-7820001 to 31T-8120104 inclusive.

PA-31T1, CHEYENNE I

Serial Numbers 31T-7804001 to 31T-8104101 inclusive.

PA-31T1, CHEYENNE IA

Serial Numbers 31T-8304001 to 31T-8304003 inclusive;
(then, serial number series changed to)
Serial Numbers 31T-1104004 to 1104017 inclusive.

PA-31T2, CHEYENNE II XL

Serial Numbers 31T-8166001 to 31T-8166076 inclusive;
(then, serial number series changed to)
Serial Numbers 31T-1166001 to 1166008 inclusive.

AEROFICHE EXPLANATION AND REVISION STATUS

Service manual information incorporated in this set of Aerofiche cards has been arranged in accordance with general specifications of Aerofiche adopted by General Aviation Manufacturer's Association, (GAMA).

Information compiled in this Aerofiche Service Manual will be kept current by revisions distributed periodically. These revisions supersede all previous revisions and are complete Aerofiche card replacements and supersede Aerofiche cards of same number in set.

Conversion of Aerofiche alpha/numeric code numbers:
First number is Aerofiche card number.
Letter is horizontal line reference per card.
Second number is vertical line reference per card.
Example: 2J16 Aerofiche card number two of given set, Grid location J16.

To aid in locating the various chapters and related service information desired, the following is provided:

1. At the beginning of Aerofiche Card No. 1:
   a A complete Section Index for all fiche in this set.
   b. A complete list of Illustrations for all fiche in this set.
   c. A complete list of Tables for all fiche in this set.
   d. A complete list of Charts for all fiche in this set.
2. At the beginning of each subsequent Aerofiche Card:
   a A complete Section Index for all fiche in this set.
   b. A complete list of Illustrations for that fiche only.
   c. A complete list of Tables for that fiche only.
   d. A complete list of Charts for that fiche only.
3 A complete Table of Contents showing paragraph titles and appropriate grid location numbers is given at the beginning of each Section relating to the information within that Section.
4. Identification of revised material:

   Revised text and illustrations are indicated by a black vertical line along the left-hand margin of the frame, opposite revised, added or deleted material. Revision lines indicate only current revisions with changes and additions to or deletions of existing text and illustrations. Changes in capitalization, spelling, punctuation, indexing, physical location of material, or complete page additions are not identified by revision lines.

AEROFICHE EXPLANATION AND REVISION STATUS (cont)

5. Revisions to Service Manual 753 826 issued December 1973 are as follows:

Revision	Publication Date	Aerofiche Card Effectivity
ORG731208	December 8, 1973	
CR810206	February 6, 1981	1, 2, 3, 4, 5, 6, 7 and 8
PR810923	September 23, 1981	1, 2, 3, 4, 5, 6, 7 and 8
PR810925	September 25, 1981	1 Only
PR820215	February 15, 1982	1, 2, 3, 4, 5, 6, 7 and 8
PR821015	October 15, 1982	1, 2, 3, 4, 5, 6, 7 and 8
PR830425	April 25, 1983	1, 2, 3, 4, 5, 6, 7 and 8
PR840105	January 5, 1984	1, 2, 3, 4, 5, 6, 7 and 8
PR840323	March 23, 1984	1, 2, 3, 4, 5, 6, 7 and 8
PR840702	July 2, 1984	1, 2, 3, 4, 5, 6, 7 and 8
IR860220	February 20, 1986	3
IR860430	April 30, 1986	3
IR860821	August 21, 1986	1
IR871009	June 15, 1988	2
IR900313	March 13, 1990	1
IR941019	October 19, 1994	1 and 2
IR950320	March 20, 1995	1
IR971015 *	October 15, 1997	1, 2, 3, 4, 5, 6, 7 and 8

*** INTERIM REVISION TO SERVICE MANUAL 753-826**

Revisions appear in all eight Aerofiche cards. Discard your entire existing Aerofiche card set (Cards 1 - 8) and replace it with the revised Aerofiche card set (Cards 1 - 8) dated 10/15/97.

Consult the Customer Service Information Catalog Aerofiche (P/N 1753-755) for current revision dates for this manual.

SECTION INDEX

SECTION	AEROFICHE CARD NO. 1	GRID NO.
I	INTRODUCTION	1A19
II	HANDLING AND SERVICING	1A22
III	INSPECTION	1D23
IV	STRUCTURES	1E13
V	SURFACE CONTROLS	1I8
	AEROFICHE CARD NO. 2	
VI	HYDRAULIC SYSTEM	2A10
VII	LANDING GEAR AND BRAKE SYSTEM	2D19
VIII	POWER PLANT (PA-31T AND PA-31T1)	2I11
	AEROFICHE CARD NO. 3	
VIIIA	POWER PLANT (PA-31T2)	3A8
IX	FUEL SYSTEM	3D7
X	INSTRUMENTS	3F2
	AEROFICHE CARD NO. 4	
XI	ELECTRICAL SYSTEM	4A7
	AEROFICHE CARD NO. 5	
XII	ELECTRONICS	5A9
XIII	ENVIRONMENTAL CONTROL SYSTEM (PA-31T AND PA-31T1)	5B1
	AEROFICHE CARD NO. 6	
XIIIA	ENVIRONMENTAL CONTROL SYSTEM (PA-31T2)	6A8
XIV	ACCESSORIES AND UTILITIES	6C1
	AEROFICHE CARD NO. 7	
XV	ELECTRICAL SCHEMATICS (PA-31T AND PA-31T1)	7A5
	AEROFICHE CARD NO. 8	
XVA	ELECTRICAL SCHEMATICS (PA-31T2)	8A5

INDEX - ELECTRICAL SCHEMATIC

PA-31T2

FIGURE NO.	SCHEMATIC	GRID NO.
	ANNUNCIATOR	
	Annunciator Panel	
15A-1	S/N's: 31T-8166001 to 31T-8166072; 31T-8166034 to 31T-8166061	8A11
15A-1a	S/N's: 31T-8166033; 31T-8166062 to 31T-8166076, and, 31T-1166001 and up	8A13
	COMFORT SYSTEMS	
	Cigar Lighter and Flush Toilet (Optional)	
15A-9	S/N's: 31T-8166001 to 31T-8166076	8A23
15A-9a	S/N's: 31T-1166001 and up	8A23
15A-18	Heated Thermos (Front/Rear)	8B13
15A-35	Razor/Inverter (Optional)	8C12
	DEICE SYSTEMS	
15A-21	Air Intake, Ice Deflection, Power Control, Propeller (Left)	8B16
15A-22	Air Intake, Ice Deflection, Power Control, Propeller (Right)	8B18
15A-15	Fuel Heat Continuous (Left)	8B8
15A-16	Fuel Heat Continuous (Right)	8B10
15A-30	Pitot Heat	8C8
15A-37	Stall Warning Vane	8C2
15A-42	Surface (Electropneumatic)	8C18
15A-45	Windshield Heat (Left/Right)	8C20
	ELECTRICAL SYSTEMS	
15A-32	Bus Power Distribution	8C9
	Starter/Generator - Left	
15A-38	S/N's: 31T-8166001 to 31T-8166076	8C14
15A-39	S/N's: 31T-1166001 and up	8C16
	Starter/Generator - Right	
15A-40	S/N's: 31T-8166001 to 31T-8166076	8C13
15A-41	S/N's: 31T-1166001 and up	8C17
15A-48	Electroluminescent Panel/Inverter	8C23
	ENGINE SYSTEMS	
	Bleed Air Control	
15A-3	S/N's: 31T-8166001 to 31T-8166076	8A16
15A-3a	S/N's: 31T-1166001 and up	8A17
	Fire Extinguishers	
15A-13	S/N's: 31T-8166001 to 8166061	8B9
15A-14	S/N's: 31T-8166062 to 31T-8166076	8B6
15A-14a	S/N's: 31T-1166001 and up	8B7
15A-23	Ignition (Left/ Right)	8B20

INDEX - ELECTRICAL SCHEMATIC (cont.)

PA-31T2

FIGURE NO.	SCHEMATIC	GRID NO.
	ENGINE SYSTEMS (cont.)	
	Ignition, Auto (Left/Right) Optional	
15A-24	S/N's: 31T-8166001 to 31T-8166076	8B2
15A-24a	S/N's: 31T-1166001 and up	8B22
15A-28	Oil Cooler Doors (Left/Right)	8C6
	ENVIRONMENTAL SYSTEMS	
15A-4	Cabin Temperature Controller	8A19
15A-10	Cabin Pressure Controller	8A24
15A-12	Environmental Control System (E.C.S.) and By-Pass	8B3
15A-36	Recirculating Fan	8C12
	FLAP SYSTEMS	
15A-47	Wing Flap (Calco)	8C22
	FUEL SYSTEMS	
15A-15	Auxiliary and Main Pumps, Fuel Flow, Press. Temp. Quantity, Totalizer (Left)	8B8
15A-16	Auxiliary and Main Pumps, Fuel Flow, Press., Temp., Quantity, Totalizer (Right)	8B10
	INDICATORS	
15A-17	Attitude Horizon, Directional Gyro, Turn and Bank (Left/Right)	8B12
15A-27	Clock (Optional)	8B18
15A-19	Hourmeter/Outside Air Temp.	8B13
15A-29	Oil Temp., Oil Press. (Left/Right)	8C7
15A-33	Prop and Gas Generator Tach (Left/Right)	8C10
	Torquemeter (Left/ Right)	
15A-43	S/N's: 31T-8166001 to 8166061	8C19
15A-44	S/N's: 31T-8166062 and up	8C19
15A-48	Voltmeter	8C11
	LANDING GEAR	
	Landing Gear Control and Warning	
15A-25	S/N's: 31T-8166001 to 31-8166076	8B23
15A-25a	S/N's: 31T-1166001 and up	8C1
	LIGHTING - EXTERNAL	
15A-2	Anti-Collision Strobe	8A15
	Landing, Tax, and Wing Inspection Lighting	
15A-26	Early Models	8C3
15A-27	Later Models	8C4
15A-27a	S/N's: 31T-1166001 and up	8C5
15A-31	Position	8C8

INDEX - ELECTRICAL SCHEMATIC (cont.)

PA-31T2

FIGURE NO.	SCHEMATIC	GRID NO.
	LIGHTING - INTERNAL	
15A-11	Ajar Aisle, Exit, with Time Delay	8B1
15A-8	Baggage, Dome Map, Overhead, Cabinets	8A22
	Panel Lights	
15A-48	S/N's: 31T-8166001 to 8166076	8C23
15A-48a	S/N's: 31T-1166001 and up	8D1
	PROPELLER	
15A-40	Autofeather	8D3
15A-20	H.T.G. and Low Pitch Beta Lights (Left/Right)	8B14
15A-33	Prop and Gas Generator Tach (Left/Right)	8C10
15A-34	Prop Sync	8C11
	WARNING SYSTEMS	
	Annunciator Panel	
15A-1	S/N's: 31T-8166001 to 31T-8166032; 31T-8166034 to 31T-8166061	8A11
15A-1a	S/N's: 31T-8166033; 31T-8166062 to 31T-8166076, and, 31T-11660021 and up	8A13
15A-5	Chimes	8A20
15A-6	Chimes, Seat Belts, No Smoking (Optional)	8A20
	WINDSHIELD SYSTEMS	
15A-45	Windshield Heat	8C20
15A-46	Windshield Wiper	8C21

LIST OF TABLES

Table		Aerofiche Grid No
XVA-I	Electrical Wire Coding	8A8
XVA-II.	Electrical Symbols	8A9

TABLE XVA-I. ELECTRICAL WIRE CODING

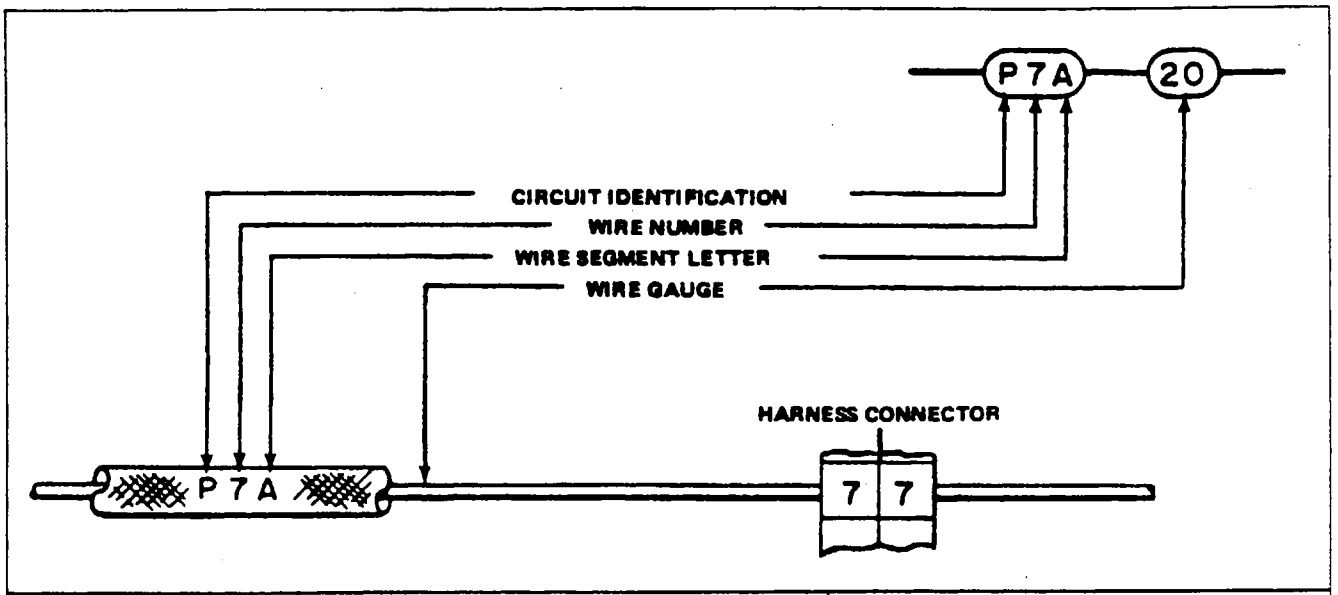

CIRCUIT IDENTIFICATION	CIRCUITS	HARNESS CONNECTOR NUMBERS & LOCATIONS
E	ENGINE INSTRUMENT	E 100 Series = Left Wing and Nacelle.
F	FLIGHT INSTRUMENT	
G	LANDING GEAR	
H	HEATER, VENTILATING	E 200 Series = Right Wing and Nacelle.
J	IGNITION SYSTEM	
L	LIGHTING SYSTEM	
ML	ELECTRICAL GAUGES	
P	PRIMARY POWER	E 300 Series = From Fuselage Station 81.00 Aft.
PD	PROPELLER DEICER	
PF	ALTERNATOR FIELD	
PR	PRESSURIZATION SYSTEM	
Q	FUEL AND OIL	E 400 Series = From Fuselage Station 81.00 Forward.
SD	SURFACE DEICER	
WH	WINDSHIELD HEAT	
WW	WINDSHIELD WIPER	

TABLE XVA-II. ELECTRICAL SYMBOLS

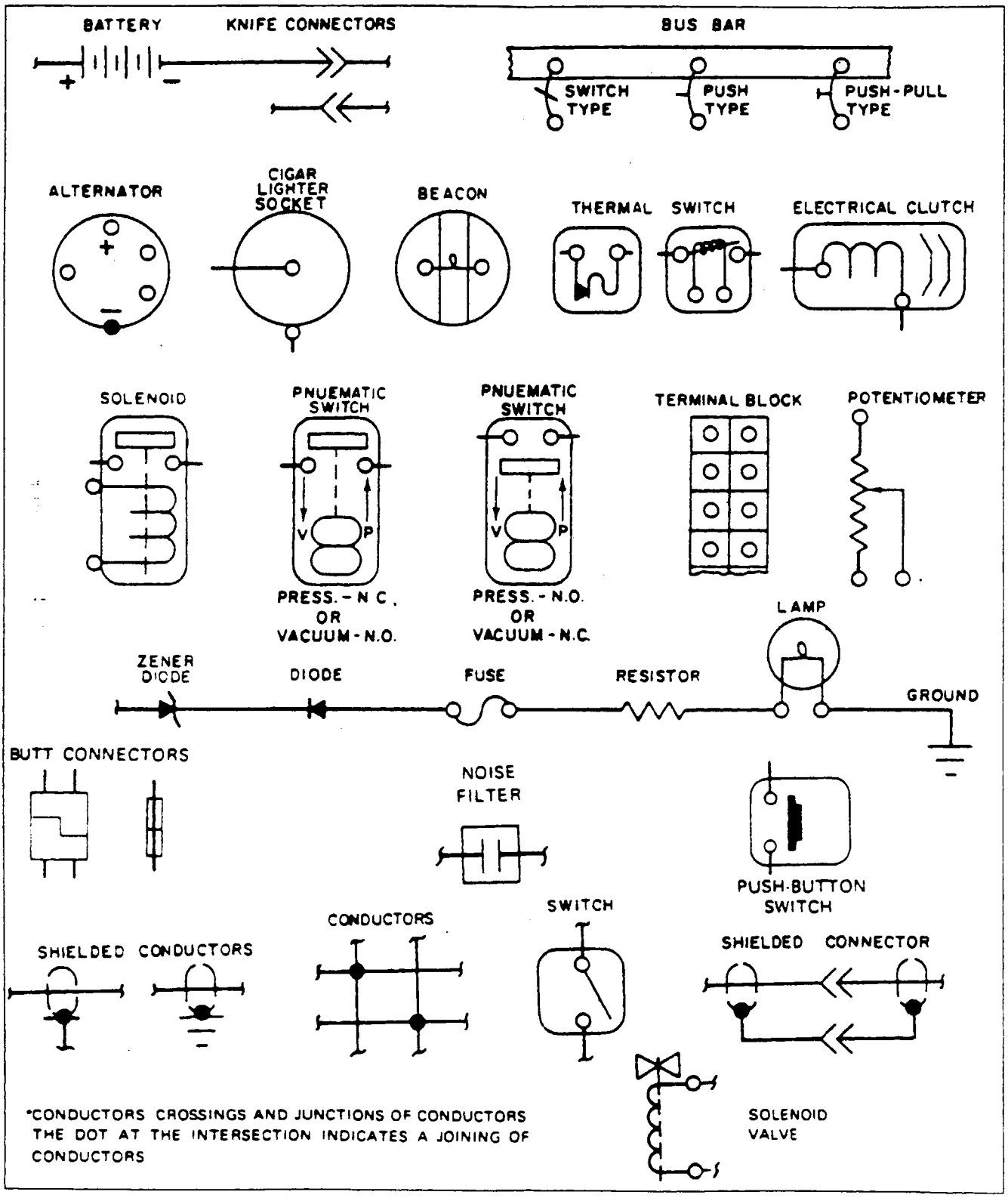

THIS PAGE INTENTIONALLY BLANK

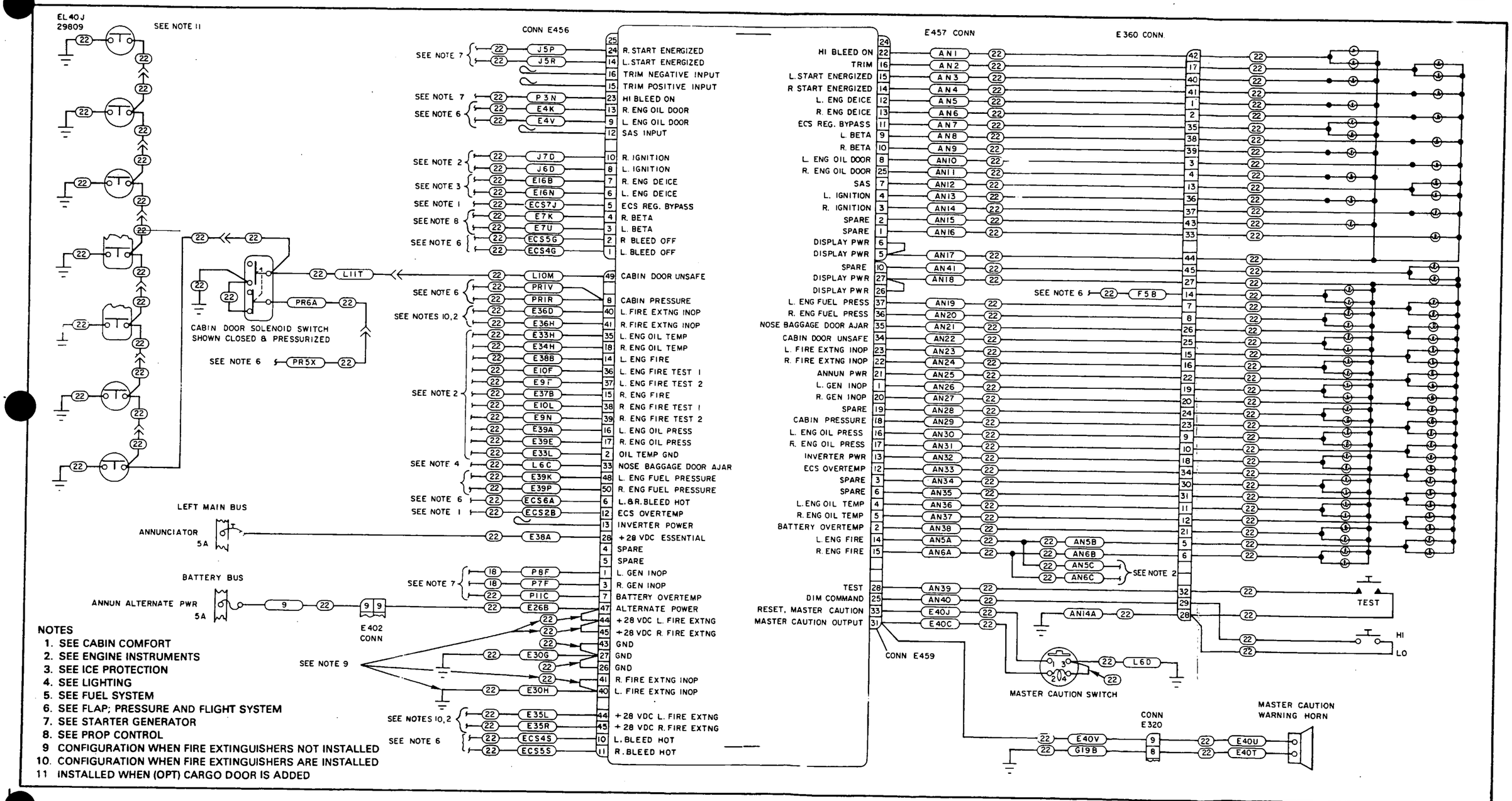

Figure 15A-1. Annunciator Panel; PA-31T S/N 31T-8166001 to 31T-8166032; 31T-8166034 to 31T-8166061

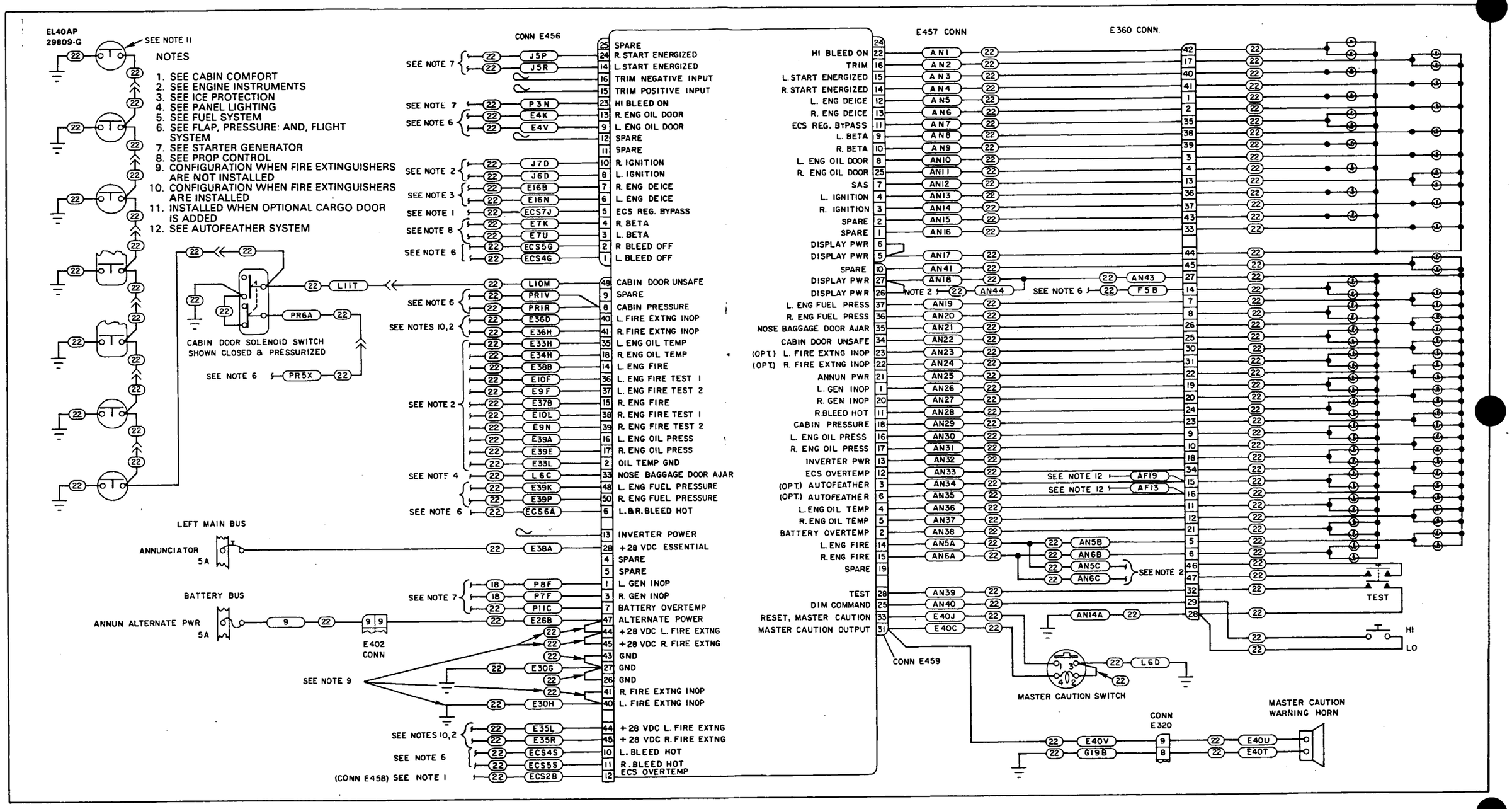

Figure 15A-1a. Annunciator Panel; PA-31T2 S/N 31T-8166033; 31T-8166062 to 31T-8166076 and 31T-1166001 and up

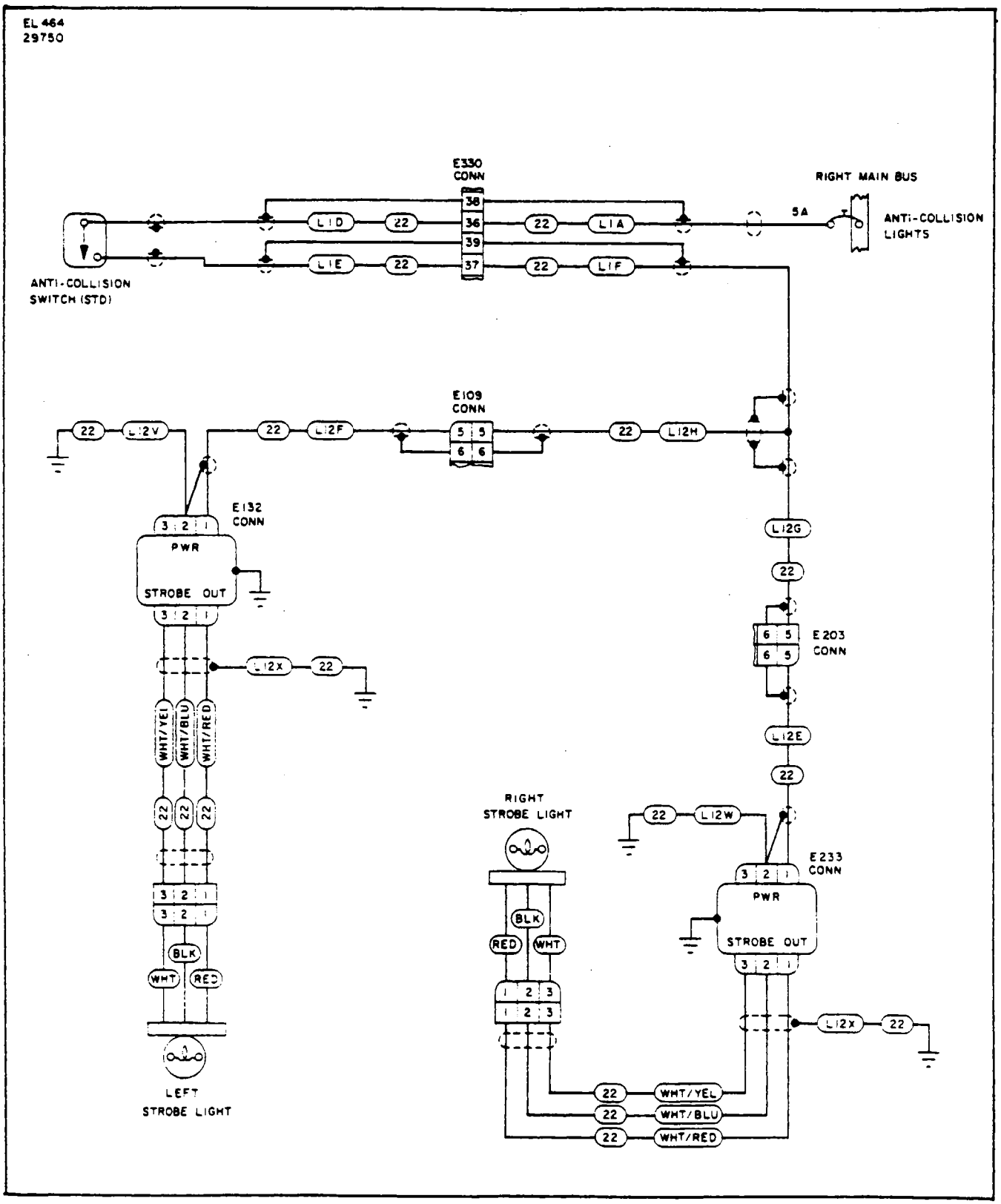

Figure 15A-2. Anti-Collision Light

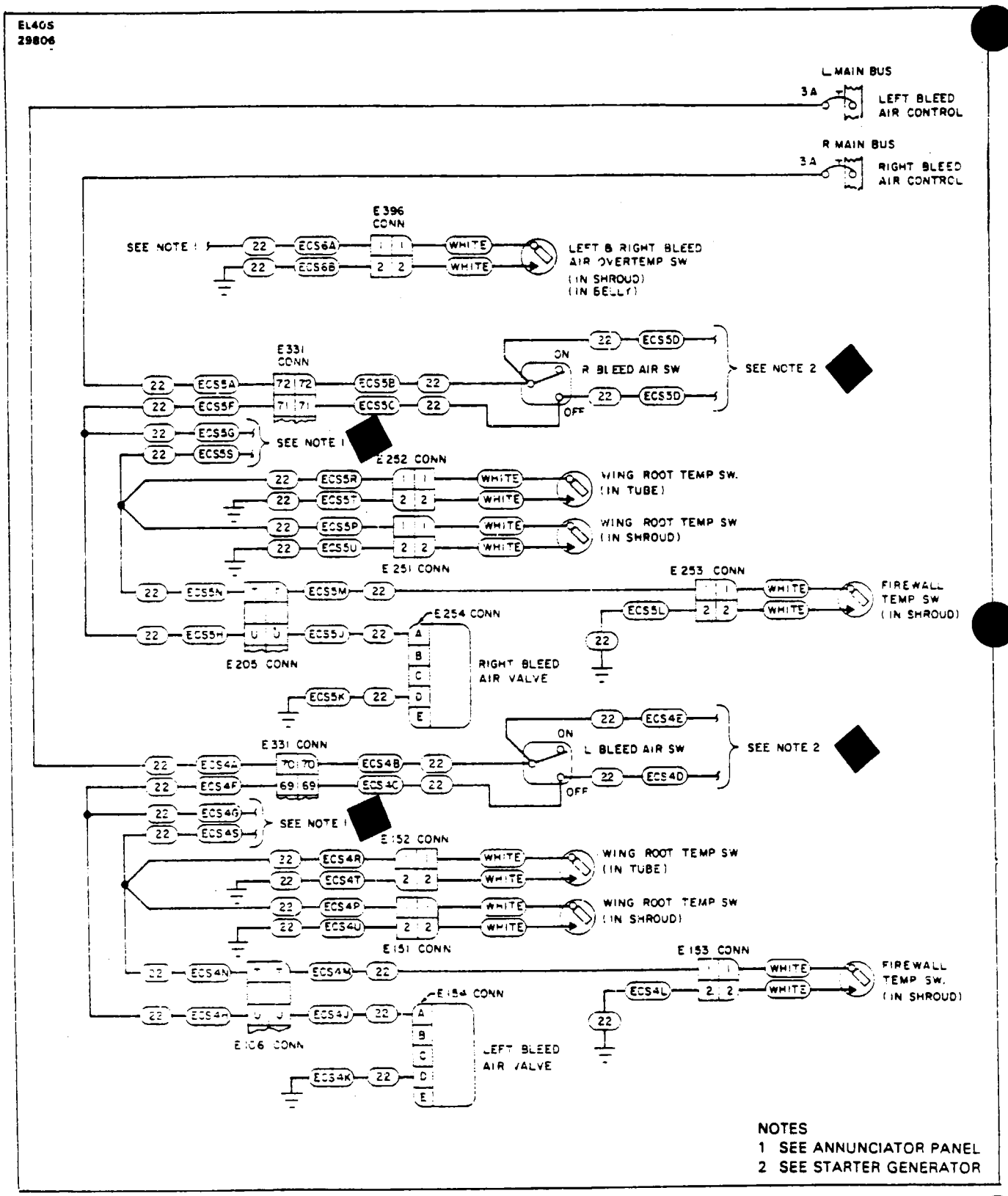

Figure 15A-3 Bleed Air Control: PA-31T2 S/N 31T-8166001 to 31T-8166076

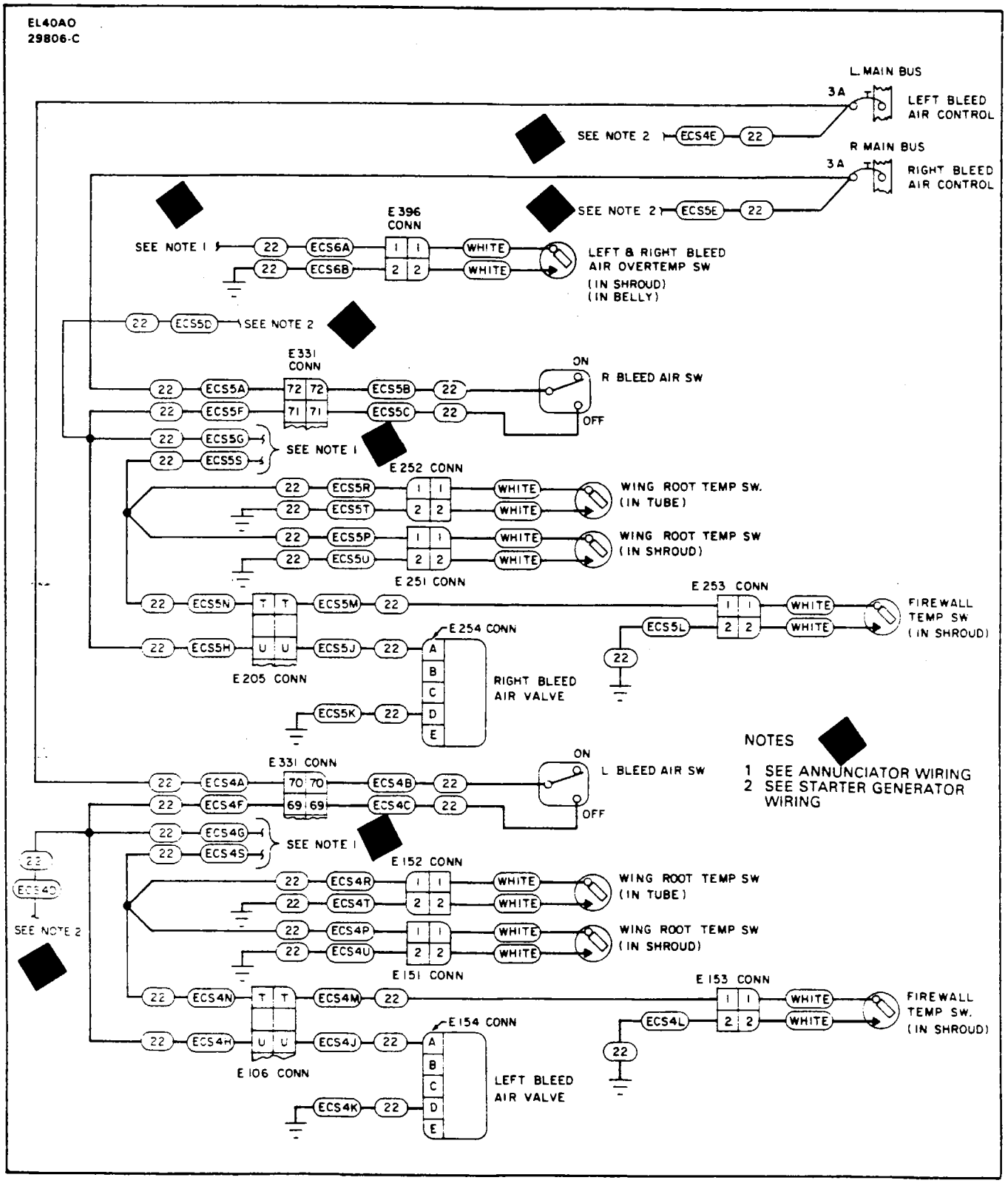

Figure 15A-3a Bleed Air Control, PA-31T2 S/N 31T-1166001 and up

THIS PAGE
INTENTIONALLY LEFT BLANK

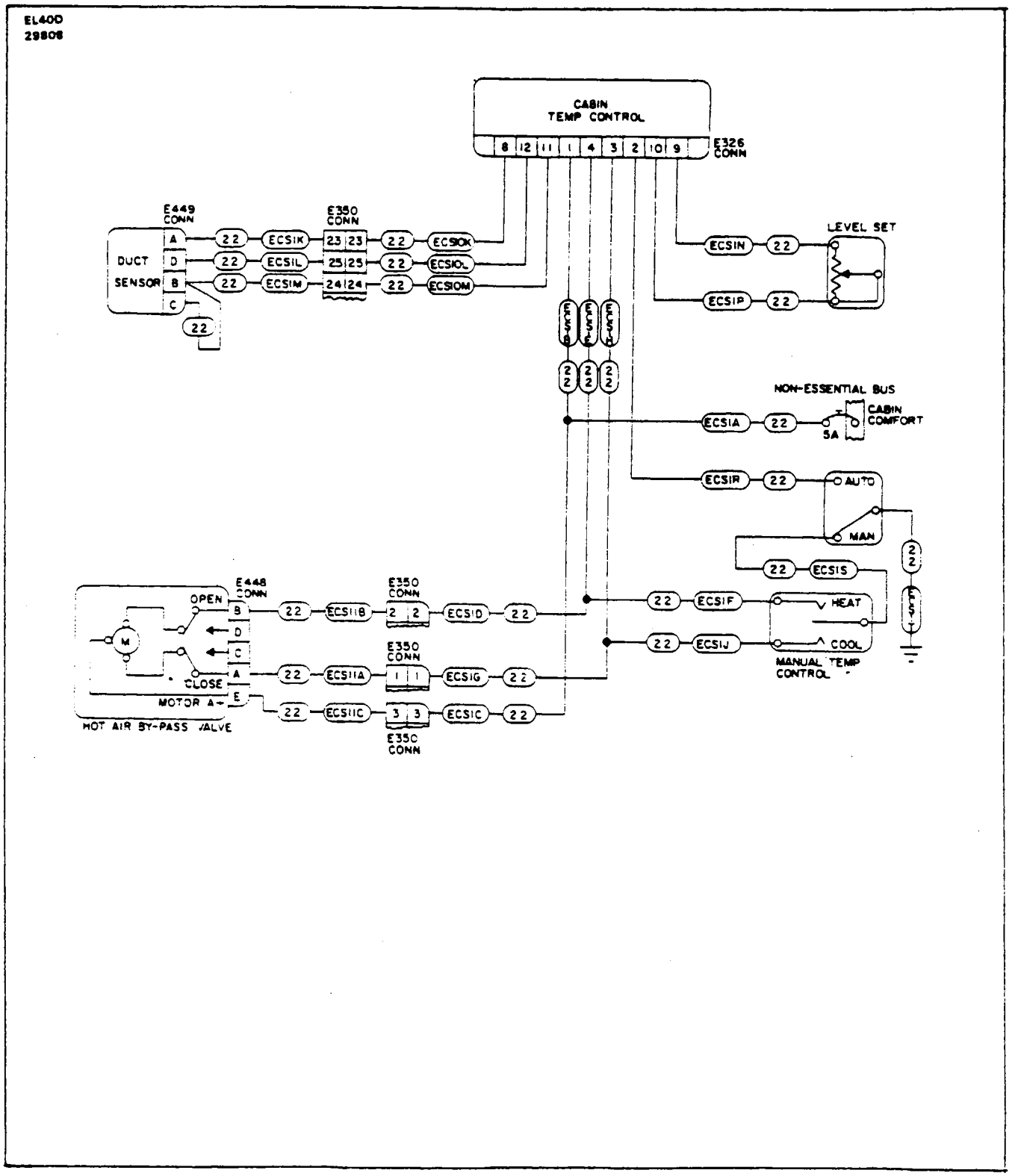

Figure 15A-4 Cabin Temperature Control

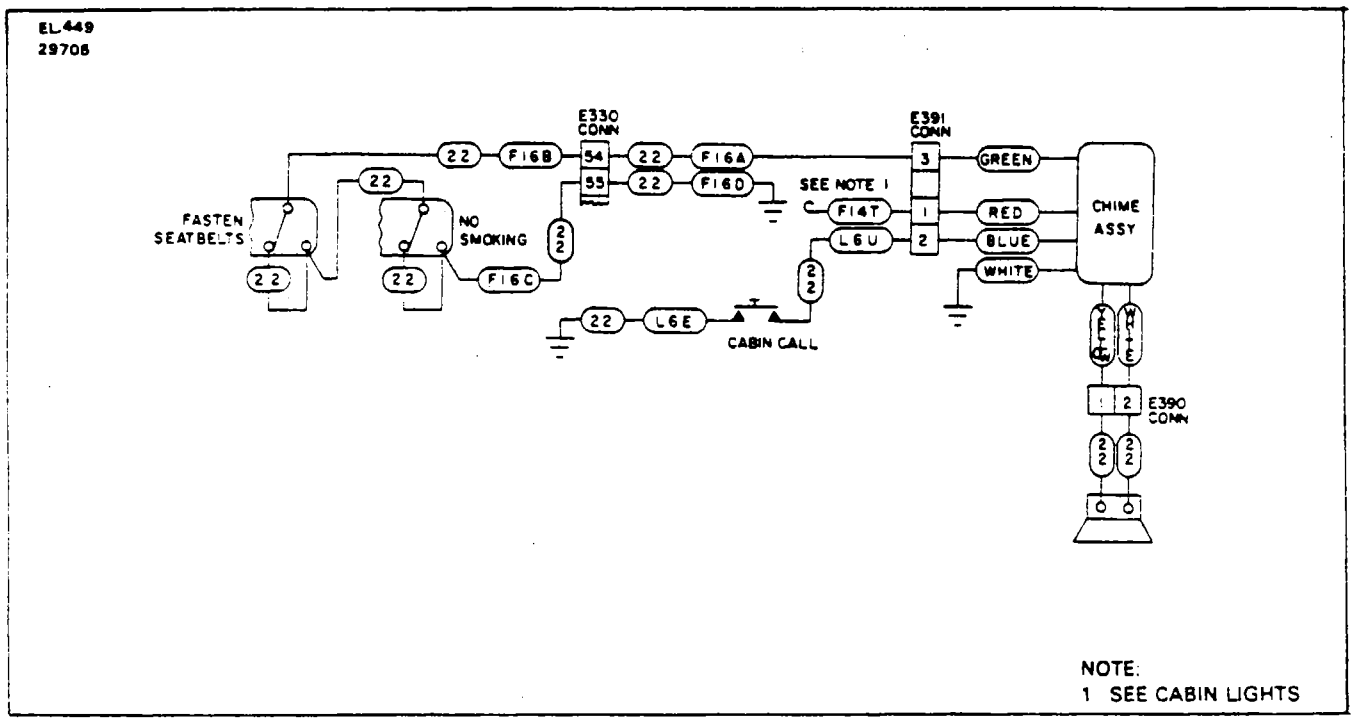

Figure 15A-5. Cabin Chimes

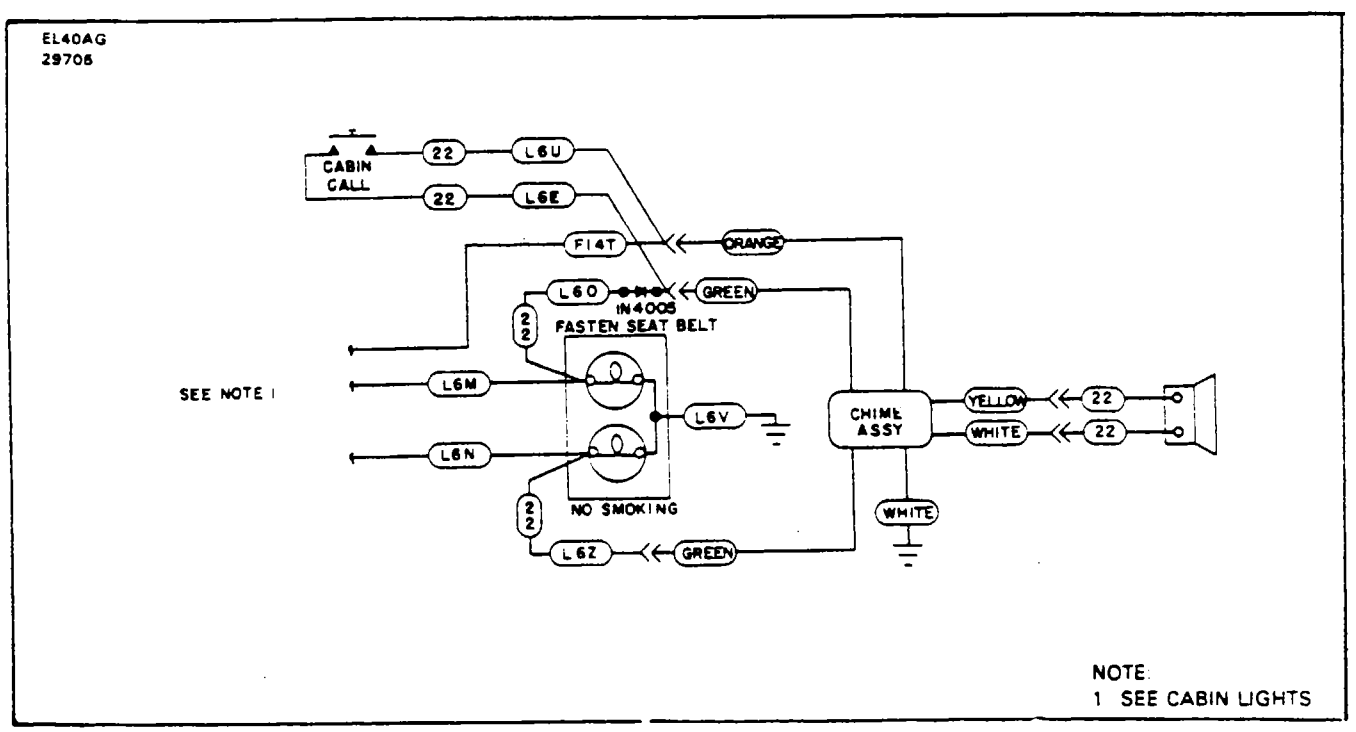

Figure 15A-6. Cabin Chimes (Seat Belt, No Smoking, Opt.)

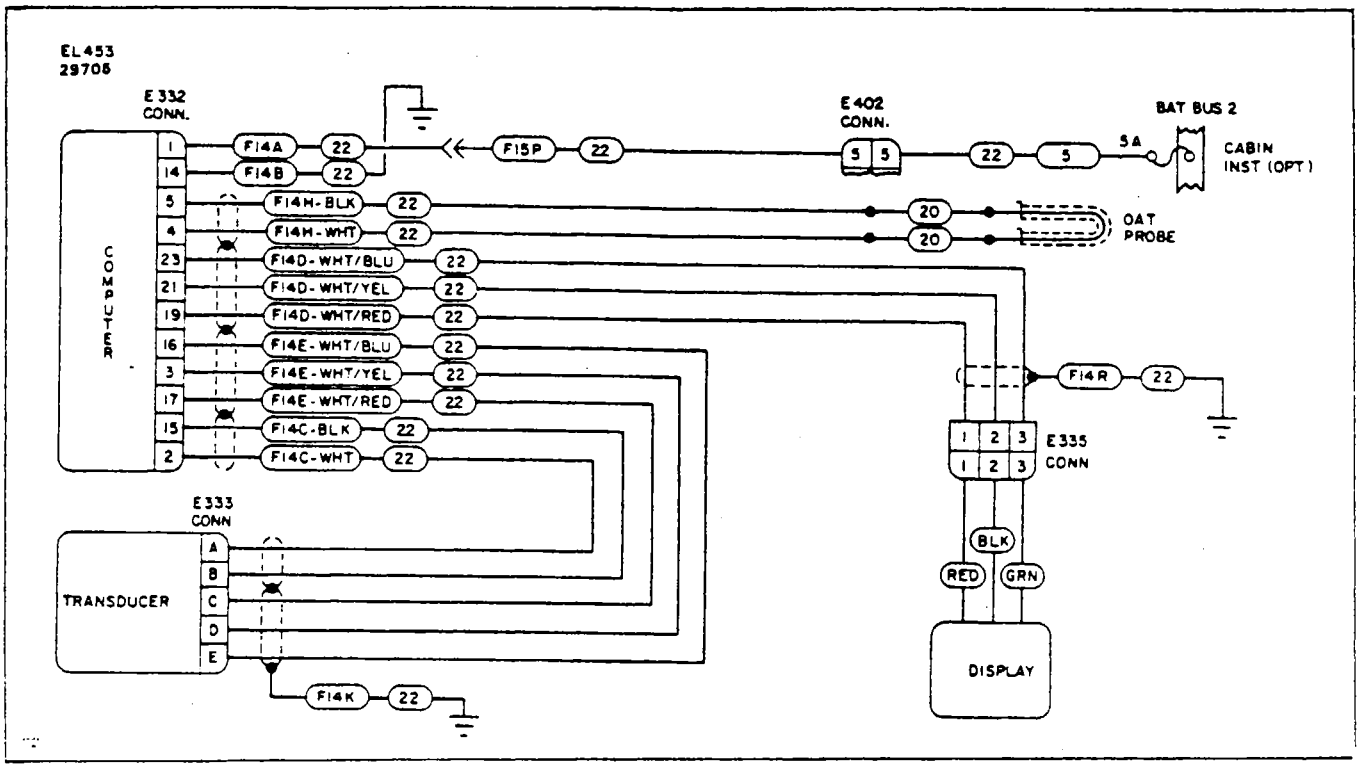

Figure 15A-7 Cabin Instruments (O.A.T Airspeed and Altitude)

INTENTIONALLY LEFT BLANK

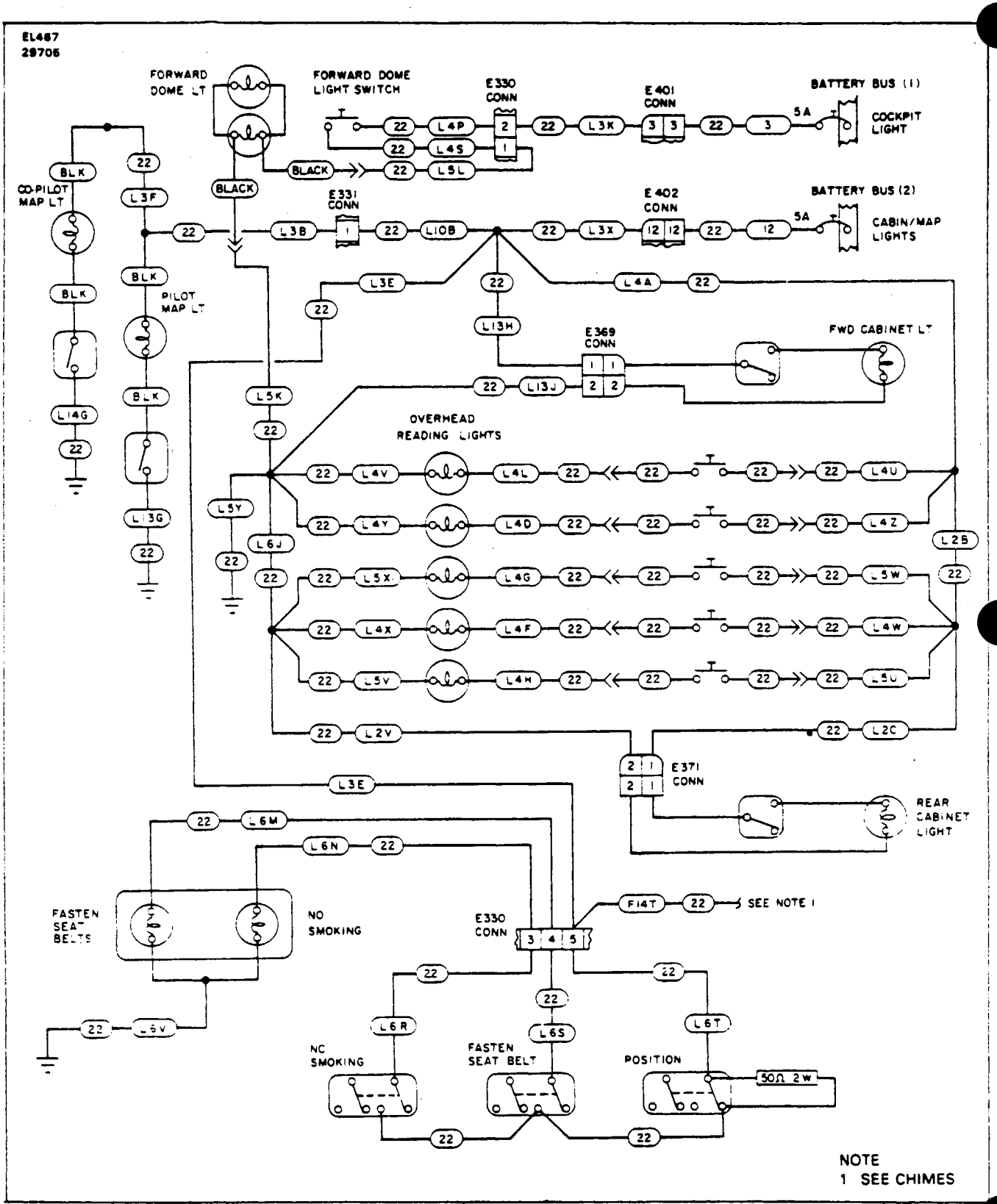

Figure 15A-8 Baggage, Dome, Map, Overhead, Cabinet Lighting, No Smoking and Seat Belts

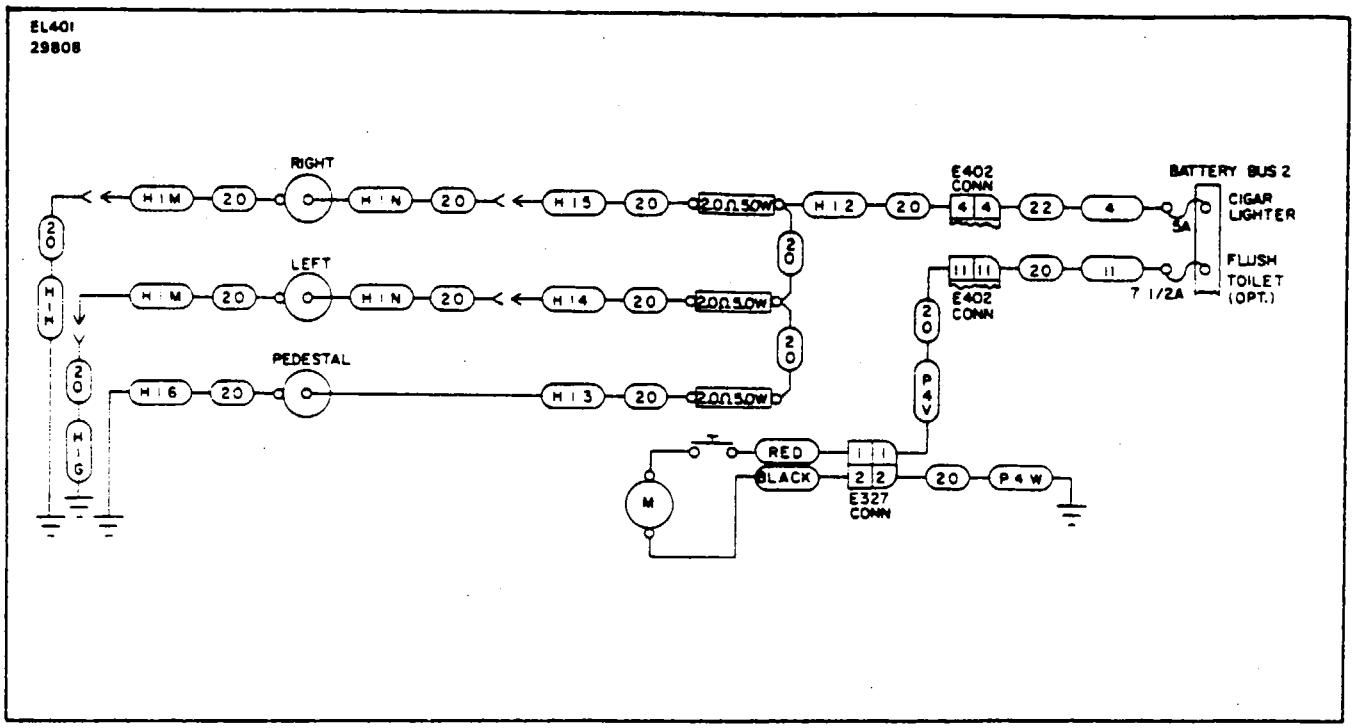

Figure 15A-9 Cigar Lighter; Flush Toilet (Opt)
PA-31T2 S/N 31T-8166001 to 8166076

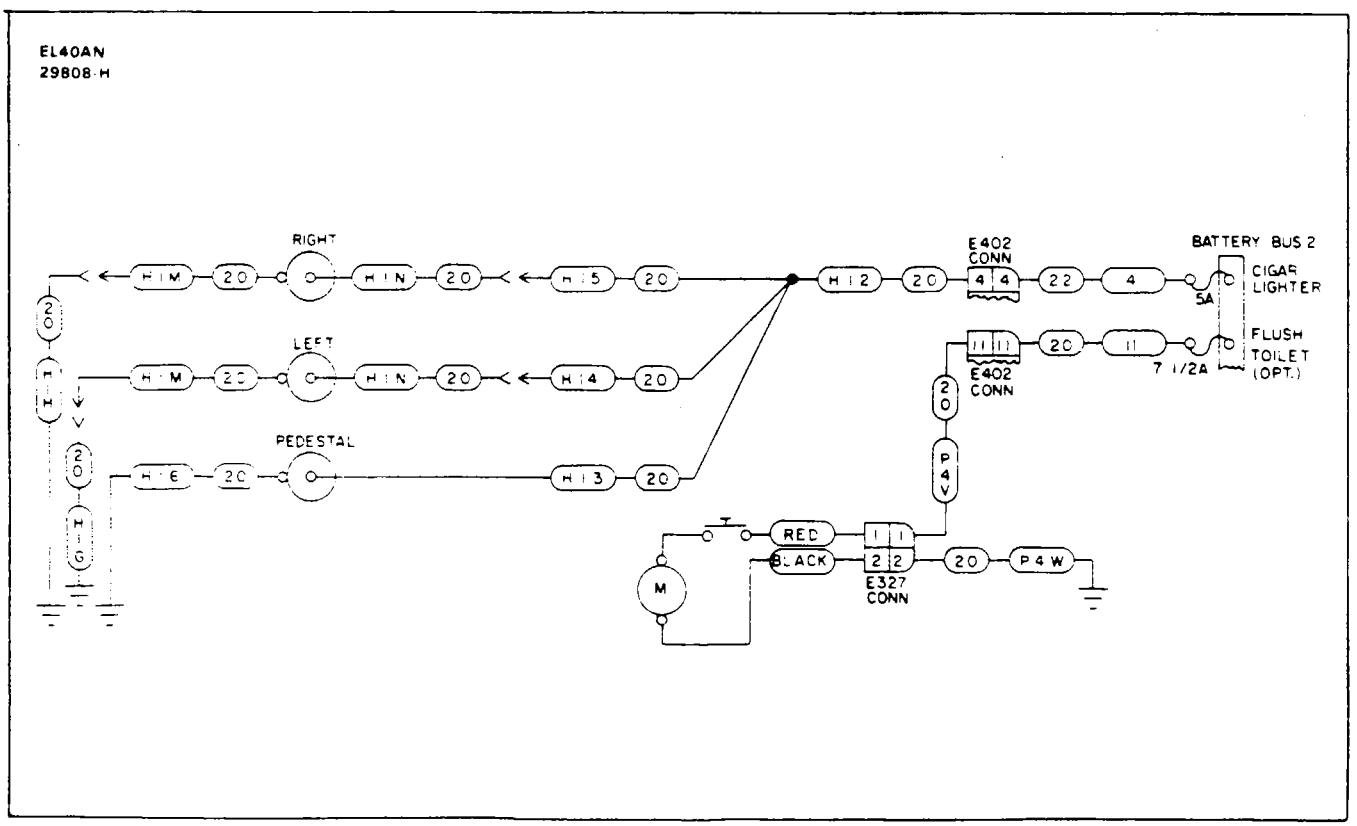

Figure 15A-9a Cigar Lighter (28v); Flush Toilet (Opt)
PA-31T2 S/N 31T-1166001 and up

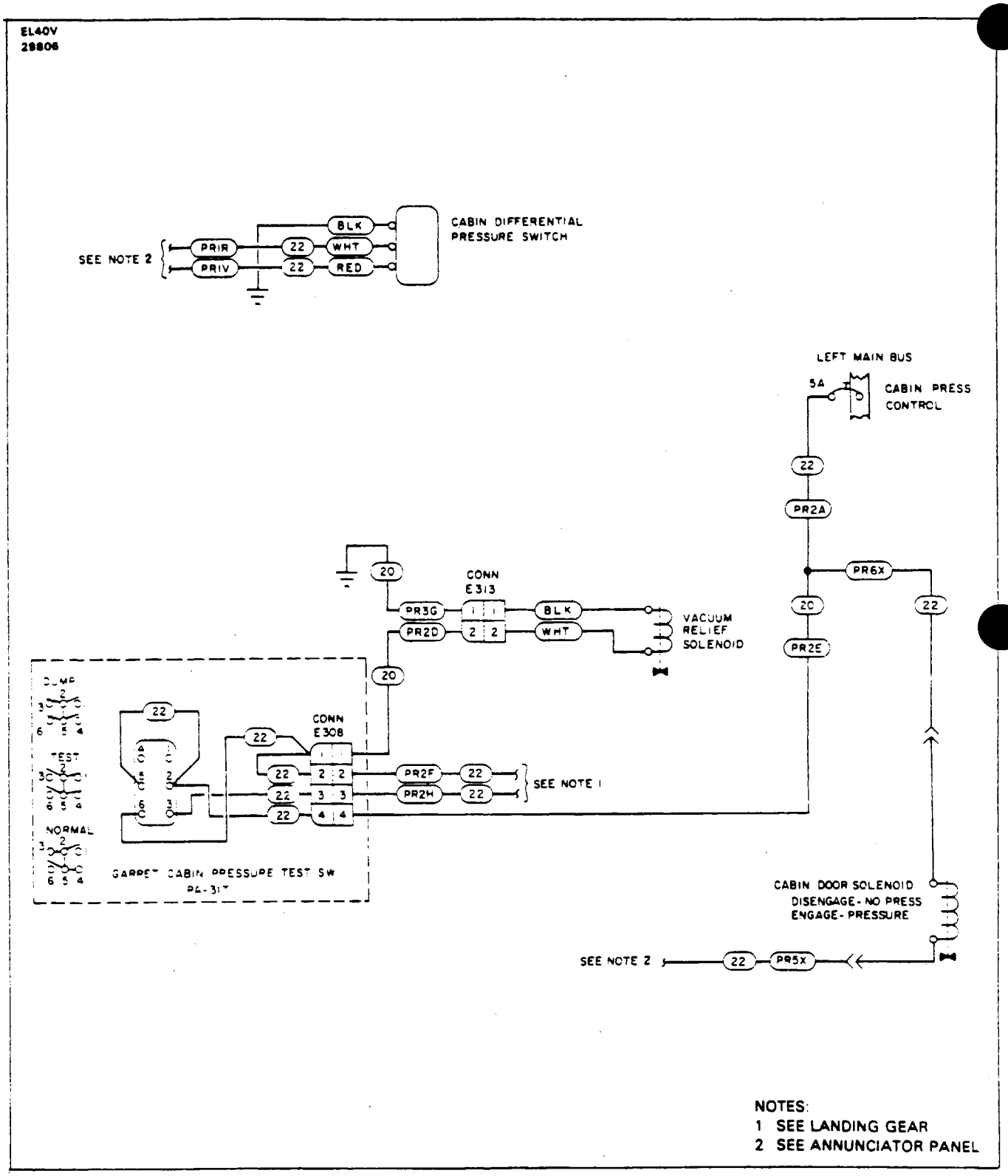

Figure 15A-10. Cabin Pressure Control

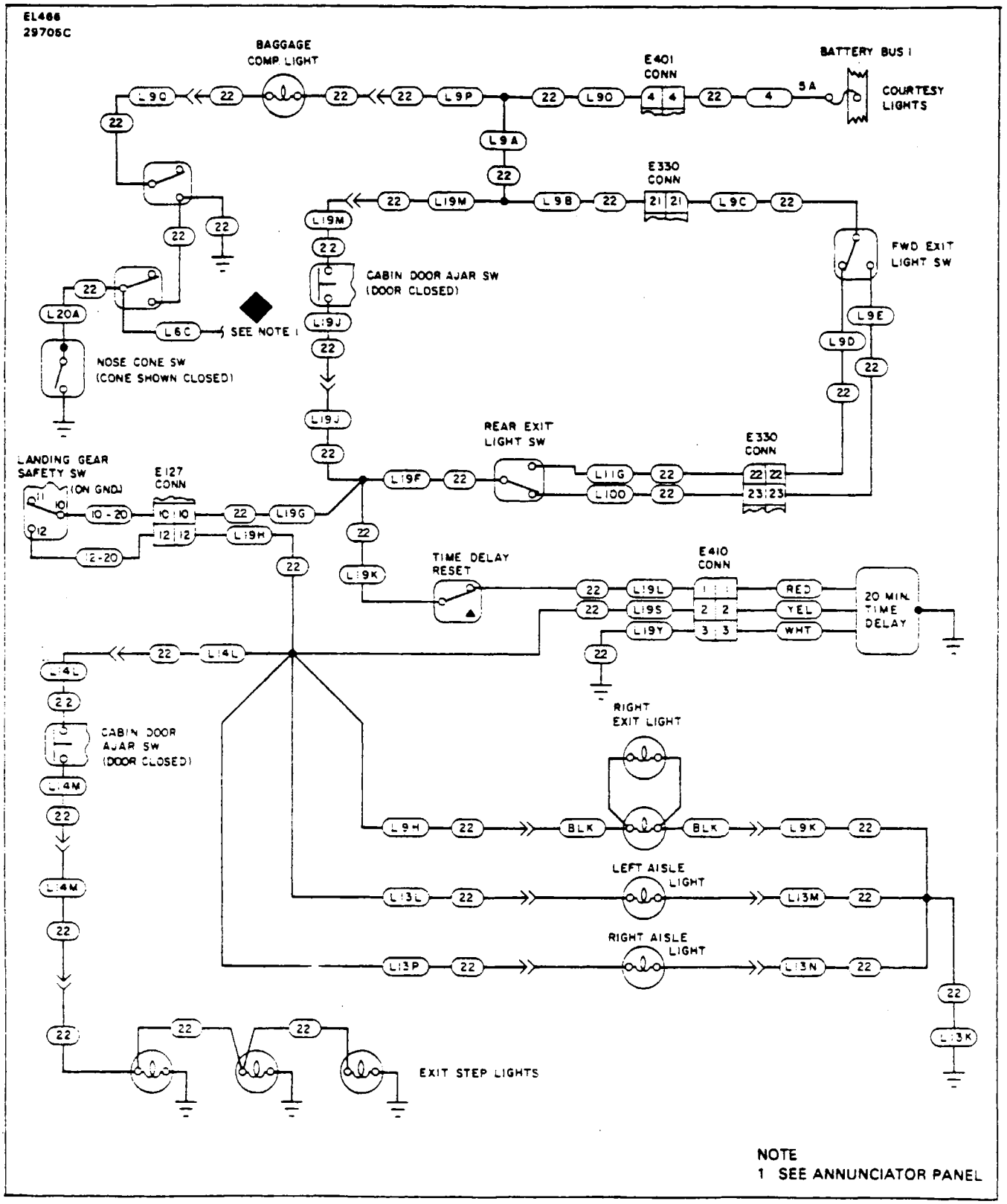

Figure 15A-11. Ajar, Aisle, Exit With Time Delay

THIS PAGE INTENTIONALLY LEFT BLANK

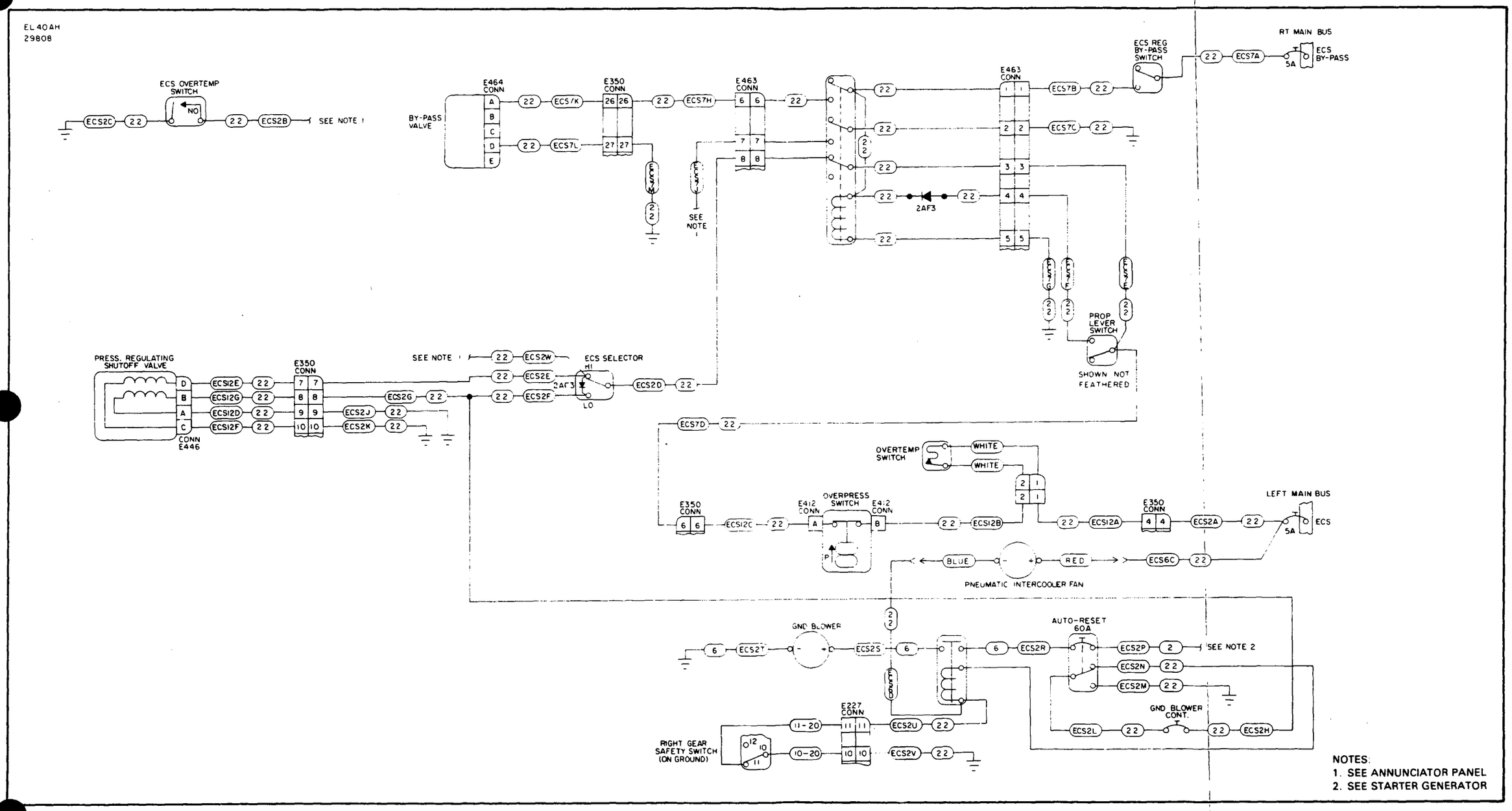

Figure 15A-12. E.C.S. Control and By-Pass

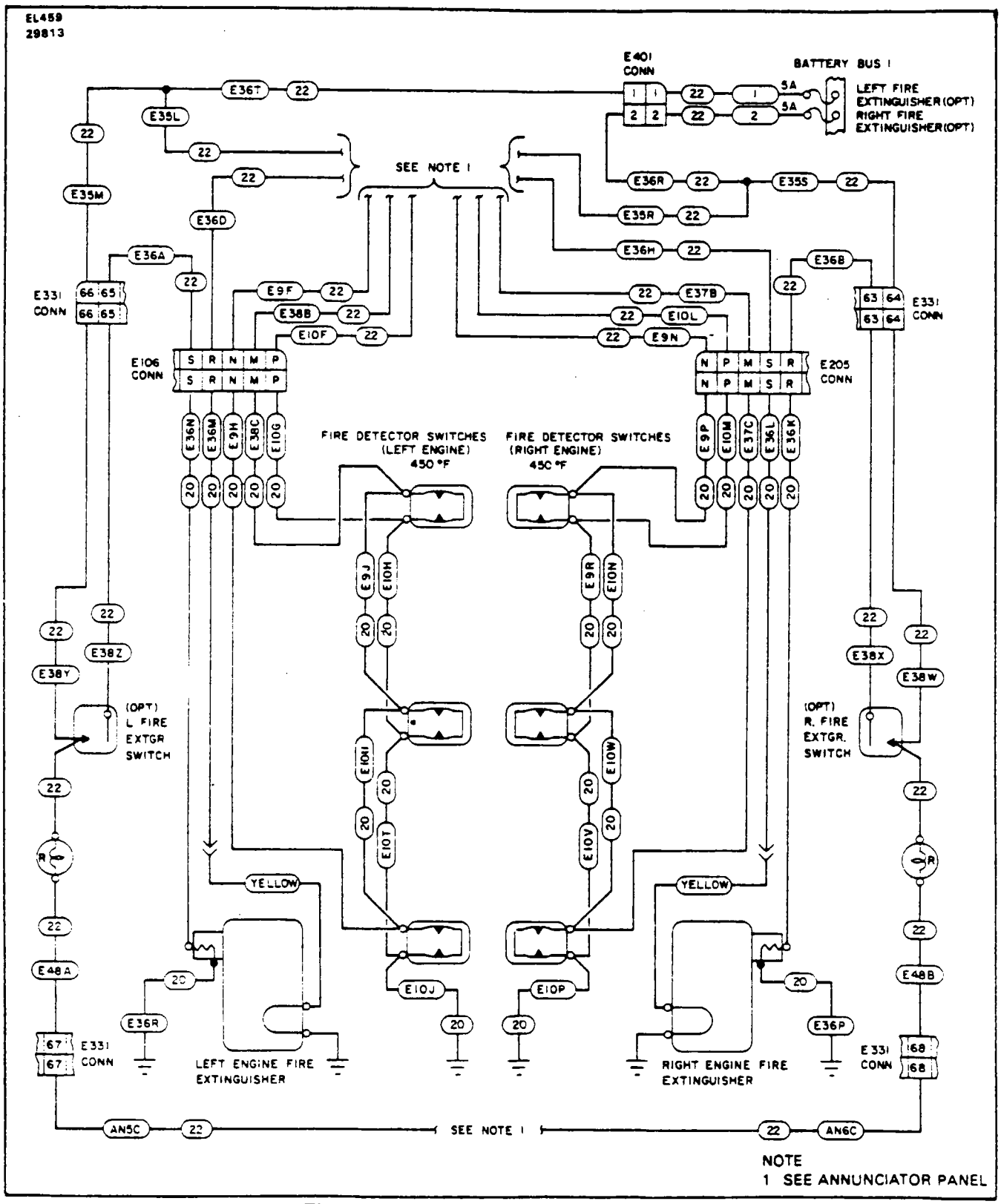

Figure 15A-13 Fire Extinguisher.
PA-31T2 S/N 31T-8166001 to 8166061

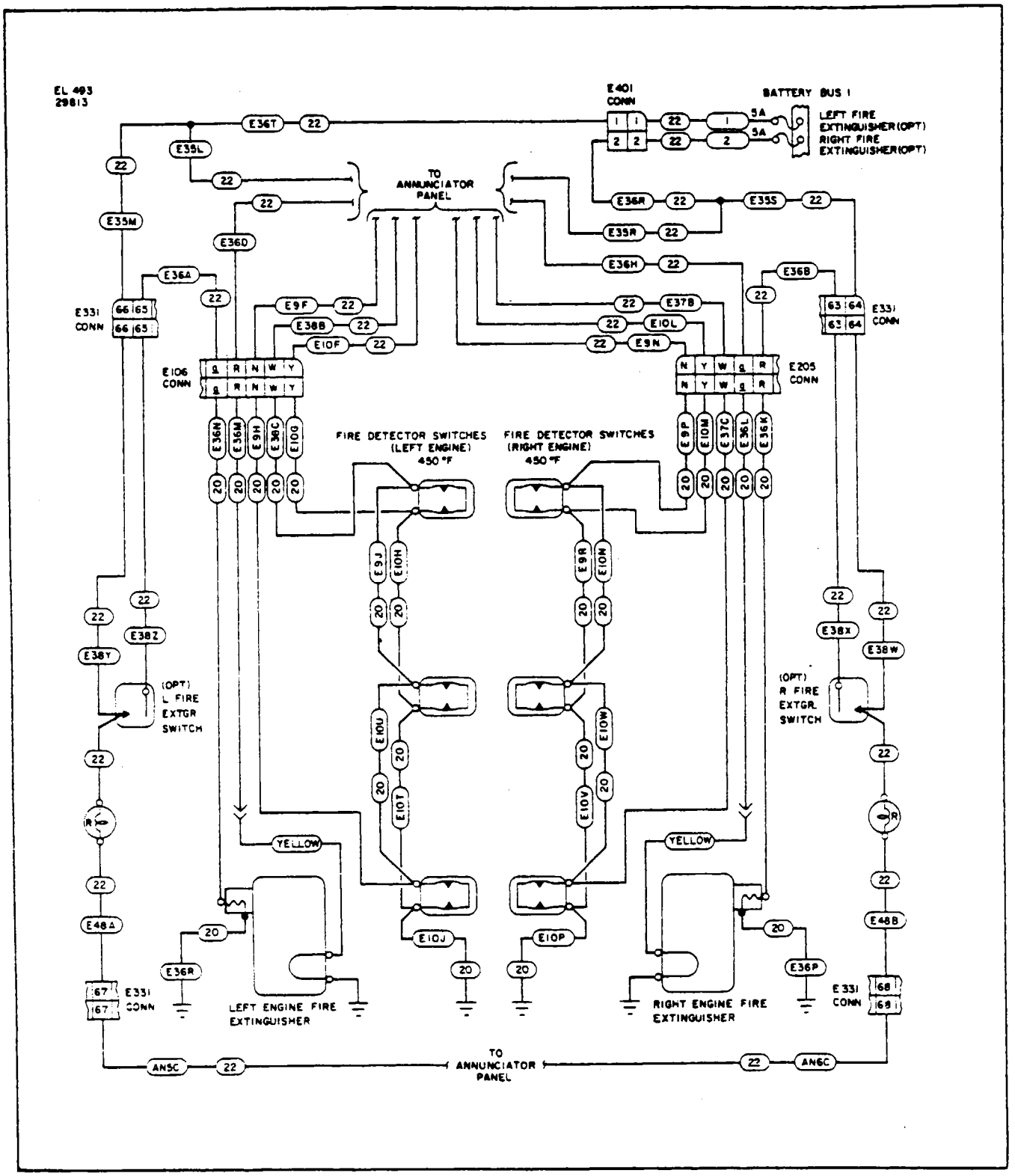

Figure 15A-14. Fire Extinguisher.
PA-31T2 S/N 31T-8166062 to 31T-8166076

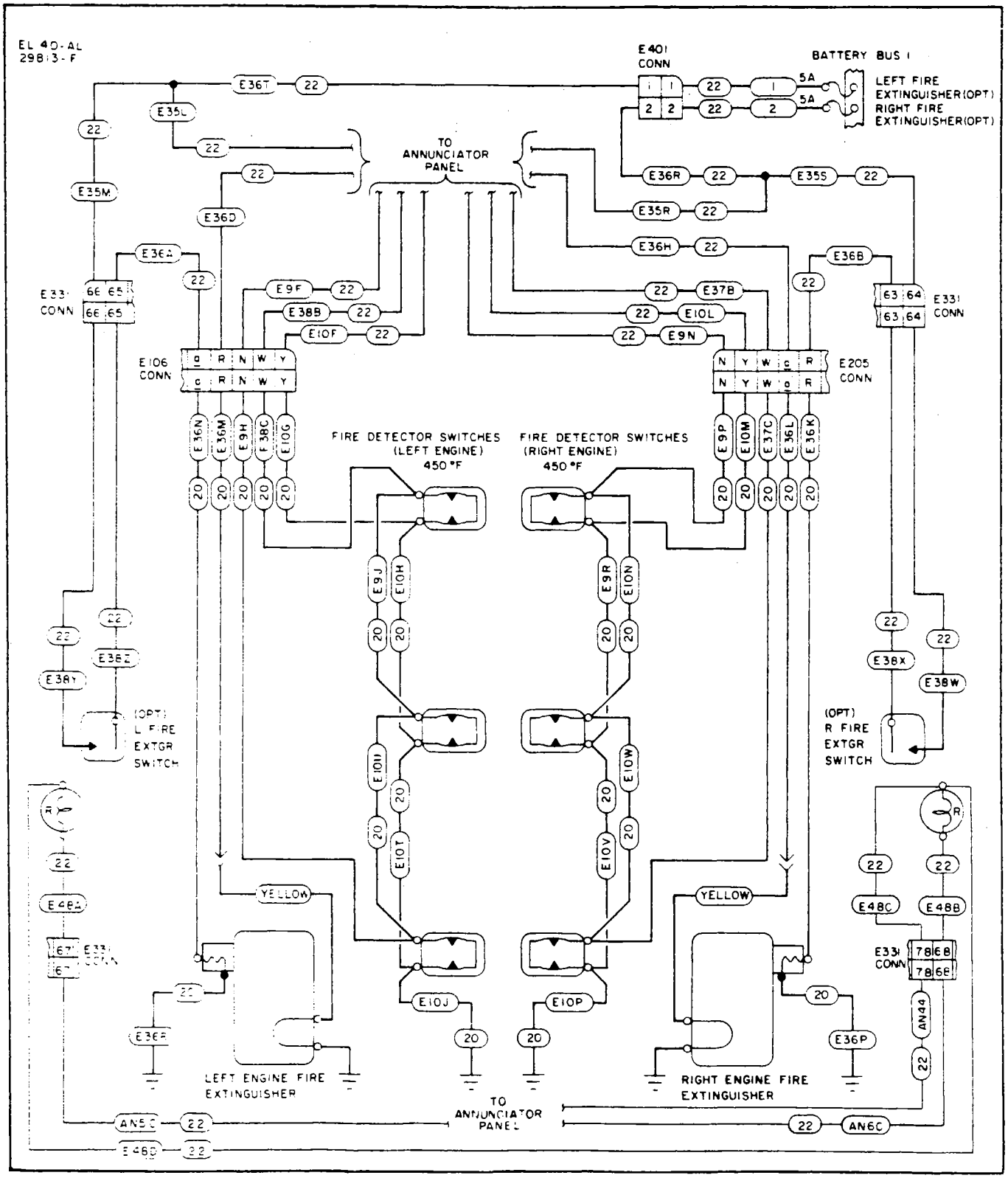

Figure 15A-14a Fire Extinguisher PA-31T2 S/N 31T-1166001 and up

8B7A

THIS PAGE INTENTIONALLY BLANK

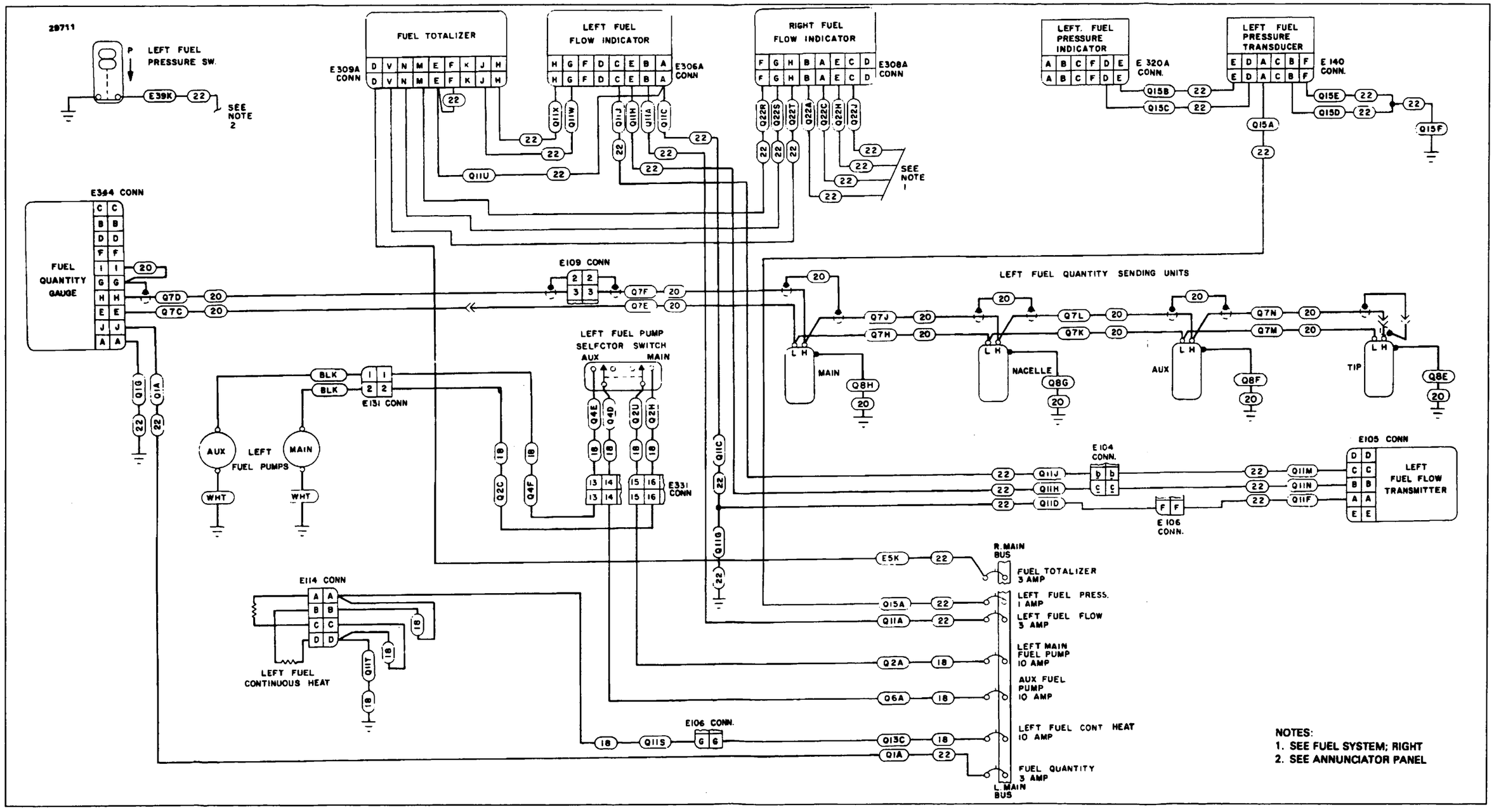

Figure 15A-15. Fuel System - Left

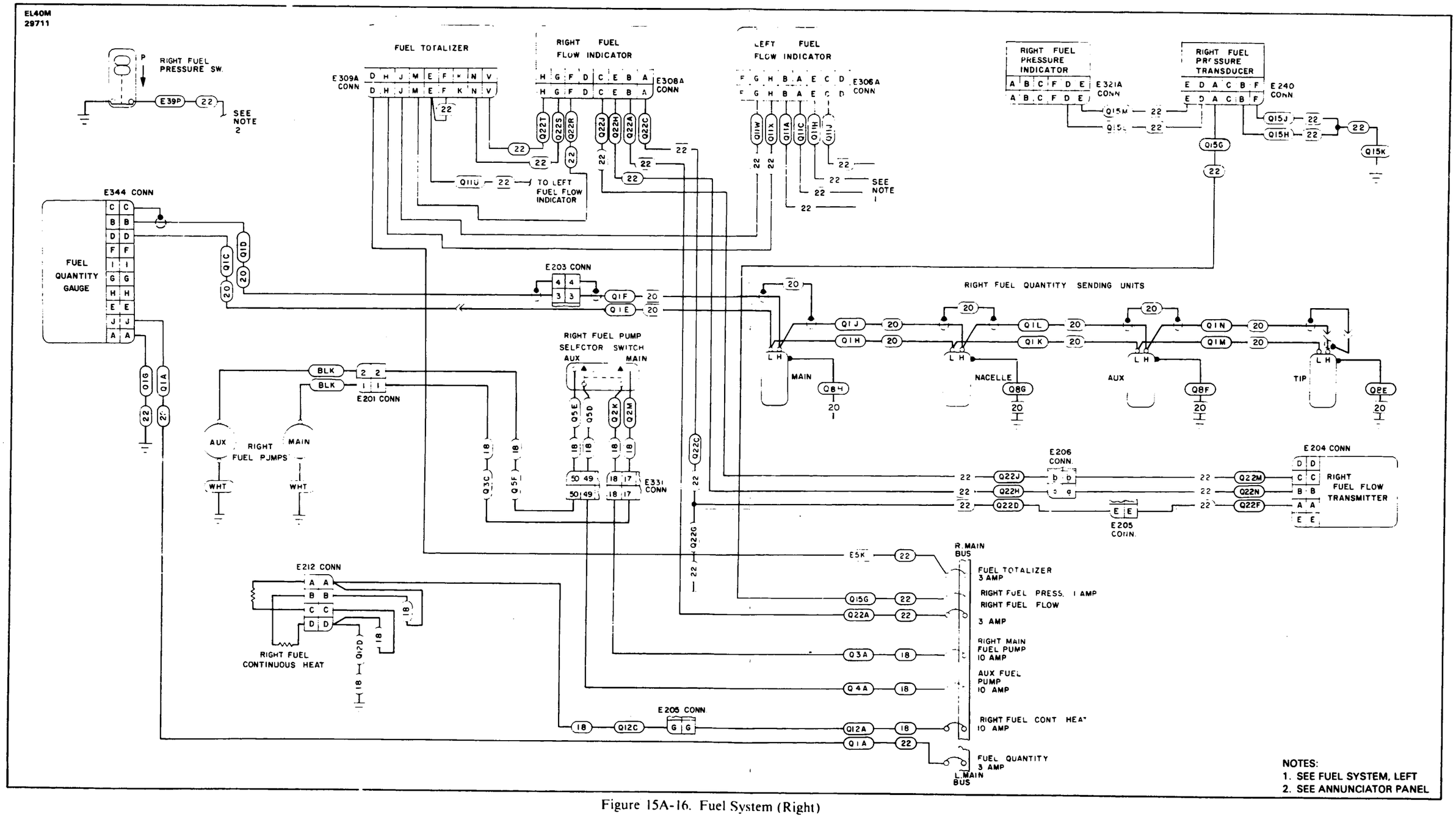

Figure 15A-16. Fuel System (Right)

8B11A

THIS PAGE INTENTIONALLY BLANK

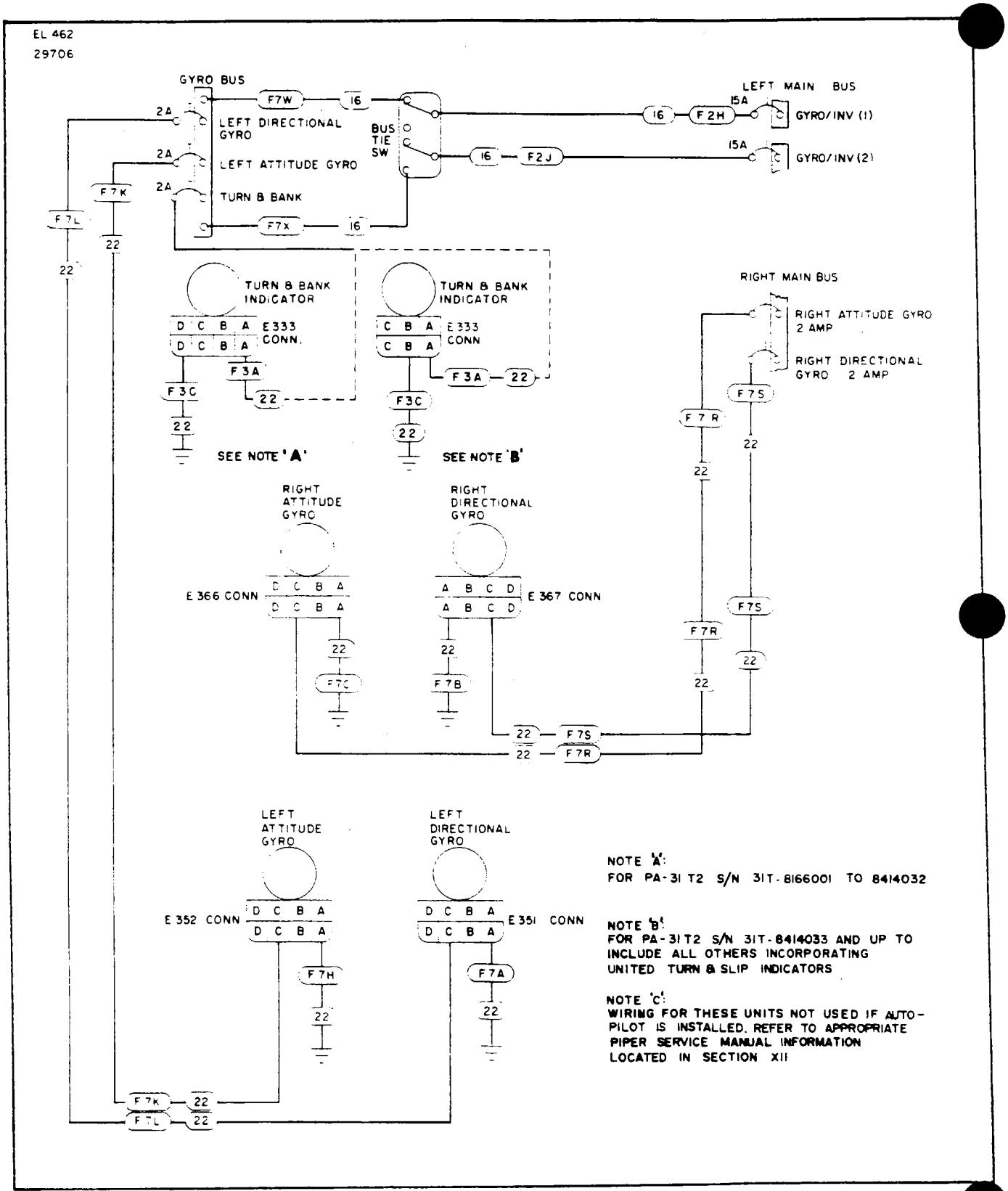

Figure 15A-17. Attitude Gyro, Directional Gyro and Turn and Bank (Right and Left)

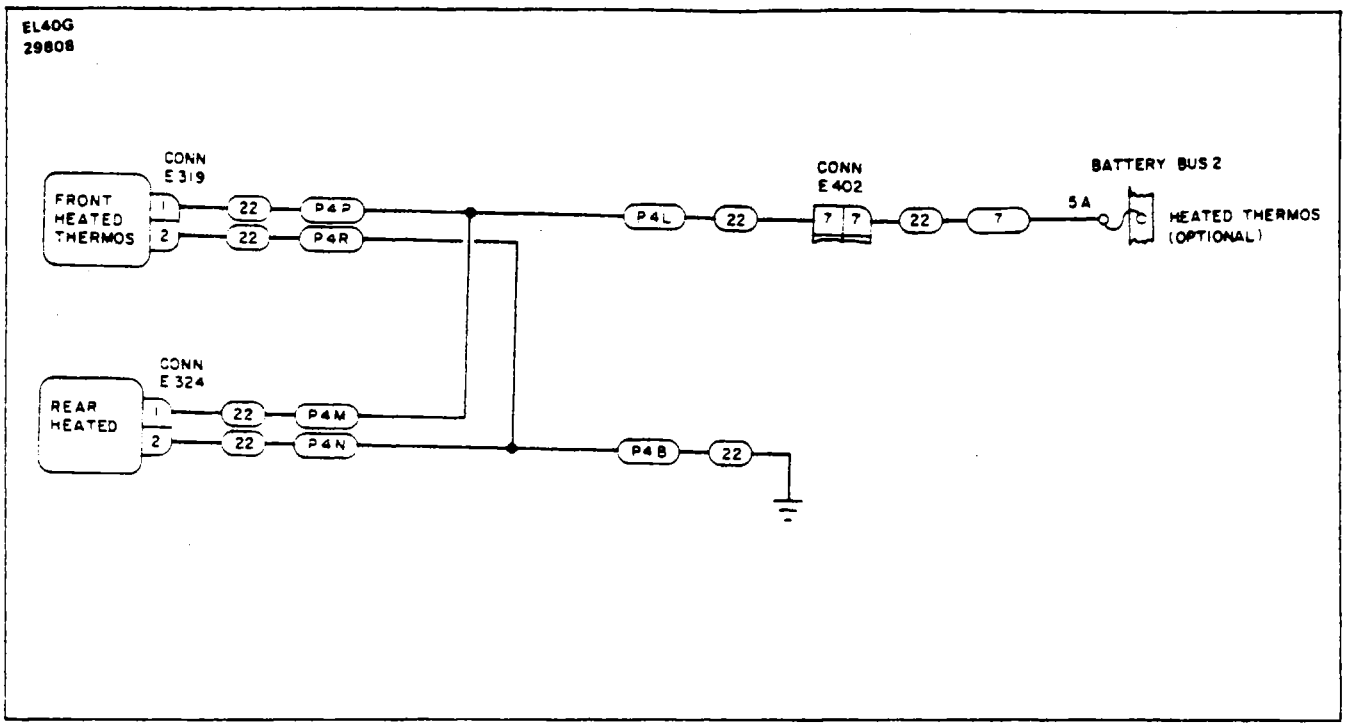

Figure 15A-18 Heated Thermos (Opt)

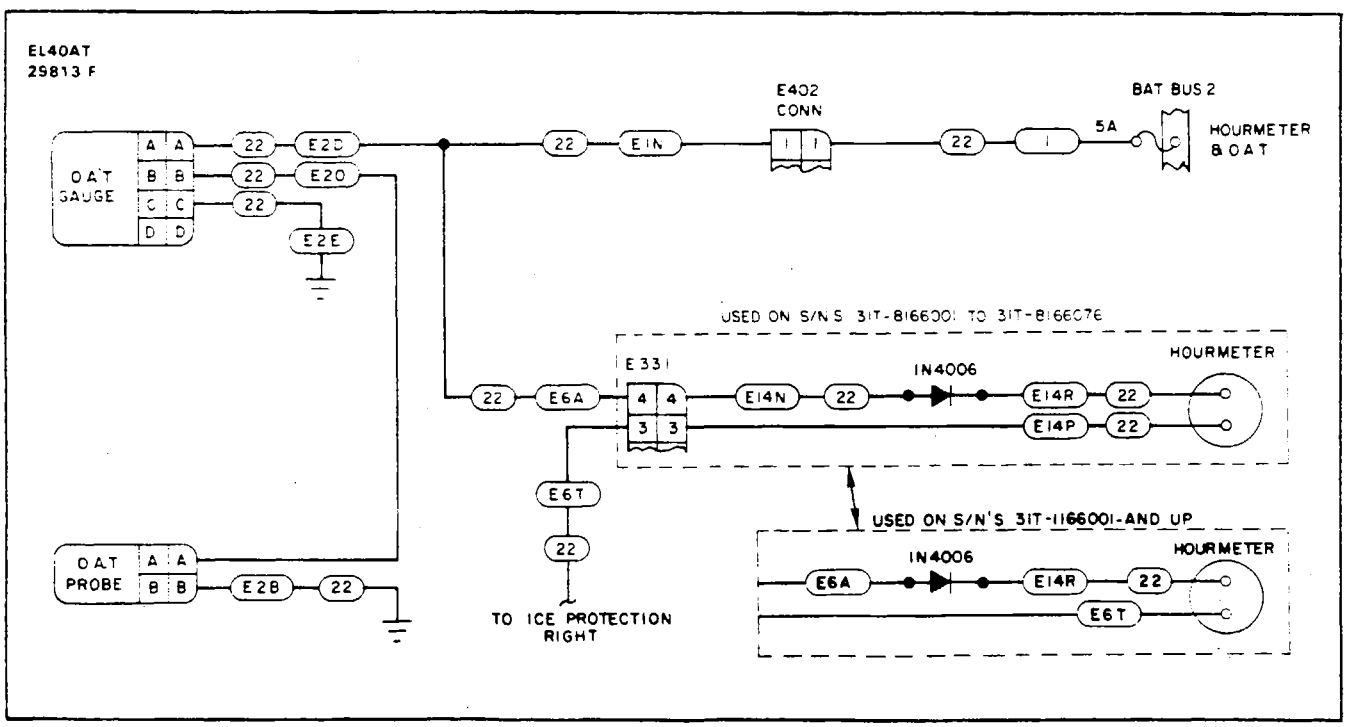

Figure 15A-19 Hour Meter and O A.T

8B13A

THIS PAGE INTENTIONALLY BLANK

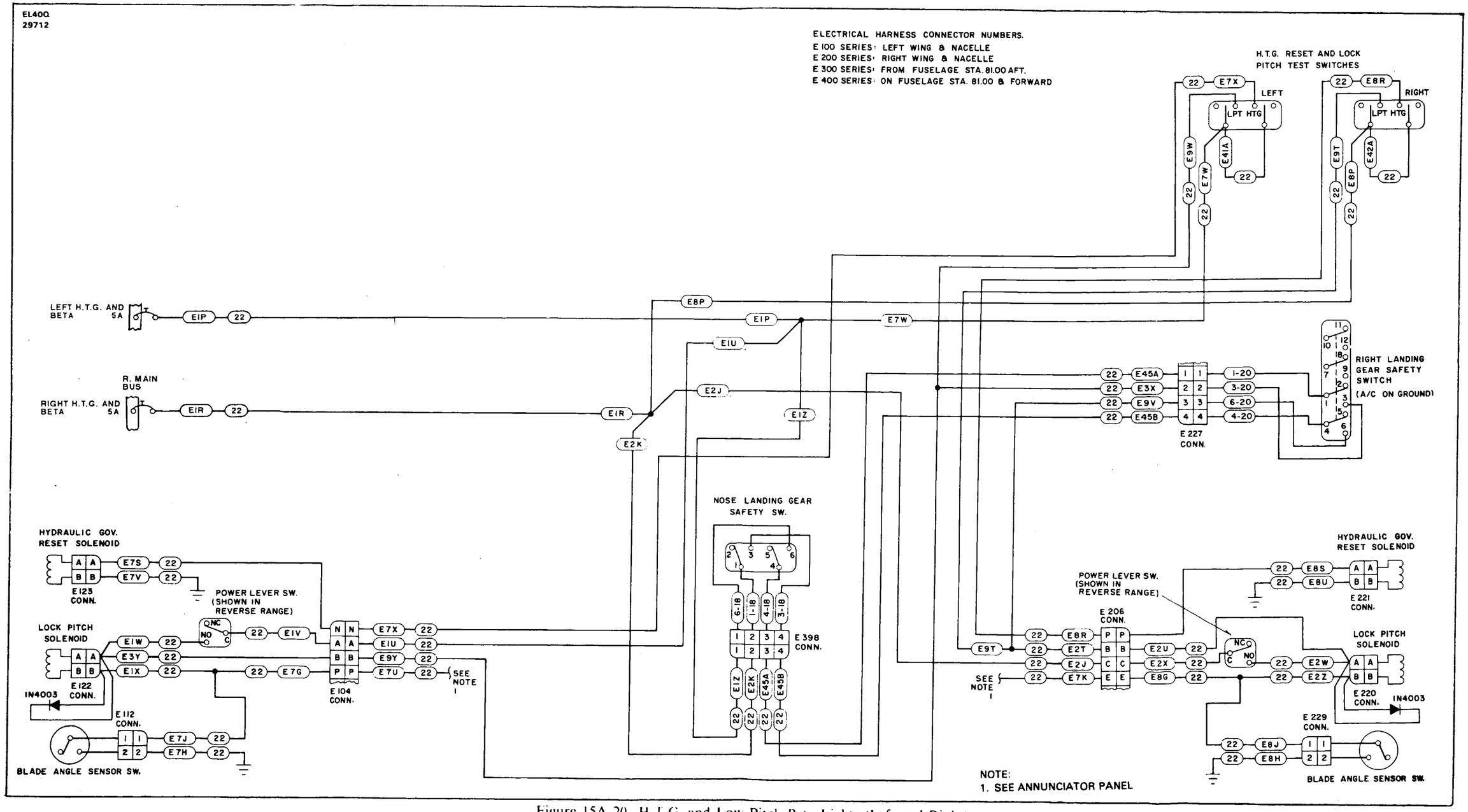

Figure 15A-20. H.T.G. and Low Pitch Beta Lights (Left and Right)

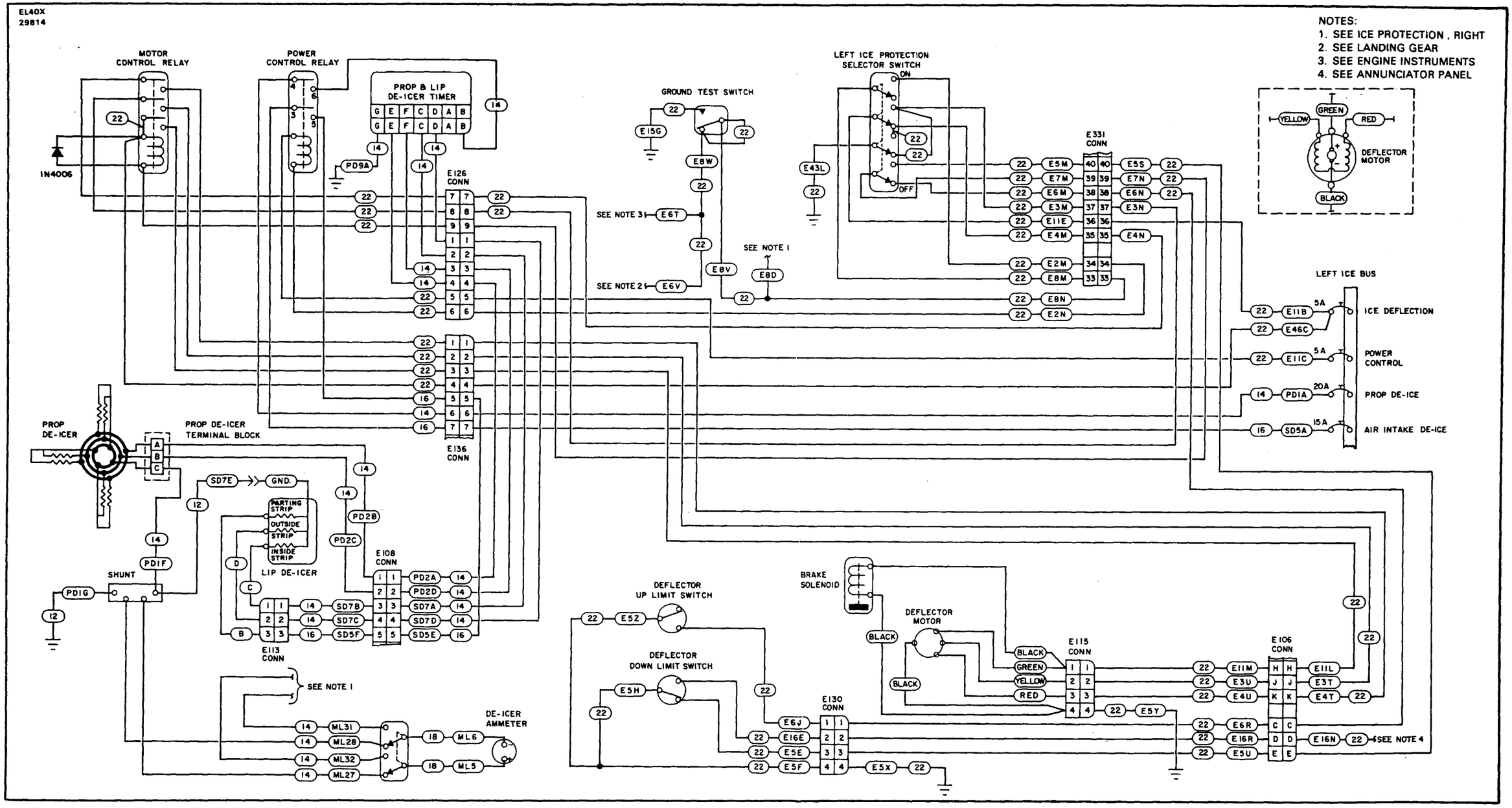

Figure 15A-21. Ice Protection (Left)

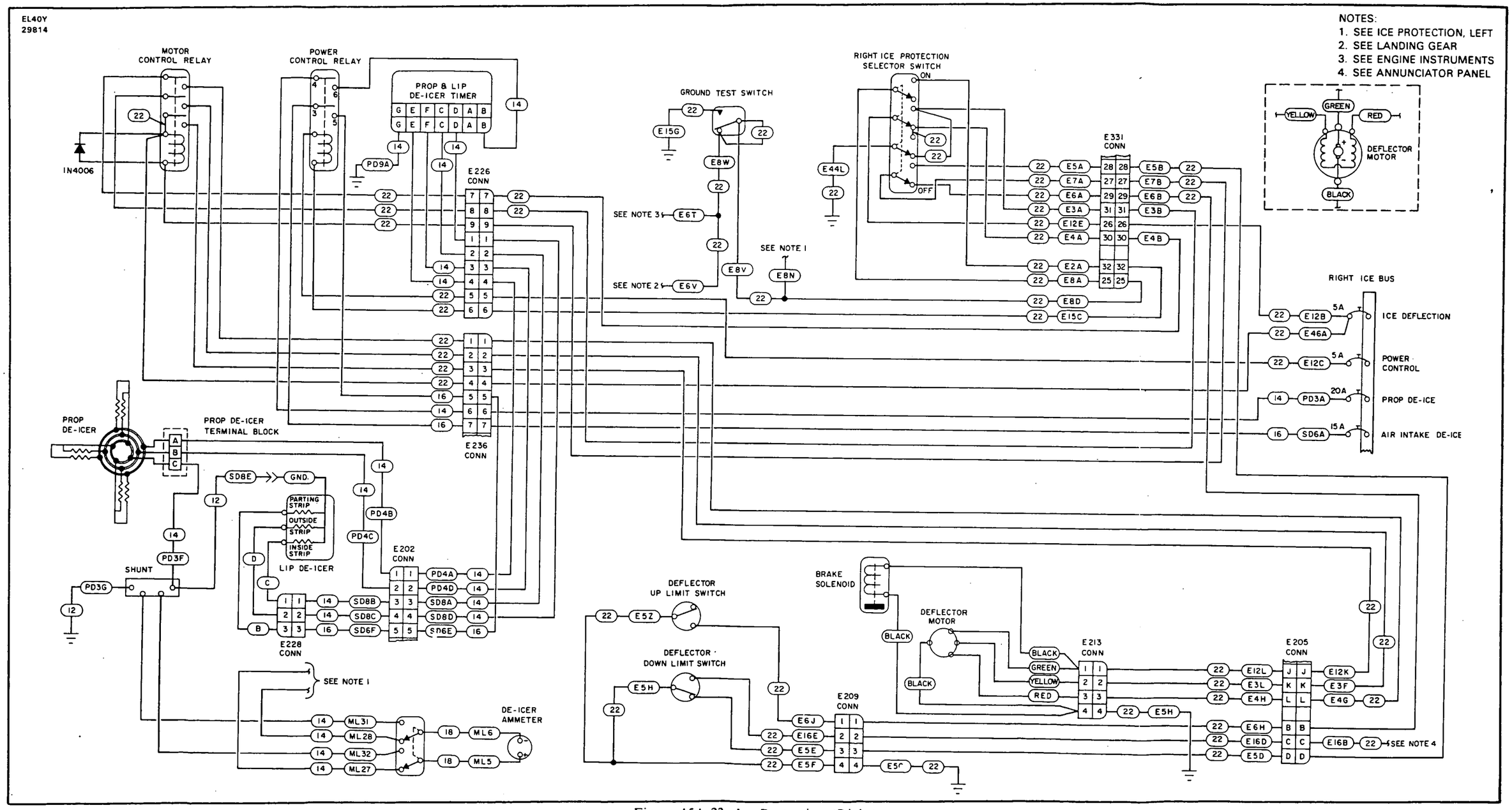

Figure 15A-22. Ice Protection (Right)

8B19A

THIS PAGE INTENTIONALLY BLANK

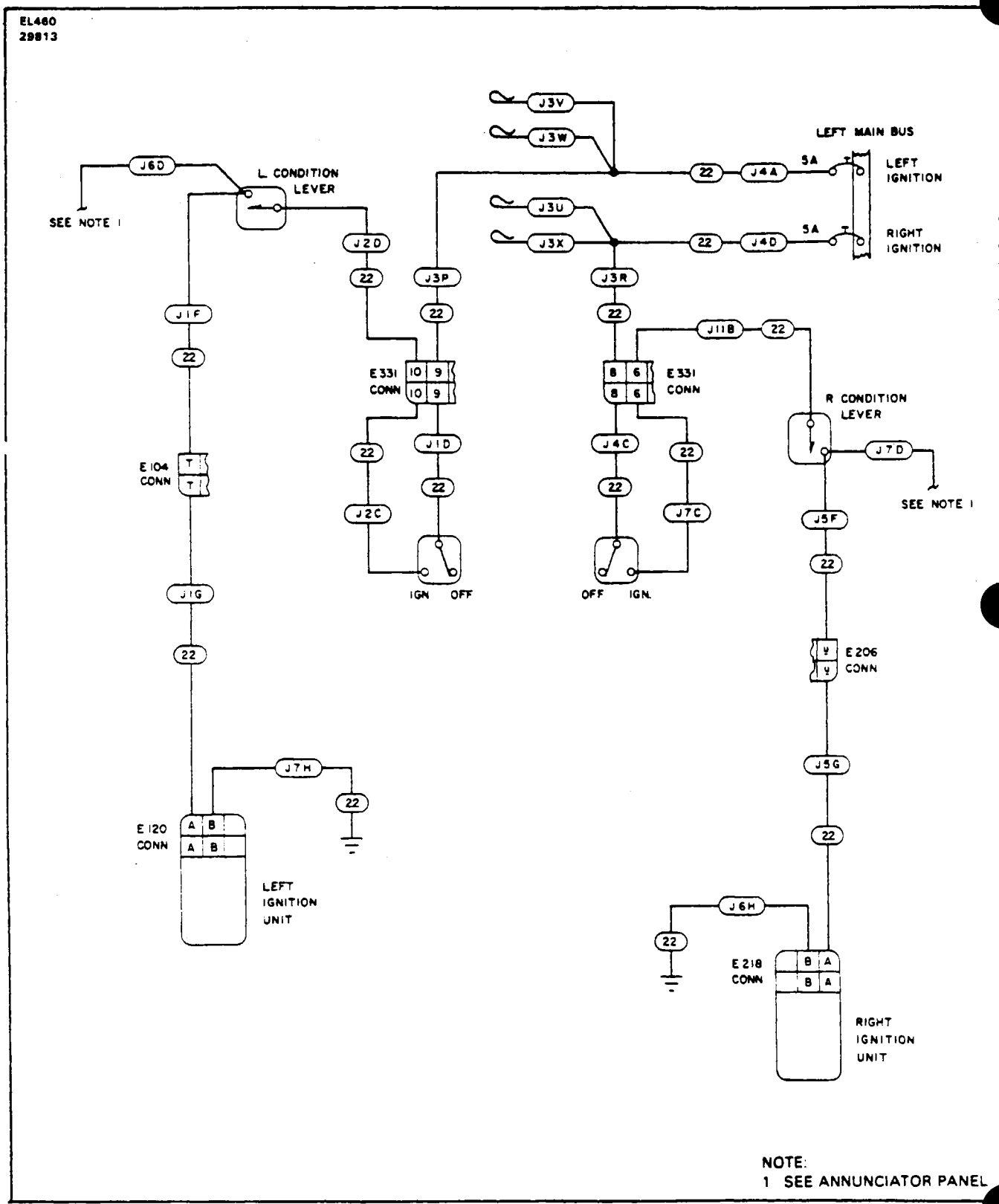

Figure 15A-23 Ignition (Left and Right)

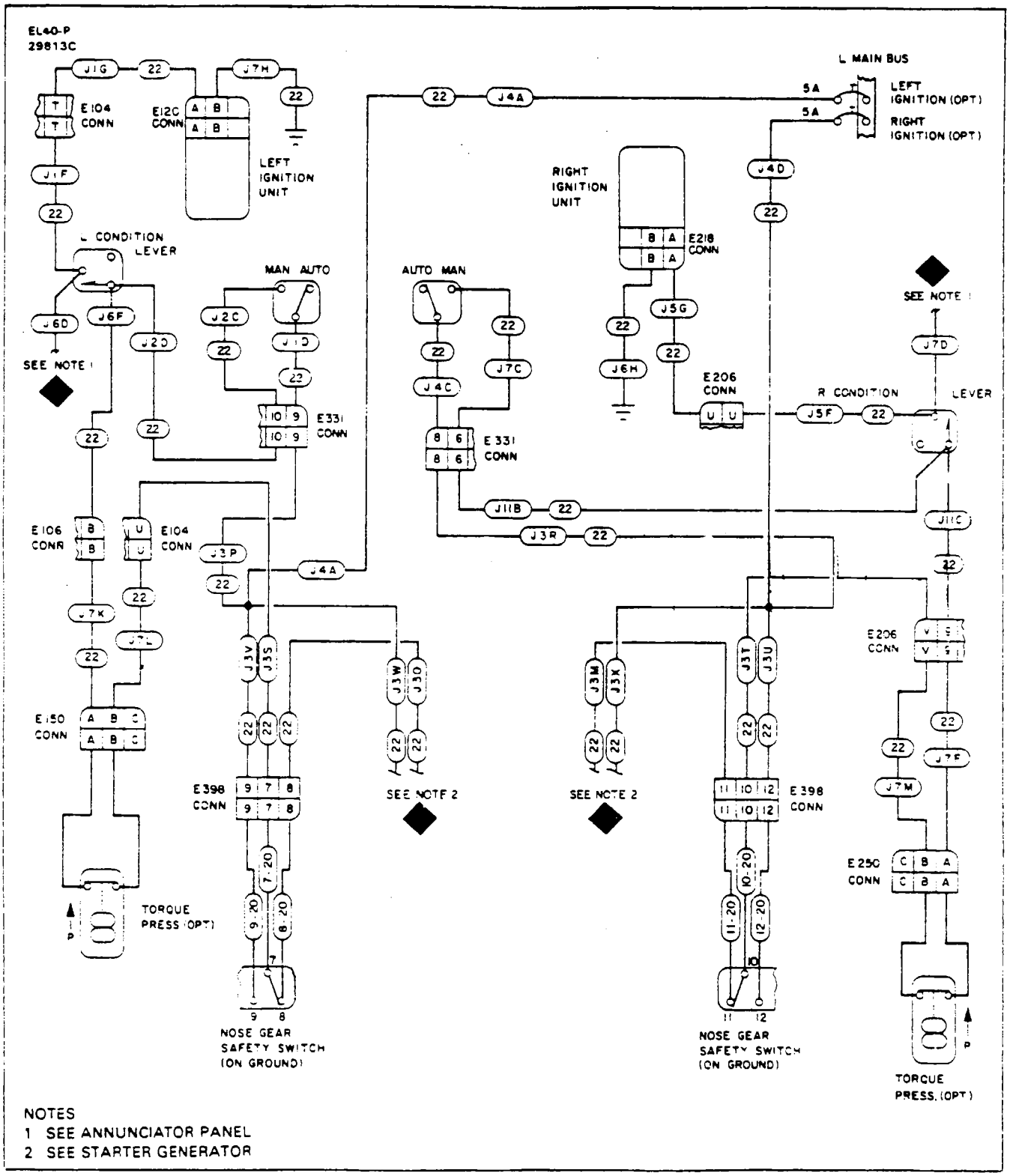

Figure 15A-24 Ignition, Auto - Left and Right (Opt)
PA-31T S/N 31T-8166001 to 31T-8166076

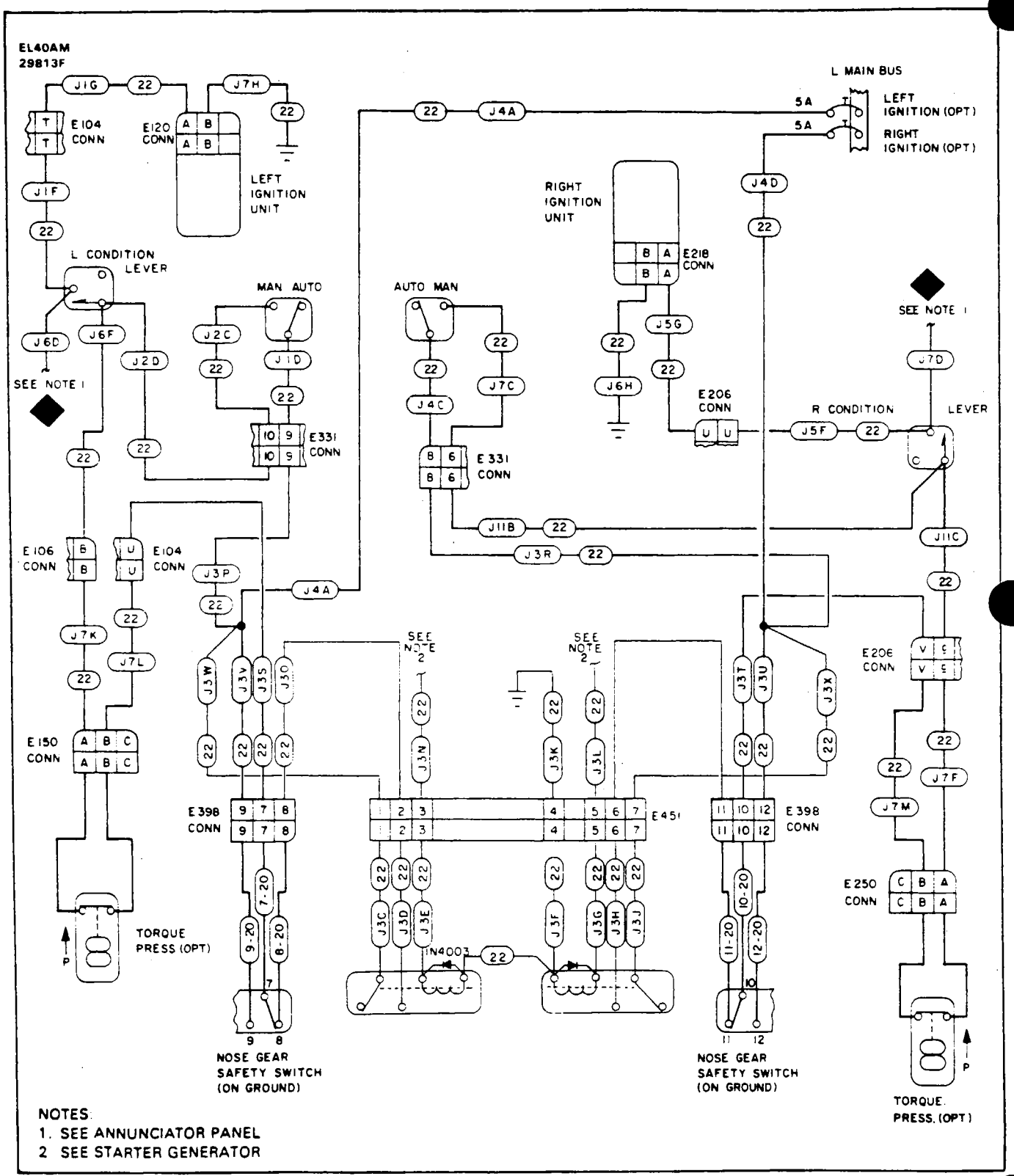

Figure 15-24a. Ignition Auto - Left and Right (Opt)
PA-31T2 S/N 31T-1166001 and up

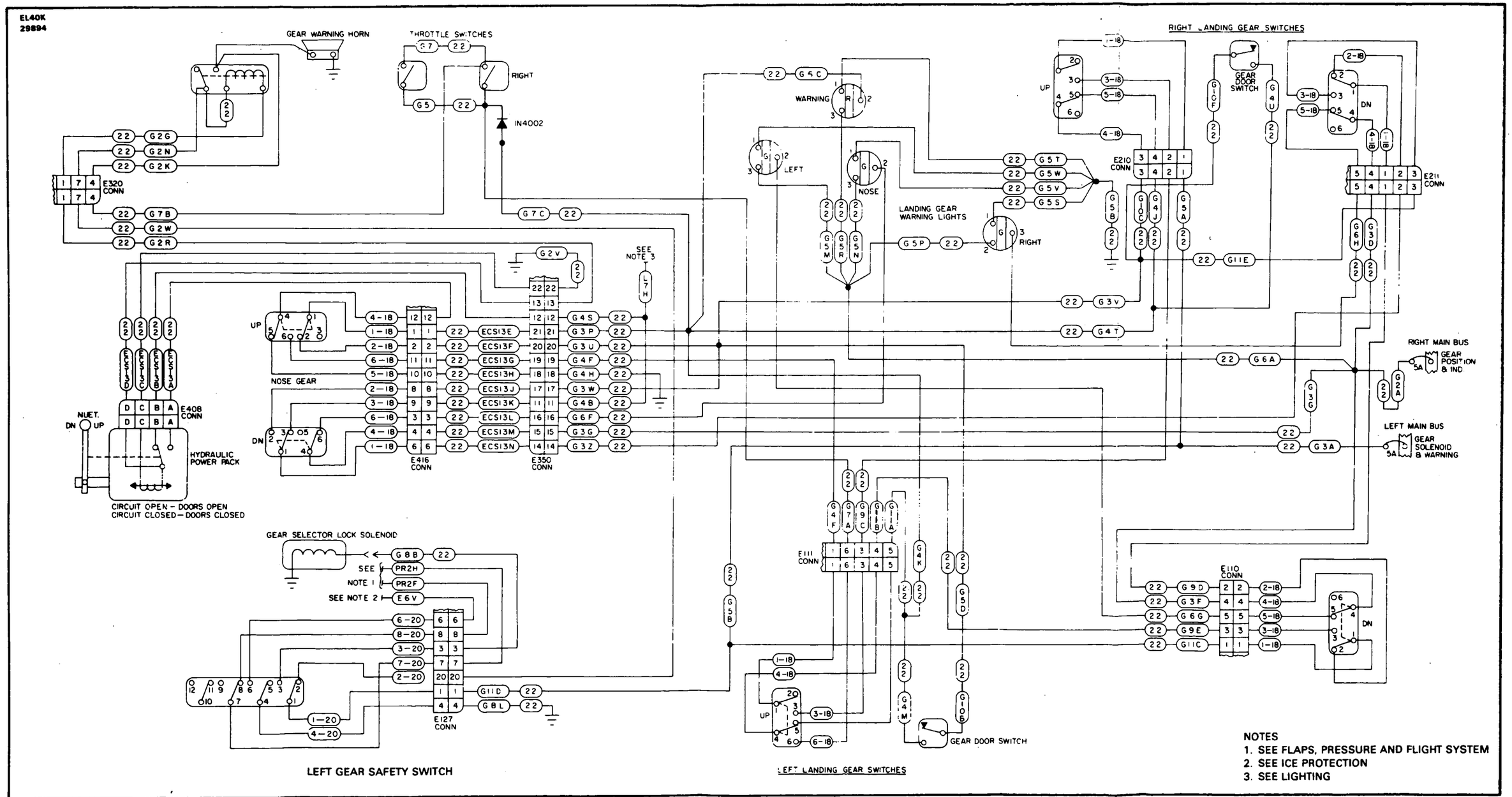

Figure 15A-25. Landing Gear Control and Warning PA-31T2 S/N 31T-8166001 to 31T-8166076

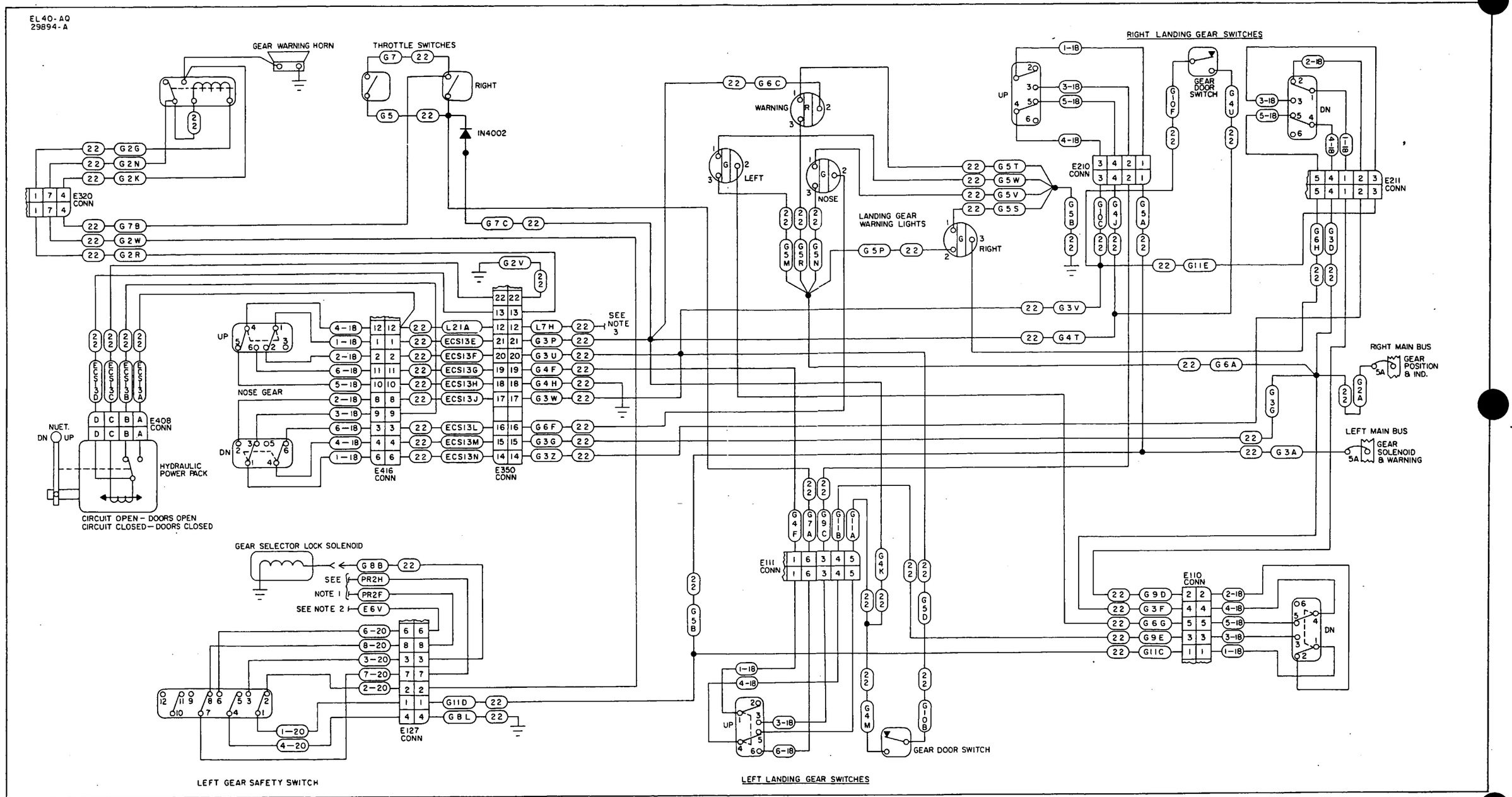

Figure 15A-25a. Landing Gear Control and Warning PA-31T2 S/N 31T-1166001 and up

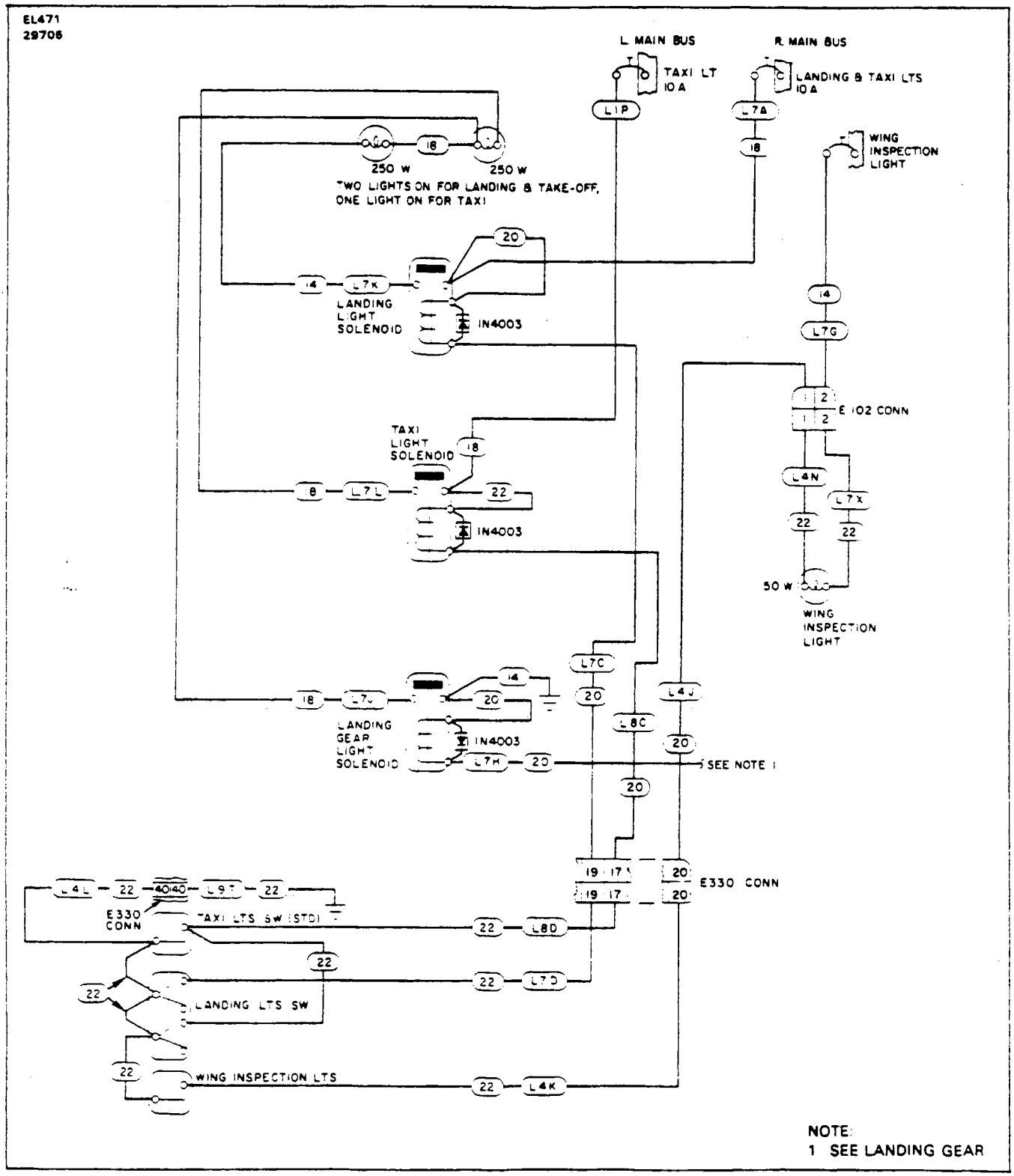

Figure 15A-26 Landing, Taxi and Wing Inspection Lights (Early Models)

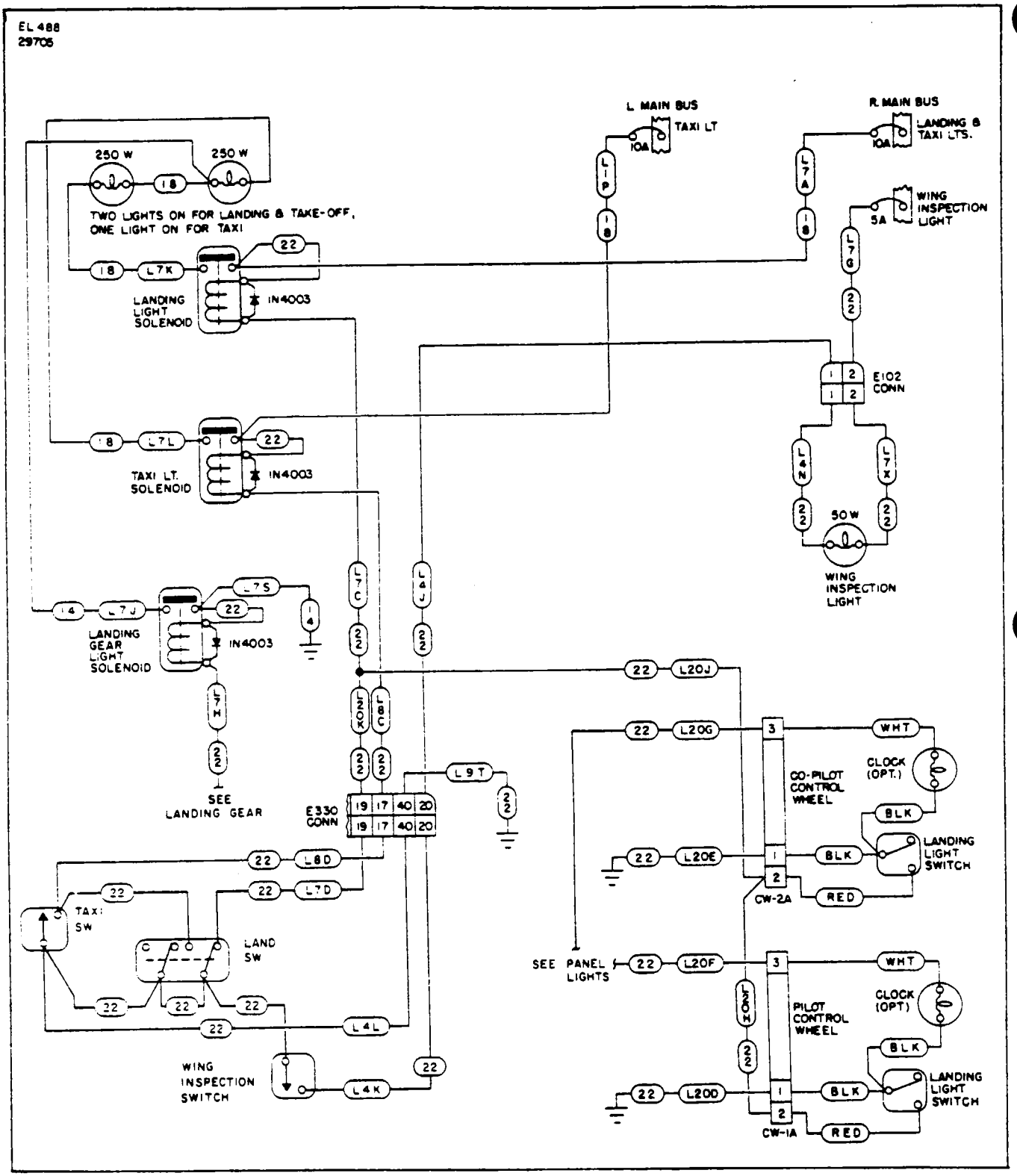

Figure 15A-27 Landing, Taxi and Wing Inspection Lights (Later Models)

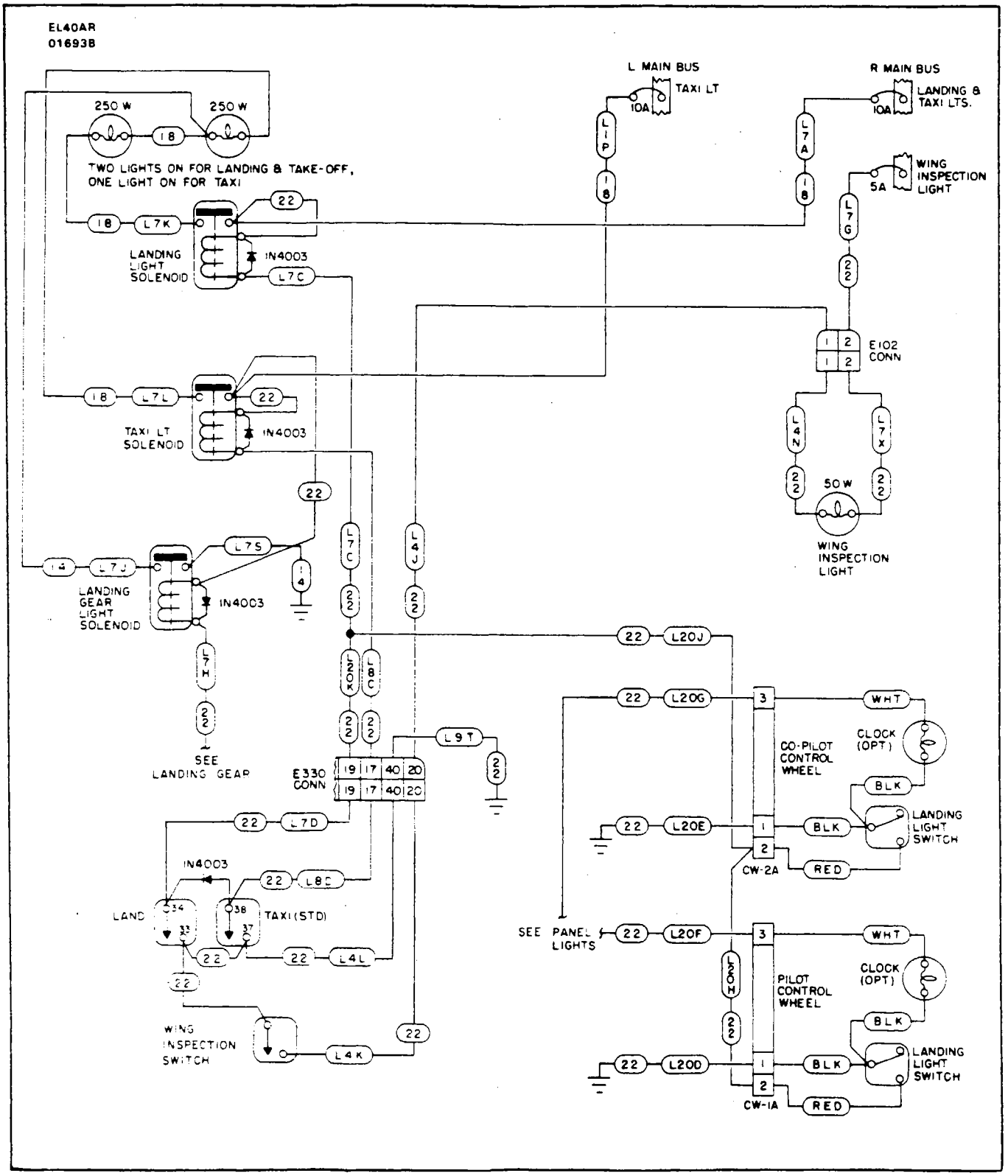

Figure 15A-27a Landing Taxi, and Wing Inspection Lights
PA-31T2 S/N 31T-1166001 and up

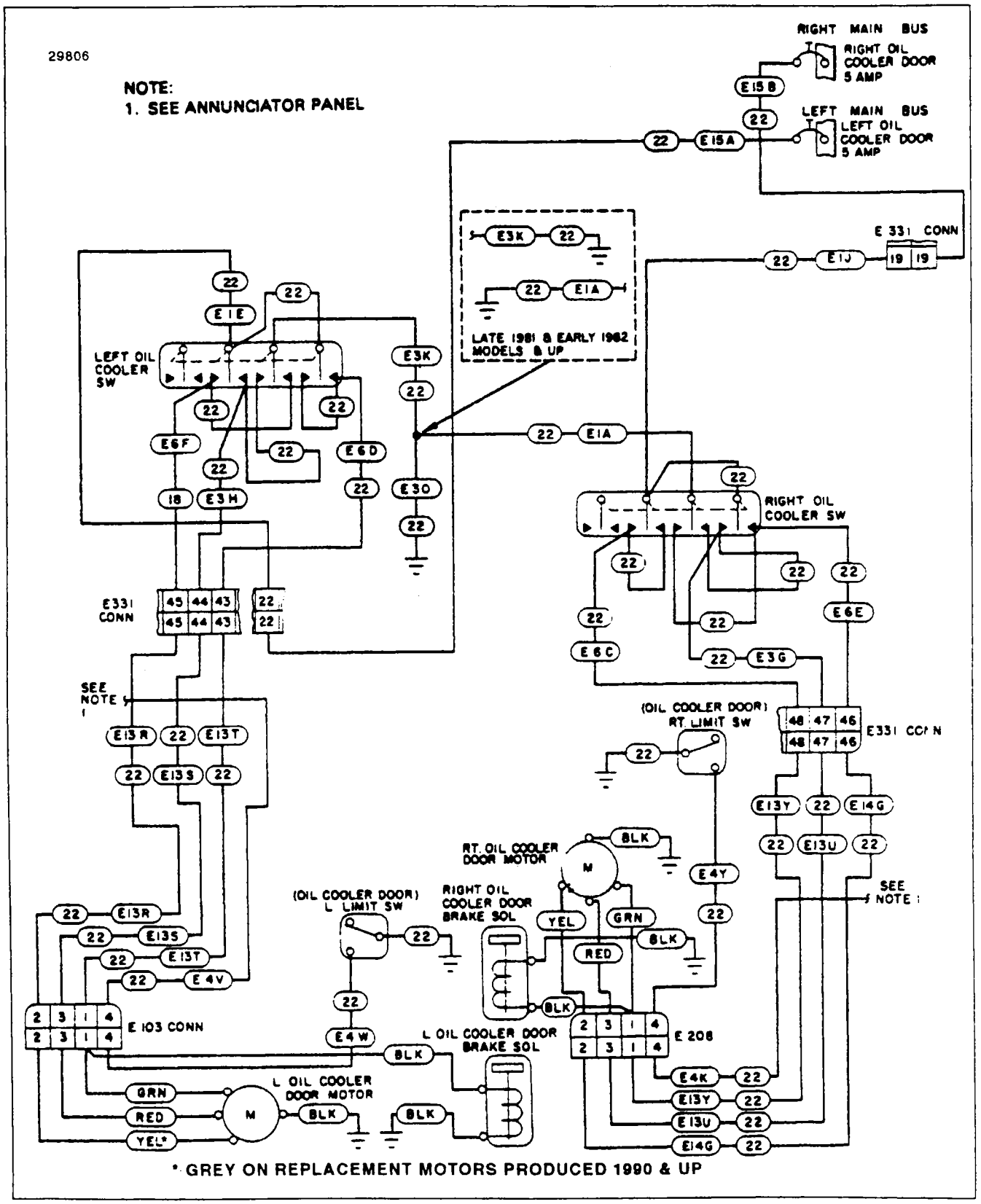

Figure 15A-28. Oil Cooler Doors (Left and Right)

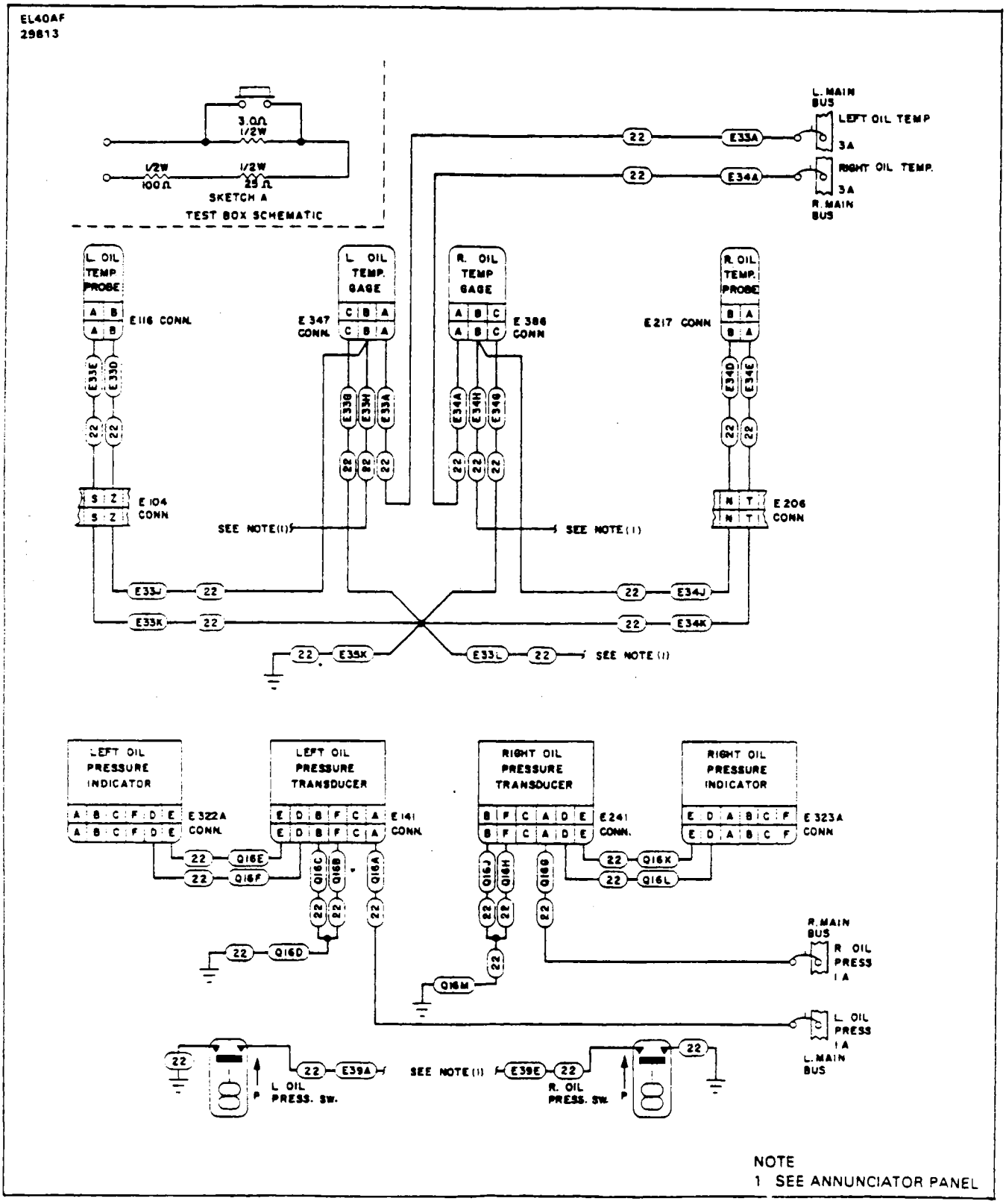

Figure 15A-29 Oil Temperature, Oil Pressure (Left and Right)

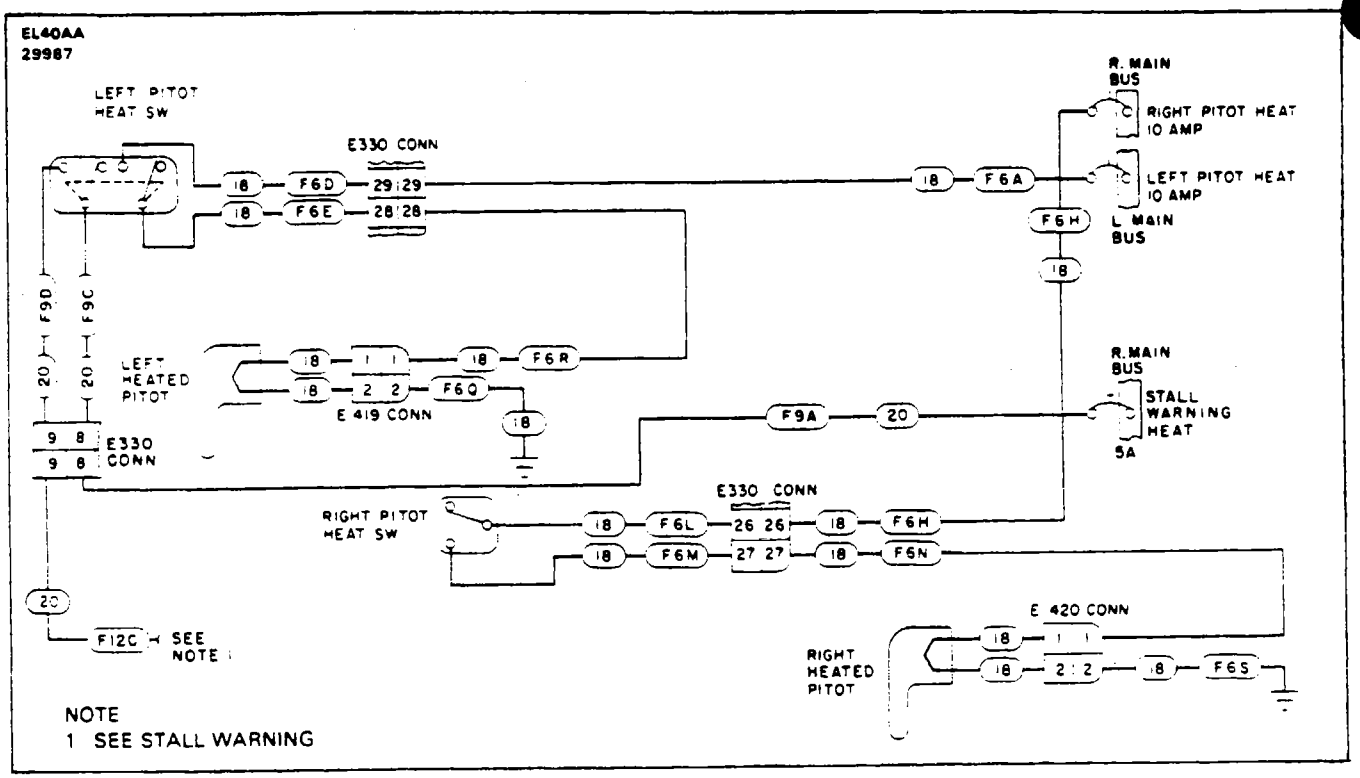

Figure 15A-30. Pitot Heat

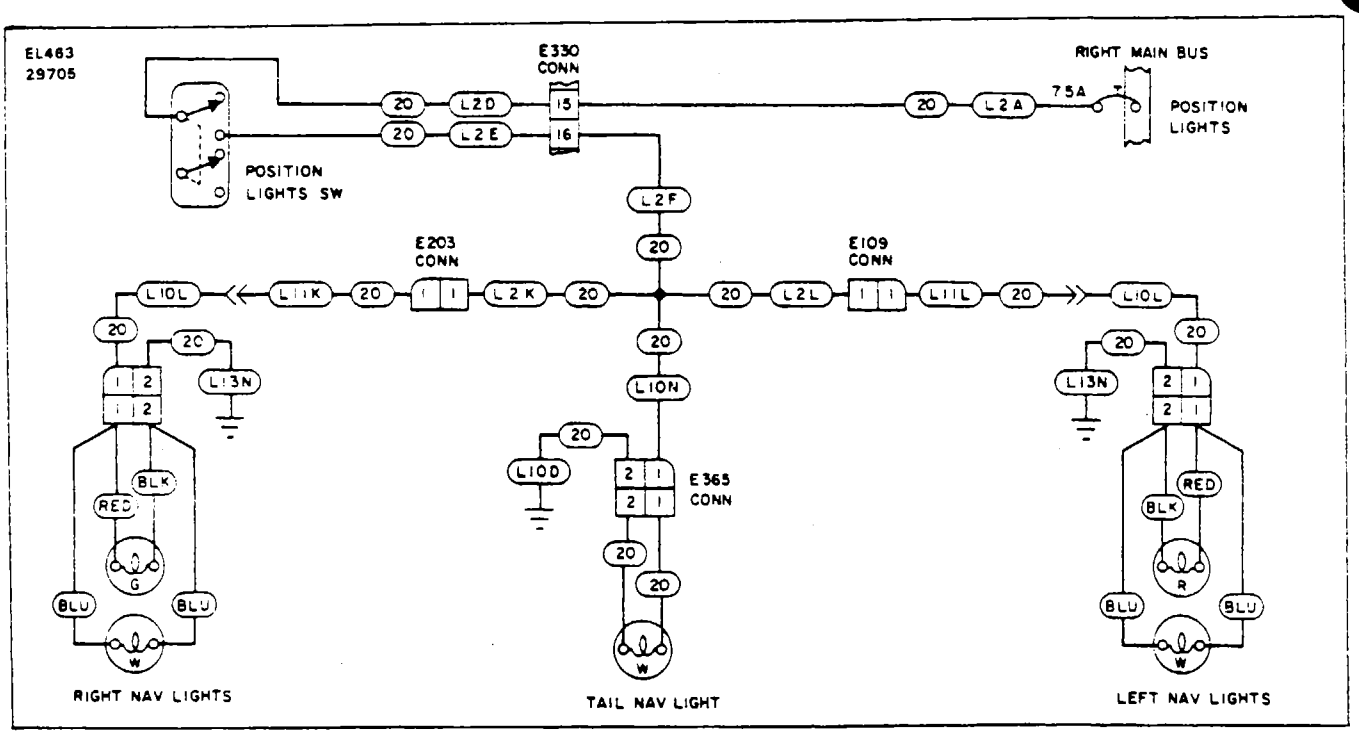

Figure 15A-31. Position Lights

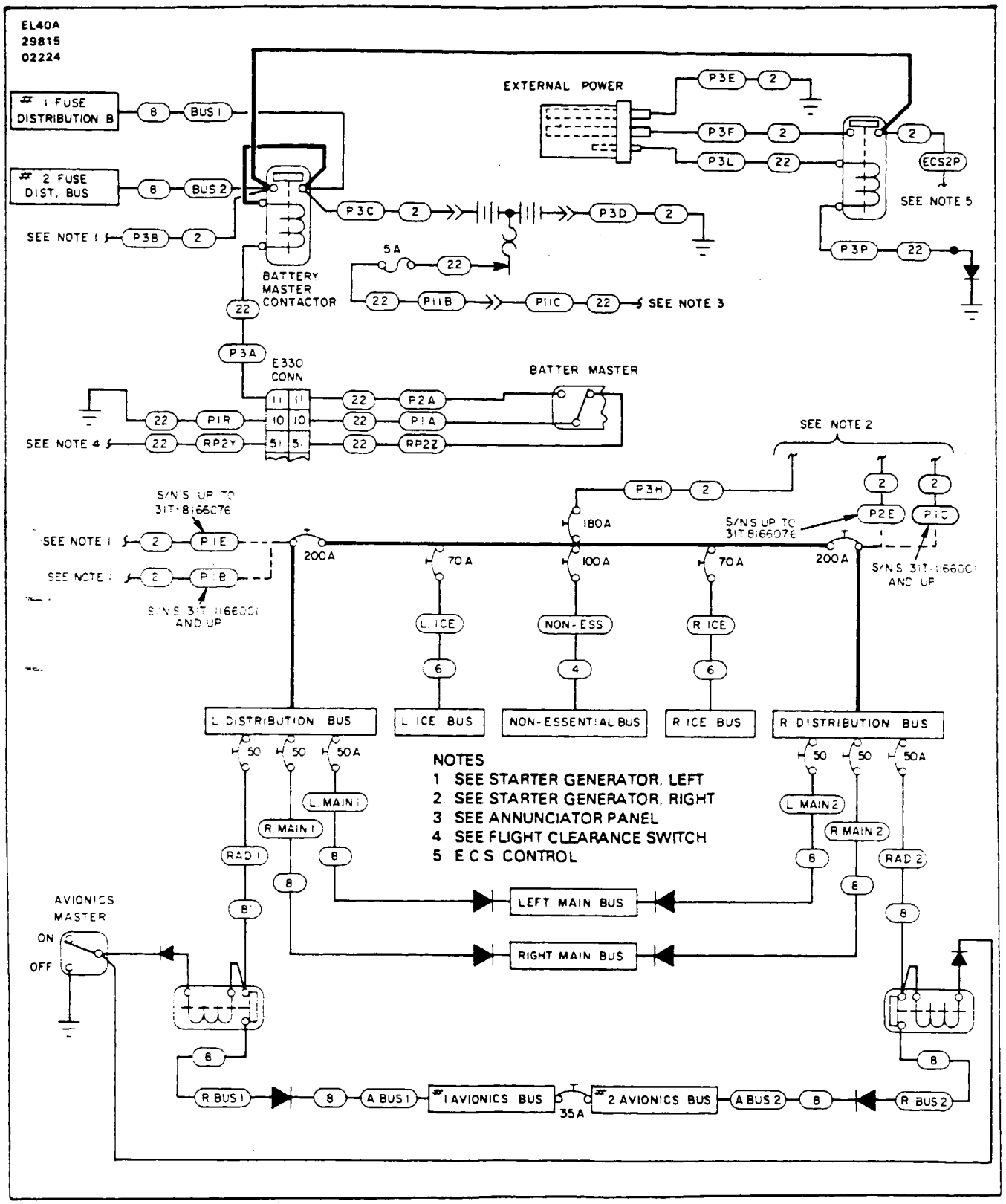

Figure 15A-32 Power Distribution and Bus

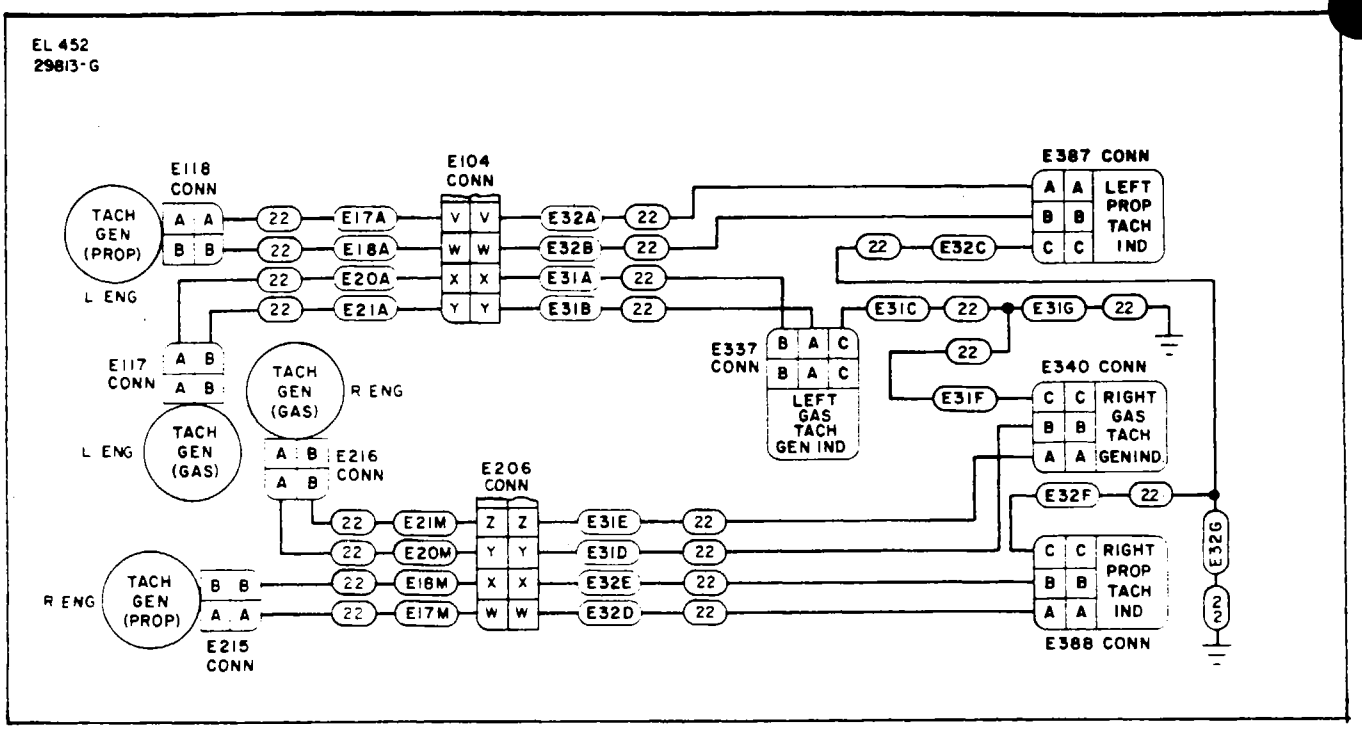

Figure 15A-33 Prop and Gas Generator Tach. (Left and Right)

INTENTIONALLY LEFT BLANK

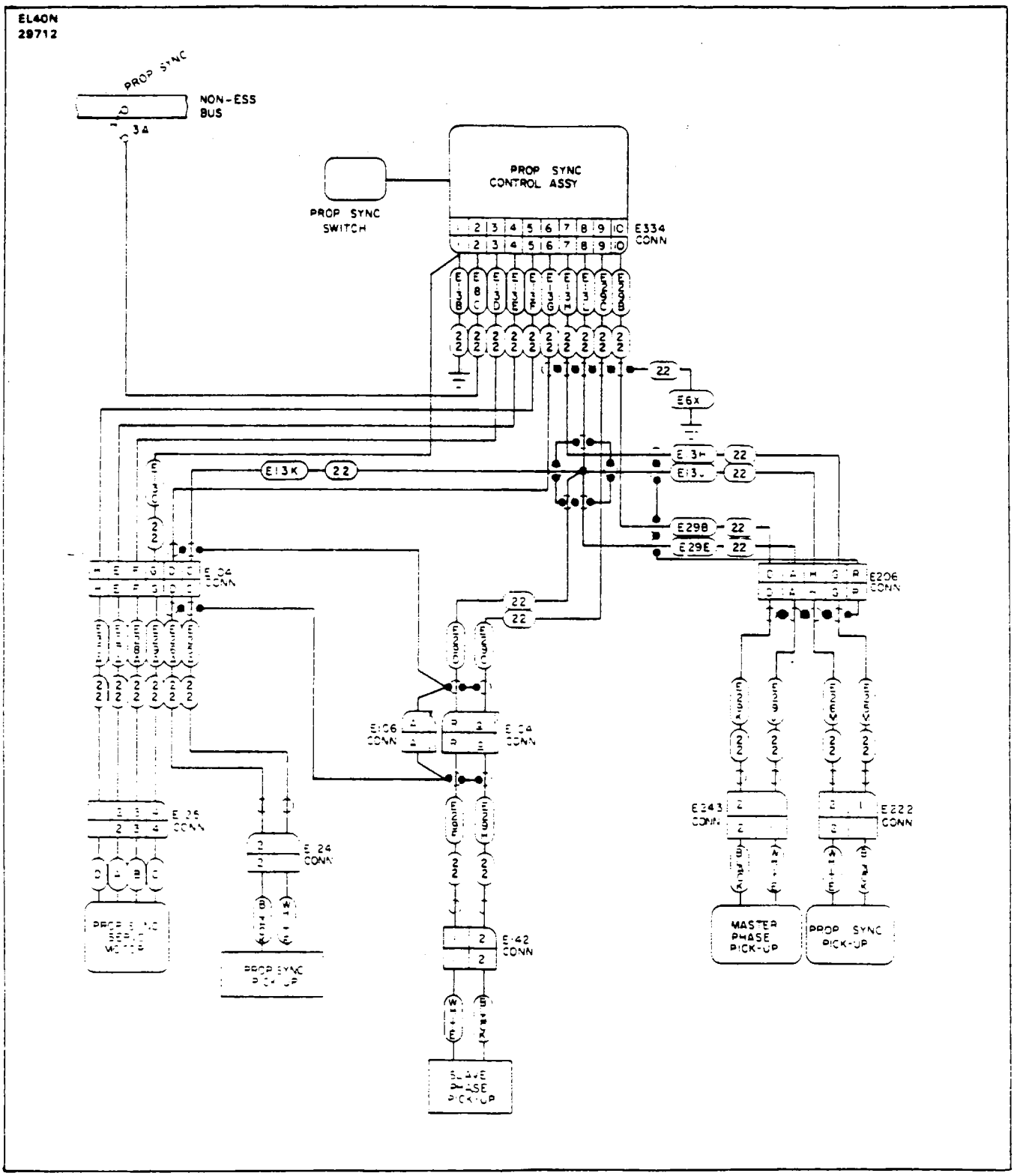

Figure 15A-34 Prop Sync Control System

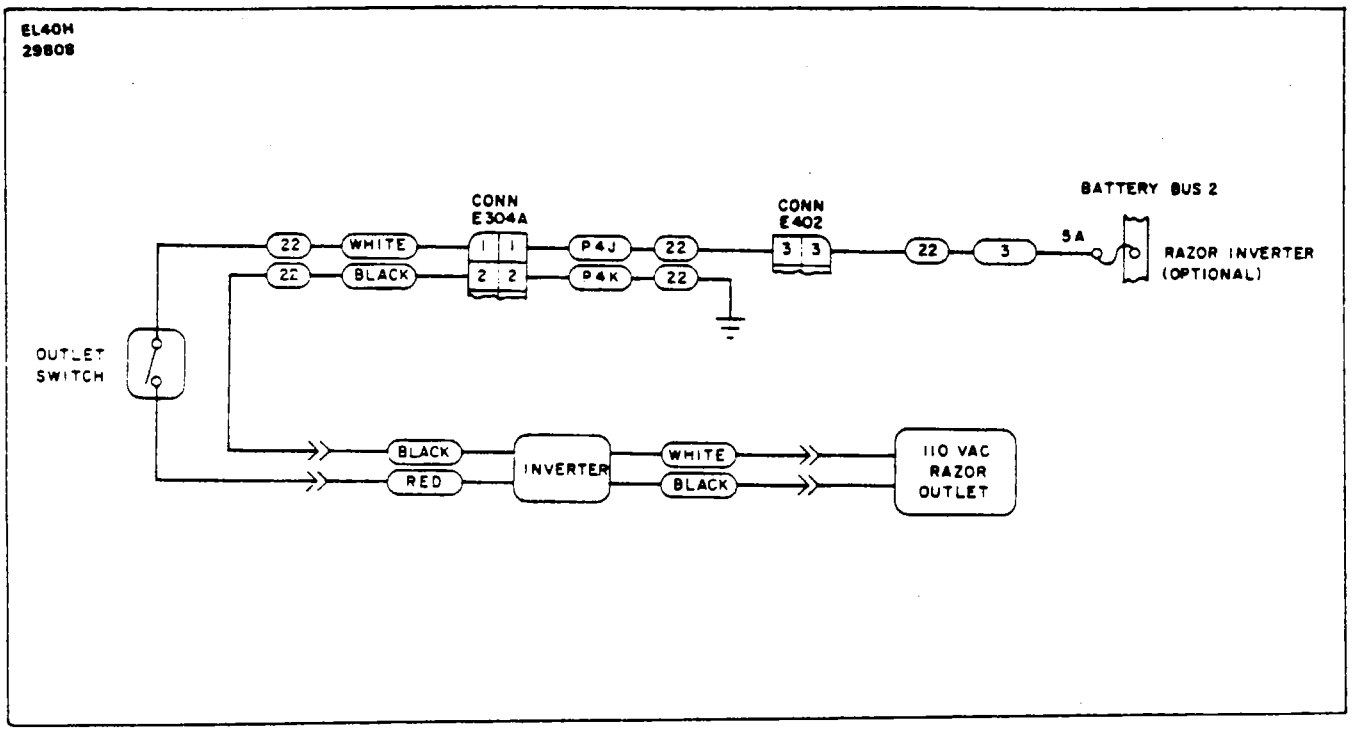

Figure 15A-35. Razor Inverters (Opt)

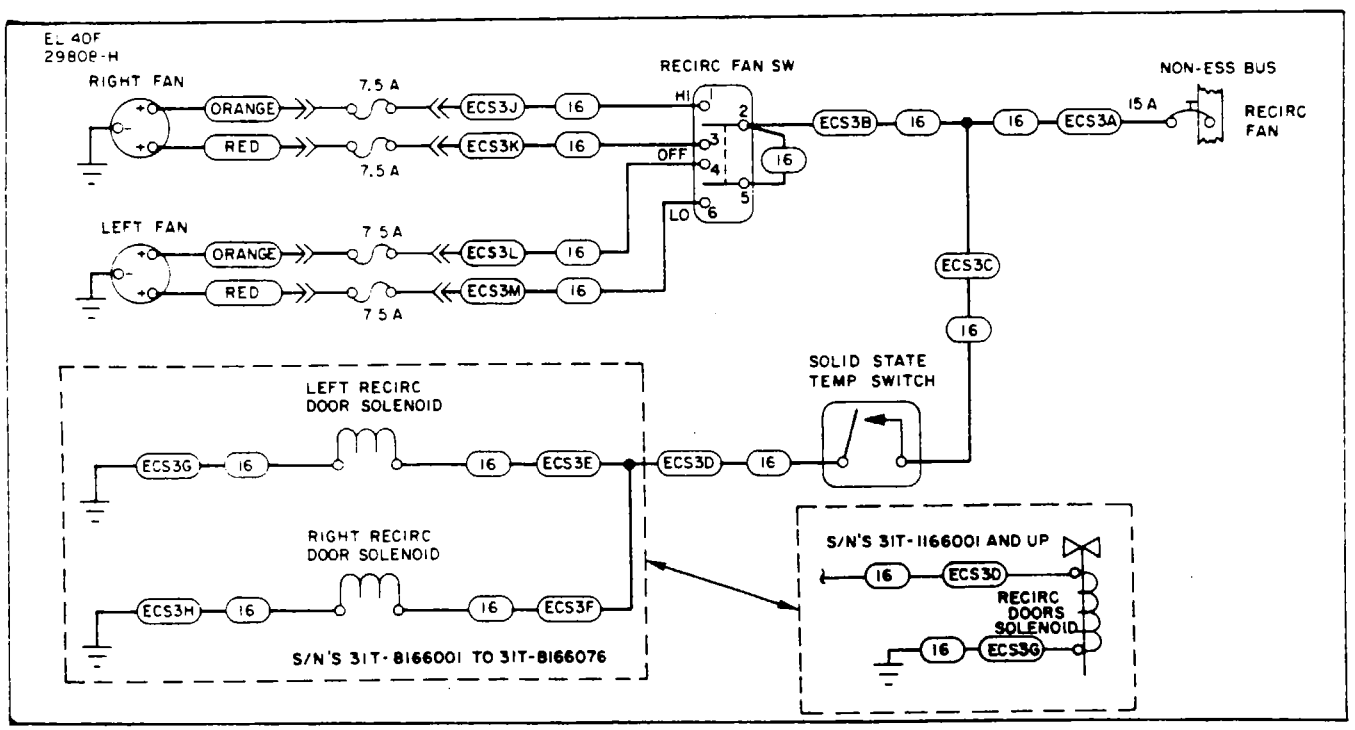

Figure 15A-36 Recirculation Fan

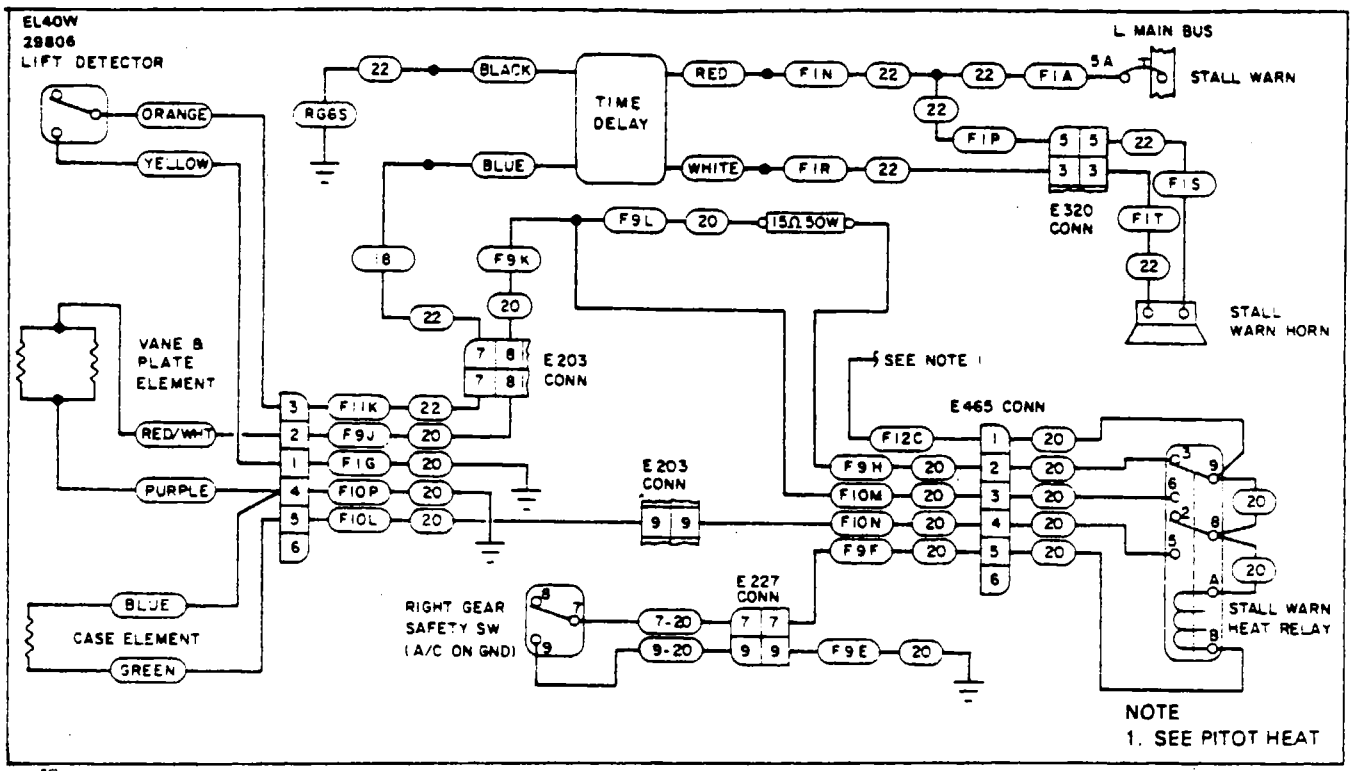

Figure 15A-37 Stall Warning, With Time Delay

INTENTIONALLY LEFT BLANK

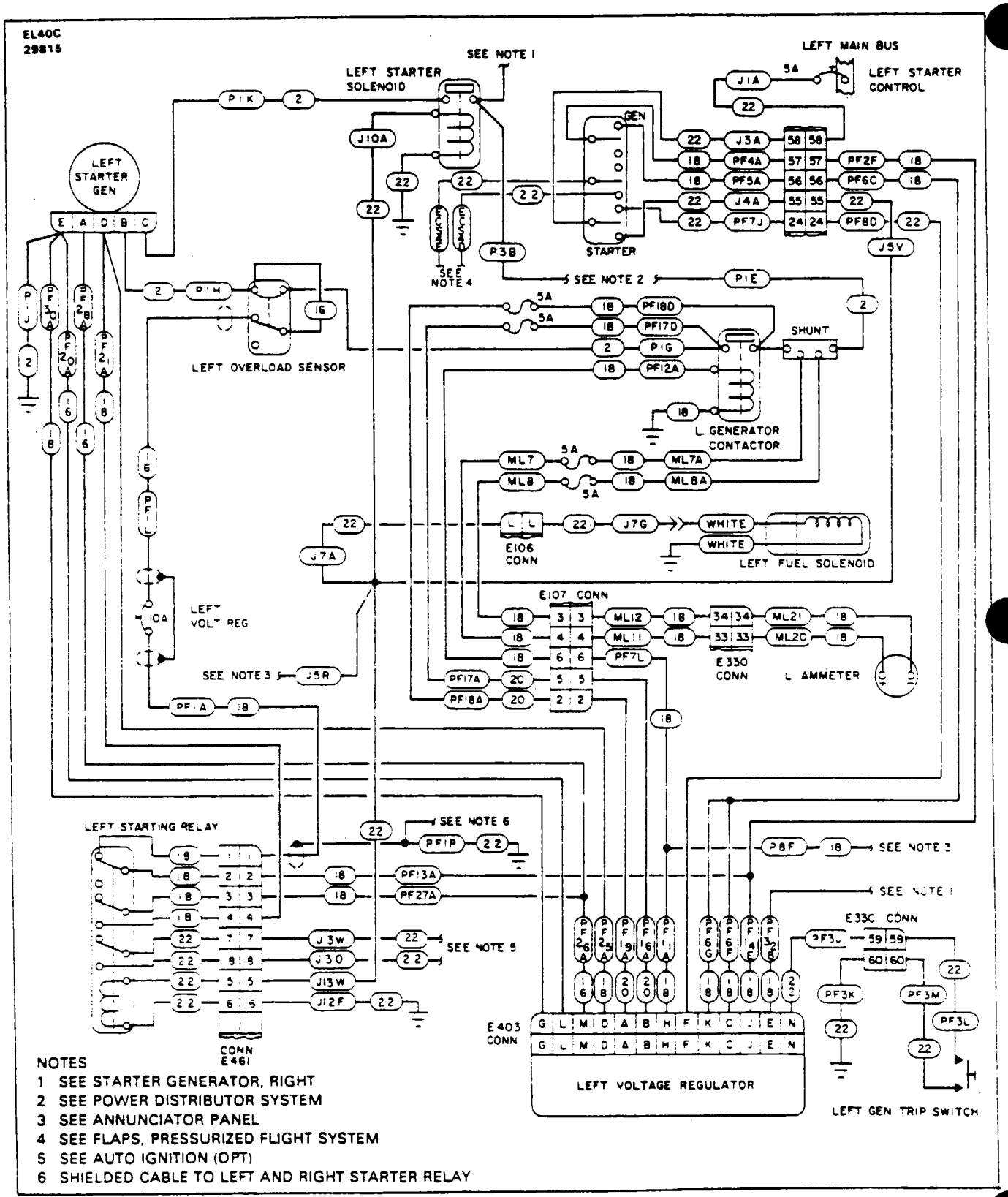

Figure 15A-38. Starter-Generator Left
PA-31T2 S/N's 31T-8166001 to 31T-8166076

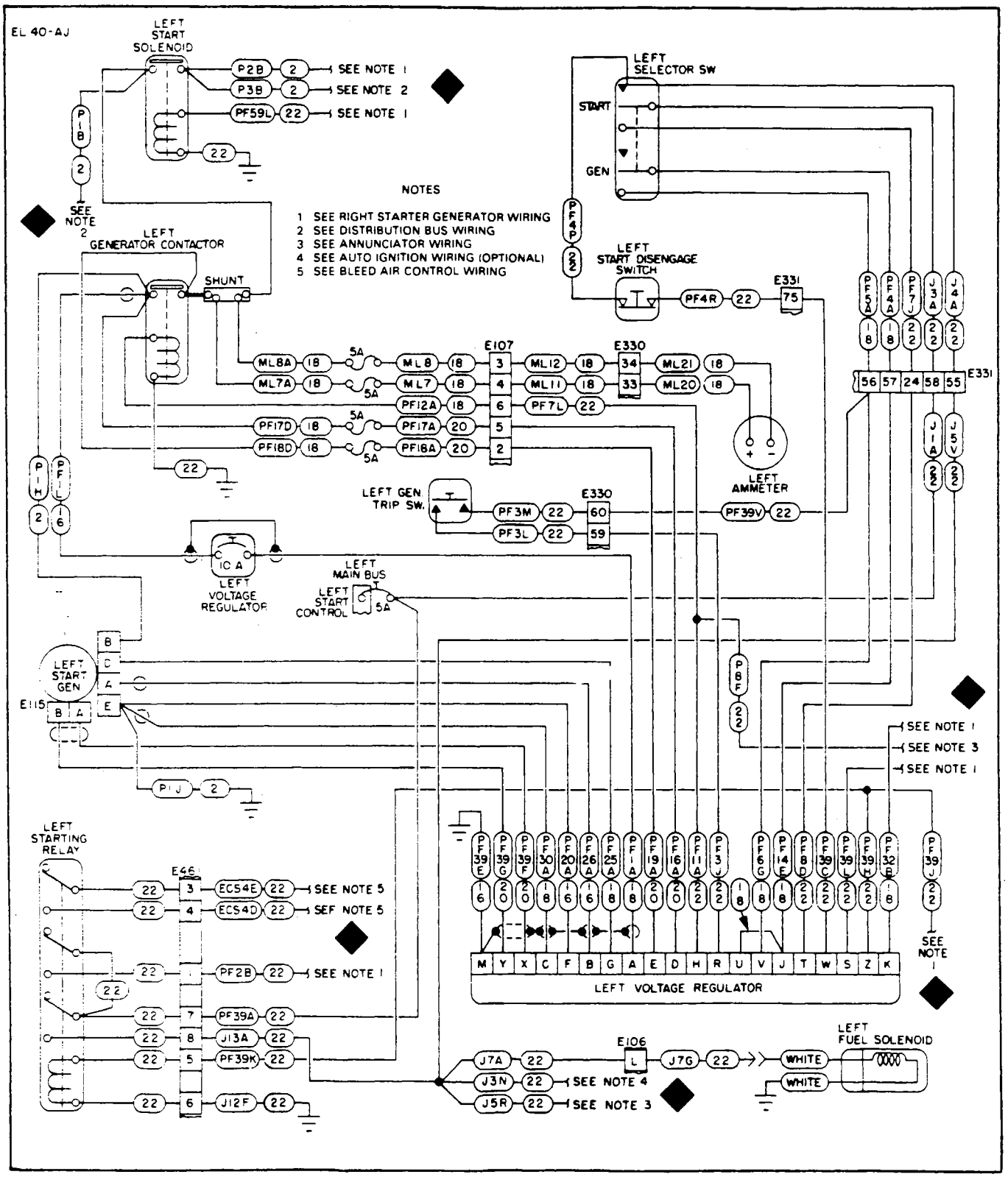

Figure 15A-39. Starter-Generator Left
PA-31T2 S/N 31T-1166001 and up

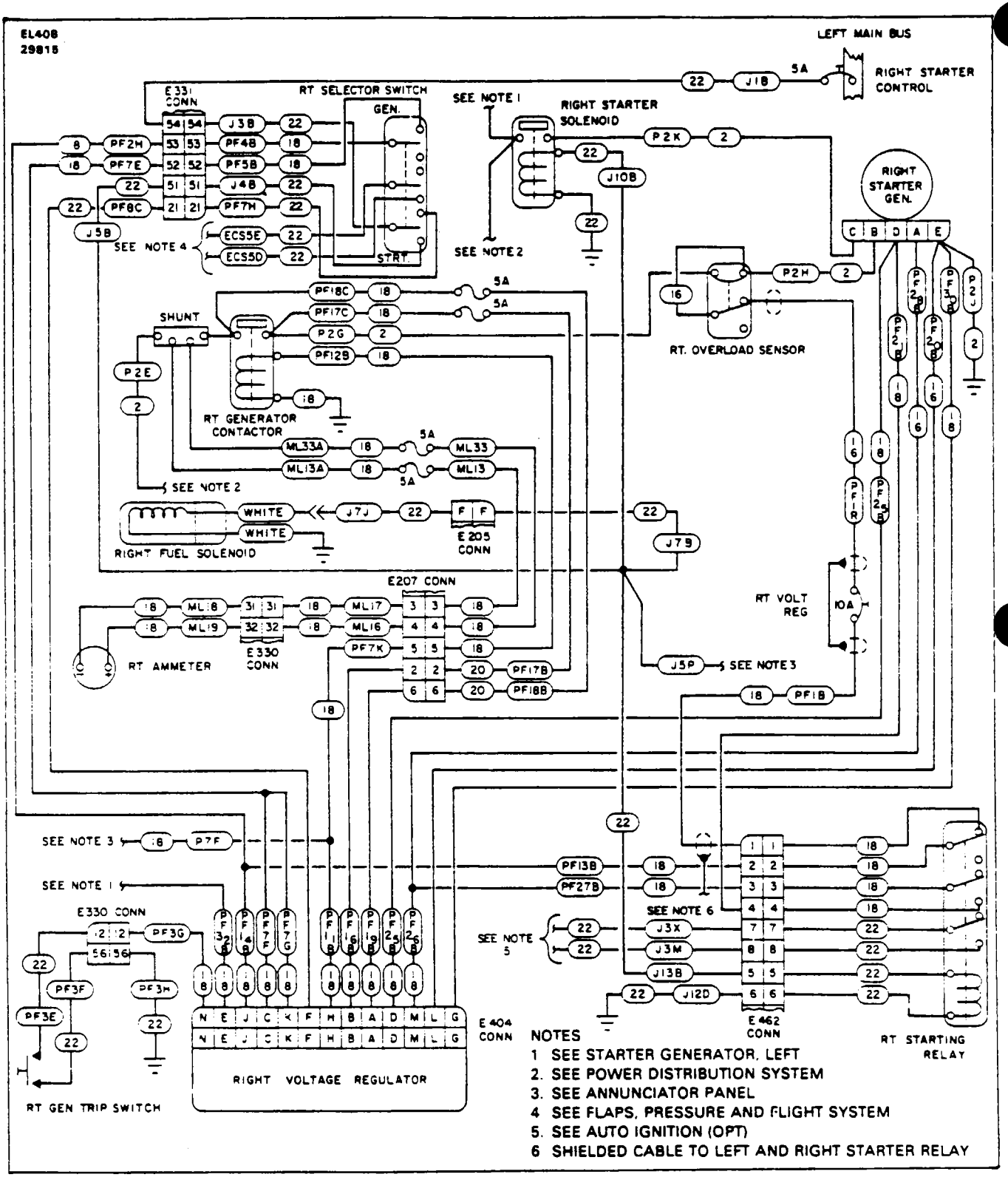

Figure 15A-40. Starter-Generator Right
PA-31T2 S/N 31T-8166001 to 31T-8166076

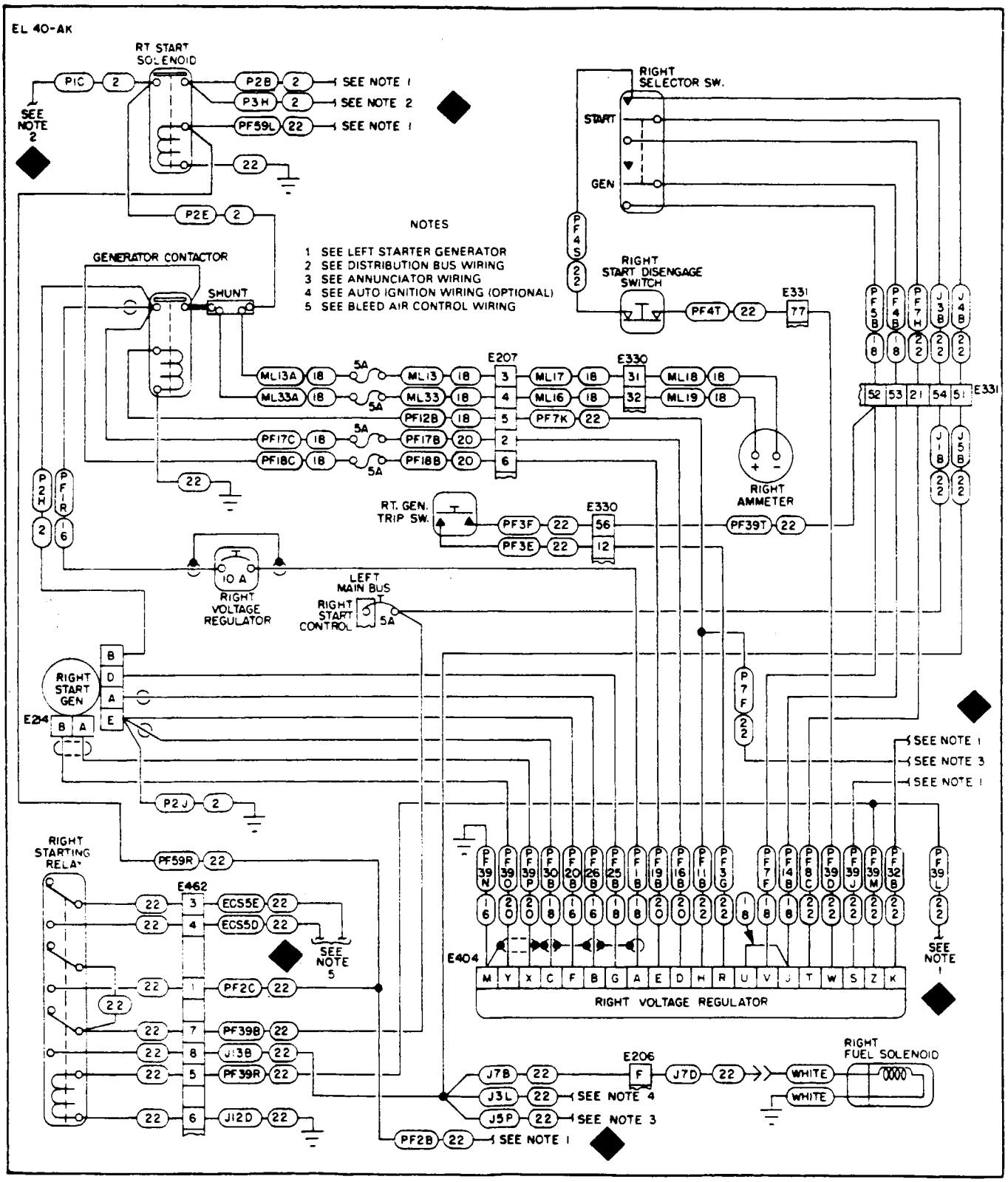

Figure 15A-41. Starter-Generator Right
PA-31T2 S/N 31T-1166001 and up

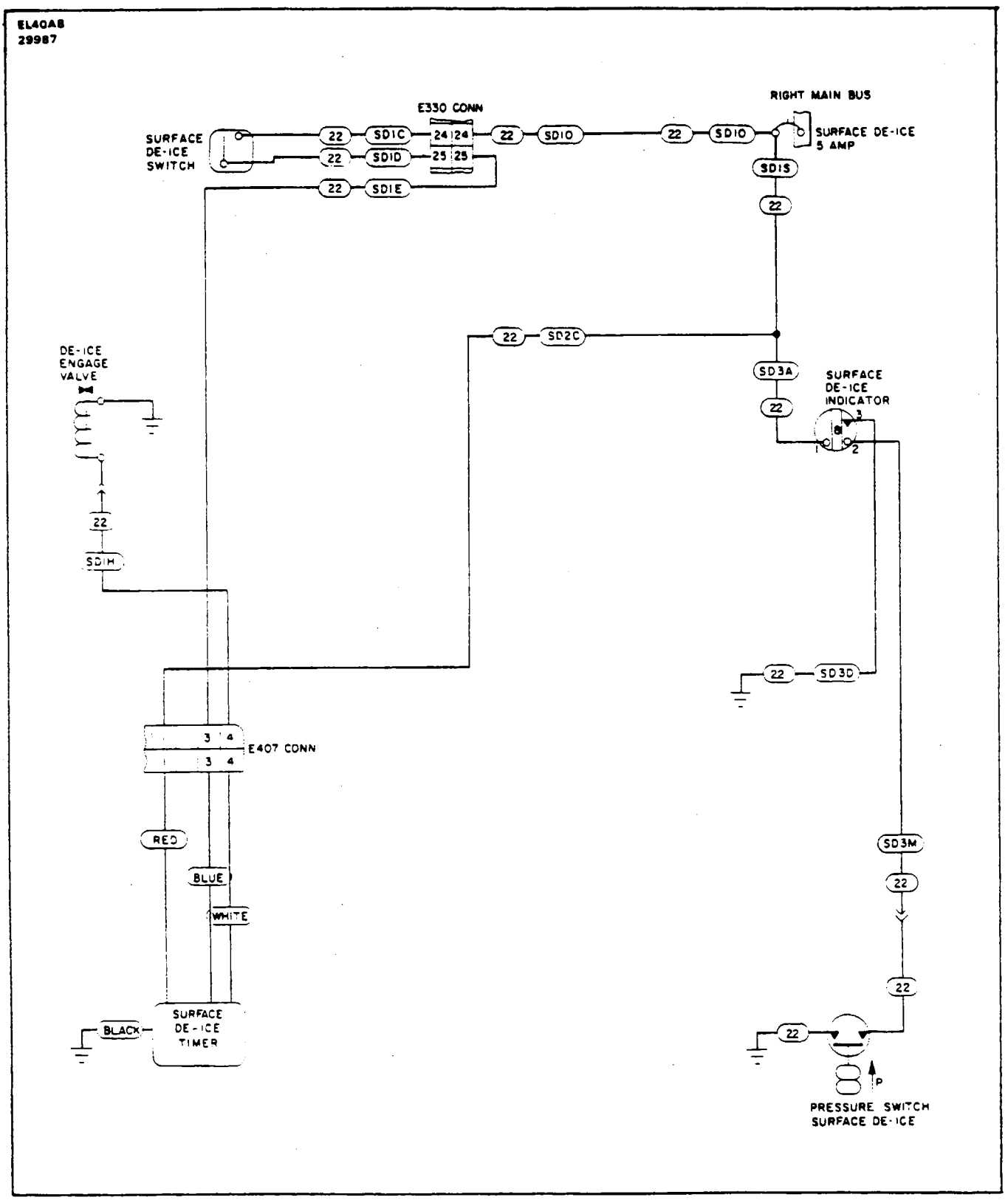

Figure 15A-42. Surface Deice

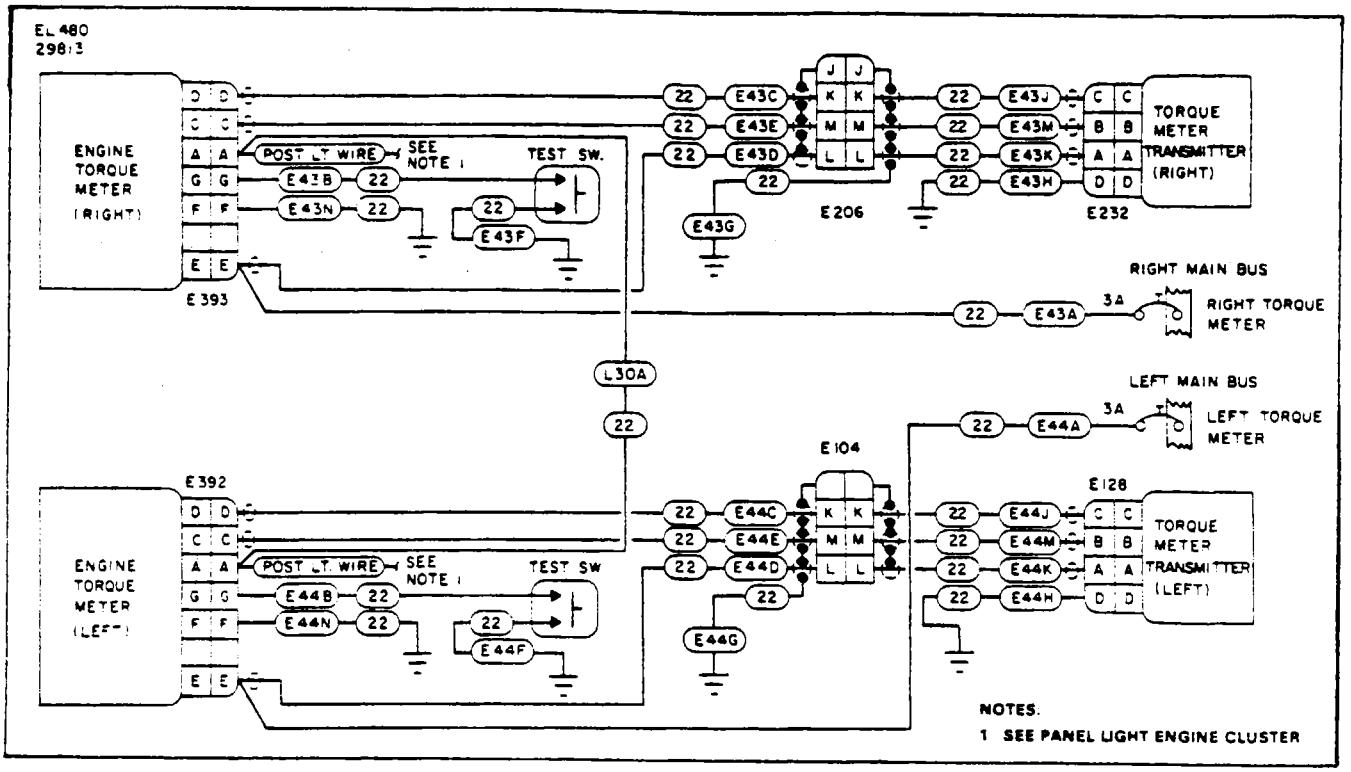

Figure 15A-43 Torque System (Weston Kulite) (Right and Left)
PA-31T2 S/N 31T-8166001 to 8166061

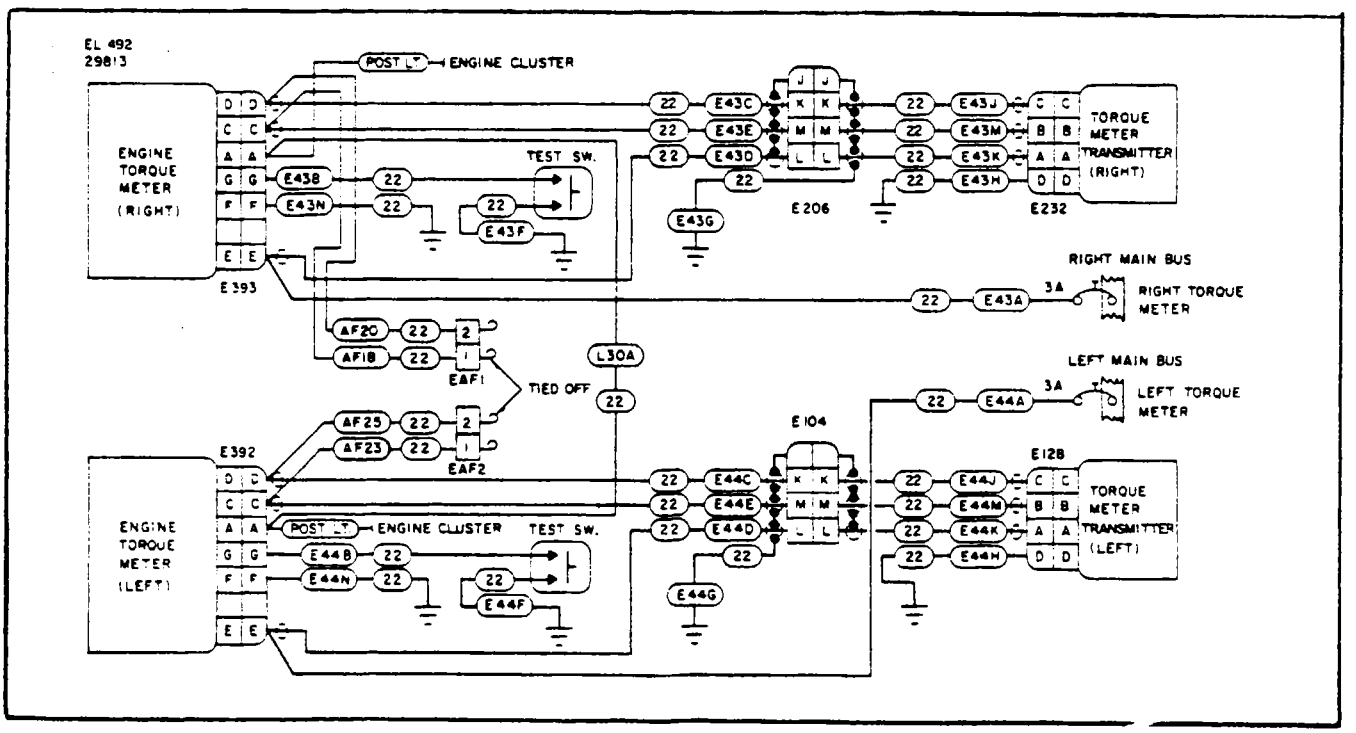

Figure 15A-44. Torque System (Weston Kulite) (Right and Left)
PA-31T2 S/N 31T-8166062 and up

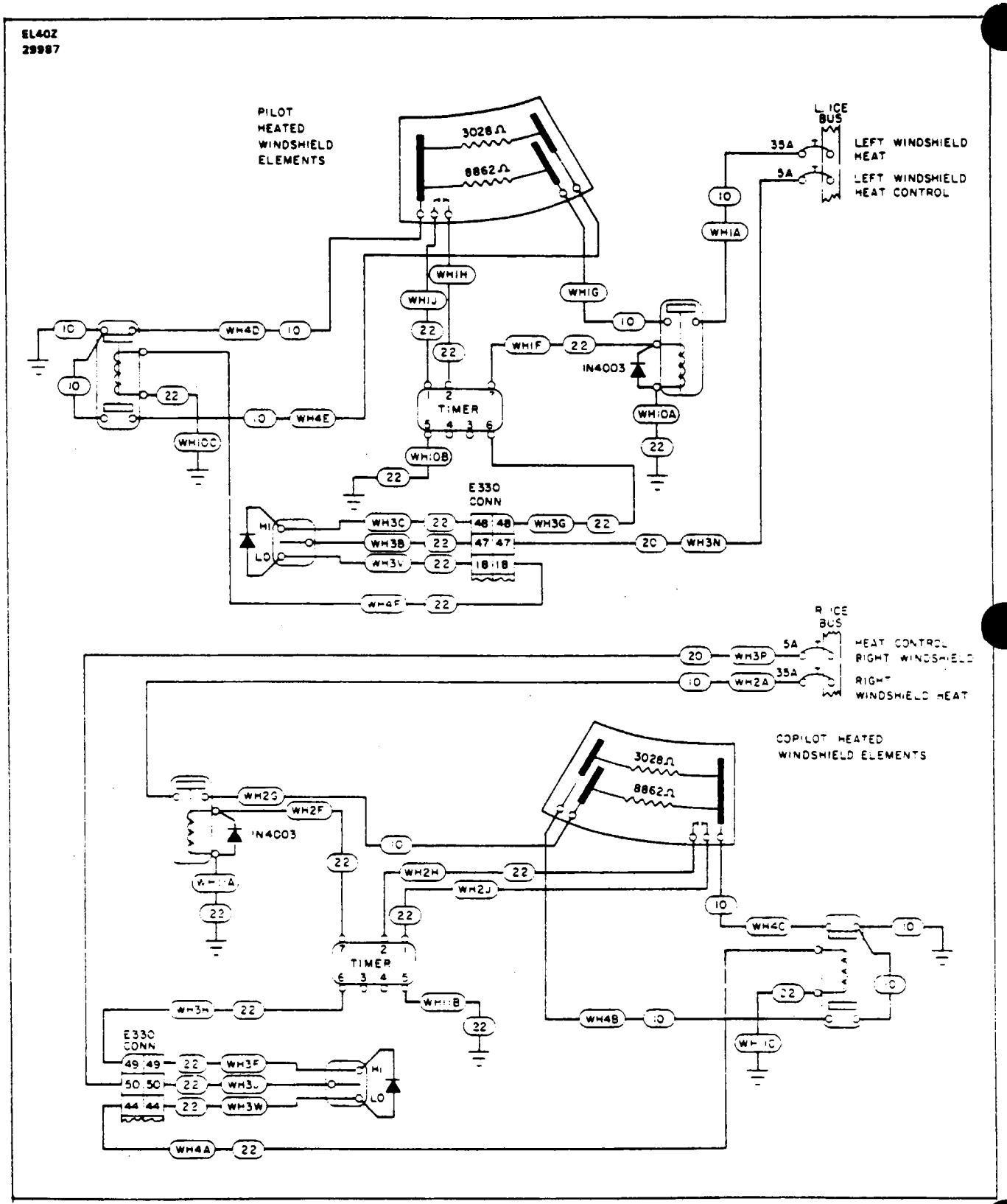

Figure 15A-45. Windshield Heat (Left and Right)

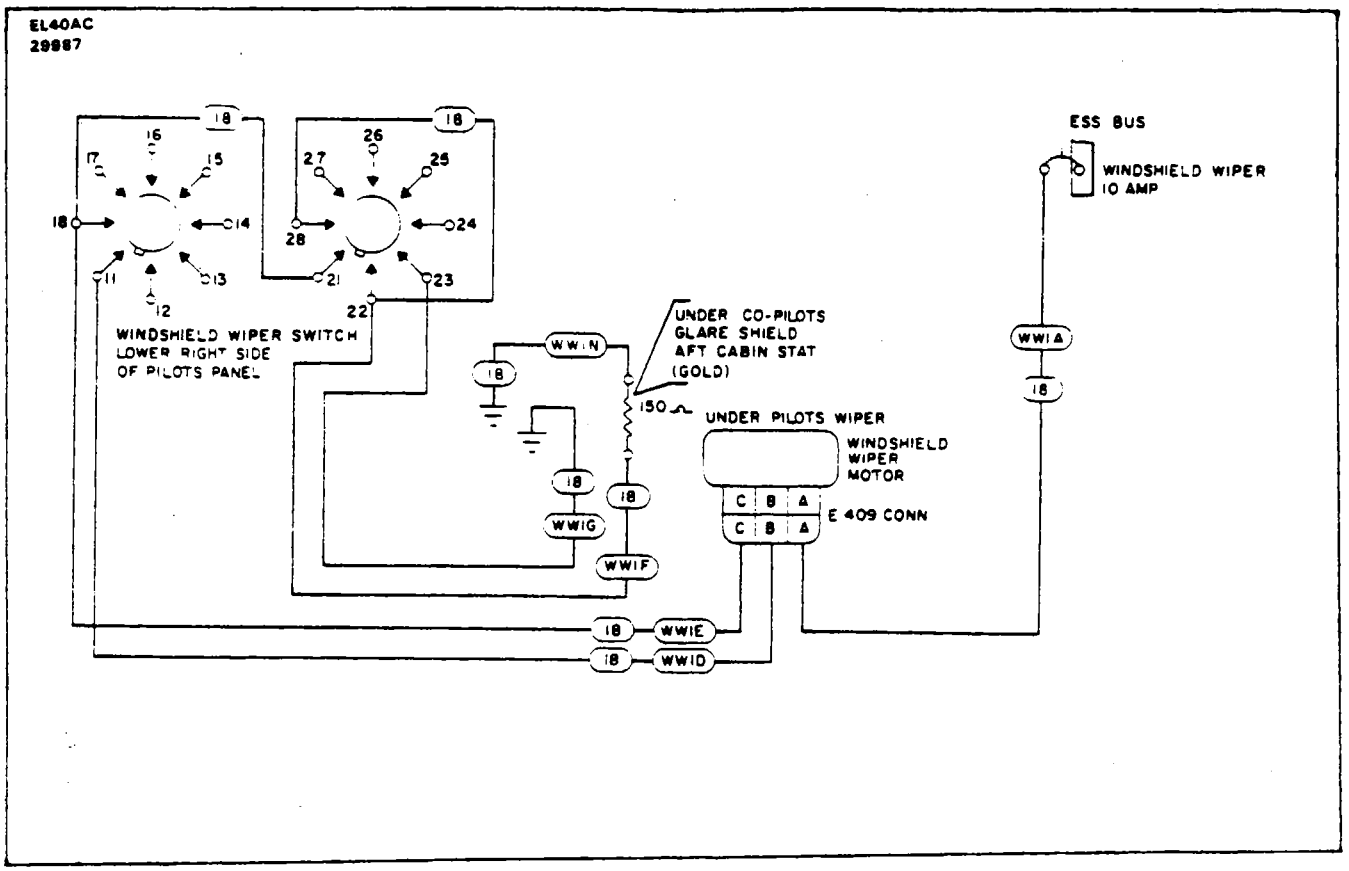

Figure 15A-46. Windshield Wiper

INTENTIONALLY LEFT BLANK

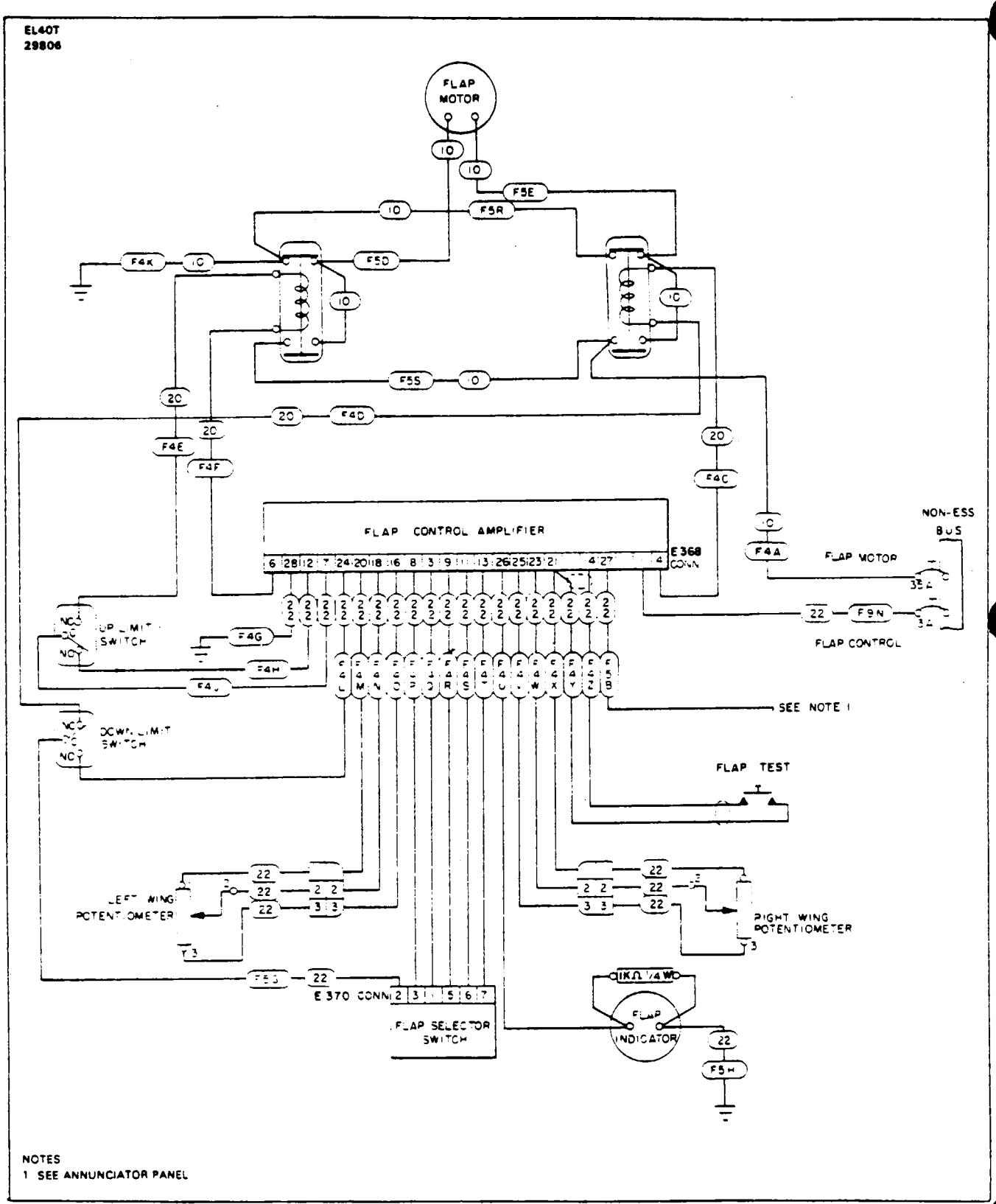

Figure 15A-47 Wing Flap Motor and Control (Calco)

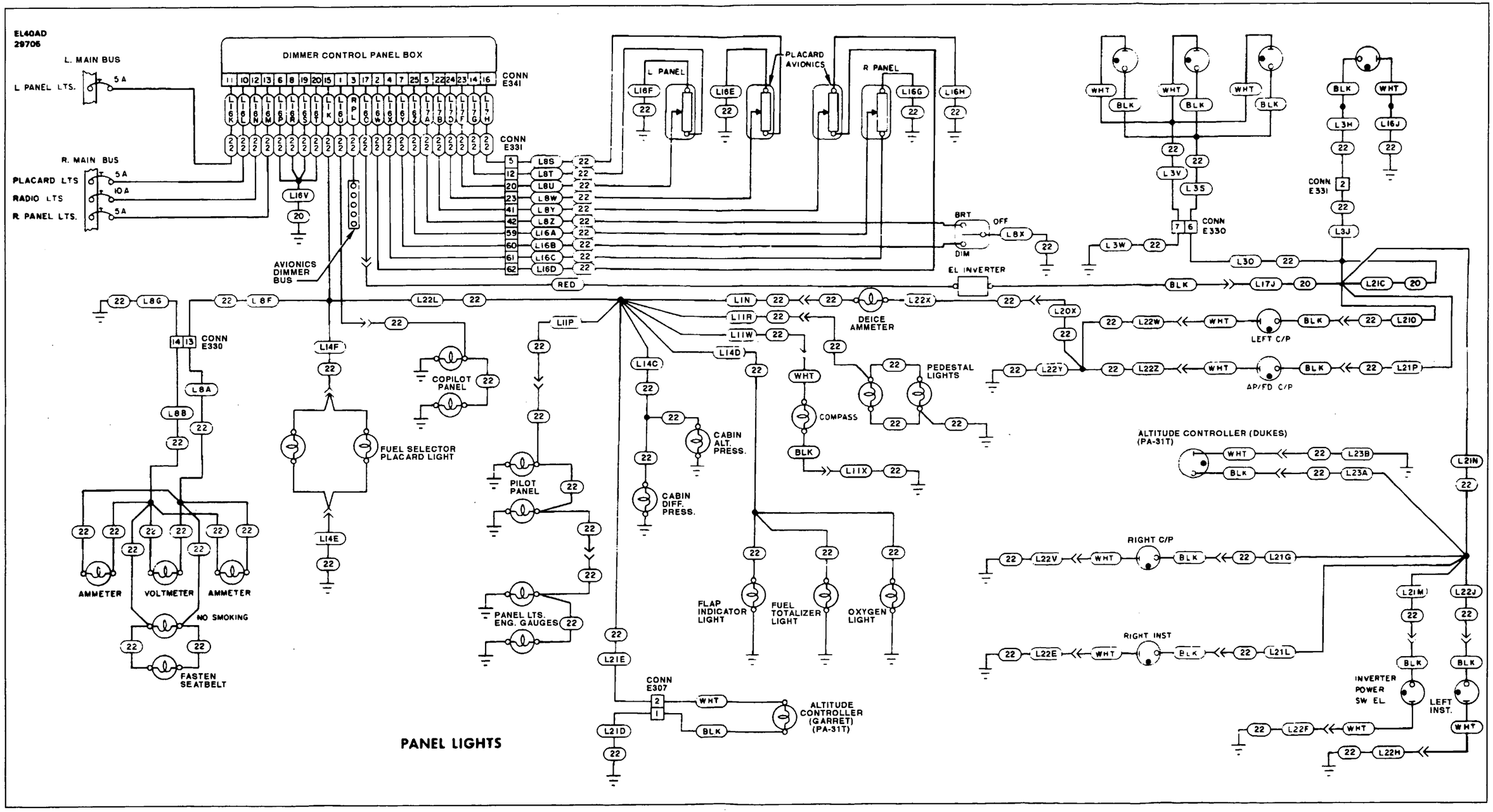

Figure 15A-48. Panel Lights,
PA-31T2 S/N 31T-8166001 to -8166076

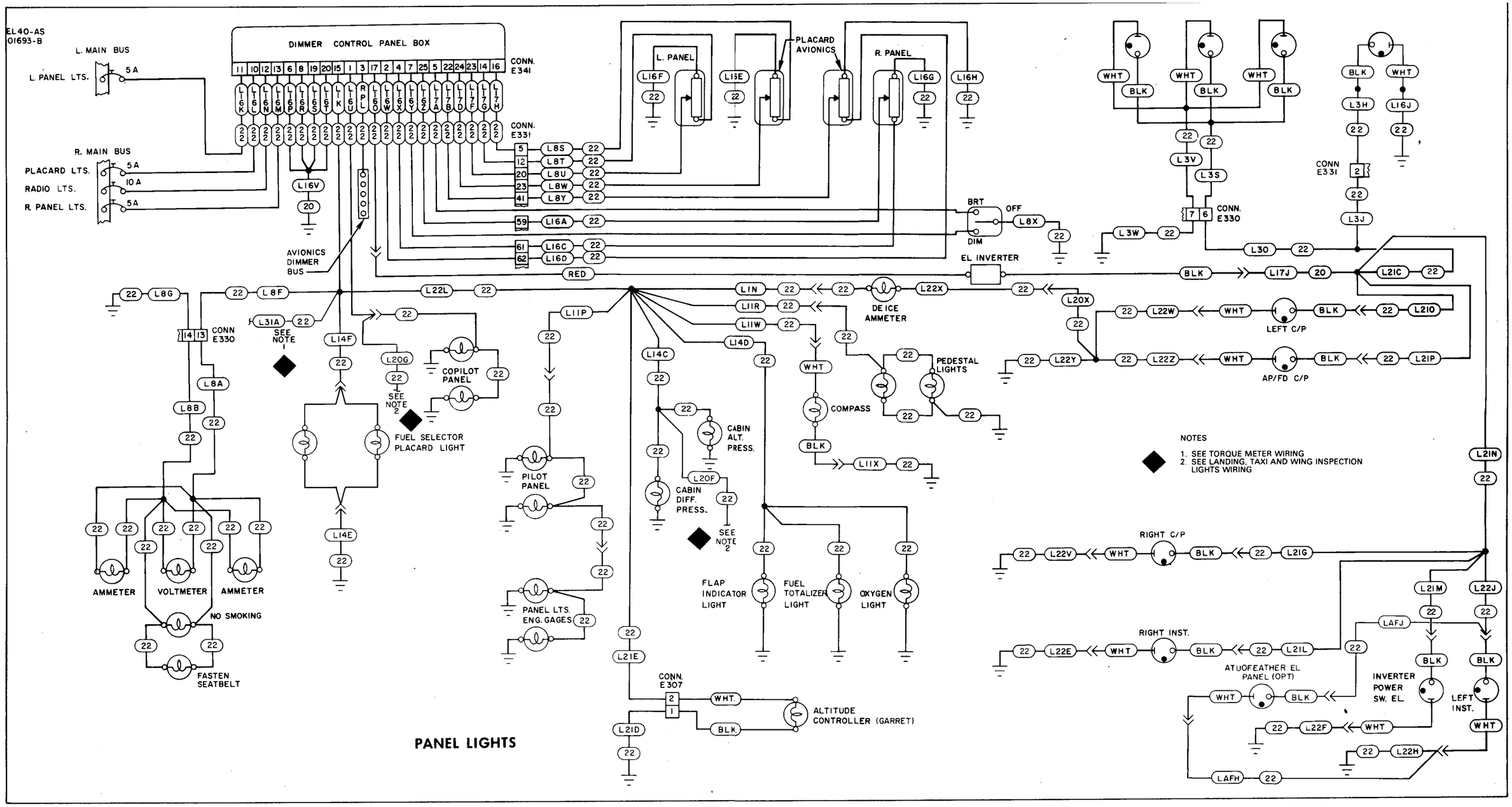

Figure 15-48a. Panel Lights PA-31T2 S/N 31T-1166001and up

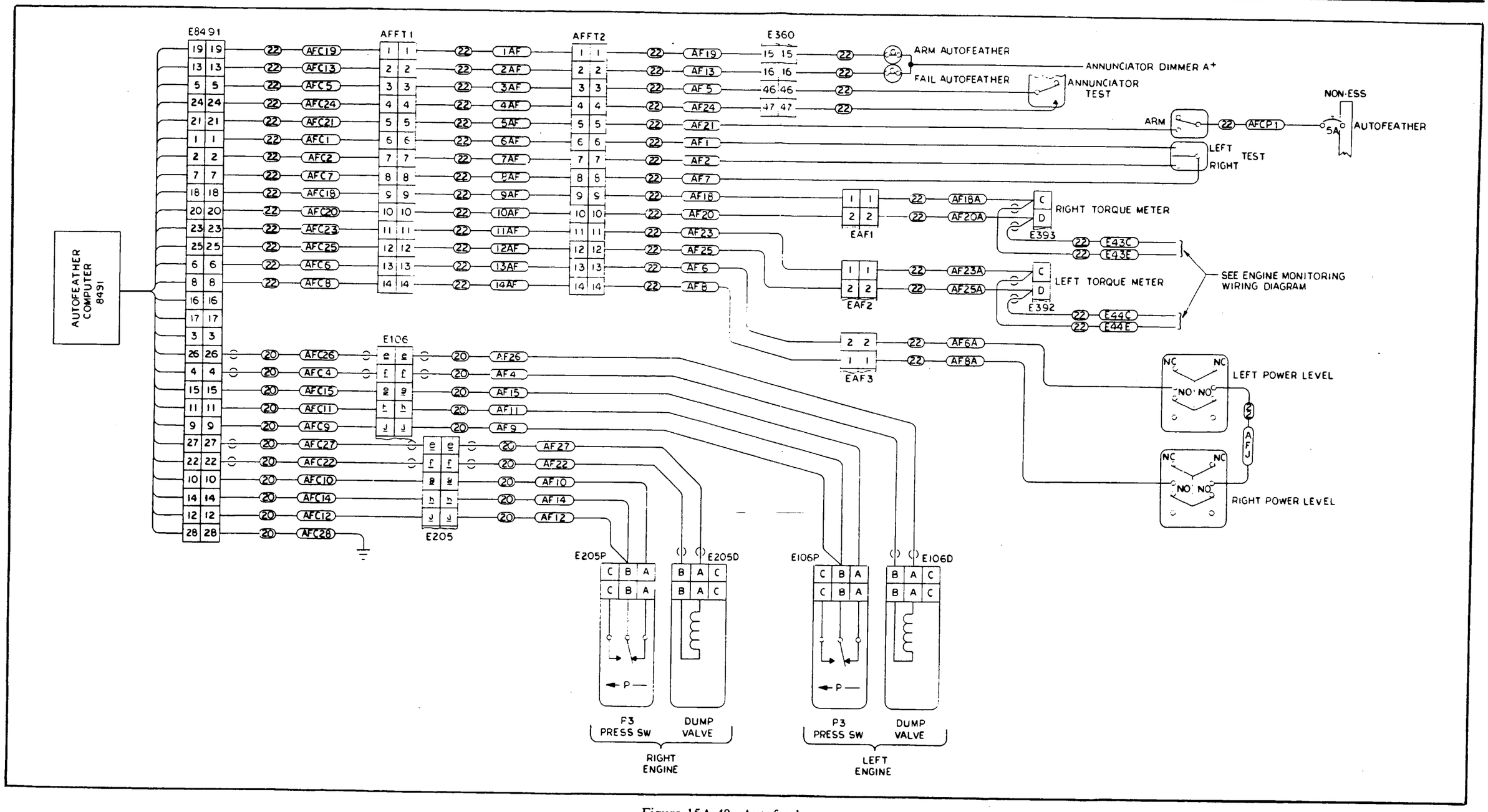

Figure 15A-49. Autofeather

GRIDS 8D5 THRU 8L24
INTENTIONALLY LEFT BLANK