Appendix D Top Connector Interconnect

PMA7000M-S J2 TOP CONNECTOR

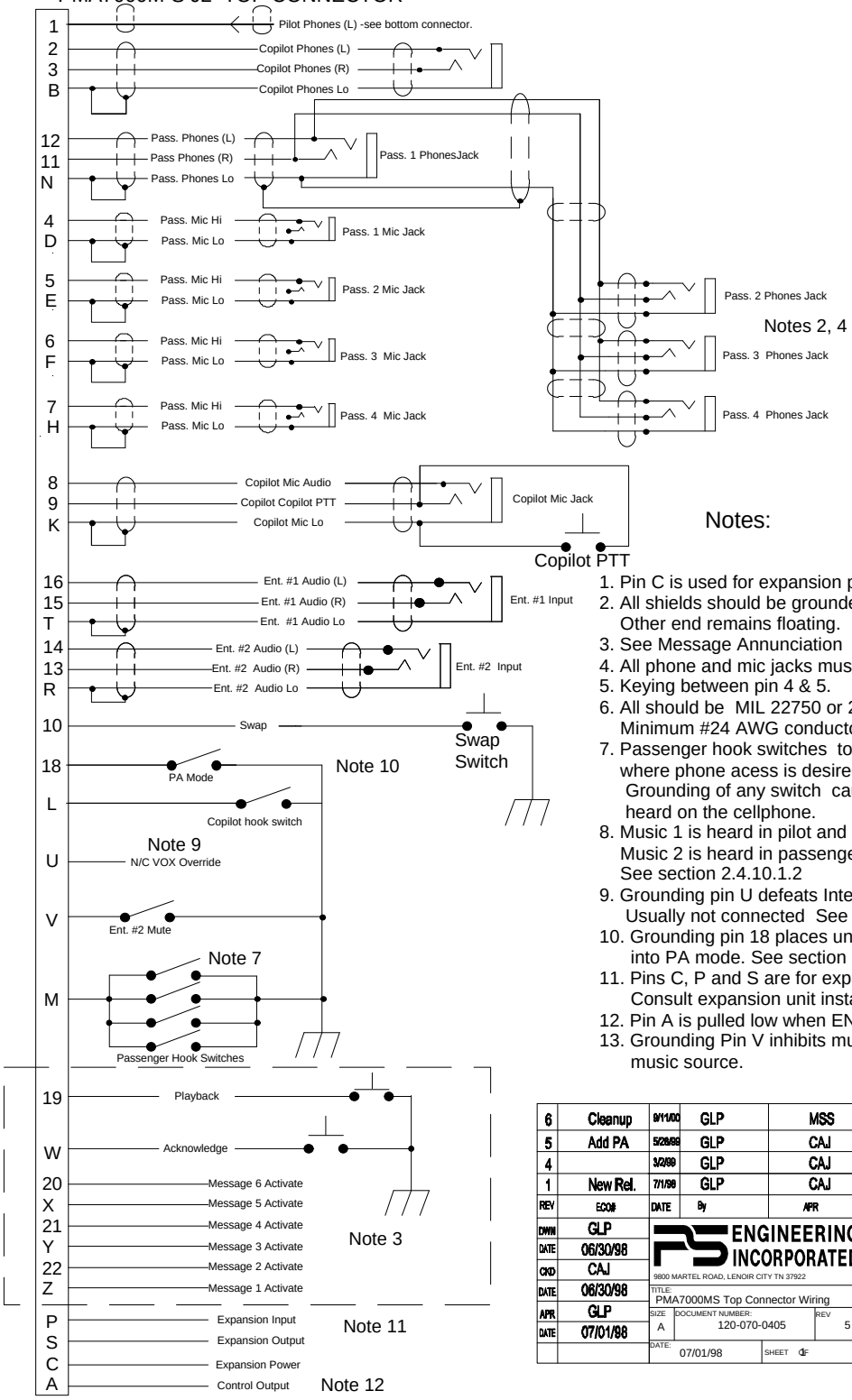

Notes:

1. Pin C is used for expansion power only.
2. All shields should be grounded at audio panel only. Other end remains floating.
3. See Message Annunciation section for more information.
4. All phone and mic jacks must be floating from ground.
5. Keying between pin 4 & 5.
6. All should be MIL 22750 or 27500. Minimum #24 AWG conductors
7. Passenger hook switches to be located at positions where phone acess is desired. Grounding of any switch causes all passengers to be heard on the cellphone.
8. Music 1 is heard in pilot and copilot positions only. Music 2 is heard in passenger positions only. See section 2.4.10.1.2
9. Grounding pin U defeats IntelliVox and opens all microphones. Usually not connected See 2.4.15
10. Grounding pin 18 places units with PA capability into PA mode. See section 2.4.14.
11. Pins C, P and S are for expansion with PS units Consult expansion unit installation manual for details.
12. Pin A is pulled low when ENT/AUX button pushed.
13. Grounding Pin V inhibits muting of passenger music source.

REV	ECO#	DATE	By	APR
6	Cleanup	9/11/00	GLP	MSS
5	Add PA	5/28/99	GLP	CAJ
4		3/2/99	GLP	CAJ
1	New Rel.	7/1/98	GLP	CAJ

DWN	GLP
DATE	06/30/98
CKD	CAJ
DATE	06/30/98
APR	GLP
DATE	07/01/98

PS ENGINEERING® INCORPORATED
9800 MARTEL ROAD, LENOIR CITY TN 37922

TITLE: PMA7000MS Top Connector Wiring

SIZE	DOCUMENT NUMBER:	REV
A	120-070-0405	5

DATE: 07/01/98 SHEET 1 OF 1