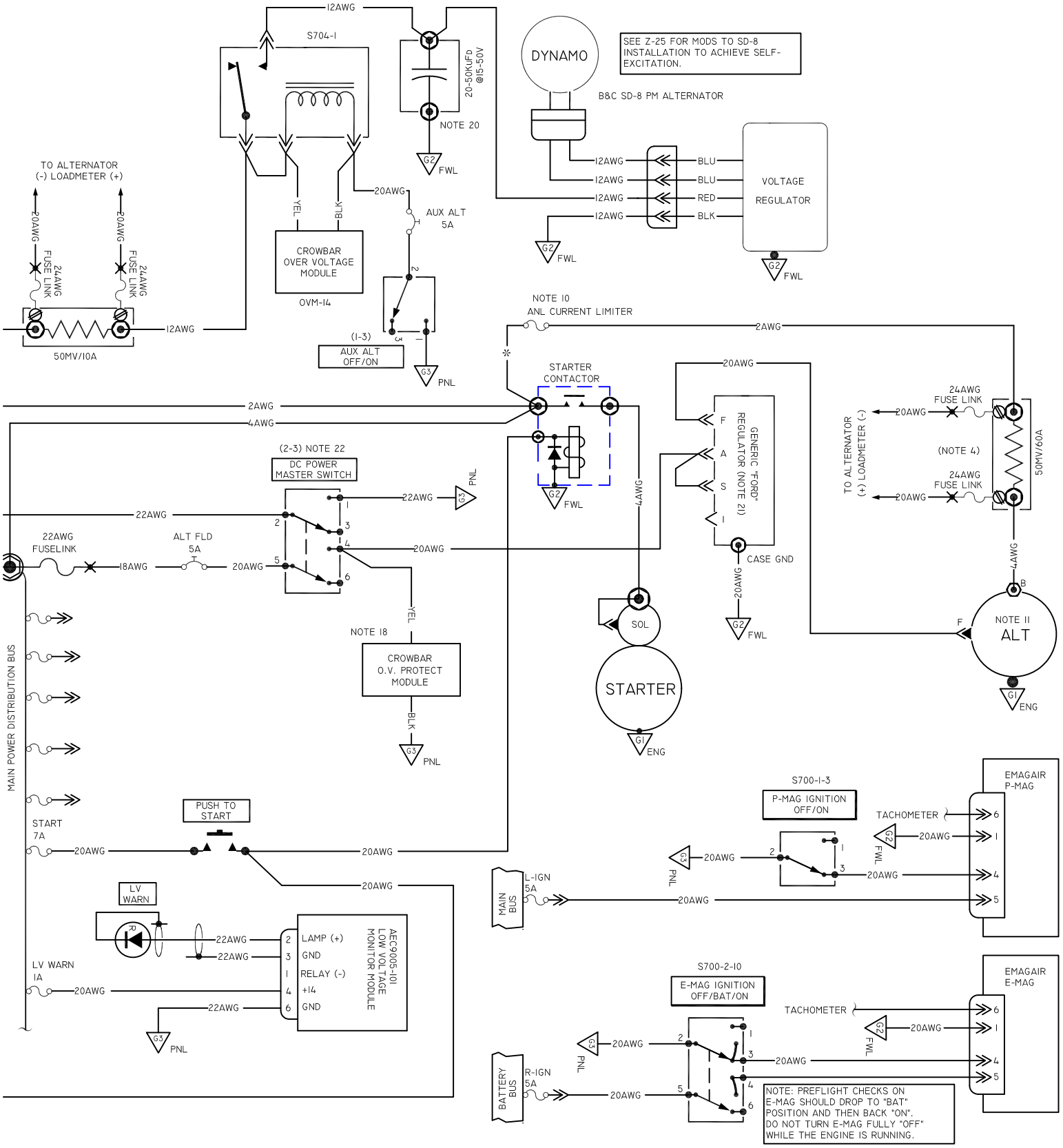
12AWG
S704-1
20-50KuFD @15-50V
NOTE 20
G2 FWL
DYNAMO
SEE Z-25 FOR MODS TO SD-8 INSTALLATION TO ACHIEVE SELF-EXCITATION.
B&C SD-8 PM ALTERNATOR
12AWG BLU
12AWG BLU
12AWG RED
12AWG BLK
VOLTAGE REGULATOR
G2 FWL
TO ALTERNATOR (-) LOADMETER (+)
20AWG
FUSE LINK 24AWG
50MV/10A
YEL
BLK
CROWBAR OVER VOLTAGE MODULE
OVM-14
20AWG
AUX ALT 5A
(1-3) AUX ALT OFF/ON
G3 PNL
NOTE 10
ANL CURRENT LIMITER
2AWG
STARTER CONTACTOR
4AWG
(2-3) NOTE 22
DC POWER MASTER SWITCH
22AWG
22AWG FUSELINK
18AWG
ALT FLD 5A
20AWG
NOTE 18
CROWBAR O.V. PROTECT MODULE
BLK
MAIN POWER DISTRIBUTION BUS
START 7A
PUSH TO START
LV WARN
LV WARN 1A
AEC9005-101 LOW VOLTAGE MONITOR MODULE
LAMP (+)
GND
RELAY (-)
+14
GND
GENERIC "FORD" REGULATOR (NOTE 21)
F
A
S
I
CASE GND
SOL
STARTER
G1 ENG
TO ALTERNATOR (+) LOADMETER (-)
(NOTE 4)
50MV/60A
NOTE 11
ALT
S700-1-3
P-MAG IGNITION OFF/ON
TACHOMETER
EMAGAIR P-MAG
MAIN BUS
L-IGN 5A
S700-2-10
E-MAG IGNITION OFF/BAT/ON
EMAGAIR E-MAG
BATTERY BUS
R-IGN 5A
NOTE: PREFLIGHT CHECKS ON E-MAG SHOULD DROP TO "BAT" POSITION AND THEN BACK "ON". DO NOT TURN E-MAG FULLY "OFF" WHILE THE ENGINE IS RUNNING.